BIDDING DOCUMENT
FOR
THE PROCUREMENT OF

Upgrading of Tribhuvan Rajpath from Ghantaghar to Gandak Chowk Road, Parsa (Chainage Km 04+000 to Km 08+054)

National Competitive Bidding (NCB)

Single-Stage: Two-Envelope Bidding Procedure

Road Division Hetauda

Issued on: October 16, 2026 (2083/06/30)

Invitation for Bids No.: 07/2083/084

Contract Identification No.: TRP/RDHTD/33701130/083/84-27

BIDDING DOCUMENT

for

THE PROCUREMENT OF

Upgrading of Tribhuvan Rajpath from Ghantaghar to Gandak Chowk Road, Parsa (Chainage Km 04+000 to Km 08+054)

National Competitive Bidding (NCB)

Single-Stage: Two-Envelope Bidding Procedure

Road Division Hetauda

Issued on: October 16, 2026 (2083/06/30)

Invitation for Bids No.: 07/2083/084

NCB No. :

Contract Identification No.: TRP/RDHTD/33701130/083/84-27

Abbreviations

BD ..... Bidding Document

BDF ..... Bidding Forms

BDS ..... Bid Data Sheet

BOQ ..... Bill of Quantities

COF ..... Contract Forms

DP ..... Development Partners

DoLI ..... Department of Local Infrastructure

e-GP ..... Electronic Government Procurement

ELI ..... Eligibility

EQC ..... Evaluation and Qualification Criteria

EXP ..... Experience

FIN ..... Financial

GCC ..... General Conditions of Contract

GoN[1] ..... Government of Nepal

ICC ..... International Chamber of Commerce

IFB ..... Invitation for Bids

ITB ..... Instructions to Bidders

JV ..... Joint Venture

LIT ..... Litigation

NCB ..... National Competitive Bidding

NRs. ..... Nepalese Rupees

PAN ..... Permanent Account Number

PPA ..... Public Procurement Act

PPMO ..... Public Procurement Monitoring Office

PPR ..... Public Procurement Regulations

PL ..... Profit & Loss

PS..... .....Provisional Sum

SBD ..... Standard Bidding Document

SCC ..... Special Conditions of Contract

TS ..... Technical Specifications

VAT ..... Value Added Tax

WRQ ..... Works Requirements

[1] "GoN" word indicates all public entities according to Public Procurement Act, 2063

Table of Contents

Invitation for Bids 4

Part I: BIDDING PROCEDURES 6

Section I: Instructions to Bidders 9

Section II : Bid Data Sheet 33

Section III: Evaluation and Qualification Criteria 37

Section IV: Bidding Forms 47

Section V - Eligible Countries 74

Part II : REQUIREMENT 75

Section VI: Works Requirements 77

Section VI: Bill of Quantities 112

Part III: CONDITIONS OF CONTRACT AND CONTRACT FORMS 102

Section VIII: General Conditions of Contract 106

Section IX: Special Conditions of Contract ..... **Error! Bookmark not defined.**

Section X: Contract Forms 143

Invitation for Bids

Government of Nepal (GoN)

Ministry of Infrastructure Development

Department Of Roads

Federal Road Supervision and Monitoring Office

Road Division Hetauda

Invitation for Bids No: 07/2083/084

Date of publication: October 16, 2026 (2083/06/30)

1. ***Road Division Hetauda*** ***has allocated funds*** from ***GoN*** towards the cost of ***Upgrading of Tribhuvan Rajpath from Ghantaghar to Gandak Chowk Road, Parsa (Chainage Km 04+000 to Km 08+054))*** and intends to apply part of the funds to cover eligible payments under the Contract ***for TRP/RDHTD/33701130/083/84-27***. Bidding is open to all eligible as per Section V of bidding document.
2. ***Road Division Hetauda*** invites sealed bids from eligible bidders for the construction of ***Upgrading of Tribhuvan Rajpath from Ghantaghar to Gandak Chowk Road, Parsa (Chainage 04+000 to 08+054)*** under National Competitive Bidding – Single Stage Two Envelope Bidding procedures.

   Only eligible bidders with the following key qualifications should participate in this bidding:

   - Minimum Average Annual Construction Turnover of the best 3 years within the last 10 years: ***NRs 1180.00 million.***
   - Minimum Work experience of similar size and nature: ***NRs 1180.00 million***
3. Under the Single Stage, Two Envelope Procedure, Bidders are required to submit simultaneously two separate sealed envelopes, one containing (i) the Technical Bid and the other (ii) the Price Bid, both in turn enclosed in one sealed envelope as per the provision of ITB 21 of the Bidding Document.

4. Eligible Bidders may obtain further information and inspect the Bidding Documents at the office of ***Road Division Hetauda, Hetauda-10, Makwanpur, 057-520311, roaddivisionhetauda@gmail.com and website dor.gov.np/hetauda***
5. A complete set of Bidding Documents shall be purchased from the office ***Road Division Hetauda, Hetauda-10, Makwanpur*** by eligible Bidders on the submission of a written application, along with the *copy of company/firm registration certificate*, and upon payment of a non-refundable fee of ***NRs 20000*** till ***November 05, 2026 during office hours*** in the account as specified below.

   Information to deposit the cost of bidding document in Bank:

   Name of the Bank: **Nepal Bank Limited, City Office, Hetauda**
   Name of Office: **District Treasury Controller Office (Ko.Le.Ni.Ka.) Hetauda, Makwanpur**
   Office Code no. : **337013201**, Account no.: **00101000000001001001**
   Rajaswa (revenue) Shirshak no. : **14229**

6. Pre-bid meeting shall be held at ***Road Division Hetauda*** at ***October 26, 2026, 11:00 hours.***

7. Sealed bids must be submitted to the office ***Road Division Hetauda, Hetauda-10, Makwanpur*** by hand/courier before ***12:00 hours*** on ***November 06, 2026.*** Bids received after this deadline will be rejected.

8. The bids will be opened in the presence of Bidders' representatives who choose to attend at ***November 06, 2026 , 13:00 hours*** at the office of ***Road Division Hetauda, Hetauda-10, Makwanpur***. Bids must be valid for a period of ***120 days*** *from* the bid submission deadline and must be accompanied by a bid security, amounting to a minimum of **NRs 55.00 million**, which shall be valid for 30 days beyond the validity period of the bid.

9. If the last date of purchasing and /or submission falls on a government holiday, then the next working day shall be considered as the last date. In such case the validity period of the bid and bid security shall remain the same as specified for the original last date of bid submission.

Part I: BIDDING PROCEDURES

Section I: Instructions to Bidders (ITB)

This section specifies the procedures to be followed by Bidders in the preparation and submission of their Bids. Information is also provided on the submission, opening, and evaluation of bids and on the award of contract.

Table of Clauses

A. General 9

1. Scope of Bid 9
2. Source of Funds 9
3. Fraud and Corruption 9
4. Eligible Bidders 11
5. Eligible Materials, Equipment and Services 13

B. Contents of Bidding Documents 14

6. Sections of Bidding Document 14
7. Clarification of Bidding Document, Site Visit, Pre-Bid Meeting 14
8. Amendment of Bidding Document 15
9. Cost of Bidding 15
10. Language of Bid 15
11. Documents Comprising the Bid 15
12. Letter of Bid and Schedules 16
13. Alternative Bids 16
14. Bid Prices and Discounts 17
15. Currency of Bid and Payment 17
16. Documents Comprising the Technical Proposal 17
17. Documents Establishing the Qualifications of the Bidder 18
18. Period of Validity of Bids 18
19. Bid Security 18
20. Format and Signing of Bid 19

D. Submission and Opening of Bids 20

21. Sealing and Marking of Bids 20
22. Deadline for Submission of Bids 22
23. Late Bids 22
24. Withdrawal, and Modification of Bids 22

25. Bid Opening 24
E. Evaluation and Comparison of Bids 25
26. Confidentiality 25
27. Clarification of Bids 25
28. Deviations, Reservations, and Omissions 26
29. Examination of Technical Bid 26
30. Determination of Responsiveness of Technical Bid 26
31. Non-conformities Errors, and Omissions 27
32 Eligibility and Qualification of the Bidder 27
33. Correction of Arithmetical Errors 27
34 Subcontractors 28
35. Evaluation of Price Bids 28
36. Comparison of Bids 29
37. Employer's Right to Accept Any Bid, and to Reject Any or All Bids 30
38. Award Criteria 30
39. Letter of Intent to Award the Contract/Notification of Award 30
40. Performance Security 30
41 Signing of Contract 31
42. Complaint and Review 31

Section I: Instructions to Bidders

A. General	
1. Scope of Bid	1.1 In connection with the Invitation for Bids **indicated in the Bid Data Sheet (BDS)**, the Employer, **as indicated in the BDS**, issues this Bidding Document for the procurement of Works as specified in Section VI (Works Requirements). The name, identification, and number of lots (contracts) / multiple contracts of the National Competitive Bidding (NCB) are **provided in the BDS.**
	1.2 Throughout this Bidding Document: (a) the term "in writing" means communicated in written form and delivered against receipt through e-GP system or email or fax or courier; (b) except where the context requires otherwise, words indicating the singular also include the plural and words indicating the plural also include the singular; and (c) "day" means calendar day.
2. Source of Funds	2.1 GoN Funded: In accordance with its annual program and budget, approved by the GoN, the implementing agency **indicated in the BDS** plans to apply a portion of the allocated budget to eligible payments under the contract(s) for which this Bidding Document is issued. Or Public Entities' own Resource Funded: In accordance with its annual program and budget, approved by the public entity, the implementing agency **indicated in the BDS** plans to apply a portion of the allocated budget to eligible payments under the contract(s) for which this Bidding Document is issued. Or DP Funded: The GoN has applied for or received financing (hereinafter called "funds") from the Development Partner (hereinafter called "the DP") **indicated in the BDS** toward the cost of the project named in the BDS. The GoN intends to apply a portion of the funds to eligible payments under the contract(s) for which this Bidding Document is issued.
	2.2 DP Funded: Payment by the DP will be made only at the request of the GoN and upon approval by the DP in accordance with the terms and conditions of the financing agreement between the GoN and the DP (hereinafter called the "Loan/Grant Agreement"), and will be subject in all respects to the terms and conditions of that Loan/Grant Agreement. No party other than the GoN shall derive any rights from the Loan Agreement or have any claim to the funds.
3. Fraud and Corruption	3.1 Procuring Entities as well as Bidders, suppliers and contractors and their sub-contractors shall adhere to the highest standard of ethics during the procurement and execution of such contracts. In pursuance of this; (a) the Employer adopts, for the purposes of this provision, the terms as defined below: (i) "corrupt practice" means the offering, giving, receiving, or soliciting, directly or indirectly, anything of value to influence improperly the actions of another party;

(ii) "fraudulent practice" means any act or omission, including a misrepresentation, that knowingly or recklessly misleads, or attempts to mislead, a party to obtain a financial or other benefit or to avoid an obligation;

(iii) "coercive practice" means impairing or harming, or threatening to impair or harm, directly or indirectly, any party or the property of the party to influence improperly the actions of a party;

(iv) "collusive practice" means an arrangement between two or more parties designed to achieve an improper purpose, including influencing improperly the actions of another party.

v) "obstructive practice" means (a) deliberately destroying, falsifying, altering, or concealing of evidence material to an investigation; (b) making false statements to investigators in order to materially impede an investigation; (c) failing to comply with requests to provide information, documents, or records in connection with an investigation; (d) threatening, harassing, or intimidating any party to prevent it from disclosing its knowledge of matters relevant to the investigation or from pursuing the investigation; or (e) materially impeding GoN/DP's contractual rights of audit or access to information; and

vi) "integrity violation" is any act which violates Anticorruption Policy, including (i) to (v) above and the following: abuse, conflict of interest, violations of GoN/DP sanctions, retaliation against whistleblowers or witnesses, and other violations of Anticorruption Policy, including failure to adhere to the highest ethical standard.

(b) the Employer will reject a proposal for award if it determines that the Bidder recommended for award has, directly or through an agent, engaged in corrupt, fraudulent, collusive, coercive, or obstructive practices or other integrity violations in competing for the contract;

(c) DP will cancel the portion of the financing allocated to a contract if it determines at any time that representative(s) of the GoN/or of a beneficiary of DP-financing engaged in corrupt, fraudulent, collusive, or coercive practices or other integrity violations during the procurement or the execution of that contract, without the GoN having taken timely and appropriate action satisfactory to DP to remedy the situation.

d) DP will impose remedial actions on a firm or an individual, at any time, in accordance with DP's Anticorruption Policy and related Guidelines (as amended from time to time), including declaring ineligible, either indefinitely or for a stated period of time, to participate in DP-financed, -administered, or -supported activities or to benefit from an DP-financed, -administered, or -supported contract, financially or otherwise, if it at any time determines that the firm or individual has, directly or through an agent, engaged in corrupt, fraudulent, collusive, coercive, or obstructive practices or other integrity violations; and

(e) The Contractor shall permit the GoN/DP to inspect the Contractor's accounts and records relating to the performance of the Contractor and to have them audited by auditors appointed by the GoN /DP, if so, required by the GoN/DP.

3.2 The Bidder shall not carry out or cause to carry out the following acts with an intention to influence the implementation of the procurement process or the procurement agreement:

(a) give or propose improper inducement directly or indirectly,

(b) distortion or misrepresentation of facts,

(c) engaging in corrupt or fraudulent practice or involving in such act,

(d) interference in participation of other competing bidders,

(e) coercion or threatening directly or indirectly to cause harm to the person or the property of any person to be involved in the procurement proceedings,

	(f) collusive practice among bidders before or after submission of bids for distribution of works among bidders or fixing artificial/uncompetitive bid price with an intention to deprive the Employer the benefit of open competitive bid price, (g) Contacting the Employer with an intention to influence the Employer with regards to the bids or interference of any kind in examination and evaluation of the bids during the period from the time of opening of the bids until the notification of award of contract.
	3.3 PPMO, on the recommendation of the Procuring Entity may blacklist a Bidder for a period of one (1) to three (3) years for its conduct including on the following grounds and seriousness of the act committed by the bidder: (a) if convicted by a court of law in a criminal offence which disqualifies the Bidder from participating in the contract, (b) if it is established that the contract agreement signed by the Bidder was based on false or misrepresentation of Bidder's qualification information, (c) if it at any time determines that the firm has, directly or through an agent, engaged in corrupt, fraudulent, collusive, coercive, or obstructive practices in competing for, or in executing, a GoN/DP-financed contract. (d) if the Successful Bidder fails to sign the Contract. (e) if the bidder fails to inform or informs after the specified time about the saturation of the maximum number of contracts as per ITB 4.10. (f) a Bidder requests for withdrawal or modification of its bid: (i) after the Bid Submission deadline and during the period of validity specified by the Bidder on the Letter of Technical Bid and Price Bid, in case of electronic submission; (ii) from the period twenty-four hours prior to bid submission deadline up to the period of bid validity specified by the Bidder on the Letter of Technical Bid and Price Bid, in case of hard copy submission. (g) if the bidder does not provide clarifications of its Bid by the date and time set in the Employer's request for clarification as per ITB 27.1. (h) a Bidder changes the prices or substance of the bid while providing information pursuant to ITB 27.1.
	3.4 A bidder declared blacklisted and ineligible by the GoN, Public Procurement Monitoring Office (PPMO), by a competent authority under the prevailing law for failure to repay a loan disbursed by a bank or financial institution, and/or the DP in case of DP funded project, shall be ineligible to bid for a contract during the period of time determined by the GoN, PPMO, the competent authority, and/or the DP.
	3.5 In case of a natural person or firm/institution/company which is already declared blacklisted and ineligible by the GoN, any other new or existing firm/institution/company owned partially or fully by such Natural person or Owner or Board of director of blacklisted firm/institution/company; shall not be eligible bidder.
	3.6 Furthermore, Bidders shall be aware of the provisions of GCC 28.3 and GCC 72.3(j).
4. Eligible Bidders	4.1 A Bidder may be a natural person, private entity, or government owned entity subject to ITB 4.5 or any combination of them in the form of a Joint Venture (JV) under an existing agreement, or with the intent to constitute a legally-enforceable joint venture. In the case of a JV: (a) all partners shall be jointly and severally liable for the execution of the Contract in accordance with the Contract terms. Maximum number of JV shall be as **specified**

	in the BDS and (b) the JV shall nominate a Representative who shall have the authority to conduct all business for and on behalf of any and all the parties of the JV during the bidding process and, in the event the JV is awarded the Contract, during Contract execution.
	4.2 A Bidder, and all parties constituting the Bidder, shall have the nationality of an eligible country, in accordance with Section V (Eligible Countries). A Bidder shall be deemed to have the nationality of a country if the Bidder is a citizen or is constituted, or incorporated, and operates in conformity with the provisions of the laws of that country. This criterion shall also apply to the determination of the nationality of proposed sub-contractors or suppliers for any part of the Contract including related services.
	4.3 A Bidder shall not have a conflict of interest. A Bidder found to have a conflict of interest shall be disqualified. A Bidder may be considered to be in a conflict of interest with one or more parties in this bidding process, if any of, including but not limited to, the following apply: (a) they have controlling shareholders in common; or (b) they receive or have received any direct or indirect subsidy from any of them; or (c) they have the same legal representative for purposes of this bid; or (d) they have a relationship with each other, directly or through common third parties, that puts them in a position to have access to material information about or improperly influence the Bid of another Bidder, or influence the decisions of the Employer regarding this bidding process; or (e) a Bidder participates in more than one bid in this bidding process either individually or as a partner in a joint venture. This will result in the disqualification of all Bids in which it is involved. However, subject to any finding of a conflict of interest in terms of ITB 4.3 (a)-(d) above, this does not limit the participation of the same subcontractor in more than one bid; or (f) a Bidder or any of its affiliated entity, participated as a consultant in the preparation of the design or technical specifications of the works that are the subject of the Bid; or (g) a Bidder was affiliated with a firm or entity that has been hired (or is proposed to be hired) by the Employer as Engineer for the Contract. (h) a Bidder that has a close business or family relationship with a professional staff of the Procuring Entity.
	4.4 A firm that is under a declaration of ineligibility by the GoN in accordance with ITB 3, at the date of the deadline for bid submission or thereafter, shall be disqualified. A firm shall not be eligible to participate in any procurement activities under an DP-financed, -administered, or -supported project while under temporary suspension or debarment by DP pursuant to the DP's Anticorruption Policy (see ITB 3), whether such debarment was directly imposed by the DP, or enforced by other DPs pursuant to the Agreement for Mutual Enforcement of Debarment Decisions. A bid from a temporary suspended or debarred firm will be rejected.
	4.5 Enterprises owned by Government shall be eligible only if they can establish that they are legally and financially autonomous and operate under commercial law, and that they are not a dependent agency of the GoN.
	4.6 Bidders shall provide such evidence of their continued eligibility satisfactory to the

	Employer, as the Employer shall reasonably request.
	4.7 Firms shall be excluded in any of the cases, if (a) by an act of compliance with a decision of the United Nations Security Council taken under Chapter VII of the Charter of the United Nations, Nepal prohibits any import of goods or contracting of works or services from that country or any payments to persons or entities in that country. Where Nepal prohibits payments to a particular firm or for particular goods by such an act of compliance, that firm may be excluded; (b) DP Funded: as a matter of law or official regulation, Nepal prohibits commercial relations with that country, provided that the DP is satisfied that such exclusion does not preclude effective competition for the supply of goods or related services required; (c) DP Funded: a firm sanctioned or temporarily suspended by the DP in relation to their guidelines or appropriate provisions on preventing and combating fraud and corruption in projects financed by them.
	4.8 In case a prequalification process has been conducted prior to the bidding process, this bidding is open only to prequalified Bidders.
	4.9 The Bidder, including all parties constituting the Bidder, shall be ineligible to participate in the open competitive bidding process if it has already secured maximum number of construction contracts (in open competitive bidding) **as specified in BDS** and has not yet completed the work as stipulated in the respective contracts
	4.10 For the purpose of ITB 4.9 above, the bidder shall declare that the bidder, and all parties constituting the Bidder have not already secured maximum number of construction contract (in open competitive bidding) **as specified in BDS**. If the bidder, and all parties constituting the Bidder has participated in bidding processes of many public entities and during that period the maximum number of contracts have been attained as specified saturates due to issuance of letters of acceptance by a particular public entity, the bidder shall inform in writing to all other concerned public entities, where the bidder have participated in bidding process, within three days of issuance of last letter of acceptance that saturates the maximum number of contracts as specified.
5. Eligible Materials, Equipment and Services	5.1 The materials, equipment and services to be supplied under the Contract shall have their origin in any source countries as defined in accordance with Section V (Eligible Countries) and all expenditures under the Contract will be limited to such materials, equipment, and services. At the Employer's request, Bidders may be required to provide evidence of the origin of materials, equipment and services.
	5.2 For purposes of ITB 5.1 above, "origin" means the place where the materials and equipment are mined, grown, produced or manufactured, and from which the services are provided. Materials and equipment are produced when, through manufacturing, processing, or substantial or major assembling of components, a commercially recognized product results that differs substantially in its basic characteristics or in purpose or utility from its components.

B. Contents of Bidding Documents	
6. Sections of Bidding Document	6.1 The Bidding Document consist of Parts I, II, and III, which include all the Sections indicated below, and should be read in conjunction with any Addenda issued in accordance with ITB 8. PART I Bidding Procedures Section I Instructions to Bidders (ITB) Section II Bid Data Sheet (BDS) Section III Evaluation and Qualification Criteria (EQC) Section IV Bidding Forms (BDF) Section V Eligible Countries PART II Requirements Section VI Works Requirements (WRQ) Section VII Bill of Quantities (BOQ) PART III Conditions of Contract and Contract Forms Section VIII General Conditions of Contract (GCC) Section IX Special Conditions of Contract (SCC) Section X Contract Forms (COF)
	6.2 The Invitation for Bids (IFB) issued by the Employer is not part of the Bidding Document.
	6.3 The Employer is not responsible for the completeness of the Bidding Document and their Addenda, if they were not obtained directly from the source stated by the Employer in the Invitation for Bids.
	6.4 The Bidder is expected to examine all instructions, forms, terms, and specifications in the Bidding Document and to furnish with its bid all information and documentation as is required by the Bidding Documents. Failure to furnish all information or documentation required by the Bidding Document may result in the rejection of the bid.
7. Clarification of Bidding Document, Site Visit, Pre-Bid Meeting	7.1 A prospective Bidder requiring any clarification of the Bidding Document shall contact the Employer in writing at the Employer's address **indicated in BDS** or raise any question or curiosity during the pre-bid meeting if provided for in accordance with ITB 7.4. The Employer will respond in writing to any request for clarification, provided that such request is received within the period as mentioned in ITB 7.5. The Employer shall forward copies of its response to all Bidders who have acquired the Bidding Document in accordance with ITB 6.3, including a description of the inquiry but without identifying its source. Should the Employer deem it necessary to amend the Bidding Document as a result of a request for clarification, it shall do so following the procedure under ITB 8 and ITB 22.2.
	7.2 The Bidder is advised to visit and examine the Site of Works and its surroundings and obtain for itself, on its own risk and responsibility, all information that may be necessary for preparing the bid and entering into a Contract for construction of the Works. The costs of visiting the Site shall be at the Bidder's own expense.
	7.3 The Bidder and any of its personnel or agents will be granted permission by the Employer to enter upon its premises and lands for the purpose of such visit, but only upon the express condition that the Bidder, its personnel, and agents will release and indemnify the Employer and its personnel and agents from and against all liability in respect thereof, and will be responsible for death or personal injury, loss of or damage to

	property, and any other loss, damage, costs, and expenses incurred as a result of the inspection.
	7.4 The Bidder's designated representative is invited to attend a pre-bid meeting, if **provided for in the BDS**. The purpose of the meeting will be to clarify issues and to answer questions on any matter that may be raised at that stage.
	7.5 The Bidder is requested, to submit any questions in writing, to reach the Employer as **mentioned in BDS.**
	7.6 Minutes of the pre-bid meeting, including the text of the questions raised, without identifying the source, and the responses given, together with any responses prepared after the meeting, will be transmitted promptly to all Bidders who have acquired the Bidding Document in accordance with ITB 6.3. Any modification to the Bidding Document that may become necessary as a result of the pre-bid meeting shall be made by the Employer exclusively through the issue of an addendum pursuant to ITB 8 and not through the minutes of the pre-bid meeting.
	7.7 Nonattendance at the pre-bid meeting will not be a cause for disqualification of a Bidder.
8. Amendment of Bidding Document	8.1 At any time prior to the deadline for submission of bids, the Employer may amend the Bidding Document by issuing addendum or several addenda.
	8.2 Any addendum issued shall be part of the Bidding Document and shall be communicated in writing to all who have obtained the Bidding Document from the Employer in accordance with ITB 6.3.
	8.3 To give prospective Bidders reasonable time in which to take an addendum into account in preparing their Bids, the Employer may, at its discretion, extend the deadline for the submission of Bids, pursuant to ITB 22.2. However, the time available to submit bids shall not be less than five (5) days since amendment in bidding document.
C. Preparation of Bids	
9. Cost of Bidding	9.1 The Bidder shall bear all costs associated with the preparation and submission of its Bid, and the Employer shall in no case be responsible or liable for those costs, regardless of the conduct or outcome of the bidding process.
10. Language of Bid	10.1 The Bid, as well as all correspondence and documents relating to the bid exchanged by the Bidder and the Employer, shall be written in the language **specified in the BDS**. Supporting documents and printed literature that are part of the Bid may be in another language provided they are accompanied by an accurate translation of the relevant passages in the language **specified in the BDS**, in which case, for purposes of interpretation of the Bid, such translation shall govern.
11. Documents Comprising the Bid	11.1 The Bid shall comprise two envelopes submitted simultaneously, one called the Technical Bid containing the documents listed in ITB 11.2 and the other the Price Bid containing the documents listed in ITB 11.3, both envelopes enclosed together in an outer single envelope. 11.2 The Technical Bid shall comprise the following: (a) Letter of Technical Bid;

	(b) Bid Security in accordance with ITB 19; (c) alternative Technical Bid, at Bidder's option and if permissible, in accordance with ITB 13; (d) written confirmation authorizing the signatory of the Bid to commit the Bidder, in accordance with ITB 20.2; (e) documentary evidence in accordance with ITB 17, establishing the Bidder's qualifications to perform the contract; (f) Technical Proposal in accordance with ITB 16; (g) Bids submitted by a Joint Venture shall include a copy of the Joint Venture Agreement entered into by all partners. Alternatively, a Letter of Intent to execute a Joint Venture Agreement in the event of a successful Bid shall be signed by all partners and submitted with the Bid, together with a copy of the proposed agreement. The Joint Venture agreement, or letter of intent to enter into a Joint Venture including a draft agreement shall indicate at least the parts of the Works to be executed by the respective partners; (h) list of subcontractors, in accordance with ITB 34 (If any); and (i) Any other documents required in the **BDS.** 11.3 The Price Bid shall comprise the following: (a) Letter of Price Bid; (b) completed Bill of Quantities (BoQ), in accordance with ITB 12 and ITB 14, or as stipulated in the BDS; (c) alternative price Bids, at Bidder's option and if permissible, in accordance with ITB 13; (d) Table of Price adjustment (if applicable) ; and (e) Any other document required in the **BDS**.
	11.4 The Bidder is solely responsible for the authenticity of the submitted documents. 11.5 The Technical Bid shall not include any financial information related to the Price Bid. A Technical Bid containing such material financial information shall be declared non-responsive.
12. Letter of Bid and Schedules	12.1 The Letters of Technical Bid and Price Bid, Schedules, and all documents listed under ITB 11, shall be prepared using the relevant forms in Section IV (Bidding Forms) and in Section VII (Bill of Quantities). The forms must be completed without any alterations to the text, and no substitutes shall be accepted. All blank spaces shall be filled in with the information requested.
13. Alternative Bids	13.1 Unless otherwise **specified in the BDS**, alternative bids shall not be considered.
	13.2 When alternative times for completion are explicitly invited, a statement to that effect will be **included in the BDS**, as will the method of evaluating different times for completion.
	13.3 When specified in the BDS pursuant to ITB 13.1, and subject to ITB 13.4 below, Bidders wishing to offer technical alternatives to the requirements of the Bidding Document must first price the Employer's design as described in the Bidding Document and shall further provide all information necessary for a complete evaluation of the alternative by the Employer, including drawings, design calculations, technical specifications, breakdown of prices, and proposed construction methodology and other relevant

	details. Only the technical alternatives, if any, of the evaluated Bidder whose Bid Price is closest to the Average Bid Price conforming to the basic technical requirements shall be considered by the Employer.
	13.4 When **specified in the BDS**, Bidders are permitted to submit alternative technical solutions for specified parts of the Works. Such parts will be **identified in the BDS** and described in Section VI (Works Requirements). The method for their evaluation will be stipulated in Section III (Evaluation and Qualification Criteria).
14. Bid Prices and Discounts	14.1 The prices and discounts quoted by the Bidder in the Letter of Price Bid and in the Schedules shall conform to the requirements specified below.
	14.2 The Bidder shall submit a bid for the whole of the works described in ITB 1.1 by filling in prices for all items of the Works, as identified in Section VII (Bill of Quantities). In case of Unit Rate Contracts, the Bidder shall fill in rates and prices for all items of the Works described in the Bill of Quantities. Items against which no rate or price is entered by the Bidder will not be paid for by the Employer when executed and shall be deemed covered by the rates for other items and prices in the Bill of Quantities.
	14.3 The price to be quoted in the Letter of Price Bid shall be the total price of the Bid, excluding any discounts offered. Absence of the total price in the Letter of Price Bid may result in rejection of the Bid.
	14.4 The Bidder shall quote any discounts and the methodology for their application in the Letter of Price Bid, in accordance with ITB 12.1.
	14.5 If so indicated in ITB 1.1and ITB 35.4, bids are invited for individual Contracts or for any combination of Contracts (packages). Bidders wishing to offer any price reduction for the award of more than one Contract shall specify in their bid the price reductions applicable to each package, or alternatively, to individual Contracts within the package. Price reductions or discounts shall be submitted in accordance with ITB 14.4, provided the Bids for all Contracts are submitted and opened at the same time.
	14.6 Unless otherwise **provided in the BDS** and the Conditions of Contract, the prices quoted by the Bidder shall be fixed. If the prices quoted by the Bidder are subject to adjustment during the performance of the Contract in accordance with the provisions of the Conditions of Contract, the Bidder shall furnish the indices and weightings for the price adjustment formulae in the Table of Adjustment Data in Section IV (Bidding Forms) and the Employer may require the Bidder to justify its proposed indices and weightings.
	14.7 All duties, taxes, and other levies payable by the Contractor under the Contract, or for any other cause, as of the date 30 days prior to the deadline for submission of bids, shall be included in the rates and prices and the total bid price submitted by the Bidder.
15. Currency of Bid and Payment	15.1 The currency of the bid and payment shall be in Nepalese Rupees.
16. Documents Comprising the	16.1 The Bidder shall furnish a Technical Proposal including a statement of work methods, equipment, personnel, schedule and any other information as stipulated in Section IV (Bidding Forms), in sufficient detail to demonstrate the adequacy of the Bidders'

Technical Proposal	proposal to meet the work requirements and the completion time.
17. Documents Establishing the Qualifications of the Bidder	17.1 To establish its qualifications to perform the Contract in accordance with Section III (Evaluation and Qualification Criteria) the Bidder shall provide the information requested in the corresponding information sheets included in Section IV (Bidding Forms).
18. Period of Validity of Bids	18.1 Bids shall remain valid for the period **specified in the BDS.** The bid validity period shall start from the bid submission deadline as prescribed by the Employer in accordance with ITB 22.1. If the prescribed bid submission deadline date falls on a government holiday, then the next working day shall be considered as the bid submission deadline date. In such case the validity period of the bids shall be considered from the original bid submission deadline date. In the case of electronic bid submission, if any technical issue arises in the handling of the e-GP system, the PPMO may extend the deadline for bid submission. However, the validity period of the bids shall still be counted from the original bid submission deadline. A bid valid for a shorter period shall be rejected by the Employer as nonresponsive.
	18.2 In exceptional circumstances, prior to the expiration of the bid validity period, the Employer may request Bidders to extend the period of validity of their Bids. The request and the responses shall be made in writing. If a bid security is requested in accordance with ITB 19, it shall also be extended 30 days beyond the deadline of the extended validity period. A Bidder may refuse the request without forfeiting its bid security. A Bidder granting the request shall not be required or permitted to modify its Bid and to include any additional conditions against the provisions specified in Bid Documents.
19. Bid Security	19.1 The Bidder shall furnish as part of its bid, in original form, a bid security as **specified in the BDS**. In case of e-submission of bid, the Bidder shall upload scanned copy of Bid security letter at the time of electronic submission of the bid. The Bidder accepts that the scanned copy of the Bid security shall, for all purposes, be equal to the original. The details of original Bid Security and the scanned copy submitted with e-bid should be the same otherwise the bid shall be non-responsive.
	19.2 The bid security shall be, at the Bidder's option, in any of the following forms: (a) an unconditional bank guarantee from Commercial Bank or Financial Institution eligible to issue Bank Guarantee as per prevailing Law or; (b) a cash deposit voucher in the Employer's Account as **specified in BDS**. In the case of a bank guarantee, the bid security shall be submitted either using the Bid Security Form included in Section IV (Bidding Forms) or in another Form acceptable to the employer. The form must include the complete name of the Bidder. The bid security shall be valid for minimum thirty (30) days beyond the original validity period of the bid, or beyond any period of extension if requested under ITB 18.2. A bid security valid for a shorter period shall be rejected by the Employer as nonresponsive.
	19.3 The bid security issued by any foreign Bank outside Nepal must be counter guaranteed by Commercial Bank or Financial Institution eligible to issue Bank Guarantee as per

	prevailing Law in Nepal.
	19.4 Any bid not accompanied by an enforceable and substantially compliant bid security shall be rejected by the Employer as nonresponsive. In case of e- Submission, if the scanned copy of an acceptable Bid Security letter is not uploaded with the electronic Bid then Bid shall be rejected.
	19.5 The public entity shall return the bid securities except those that are to be forfeited as per ITB 19.6 to the respective bidders within three (3) days after the successful bidder has furnished the required performance security and signed the Contract Agreement pursuant, to ITB 40.1 and ITB 41.1.
	19.6 The bid security shall be forfeited if: **GoN funded:** (a) a Bidder requests for withdrawal or modification of its bid, except as provided in ITB 18.2: (i) during the period of bid validity specified by the Bidder on the Letter of Technical Bid and Price Bid, in case of electronic submission; (ii) from the period twenty-four hours prior to bid submission deadline up to the period of bid validity specified by the Bidder on the Letter of Technical Bid and Price Bid, in case of hard copy submission. (b)a Bidder changes the prices or substance of the bid while providing information pursuant to clause 27.1; (c) a Bidder involves in fraud and corruption pursuant to clause 3.1; (d) the successful Bidder fails to: (i) furnish a performance security in accordance with ITB 35.5, ITB 35.8 and ITB 40.1; or (ii) sign the Contract in accordance with ITB 41.1; or (iii) accept the correction of arithmetical errors pursuant to clause 33.1; (e) if the bidder fails to inform about the saturation of the maximum number of contracts as per ITB 4.10. **DP funded:** The bid security shall be forfeited (a) if a Bidder withdraws its bid during the period of bid validity specified by the Bidder on the Letters of Technical Bid and Price Bid, except as provided in ITB 18.2; or (b) if the successful Bidder fails to (i) furnish a performance security in accordance with ITB 35.5 and ITB 40.1; or (ii) sign the Contract in accordance with ITB 41.1; or (iii) accept arithmetical corrections in accordance with ITB 33.1.
	19.7 The Bid Security of a Joint Venture shall be in the name of the Joint Venture that submits the bid. If the Joint Venture has not been legally constituted at the time of bidding, the Bid Security shall be in the names of all future partners as named in the letter of intent mentioned in ITB 4.1.
20. Format and Signing of Bid	20.1 The Bidder shall prepare one original set of the Technical Bid and one original of the Price Bid comprising the Bid as described in ITB 11 and clearly mark it **"ORIGINAL – TECHNICAL BID"** and **"ORIGINAL – PRICE BID."** Alternative bids, if

	permitted in accordance with ITB 13, shall be clearly marked **"ALTERNATIVE".** In addition, the Bidder shall submit copies of the bid in the number specified in the BDS, and clearly mark each of them **"COPY."** In the event of any discrepancy between the original and the copies, the original shall prevail. In case of e-submission of bid, the Bidder shall submit his bid electronically in PDF or web forms files as specified in ITB Clause 21.1(b).
	20.2 The original and all copies of the bid shall be typed or written in indelible ink and shall be signed by a person duly authorized to sign on behalf of the Bidder. This authorization shall consist of a written confirmation as **specified in the BDS** and shall be attached to the bid. The name and position held by each person signing the authorization must be typed or printed below the signature. All pages of the bid, except for un amended printed literature, shall be signed or initialed by the person signing the bid.
	20.3 Any amendments such as interlineations, erasures, or overwriting shall be valid only if they are signed or initialed by the person signing the bid.
D. Submission and Opening of Bids	
21. Sealing and Marking of Bids	21.1 Unless otherwise **specified in BDS**, Bidders shall submit their bids by electronic or by mail/by hand/by courier. Procedures for submission, sealing and marking are as follows: (a) Bidders submitting bids by mail, by hand or by courier shall enclose the original of the Technical Bid, and the original of the Price Bid and each copy of the Technical Bid and Price Bid, including alternative bids, if permitted in accordance with ITB 13, in separate sealed envelopes, duly marking the envelopes as **"ORIGINAL TECHNICAL BID", "ORIGINAL – PRICE BID", "ALTERNATIVE" and "COPY No. – TECHNICAL BID" and "COPY NO. PRICE BID"** These envelopes containing the original and the copies shall then be enclosed in one single envelope. (b) Bidders submitting Bids electronically shall follow the electronic bid submission procedure specified in this clause. i. The bidder is required to register in the e-GP system https://www.bolpatra.gov.np/egp following the procedure specified in e-GP guideline. ii. Interested bidders may either purchase the bidding document from the Employer's office as specified in the Invitation for Bid (IFB) or bidders may download the IFB and bidding document from e-GP system. iii. The registered bidders need to maintain their profile data required during preparation of bids. iv. The bidder can prepare their technical and price bids using data and documents maintained in bidder's profile and forms/format provided in bidding document by Employer. The bidder may submit bids as a single entity or as a joint venture. The bidder submitting bid in joint venture shall have to upload joint venture agreement along with partner(s) Bolpatra ID provided during bidder's registration. v. Bidders (all partners in case of JV) should update their profile data and documents required during preparation and submission of their technical bids. vi. In case of bid submission in JV, the consent of the partners shall be obtained through the confirmation link sent to the registered email address and the partners shall have to acknowledge their confirmation.

The required forms and documents shall be part of technical bids.

No.	Document	Requirement	Remarks
1.	Letter of Technical Bid	Mandatory	PDF
2.	Bid Security / Bank Guarantee	Mandatory	PDF
3.	Firm or Company registration Certificate	Mandatory	PDF
4.	VAT and PAN registration Certificate	Mandatory (for domestic bidders only)	PDF
5.	Business Registration Licence	Mandatory	PDF
6.	Tax Clearance Certificate/Tax return submission evidence/evidence of time extension	Mandatory (for domestic bidders only)	PDF
7.	Power of Attorney of Bid signatory	Mandatory	PDF
8.	Joint venture agreement	Mandatory in case of JV Bids Only	PDF
9.	Qualification Documents	Mandatory	Using profile data(financial details, contract details etc.) and Technical Proposal
10.	Additional documents] specified in ITB 11.2 (i)	Mandatory (If any)	PDF

The required forms and documents shall be part of price bids.

No.	Document	Requirement	Remarks
1.	Letter of Price Bid	Mandatory	PDF
2.	Completed Bill of Quantities (BoQ)	Mandatory	Online Forms
3.	Price Adjustment Table	Mandatory (If applicable)	Online Forms
4.	Additional Documents specified in ITB 11.3 (e)	Mandatory (If any)	PDF

Note:

a) *The documents specified as "Mandatory" should be included in e-submission and non-submission of the documents shall be considered as non-responsive bid.*
b) *Bidders (all partners in case of JV) should verify/update their profile documents as appropriate for the specific bid before submitting their bid electronically.*

vii. After providing all the details and documents, two separate bid response documents i.e technical bids and price bids will be generated from the system. Bidders are advised to download and verify the response documents prior to bid submission.
viii. For verifying the authentic user, the system will send one time password (OTP) in the registered e-mail address of the bidder. System will validate the OTP and allow bidder to submit their bid.
ix. Electronically submitted bids can be modified and/or withdrawn through

	system. The bidder may modify their bids multiple times online within bid submission date and time specified in e-GP system. Once a Bid is withdrawn, bidder won't be able to submit another bid response for the same bid. x. The Bidder / Bid shall meet the following requirements and conditions for e-submission of bids; aa) The e-submitted bids must be readable through PDF reader. bb) The facility for submission of bid electronically through e-submission is to promote transparency, non-discrimination, equality of access, and open competition in the bidding process. The Bidders are fully responsible to use the e- submission facility properly in e-GP system as per specified procedures and in no case the Employer shall be held liable for Bidder's inability to use this facility. cc) When a bidder submits electronic bid through the PPMO e-GP portal, it is assumed that the bidder has prepared the bid by studying and examining the complete set of the Bidding documents including specifications, drawings and conditions of contract. 21.2. The inner and outer envelopes shall: (aa) bear the name and address of the Bidder; (bb) be addressed to the Employer as provided in BDS 22.1; (cc) bear the specific identification of this bidding process indicated in BDS 1.1; and 21.3 The outer envelope and the inner envelope containing Technical Proposal shall bear a warning not to open before the time and date for the opening of Technical Bid in accordance with ITB 25.1. 21.4 The inner envelope containing the Price Bid shall bear a warning not to open until advised by the Employer in accordance with ITB 25.7 21.5 If all envelopes are not sealed and marked as required, the Employer will assume no responsibility for the misplacement or premature opening of the bid.
22. Deadline for Submission of Bids	22.1 Bids must be received by the Employer at the address and no later than the date and time indicated **in the BDS**. In case of e-submission, the standard time for e-submission is Nepal Standard Time as set out in the server. The e-procurement system will accept the e-submission of bid from the date of publishing of notice and will automatically not allow the e-submission of bid after the deadline for submission of bid.
	22.2 The Employer may, at its discretion, extend the deadline for the submission of bids by amending the Bidding Document in accordance with ITB 8, in which case all rights and obligations of the Employer and Bidders previously subject to the deadline shall thereafter be subject to the deadline as extended.
23. Late Bids	23.1 The Employer shall not consider any bid that arrives after the deadline for submission of bids, in accordance with ITB 22. Any bid received by the Employer after the deadline for submission of bids shall be declared late, rejected, and returned unopened to the Bidder.
24. Withdrawal, and	24.1 A Bidder may withdraw, or modify its bid- Technical or Price - after it has been submitted either in hard copy or by e-submission. Once a Bid is withdrawn, bidder shall not be able to submit another bid for this bidding process. Procedures for withdrawal or

Modification of Bids	modification of submitted bids are as follows: (i) **Bids submitted in Hard Copy** **GoN Funded:** a) Bidders may withdraw or modify its bids by sending a written notice in a sealed envelope, duly signed by an authorized representative, and shall include a copy of the authorization in accordance with ITB 20.2. The corresponding modification of the bid must accompany the respective written notice. All notices must be: (aa) prepared and submitted in accordance with ITB 20 and ITB 21, and in addition, the respective envelopes shall be clearly marked "**WITHDRAWAL", "MODIFICATION;"** and (bb) received by the Employer twenty; four hours prior to the deadline prescribed for submission of bids, in accordance with ITB 22. **DP Funded:** A Bidder may withdraw or modify its Bid – Technical or Price – after it has been submitted by sending a written notice, duly signed by an authorized representative, and shall include a copy of the authorization in accordance with ITB 20.2, (except that withdrawal notices do not require copies). The corresponding modification of the Bid must accompany the respective written notice. All notices must be (a) prepared and submitted in accordance with ITB 20 and ITB 21 (except that withdrawal notices do not require copies), and in addition, the respective envelopes shall be clearly marked "WITHDRAWAL," and "MODIFICATION;" and (b) received by the Employer prior to the deadline prescribed for submission of Bids, in accordance with ITB 22. ii) **E-submitted bids**. a) Bidder may submit modification or withdrawal prior to the deadline prescribed for submission of bids through e-GP system by using the forms and instructions provided by the system.
	24.2 Bids requested to be withdrawn in accordance with ITB 24.1 shall not be opened. In case of hard copy submission, the Bid will be returned unopened to the Bidders.
	24.3 The following provisions apply for withdrawal or modification of the Bids: **GoN Funded:** (i) In case of bids submitted in hard copy no bid shall be withdrawn or modified in the interval between 24 hours prior to the deadline for submission of bids and the expiration of the period of bid validity specified by the Bidder on the Letter of Bid or any extension thereof. (ii) In case of e-submitted bids no bids shall be withdrawn or modified in the interval between deadline for submission of bids and the expiration of the period of bid validity specified by the Bidder on the Letter of Technical Bid and Price Bid or any extension thereof. **DP Funded:** No Bid may be withdrawn or modified in the interval between the deadline for submission of Bids and the expiration of the period of bid validity specified by the Bidder on the Letters of Technical Bid and Price Bid or any extension thereof.
	24.4 Except in case of any modification or correction in bid document made by procuring entity, Bidder may submit request for withdrawal or modification only one time.

	24.5 In case of hard copy bid, no bid may be withdrawn if the bid has already been modified; except in case of any modification or correction in bid document by procuring entity.
	24.6 Request for withdrawal or modification must be made through the same medium of submission. Request for withdrawal or modifications through different medium shall not be considered.
25. Bid Opening	25.1 The Employer shall open the Technical Bids in public at the address, on the date and time **specified in the BDS** in the presence of Bidders` designated representatives who choose to attend. The Price Bids will remain unopened and will be held in custody of the Employer until the specified time of their opening. If the Technical Bid and Price Bid are submitted together in one envelope, the Employer shall reject the Bid as nonresponsive.
	25.2 The Employer shall download the e-submitted Technical Bid. The e-GP system allows the Employer to download the e-submitted technical bid only after bid opening date and time after login simultaneously by at least two members of the Bid Opening Committee.
	25.3 Electronically submitted Technical Bid shall be opened at first in the same time and date as specified above. Electronic Bids shall be opened one by one and read out. The e-submitted technical bids must be readable through open standards interfaces. Unreadable and or partially submitted bid files shall be considered incomplete.
	25.4 Thereafter, envelopes marked "WITHDRAWAL" shall be opened and read out and the envelope with the corresponding Bid shall not be opened, but returned to the Bidder. No bid withdrawal shall be Permitted unless the corresponding withdrawal notice contains a valid authorization to request the withdrawal and is read out at bid opening. Next, envelopes marked "MODIFICATION" shall be opened and read out with the corresponding bid. No Technical Bid and/or Price Bid modification shall be permitted unless the corresponding modification notice contains a valid authorization to request the modification and is read out and recorded at bid opening. Only the Technical Bid, both Original as well as Modification, are to be opened, read out, and recorded at the opening. Price Bids, both Original and Modification, will remain unopened in accordance with ITB 25.1.
	25.5 All other envelopes holding the Technical Bid shall be opened one at a time, reading out: the name of the Bidder; whether there is a modification; the presence of a bid security and any other details as the Employer may consider appropriate. Only Technical Bids read out and recorded at bid opening shall be considered for evaluation. No bid shall be rejected at opening of Technical Bids except for late bids, in accordance with ITB 23.1.
	25.6 The Employer shall prepare a record of the opening of Technical Bids that shall include, as a minimum: the name of the Bidder and whether there is a withdrawal, or modification; and the presence or absence of a bid security. The Bidders' representatives who are present shall be requested to sign the record. The omission of a Bidder's signature on the record shall not invalidate the contents and effect of the record.
	25.7 At the end of the evaluation of the Technical Bids, the Employer will invite bidders who have submitted substantially responsive Technical Bids and who have been determined as being qualified for award to attend the opening of the Price Bids. The date, time, and location of the opening of Price Bids will be advised in writing by the

	Employer. Bidders shall be given at least 7 days' notice for the opening of Price Bids.
	25.8 The Employer will notify Bidders in writing who have been rejected on the grounds of their Technical Bids being substantially nonresponsive to the requirements of the Bidding Document and return their Price Bids unopened.
	25.9 The Employer shall conduct the opening of Price Bids of all Bidders who submitted substantially responsive Technical Bids, in the presence of Bidders` representatives who choose to attend at the address, on the date, and time specified by the Employer. The Bidder's representatives who are present shall be requested to sign a register evidencing their attendance.
	25.10 All envelopes containing Price Bids shall be opened one at a time and the following read out and recorded: (a) the name of the Bidder; (b) whether there is a modification; (c) the Bid Prices, including any discounts and alternative offers; and (d) any other details as the Employer may consider appropriate. Only Price Bids, discounts, modifications, and alternative offers read out and recorded during the opening of Price Bids shall be considered for evaluation. No Bid shall be rejected at the opening of Price Bids.
	25.11 The Employer shall prepare a record of the opening of Price Bids that shall include, as a minimum, the name of the Bidder, the Bid Price (per lot if applicable), any discounts, modifications and alternative offers. The Bidders' representatives who are present shall be requested to sign the record. The omission of a Bidder's signature on the record shall not invalidate the contents and effect of the record.
E. Evaluation and Comparison of Bids	
26. Confidentiality	26.1 Information relating to the examination, evaluation, comparison, and post-qualification of bids and recommendation of Contract award, shall not be disclosed to Bidders or any other persons not officially concerned with such process until information on Contract award is communicated to all Bidders.
	26.2 Any attempt by a Bidder to influence the Employer in the evaluation of the bids or Contract award decisions may result in the rejection of its bid.
	26.3 Notwithstanding ITB 26.2, from the time of bid opening to the time of Contract award, if any Bidder wishes to contact the Employer on any matter related to the bidding process, it may do so in writing.
27. Clarification of Bids	27.1 To assist in the examination, evaluation, and comparison of the Technical and Price Bids, the Employer may, at its discretion, ask any Bidder for a clarification of its Bid. Any clarification submitted by a Bidder that is not in response to a request by the Employer shall not be considered. The Employer's request for clarification and the response shall be in writing. No change in the substance of the Technical Bid or prices in the Price Bid shall be sought, offered, or permitted, except to confirm the correction of arithmetic errors discovered by the Employer in the evaluation of the Price Bids, in accordance with ITB 33. In case of e-submission of bid, upon notification from the

	employer, the bidder shall also submit the original of documents comprising the Technical and Price Bid as per ITB 11.2 and ITB 11.3 for verification of submitted documents for acceptance of the e-submitted bid.
	27.2 If a Bidder does not provide clarifications of its Bid by the date and time set in the Employer's request for clarification, its Bid shall be rejected.
28. Deviations, Reservations, and Omissions	28.1 During the evaluation of bids, the following definitions apply: (a) "Deviation" is a departure from the requirements specified in the Bidding Document; (b) "Reservation" is the setting of limiting conditions or withholding from complete acceptance of the requirements specified in the Bidding Document; and (c) "Omission" is the failure to submit part or all of the information or documentation required in the Bidding Document.
29. Examination of Technical Bid	29.1 The Employer shall examine the Technical Bid to confirm that all documents and technical documentation requested in ITB 11.2 have been submitted. If any of these documents or information (except alternative Technical Bid which is optional) is missing, the bid shall be rejected.
	29.2 In case of e-submission bids, the Employer shall confirm that all the documents and information requested in ITB 21.1 have been submitted. If any of these documents or information is missing, the bid shall be rejected.
30. Determination of Responsiveness of Technical Bid	30.1 The Employer's determination of a Bid's responsiveness is to be based on the contents of the bid itself, as defined in ITB 11.2.
	30.2 A substantially responsive Technical Bid is one that meets the requirements of the Bidding Document without material deviation, reservation, or omission. A material deviation, reservation, or omission is one that, (a) if accepted, would: (i) affect in any substantial way the scope, quality, or performance of the Works specified in the Contract; or (ii) limit in any substantial way, inconsistent with the Bidding Document, the Employer's rights or the Bidder's obligations under the proposed Contract; or (b) if rectified, would unfairly affect the competitive position of other Bidders presenting substantially responsive bids.
	30.3 The Employer shall examine the technical aspects of the Bid submitted in accordance with ITB 16, Technical Proposal, in particular, to confirm that all requirements of Section VI (Works Requirements) have been met without any material deviation, reservation or omission.
	30.4 If a bid is not substantially responsive to the requirements of the Bidding Document, it shall be rejected by the Employer and may not subsequently be made responsive by correction of the material deviation, reservation, or omission.
	30.5 In case of e-submission bids, the Employer evaluates the bid on the basis of the information in the electronically submitted bid files. If the Bidder cannot substantiate or provide evidence to establish the information provided in e-submitted bid through

	documents/ clarifications as per ITB Clause 27.1, the bid shall not be considered for further evaluation.
	30.6 Except in case of e-submission, the Price Bid of the bidder, which is evaluated as substantially non-responsive in technical bid, shall be returned to the respective bidders.
31. Non-conformities Errors, and Omissions	31.1 Provided that a bid is substantially responsive, the Employer may waive any non-conformities in the bid that do not constitute a material deviation, reservation, or omission.
	31.2 Provided that a Technical Bid is substantially responsive, the Employer may request that the Bidder submit the necessary information or documentation, within a reasonable period of time, to rectify nonmaterial nonconformities in the Technical Bid related to documentation requirements. Requesting information or documentation on such nonconformities shall not be related to any aspect of the Price Bid. Failure of the Bidder to comply with the request may result in the rejection of its bid.
	31.3 Provided that a Technical Bid is substantially responsive, the Employer shall rectify quantifiable nonmaterial nonconformities related to the Bid Price. To this effect, the Bid Price shall be adjusted, for comparison purposes only, to reflect the price of a missing or non-conforming item or component. The adjustment shall be made using the methods indicated in Section III (Evaluation and Qualification Criteria).
	31.4 If the monetary value of such non-conformities is found to be more than fifteen percent of the Bid Price of the bidder pursuant to ITB **31.3**, such bid shall be considered nonresponsive and shall not be involved in evaluation.
32 Eligibility and Qualification of the Bidder	32.1 The Employer shall determine to its satisfaction during the evaluation of Technical Bids whether Bidders meet the eligibility and qualifying criteria specified in Section III (Evaluation and Qualification Criteria).
	32.2 The determination shall be based upon an examination of the documentary evidence of the Bidder's qualifications submitted by the Bidder, pursuant to ITB 17.1. If two or more companies or firms have been merged prior to the submission of the bid, the qualifications of the companies or firms existing prior to such merger shall be deemed to form part of the qualifications of the resulting merged firm or company.
	32.3 An affirmative determination shall be a prerequisite for the opening and evaluation of a Bidder's Price Bid. A negative determination shall result into the disqualification of the Bid, in which event the Employer shall return the unopened Price Bid to the Bidder.
33. Correction of Arithmetical Errors	33.1 During the evaluation of Price Bids, the Employer shall correct arithmetical errors on the following basis: (a) only for unit price Contracts, if there is a discrepancy between the unit price and the total price that is obtained by multiplying the unit price and quantity, the unit price shall prevail and the total price shall be corrected, unless in the opinion of the Employer there is an obvious misplacement of the decimal point in the unit price, in which case the total price as quoted shall govern and the unit price shall be corrected; (b) if there is an error in a total corresponding to the addition or subtraction of subtotals, the subtotals shall prevail and the total shall be corrected; (c) If there is a discrepancy between the bid price in the Summary of Bill of Quantities

	and the bid amount in item (c) of the Letter of Price Bid, the bid price in the Summary of Bill of Quantities will prevail and the bid amount in item (c) of the Letter of Price Bid will be corrected. (d) If there is a discrepancy between words and figures, the amount in words shall prevail, unless the amount expressed in words is related to an arithmetic error, in which case the amount in figures shall prevail subject to (a), (b) and (c) above.
	33.2 If a Bidder does not accept the correction of arithmetical errors, its bid shall be disqualified and its bid security shall be forfeited.
34 Subcontractors	34.1 In case of Prequalification, the Bidder's Bid shall name the same subcontractor as submitted in the prequalification application and approved by the Employer. In case of Post-qualification, the Employer may permit subcontracting for certain specialized works as indicated in Section III When subcontracting is permitted by the Employer, the sub-contractor shall meet the qualifications criteria as indicated in section III. Sub-contractors' qualification and experience will not be considered for evaluation of the Bidder. The Bidder on its own (without taking into account the qualification and experience of the sub-contractor) should meet the qualification criteria. Bidders may propose subcontracting up to the percentage of total value of contracts or the volume of works as **specified in the BDS.**
35. Evaluation of Price Bids	35.1 The Employer shall use the criteria and methodologies listed in this Clause. No other evaluation criteria or methodologies shall be permitted.
	35.2 To evaluate a Price Bid, the Employer shall consider the following: (a) the bid price, excluding Value Added Tax, and Provisional Sums, in the Summary Bill of Quantities, for Unit Rate Contracts, or Schedule of Prices for lump sum Contracts, but including Day work items, where priced competitively; (b) adjustment for correction of arithmetic errors in accordance with ITB 33.1; (c) adjustment due to discounts offered in accordance with ITB 14.4; (d) adjustment for nonconformities in accordance with ITB 31.3; (e) application of all the evaluation factors indicated in Section III (Evaluation and Qualification Criteria) If the evaluated Bid Price of the Bidder is more than 30 (thirty) percent below or substantially higher than the cost estimate, the Employer shall reject the Bid as non-responsive.
	35.3 The estimated effect of the price adjustment provisions of the Conditions of Contract, applied over the period of execution of the Contract, shall not be taken into account in bid evaluation.
	35.4 If this Bidding Document allows Bidders to quote separate prices for different lots (Contracts), and to award multiple Contracts to a single Bidder **as specified in BDS**, the methodology to determine the lowest evaluated price of the Contract combinations, including any discounts offered in the Letter of Price Bid, is specified in Section III (Evaluation and Qualification Criteria).

	35.5 If the bid for a Unit Rate Contract, evaluated as per ITB 36.1, is front-loaded or has quoted abnormally high rate for any item believing that the item was underestimated, the Employer **shall** require the Bidder to provide clarification along with detailed rate analysis, for any or all items of the Bill of Quantities as per ITB 27.1. The rate analysis submitted shall be analyzed and compared against prevailing norms and rates, on the basis of the work execution methodology, technology, and management methods specified by the bidder. If the clarification is deemed unsatisfactory, the Employer shall require that the amount of the performance security be increased at the expense of the Bidder as **specified in BDS**.
	35.6 In case of e-submission bids, the Employer evaluates the bid on the basis of the information in the electronically submitted bid files. If the Bidder cannot substantiate or provide evidence to establish the information provided in e-submitted bid through documents/ clarifications as per ITB Clause 27.1, the bid shall not be considered for further evaluation.
	35.7 If all the Bids evaluated are substantially higher than the cost estimate, the employer may negotiate with the bidder who submitted the lowest evaluated substantially responsive Bid to propose a lump sum discount rate in order to bring the bid price within the approved cost estimate. However, no change in the substance of the bid is permitted during the negotiations.
	35.8 If no agreement can be reached as per ITB 35.7, the employer shall cancel the procurement proceedings.
36. Comparison of Bids	36.1 The Employer shall evaluate all the bid prices of the substantially responsive bids in accordance with ITB 35.2. The Employer shall determine the Average Bid Price of all the substantially responsive Bids. The Bid Price which is closest to the Average Bid Price AND is not substantially higher than the cost estimate shall be selected for awarding the contract. In case two or more Bid Prices are determined to be equally closest to the Average Bid Price, the Bid Price which is below the Average Bid Price shall be selected for awarding the contract.
	36.2 While evaluating the Bid Price as per ITB 36.1, if the Bid Price of two or more Bidders is found to be equal, the Employer shall select the bid for awarding the contract by drawing of lots in presence of Bidders' designated representatives who choose to attend in date, time and place as notified by the Employer in writing to the concerned bidders. The Bidders' representatives who are present shall be requested to sign a record evidencing their attendance. The omission of a Bidder's signature on the record or the absence of a Bidder during the drawing of lots shall not invalidate the contents and the effect of the record. The method of drawing of lots shall be determined by the Employer.

37. Employer's Right to Accept Any Bid, and to Reject Any or All Bids	37.1 The Employer reserves the right to accept or reject any bid, and to annul the bidding process and reject all Bids at any time prior to contract award, without thereby incurring any liability to Bidders. In case of annulment, all Bids submitted and specifically, bid securities, shall be promptly returned to the Bidders.
	37.2 The public entity shall give notice of the rejection of bids or the cancellation of the procurement proceedings pursuant to ITB 37.1, along with the reasons for such rejection or cancellation, to all bidders**.**
	37.3 Where any bidder requests, within thirty (30) days of the communication of the notice pursuant to ITB 37.2, the grounds for the rejection of all bids or the cancellation of the procurement proceedings, the public entity shall provide such information to that bidder**.**
F. Award of Contract	
38. Award Criteria	38.1 The Employer shall award the Contract to the Bidder whose Bid Price is selected as per ITB 35.7, ITB 36.1 or ITB 36.2 and is substantially responsive to the Bidding Document, provided further that the Bidder is determined to be qualified to perform the Contract satisfactorily.
39. Letter of Intent to Award the Contract/Notification of Award	39.1 The Employer shall notify the concerned Bidder whose bid has been selected in accordance with ITB 38.1 within seven days of the selection of the bid, in writing that the Employer has intention to accept its bid and the information regarding the name, address and amount of selected bidder shall be given to all other bidders who submitted the bid.
	39.2 After issuance of the notice under ITB 39.1 if the concerned bidder provides information pursuant to ITB 4.10 regarding saturation of maximum number of contracts, the employer shall disqualify the bidder and shall select the next Bidder whose Bid Price is closest to the previously determined Average Bid Price in accordance with ITB 38.1 and notify accordingly as per ITB 39.1.
	39.3 If no bidder submits an application pursuant to ITB 42 within a period of seven days of the notice provided under ITB 39.1, the Employer shall, accept the bid selected in accordance with ITB 38.1 and Letter of Acceptance shall be communicated to the selected bidder prior to the expiration of period of Bid validity, to furnish the performance security and sign the contract within fifteen days.
	39.4 After communicating letter of acceptance under ITB 39.3, if the concerned bidder provides information pursuant to ITB 4.10 regarding saturation of maximum number of contracts, the employer shall reject the bid of that bidder and shall select the next Bidder whose Bid Price is closest to the previously determined Average Bid Price in accordance with ITB 38.1 and shall issue the notice accordingly as per ITB 39.1. In such case bid security of the rejected bidder shall not be forfeited.
40. Performance Security	40.1 Within Fifteen (15) days of the receipt of Letter of Acceptance from the Employer, the successful Bidder shall furnish the performance security in an amount equal to 5 (five) percent of the Bid Price in accordance with the Conditions of Contract and subject to ITB 35.5, from Commercial Bank or Financial Institution eligible to issue Bank Guarantee as per prevailing Law in Nepal using Sample Form for the Performance Security included in Section X (Contract Forms), or another form acceptable to the Employer. The performance security issued by any foreign Bank outside Nepal must be counter guaranteed by Commercial Bank or Financial Institution eligible to issue Bank

	Guarantee as per prevailing Law in Nepal. The Bid Price shall be without VAT but including Provisional Sum.
	40.2 Failure of the successful Bidder to submit the above-mentioned Performance Security or to sign the Contract Agreement shall constitute sufficient grounds for the annulment of the award and forfeiture of the bid security. In that event the Employer may award the Contract to the next Bidder whose Bid Price is closest to the previously determined Average Bid Price in accordance with ITB 38.1 whose offer is substantially responsive and is determined by the Employer to be qualified to perform the Contract satisfactorily. The process shall be repeated according to ITB 39.
41 Signing of Contract	41.1 The Employer and the successful Bidder shall sign the Contract Agreement within the period as stated ITB 40.1.
	41.2 At the same time, the Employer shall affix a public notice on the result of the award on its notice board and make arrangement for causing such notice to be affixed on the notice board also of the ***District Coordination Committee, District Administration Office, Provincial Treasury and Controller Office and District Treasury and Controller Office.*** The Employer may make arrangements to post the notice into its website, if it has; and if it does not have, into the website of the Public Procurement Monitoring Office, identifying the bid and lot numbers and the following information: (i) the result of evaluation of bid; (ii) date of publication of notice inviting bids; (iii) name of newspaper; (iv) reference number of notice; (v) item of procurement; (vi) name and address of bidder making contract and (viii) contract price
	41.3 Within thirty (30) days from the date of issuance of notification pursuant to ITB 39.1 unsuccessful bidders may request in writing to the Employer for a debriefing seeking explanations on the grounds on which their bids were not selected. The Employer shall promptly respond in writing to any unsuccessful Bidder who, requests for debriefing.
	41.4 If the bidder whose bid has been accepted fails to sign the contract as stated ITB 40.1, the Public Procurement Monitoring Office shall blacklist the bidder on recommendation of the Public Entity.
42. Complaint and Review	42.1 If a Bidder is dissatisfied with the Procurement proceedings or the decision made by the Employer in opening of the price bid or the intention to award the Contract, it may file an application to the Chief of the Public Entity within Seven (7) days of providing the notice under ITB 25.8 and ITB 39.1 by the Public Entity, for review of the proceedings stating the factual and legal grounds.
	42.2 Late application filed after the deadline pursuant to ITB 42.1 shall not be processed.
	42.3 The chief of Public Entity shall, within five (5) days after receiving the application, give its decision with reasons, in writing pursuant to ITB 42.1: (a) whether to suspend the procurement proceeding and indicate the procedure to be adopted for further proceedings; or (b) to reject the application. The decision of the chief of Public Entity shall be final for the Bid amount up to the value as stated in 42.4.
	42.4 If the Bidder is not satisfied with the decision of the Public Entity in accordance with ITB 42.3, or the decision is not given within five (5) days of receipt of application pursuant to ITB 42.1, it can, within seven (7) days of receipt of such decision, file an application

	to the Public Procurement Review Committee of the GoN, stating the reason of its disagreement on the decision of the chief of Public Entity and furnishing the relevant documents, provided that its Bid amount ,equal or more than Rupees Twenty Million (NRs. 20,000,000). The application may be sent by hand, by post, by courier, or by electronic media at the risk of the Bidder itself.
	42.5 Late application filed after the deadline pursuant to ITB 42.4 shall not be processed.
	42.6 Within three (3) days of the receipt of application from the Bidder, pursuant to ITB 42.4, the Public Procurement Review Committee shall notify the concerning Public Entity to furnish its procurement proceedings, pursuant to ITB 42.3.
	42.7 Within three (3) days of receipt of the notification pursuant to ITB 42.6, the Public Entity shall furnish the copy of the related documents to the Public Procurement Review Committee.
	42.8 The Public Procurement Review Committee, after inquiring from the Bidder and the Public Entity, if needed, shall give its decision within thirty (30) days of the receipt of the application filed by the Bidder, pursuant to ITB 42.4.
	42.9 The Bidder, filing application pursuant to ITB 42.4, shall have to furnish a cash amount or Bank guarantee from Commercial Bank or Financial Institution eligible to issue Bank Guarantee as per prevailing Law equivalent to ten percent (10 %) of amount of bid security in case of complaint against decision pursuant to ITB 25.8 and one percent (1%) of its quoted Bid amount in case of complaint against decision pursuant to ITB 39.1 with the validity period of at least ninety (90) days from the date of the filing of application pursuant to ITB 42.4.
	42.10 If the claim made by the Bidder pursuant to ITB 42.4 is justified, the Public Procurement Review Committee shall have to return the security deposit to the applicant, pursuant to ITB 42.9, within seven (7) days of such decision made.
	42.11 If the application submitted by the Bidder pursuant to ITB 42.4 is dismissed by the Public Procurement Review Committee, the security deposit (Cash or Bank Guarantee) submitted by the Bidder pursuant to ITB 42.9 shall be forfeited.
	42.12 If the Employer does not implement the decision of the Public Procurement Review Committee, the bidder may file an application to the Public Procurement Review Committee.

Section II: Bid Data Sheet

This section consists of provisions that are specific to each procurement and supplement the information or requirements included in Section I. Instructions to Bidders.

A. General	
ITB 1.1	The number of the Invitation for Bids is: 07/083/084
ITB 1.1	The Employer is: ***Road Division Hetauda, Makwanpur***
ITB 1.1	**Multiple Contract or lots (contracts) is *not applicable***
ITB 2.1	The name of the Project is ***Upgrading of Tribhuvan Rajpath from Ghantaghar to Gandak Chowk Road, Parsa (Chainage Km 04+000 to Km 08+054)*** The implementing agency is ***Road Division Hetauda, Hetauda-10, Makwanpur*** GoN Funded or DP Funded: ***GoN Funded***
ITB 4.1 (a)	**For GoN Funded:** Maximum number of partners in a joint venture shall be: **3 (three)**
ITB 4.4	*For GoN:* ***ppmo.gov.np***
ITB 4.9 & ITB 4.10	**For GoN Funded:** The Bidder, including all parties constituting the Bidder, shall be ineligible to participate in the open competitive bidding process if it has already secured **five (5)** number of construction contracts (in open competitive bidding) and has not yet completed the work as stipulated in the respective contracts. Following Procurement of Works contracts shall not be counted for this purpose: a) The works for which tender were invited or contracts accepted before 2078-12-03 B.S (March 17, 2022 A.D). b) The works for which tender were invited and contracts accepted after 2078-12-03 B.S (March 17, 2022 A.D) but the work acceptance report has been approved according to Rule 117 of PPR. c) The works for which tenders were invited or contracts accepted under all types of foreign assistance. **For DP Funded:** ***[select one options as per DPs Policy]*** There is no limit on number of running contracts that a Bidder, and all parties constituting the Bidder can have or Maximum number of running contracts that a Bidder, and all parties constituting the Bidder can have shall be: ***Not Applicable***

B. Bidding Document	
ITB 7.1	For clarification purposes only, the Employer's address is: Attention: Kiran Karki ,Division chief Address: Road Division Hetauda Telephone: 057-520311,9855069272 Facsimile number: Electronic mail address: roaddivisionhetauda@gmail.com
ITB 7.4	A Pre-Bid meeting ***shall be*** held. Pre-Bid Meeting will **Take place at the following date, time and place:** Date: October 26, 2026 Time: 11:00 hours Place: Road Division Hetauda A site visit ***shall not be*** organized by the Employer.
ITB 7.5	Time for request: Requests for clarification should be received by the Employer no later than **10 days** prior to the deadline for submission of bids.
C. Preparation of Bids	
ITB 10.1	The language of the bid is: **English**
ITB 11.2 (i)	The Bidder shall submit with its Technical Bid the following additional documents: ➢ Up-to-date Firm/Company Registration Certificate (by all Firms in case of Joint Venture) ➢ VAT Registration Certificate ➢ Tax Clearance Certificate/Tax return submission evidence/evidence of time extension for fiscal Year 082/83 ➢ Business Registration (License) Certificate ➢ Bank Voucher/Cash Receipt for cost of Bid Document ➢ In case a Bidder is a Joint Venture, the Bidder shall submit a JV Undertaking document, as follows: ➢ JV Undertaking, setting out the legal undertaking between partners as a JV. This document shall be signed by all the partners who are members of the JV, and shall be addressed to the Employer and shall include: a) each such member's undertaking to be jointly and severally liable to the Employer for the performance of the Contractor's obligations under the Contract; b) identification and authorization of the leader of the JV; and c) identification of the separate scope or part of the Works (if any) to be carried out by each member of the JV. The Undertaking shall indicate precisely the role of each partner of the JV, indicating distribution of responsibilities of each partner in execution of the Works, in respect of works execution and resource mobilization (construction equipment, key personnel, financing), and percentage share of responsibility, in the following format:

	<table><tr><td>S.N</td><td>Name of the Partner</td><td>Role of each Partner (Identify Lead Partner/Each partner)</td><td>Distribution of responsibilities in execution of the works</td><td>% Participation</td></tr><tr><td></td><td></td><td></td><td></td><td></td></tr><tr><td></td><td></td><td></td><td></td><td></td></tr><tr><td></td><td></td><td></td><td></td><td></td></tr></table> ➢ Any documents as per addendum issued, if necessary.
ITB 11.3 (b)	In accordance with ITB 12 and ITB 14, the following schedules shall be submitted with the bid, including the priced Bill of Quantities for Unit Rate Contracts and Schedule of Prices for lump sum contracts: Not Applicable
ITB 11.3 (e)	The Bidder shall submit with its Price Bid the following additional documents: Not Applicable
ITB 13.1	Alternative bids ***shall not be*** permitted.
ITB 13.2	Alternative times for completion ***shall not be*** permitted.
ITB 13.4	Alternative technical solutions shall not be permitted
ITB 14.6	The prices quoted by the Bidder shall be subject to be adjustment during the performance of the Contract. The formula for adjusting the prices and explanatory details are specified in the GCC Clause 53. Bidder shall fill out the Tables of Adjustment Data in Section 4 (Bidding Forms)
ITB 18.1	The bid validity period shall be ***One Hundred Twenty (120) days.***
ITB 19.1	The Bidder shall furnish a bid security, from Commercial Bank or Financial Institution eligible to issue Bank Guarantee as per prevailing Law in Nepal with a minimum of NRs ***55.00 million***, which shall be valid for 30 days beyond the validity period of the bid.
ITB 19.2 (b)	Employer's Account Office Name: District Treasury Controller Office (Ko.Le.Ni.Ka.) Hetauda, Makwanpur Bank Name: Nepal Bank Limited Bank Address: City Office, Hetauda, Makwanpur Account Number: 02501000002003000001 Office Code: 337013201
ITB 20.1	In addition to the original of the bid, the number of copy/ies is/are: ***Not Applicable***
ITB 20.2	The written confirmation of authorization to sign on behalf of the Bidder shall indicate: (a) The name and description of the documentation required to demonstrate the authority of the signatory to sign the Bid such as a Power of Attorney; and (b) In the case of Bids submitted by an existing or intended JV, an undertaking signed by all parties (i) stating that all parties shall be jointly and severally liable, and (ii) nominating a Representative who shall have the authority to conduct all business for and on behalf of any and all the parties of the JV during the bidding process and, in the event the JV is awarded the Contract, during contract execution.

D. Submission and Opening of Bids	
ITB 21.1	Bidders shall have the option of submitting their bids ***by hand or by courier or by mail(hulak) only***.
ITB 22.1	For bid submission purposes only, the Employer's address is: Attention: Kiran Karki, Division Chief Address: Road Division Hetauda The deadline for bid submission is: Date: Nov 06, 2026 (2083/07/20) Time: **12:00 hours**
ITB 25.1	The Technical Bid opening shall take place at: Address: Road Division Hetauda, Makwanpur Date: Nov 06, 2026 (2083/07/20) Time: 13:00 hours
E. Evaluation and Comparison of Bids	
ITB 34.1	Contractor's proposed subcontracting: Not Applicable
ITB 35.4	Bidders are ***[insert "permitted" or "not permitted"]*** to quote separate prices for lots (Contracts), and a single Bidder will be awarded multiple lots (Contracts) based on provision of ***Paragraph 1.2, Multiple Contracts Section III (Evaluation and Qualification Criteria):*** ***[If permitted to quote separate prices for lots (Contracts), insert the following otherwise delete]*** ***Multiple contracts comprising of following lots (contracts):Not Applicable***
ITB 35.5	The amount of the performance security be increased by **Eight (8)** percent of the quoted bid price without VAT but Including PS.
ITB 41.4	For DP Funded: Not Applicable ***[For GoN funded delete this row]***

Section III: Evaluation and Qualification Criteria

This Section contains all the criteria that the Employer shall use to evaluate bids and qualify Bidders by post-qualification exercise. GoN/DP requires bidders to be qualified by meeting predefined, precise minimum requirements. The method sets pass-fail criteria, which, if not met by the bidder, results in disqualification. In accordance with ITB 32 and ITB 35, no other methods, criteria and factors shall be used. The Bidder shall provide all the information requested in the forms included in Section IV (Bidding Forms).

1. Evaluation

In addition to the criteria listed in ITB 35.2 (a) - (e) the following criteria shall apply:

Note:
Use the evaluation criteria listed below as appropriate and required for the project.

1.1 Adequacy of Technical Proposal

Evaluation of the Bidder's Technical Proposal will include an assessment of the Bidder's technical capacity, to mobilize key equipment and personnel for the contract consistent with its proposal regarding work methods, scheduling, and material sourcing in sufficient detail and fully in accordance with the requirements stipulated in Section VI (Works Requirements).

Non-compliance with equipment and personnel requirements described in Section VI (Works Requirements) shall not be grounds for bid rejection and such non-compliance will be subject to clarification and rectification prior to contract award.

1.2 Multiple Contracts : Not Applicable

Multiple Contracts, if permitted under ITB 35.4, will be evaluated as follows:

Award Criteria for Multiple Contracts [ITB 35.4]:

Bidders have the option to Bid for any one or more Contracts. Bids will be evaluated taking into account discounts offered, if any, for combined contracts. The contract(s) will be awarded to the Bidder or Bidders offering the lowest evaluated cost to the Employer for combined contracts, subject to the selected Bidder(s) meeting the required qualification criteria for combination of multiple contracts as the case may be.

Qualification Criteria for Multiple Contracts:

The criteria for qualification shall be the sum of the minimum requirements for respective individual contracts as specified under items 2.3.2, 2.3.3, 2.3.4 and 2.4.2 b.

With respect to the **Contracts of Similar Size and Nature** under item 2.4.2(a) of Section III, the evaluation shall be done as below:

N is the minimum number of contracts required as per Specific Construction Experience (2.4.2(a)).

V is the minimum value of a single contract as per Note (2~~),~~ **~~or~~** (3) of 2.4.2 Specific Construction Experience.

i. Minimum requirements for combined contract(s) shall be the aggregate requirements for each contract for which the bidder has submitted bids as follows, and N1,N2,N3, etc. shall be different contracts:

Contract 1: N1 contracts, each of minimum value V1;

Contract 2: N2 contracts, each of minimum value V2;

Contract 3: N3 contracts, each of minimum value V3;

----etc.

Or

ii. Total number of contracts is equal or less than N1 + N2 + N3 +--but the total value of all such contracts is equal or more than N1 x V1 + N2 x V2 + N3 x V3 +---.

1.3 In Case, other than Multiple Contracts

Bidders have the option to Bid for any one or more Contracts. The contracts will be awarded to the Bidder or Bidders offering the **substantially responsive Bid closest to the Average Bid Price** to the Employer, subject to the selected Bidder(s) meeting the required qualification which shall be the sum of the minimum requirements for respective individual contracts. Under this case, the Contract shall be awarded based on Least Cost Combination to the Employer.

1.4 Completion Time

An alternative Completion Time, if permitted under ITB 13.2, will be evaluated as follows:

Not Applicable

1.5 Alternative Technical Solutions

Alternative technical solutions, if permitted under ITB 13.4, will be evaluated as follows:

Not Applicable

1.6 Quantifiable Nonconformities and Omissions

Subject to ITB 14.2 and ITB 35.2, the evaluated cost of quantifiable nonconformities including omissions, is determined as follows:

[***Insert in bidding document:*** **"**Pursuant to ITB 31.3, the cost of all quantifiable nonmaterial nonconformities shall be evaluated, but excluding omission of prices in the BoQ.The Employer will make its own assessment of the cost of any nonmaterial nonconformities and omissions for the purpose of ensuring fair comparison of bids."]

2. Qualification

2.1 Eligibility

Criteria	Compliance Requirements				Documents
Requirement	**Single Entity**	**Joint Venture**			**Submission Requirements**
		All Partners Combined	**Each Partner**	**One Partner**	
2.1.1 Nationality					
Nationality in accordance with ITB sub-clause 4.2	must meet requirement	must meet requirement	must meet requirement	not applicable	Letter of Technical Bid, Forms ELI –1; ELI –2 with attachments
2.1.2 Conflict of Interest					
No conflicts of interest in accordance with ITB Sub-Clause 4.3.	must meet requirement	existing or intended JV must meet requirement	must meet requirement	not applicable	Letter of Technical Bid
2.1.3 Government/ DP Eligibility					
Not having been declared ineligible by government /DP, as described in ITB Sub-Clause 4.4.	must meet requirement	must meet requirement	must meet requirement	not applicable	Letter of Technical Bid
2.1.4 Government-owned Entity					
Bidder required to meet conditions of ITB Sub-Clause 4.5.	must meet requirement	existing or intended JV must meet requirement	must meet requirement	not applicable	Letter of Technical Bid, Forms ELI - 1, ELI - 2, with attachments
2.1.5 UN Eligibility					

Not having been declared ineligible based on a United Nations resolution or Employer's country law, as described in ITB Sub-Clause 4.7.	must meet requirement	existing or intended JV must meet requirement	must meet requirement	not applicable	Letter of Technical Bid
2.1.6 Bidder's Running Contracts					
Bidders have not yet secured five (5) number of construction Contracts (in open competitive bidding) as described in ITB Sub-Clause 4.9.	must meet requirement	existing or intended JV must meet requirement	must meet requirement	not applicable	Letter of Technical Bid, Form ELI-3
2.1.7 Other Eligibility					
Firm or Company Registration Certificate	must meet requirement	not applicable	must meet requirement	not applicable	Document attachment
Business Registration License	must meet requirement	not applicable	must meet requirement	not applicable	Document attachment
VAT and PAN Registration certificate	must meet requirement	not applicable	must meet requirement	not applicable	Document attachment
Tax Clearance Certificate for FY 2082/83 or Latest Tax return submission evidence .	must meet requirement	not applicable	must meet requirement	not applicable	Document attachment
Additional requirements ***[Insert if any]***	……	……	……	……	……

2.2 Pending Litigation

Criteria	Compliance Requirements				Documents
Requirement	**Single Entity**	**Joint Venture**			**Submission Requirements**
		All Partners Combined	**Each Partner**	**One Partner**	
2.2.1 Pending Litigation					
All pending litigation shall be treated as resolved against the Bidder and so shall in total not represent more than 50 percent of the Bidder's net worth.	must meet requirement by itself or as partner to past or existing JV	not applicable	must meet requirement by itself or as partner to past or existing JV	not applicable	Form LIT - 1

.

2.3 Financial Situation

2.3.1 Historical Financial Performance					
Submission of audited balance sheets and income statements, for the last ***three (3)*** years to demonstrate the current soundness of the Bidder's financial position. As a minimum, a Bidder's net worth for the last year calculated as the difference between total assets and total liabilities should be positive.	must meet requirement	not applicable	must meet requirement	not applicable	Form FIN - 1 with attachments

2.3.2 Average Annual Construction Turnover					
Minimum average annual construction turnover of NRs ***1180.00 million*** calculated as total certified payments received for construction contracts in progress or completed, within best three years out of last ten fiscal years.	must meet requirement	must meet requirement	must meet ***25%*** of the requirement	must meet ***40%*** of the requirement	Form FIN -2

Only the net amount shall be calculated after deducting the amount for VAT and such amount shall be adjusted to present value by applying wholesale price index of Nepal Rastra Bank.

2.3.3 Financial Resources					
Using Forms FIN - 3 and FIN - 4 in Section IV (Bidding Forms) the Bidder must demonstrate access to, or availability of, financial resources such as liquid assets[2], unencumbered real assets, and other financial resources, (other than any contractual advance payments) to meet the cash-flow requirement of NRs. ***197.00 million***	must meet requirement	must meet requirement	must meet ***25%*** of the requirement	must meet ***40%*** of the requirement	Form FIN - 3

2.3.4 Required Bid Capacity					
The bidding capacity of the bidder should be equal to or more than the NRs **1575.00 million**	must meet requirement	must meet requirement	must meet **25%** of the requirement	must meet **40%** of the requirement	Form FIN - 4 and Form FIN - 5

2.4 Experience

Criteria	Compliance Requirements				Documents
Requirement	**Single Entity**	**Joint Venture**			**Submission Requirement**
		All Partners Combined	**Each Partner**	**One Partner**	
2.4.1 General Construction Experience					
Experience under construction contracts in the role of contractor, subcontractor, or management contractor for at least the last **5** years prior to the applications submission deadline.	must meet requirement	not applicable	must meet requirement	not applicable	Form EXP - 1

Criteria	Compliance Requirements				Documents
Requirement	Single Entity	Joint Venture			Submission Requirement
		All Partners Combined	Each Partner	One Partner	
2.4.2 Specific Construction Experience					
(a) Contracts of Similar Size and Nature					
(iv) For complex works with Estimated value (without VAT & Contingency but including PS) above NRs. 100 million**					
Participation as Prime contractor, management contractor, or subcontractor, within the last **ten (10)**) years, that have been successfully or are substantially[a] completed and that are similar to the proposed works. The similarity shall be based on the physical size, complexity, methods, technology or other characteristics as described; 1…. 2…. 3…..	must meet requirement, in at least One (1) Contract of Road Construction works with a value of at least NRs 1180.00 million	not applicable	must meet requirement in at least one Road Construction with a value of at least NRs 197.00 million	must meet requirement, in at least One (1) Contract of Road Construction works with a value of at least NRs 1180.00 million	Form EXP – 2(a)

Only the net amount shall be calculated after deducting the amount for VAT and such amount shall be adjusted to present value by applying wholesale price index of Nepal Rastra Bank.

[a] A contract for which a Taking-Over Certificate has been issued shall be considered as substantially completed.

Criteria	Compliance Requirements				Documents
Requirement	Single Entity	Joint Venture			Submission Requirement
		All Partners Combined	Each Partner	One Partner	
(b) Construction Experience in Key Activities*					
Participation as Prime contractor, management contractor, or subcontractor, within a last ten (10) years, For the above or other contracts stipulated in 2.4.2(a) above, a minimum annual production rate on construction experience in the following key activities that have been successfully or substantially[a] completed: ***1. Annual Production of Asphalt concrete/DBM works of 5,450.00 cum per year in any one year of last ten years.***	must meet all requirements	must meet all requirements	not applicable	not applicable	Form EXP - 2(b)

2.5 Subcontractors

Not Applicable

Section IV: Bidding Forms

This Section contains the forms which are to be completed by the Bidder and submitted as part of its Bid.

Letter of Technical Bid

The Bidder must accomplish the Letter of Technical Bid in its letter head clearly showing the Bidder's complete name and address.

Date: .....

Name of the contract: .....

Invitation for Bid No.: .....

To: ***[Insert Complete name of Employer]*** ……..

We, the undersigned, declare that:

(a) We have examined and have no reservations to the Bidding Documents, including Addenda issued in accordance with Instructions to Bidders (ITB) Clause 8.

(b) We offer to execute in conformity with the Bidding Documents the following Works: ***[Insert Description of the works]***

(c) Our Bid consisting of the Technical Bid and the Price Bid shall be valid for a period of ***[insert validity period as specified in ITB 18.1 of the BDS]*** days from the date fixed for the bid submission deadline in accordance with the Bidding Documents, and it shall remain binding upon us and may be accepted at any time before the expiration of that period.

(d) Our firm, including any subcontractors or suppliers for any part of the Contract, have nationalities from eligible countries in accordance with ITB 4.2 and meet the requirements of ITB 3.4,& ITB 3.5

(e) We are not participating, as a Bidder or as a subcontractor, in more than one Bid in this bidding process in accordance with ITB 4.3(e), other than alternative offers submitted in accordance with ITB 13.

(f) Our firm, its affiliates or subsidiaries, including any Subcontractors or Suppliers for any part of the contract, has not been declared ineligible by DP, under the Employer's country laws or official regulations or by an act of compliance with a decision of the United Nations Security Council;

(g) [We are not a government owned entity] / [We are a government owned entity but meet the requirements of ITB 4.5];[1]

(h) We declare that, we including any subcontractors or suppliers for any part of the contract do not have any conflict of interest in accordance with ITB 4.3 and we have not been punished for an offense relating to the concerned profession or business.

(i) We declare that we are solely responsible for the authenticity of the documents submitted by us. The document and information submitted by us are true and correct. If any document/information given is found to be concealed at a later date, we shall accept any legal actions by the Employer.

(j) We agree to permit the Employer/DP or its representative to inspect our accounts and records and other documents relating to the bid submission and to have them audited by auditors appointed by the

Employer.

(k) If our Bid is accepted, we commit to mobilizing key equipment and personnel in accordance with the requirements set forth in Section VI (Works Requirement) and our technical proposal, or as otherwise agreed with the Employer.

(l) We declare that we have not yet secured five (5)[3] number of construction contract (in open competitive bidding) as described in ITB Sub-Clause 4.9.

Name: ***[insert complete name of the person signing the Bid]*****.....**

In the capacity of ***[insert legal capacity of person signing the Bid]*****.....**

Signed ***[signature of the person whose name and capacity are shown above]*****……...**

Duly authorized to sign the Bid for and on behalf of ***[insert complete name of the Bidder]*****……**

Date ***[insert date of signing]*****…….....**

[1]3 Note: Use one of the two options as appropriate.

Note: Following Procurement of Works contracts shall not be counted for this purpose:

a) The works for which tender were invited or contracts accepted before 2078-12-03 B.S (March 17, 2022 A.D).

b) The works for which tender have been invited and contracts accepted after 2078-12-03 B.S (March 17, 2022 A.D) but the work acceptance report has been approved according to Rule 117 of PPR.

c) The works for which tenders were invited or contracts accepted under all types of foreign assistance.

Letter of Price Bid

The Bidder must accomplish the Letter of Price Bid in its letterhead clearly showing the Bidder's complete name and address.

Date: .....

Name of the contract: .....

Invitation for Bid No.: .....

To: ***[Insert Complete name of Employer]*** ……..

We, the undersigned, declare that:

(a) We have examined and have no reservations to the Bidding Documents, including Addenda issued in accordance with Instructions to Bidders (ITB) Clause 8;

We offer to execute in conformity with the Bidding Documents the following Works: ***[Insert Description of the works]*** .

(c)The total price of our Bid, excluding any discounts offered in item (d) below is: ***[Insert one of the options below as appropriate]*** or when left blank is the Bid Price indicated in the Bill of Quantities.

Option 1, in case of single contract: Total price is: ***[insert the total price of the Bid in words and figures];***

Or

Option 2, in case of multiple lots (contracts): (i) Total price of each lot (contracts): ***[insert the total price of each lot in words and figures]***; (ii) Total price of subject contract [say Lot1] and Lot2 [another contract] ***[insert the total price in words and figures];*** (iii) Total price of subject contract [say Lot1]and Lot3 [another contract] ***[insert the total price in words and figures];*** Total price of subject contract [say Lot1], Lot2 [another contract], Lot3 [another contract], ***……..[insert the total price in words and figures]***;

(d) The discounts offered and the methodology for their application for subject contract [single contract] are:…….. [For Bidding Documents not provisioning multiple contracts]

Add following if Bidding Document provisions applicability of multiple contracts:

The discounts offered and the methodology for their application for subject contract [say Lot1] and Lot2 [another contract] are:……..

The discounts offered and the methodology for their application for subject contract [say Lot1] and Lot3 [another contract] are:……..



The discounts offered and the methodology for their application for subject contract [say Lot1], Lot2 [another contract] and Lot3 [another contract],……,
are:……..

[Note:
1. Formulate possible combinations depending upon the number of lots under Bidding Process and modify accordingly Paragraph (c) and (d)]

(e) Our bid shall be valid for a period of ***[insert validity period as specified in ITB 18.1]*** days from the date fixed for the bid submission deadline in accordance with the Bidding Documents, and it shall remain binding upon us and may be accepted at any time before the expiration of that period;

(f) If our bid is accepted, we commit to obtain a performance security in accordance with the Bidding Document;

(g) We have paid, or will pay the following commissions, gratuities, or fees with respect to the bidding process or execution of the Contract:[4]

Name of Recipient	Address	Reason	Amount
.....	.....	.....	.....
.....	.....	.....	.....

(h) We understand that this bid, *together with your written acceptance thereof i*ncluded **i**n your notification of award, shall constitute a binding contract between us, until a formal contract is prepared and executed;

(i) We understand that you are not bound to accept the bid closest to the Average Bid Price or any other bid that you may receive; and

(j) We declare that we are solely responsible for the authenticity of the documents submitted by us.

(k) We agree to permit the Employer/DP or its representative to inspect our accounts and records and other documents relating to the bid submission and to have them audited by auditors appointed by the Employer.

Name: ***[insert complete name of the person signing the Bid]***.....

In the capacity of ***[insert legal capacity of person signing the Bid]*****.....**

Signed ***[signature of the person whose name and capacity are shown above]*** ……...

Duly authorized to sign the Bid for and on behalf of ***[insert complete name of the Bidder]*****……**

Date ***[insert date of signing]***…… ……....

---

[4] If none has been paid or is to be paid, indicate "None".

Table of Price Adjustment Data[5]

[To be used if Price Adjustment is applicable as per GCC 53.1]

Code	Index Description	Source of Index*	Base Value and Date	Employer's Proposed Weighting Range (coefficient)	Bidder's Proposed Weighting (coefficient)**
1	2	3	4	5	6
	Non - Adjustable (A)			0.15	0.15
	Labor (b)			0.043-0.093	
	Materials (c)***			0.717-0.767	
	Equipment usage (d)			0.015-0.065	
		Total			1.00

*Normally following source of index shall apply. Public Entity shall choose applicable Index for each item.

(a) Labor: "National Salary and Wage Rate Index"- "Construction Labor" of Nepal Rastra Bank or rate fixed by District Rate Fixation Committee

(b) Material: "National Wholesale Price Index" - Construction Materials" of Nepal Rastra Bank

(c) Equipment usage: "National Wholesale Price Index" - Machinery and Equipment" of Nepal Rastra Bank or "Fuel" Price fixed by Nepal Oil Corporation.

** Bidders proposed weightings should be within the range specified by the Employer in column - 5
*** The materials can be broken down into major construction materials if necessary. In this case the source of index shall be the specified by Employer, preferably as per the published ex-factory price or published price from the sole authorized seller.

[5] Non-compliance of the data (stipulated by the bidder in this table) with requirements described here shall not be grounds for bid rejection and such non-compliance will be subject to clarification and rectification prior to contract award.

Table of Price Adjustment Data[6]

[To be used if Price Adjustment is applicable as per GCC 53.6]

Code	Construction Material*	Unit	Base Price (NRs/Unit) (Ex-factory)	Source (Factory)**
1	2	3	4	5

* Major construction materials to be specified by Employer in column - 2.

** Base Price and source normally to be specified by Employer (or alternatively informed to be proposed by bidder) in column 4 and 5.

Note:
The base prices of the construction materials shall be taken as of 30 days before the deadline for submission of the Bid as quoted by the Bidder and verified by the Employer. For the purpose of calculation of price adjustment, the Ex-factory price of the same source shall be taken into consideration.

[6] Non-compliance of the data (stipulated by the bidder in this table) with requirements described here shall not be grounds for bid rejection and such non-compliance will be subject to clarification and rectification prior to contract award.

Bid Security

Bank Guarantee

Bank's Name, and Address of Issuing Branch or Office

(On Letter head of the Bank)

Beneficiary: ***.....[Insert name and address of Employer]*** ……

Date: ……Bid Security No.: .....

We have been informed that. …….. ***[insert name of the Bidder]*** (hereinafter called "the Bidder")intends to submit its bid (hereinafter called "the Bid") to you for the execution of ***……....[Insert name of Contract]*** …… under Invitation for Bids No. ……***[insert IFB No.]*** ("the IFB").

Furthermore, we understand that, according to your conditions, bids must be supported by a bid guarantee.

At the request of the Bidder, we…….. . [***Insert name of Bank]*** …….. hereby irrevocably undertake to pay you any sum or sums not exceeding in total an amount of Nepalese Rupees . . ……...***[Insert amount in figures and amount in words} ……..*** upon receipt by us of your first demand in writing accompanied by a written statement stating that the Bidder is in breach of its obligation(s) under the bid conditions, because the Bidder:

(a) has withdrawn or modifies its Bid:

i) during the period of bid validity specified by the Bidder on the Letter of Technical and Price Bid, in case of electronic submission

(ii) from the period twenty-four hours prior to bid submission deadline up to the period of bid validity specified by the Bidder on the Letter of Technical Bid and Price Bid, in case of hard copy submission; or

(b) does not accept the correction of errors in accordance with the Instructions to Bidders (hereinafter "the ITB"); or

(c) changes the prices or substance of the bid while providing information pursuant to clause 27.1 of ITB; or

(d) having been notified of the acceptance of its Bid by the Employer during the period of bid validity, (i) fails or refuses to execute the Contract Agreement, or (ii) fails or refuses to furnish the performance security, in accordance with the ITB; or

(e) is involved in fraud and corruption in accordance with the ITB; or

(f) if the bidder fails to inform about the saturation of the maximum number of contracts as per ITB 4.10.

This guarantee will remain in force up to and including the date ……***number***……days after the deadline for submission of Bids as such deadline is stated in the instructions to Bidders or as it may be extended by the Employer, notice of which extension(s) to the Bank is hereby waived. Any demand in respect of this guarantee should reach the Bank not letter than the above date.

This Bank guarantee shall not be withdrawn or released merely upon return of the original guarantee by the Bidder unless notified by you for the release of the guarantee.

This guarantee is subject to the Uniform Rules for Demand Guarantees (URDG), 2010 Revisions, ICC Publication No. 758, except that the supporting statement under Article 15(a) is hereby excluded.

. . .Bank's seal and authorized signature(s) . . .

Note:

The bid security of ……..……. has been counter guaranteed by the Bank ……..……..…… on …….. ....……..…… (Applicable for Bid Security of Foreign Banks).

Technical Proposal Format

Personnel

Equipment

Site Organization

Method Statement

Mobilization Schedule

Construction Schedule

Others

Personnel

Form PER - 1: Proposed Personnel

Bidders should provide the names of suitably qualified personnel to meet the specified requirements for each of the positions listed in Section VI (Work Requirements). The data on their experience should be supplied using the Form below for each candidate.

No.	Name	Position*	Academic Qualification	Total Work Experience [Years]	Experience in Similar Works [years]
1.					
2.					
3.					
4.					
5.					

* As listed in Section VI (Work Requirements).

Form PER - 2: Resume of Proposed Personnel

The Bidder shall provide all the information requested below.

Position*		
Personal Information	Name	Date of Birth
	Professional qualifications	
Present employment	Name of employer	
	Address of employer	
	Telephone	Contact (manager/personnel officer)
	Fax	E-mail
	Job title	Years with present employer

Summarize professional experience over the last twenty years in reverse chronological order. Indicate particular technical and managerial experience relevant to the project.

From	**To**	**Company, Project, Position and Relevant Technical and Management Experience**

Equipment

Form EQU: Equipment

The Bidder shall provide adequate information to demonstrate clearly that it has the capability to meet the requirements for the key equipment listed in Section VI (Work Requirements). A separate Form shall be prepared for each item of equipment listed, or for alternative equipment proposed by the Bidder.

(i) For the equipment under Bidder's ownership

No.	Equipment Type and Characteristics	Total Nos. of Equipment under Bidder's Ownership	No. of Equipment engaged/proposed for ongoing/committed contracts	Nos. of Equipment proposed for this contract
1.				
2.				
3.				
4.				
5.				
6.				

(ii) For the Equipment to be leased/hired

No.	Equipment Type and Characteristics	Total Nos. of Equipment under the ownership of lease/hire provider	No. of Equipment engaged/committed for other works	Nos. of Equipment proposed to be leased/hired for this contract
1.				
2.				
3.				
4.				
5.				

Type of Equipment		
Equipment Information	Name of manufacturer	Model and power rating
	Capacity	Year of manufacture
Current Status	Current location	
	Details of current commitments	
Source	Indicate source of the equipment ☐ Owned ☐ Rented ☐ Leased ☐ Specially manufactured	

The following information shall be provided only for equipment not owned by the Bidder.

Owner	Name of owner	
	Address of owner	
	Telephone	Contact name and title
	Fax	Email
Agreements	Details of rental / lease / manufacture agreements specific to the project	

The Bidder shall be solely responsible for the data provided. However, this shall not limit the right of Employer to verify the authenticity of submitted information.

Bidder's Information and Qualification Format

Site Organization

Method Statement

Mobilization Schedule

Construction Schedule

Others

Bidder's Qualification

To establish its qualifications to perform the contract in accordance with Section III (Evaluation and Qualification Criteria) the Bidder shall provide the information requested in the corresponding Information Sheets included hereunder.

Form ELI - 1: Bidder's Information Sheet

Bidder's Information	
Bidder's legal name	
In case of JV, legal name of each partner	
Bidder's country of constitution	
Bidder's year of constitution	
Bidder's legal address in country of constitution	
Bidder's authorized representative (name, address, telephone numbers, fax numbers, e-mail address)	
Attached are copies of the following original documents.	
1. In case of single entity, articles of incorporation or constitution of the legal entity named above, in accordance with ITB 4.1 and 4.2. 2. Authorization to represent the firm or JV named in above, in accordance with ITB 20.2. 3. In case of JV, letter of intent to form JV or JV agreement, in accordance with ITB 4.1. 4. In case of a government-owned entity, any additional documents not covered under 1 above required to comply with ITB 4.5.	

Form ELI - 2: JV Information Sheet

Each member of a JV must fill in this form

JV / Specialist Subcontractor Information	
Bidder's legal name	
JV Partner's or Subcontractor's legal name	
JV Partner's or Subcontractor's country of constitution	
JV Partner's or Subcontractor's year of constitution	
JV Partner's or Subcontractor's legal address in country of constitution	
JV Partner's or Subcontractor's authorized representative information (name, address, telephone numbers, fax numbers, e-mail address)	
Attached are copies of the following original documents.	
1. articles of incorporation or constitution of the legal entity named above, in accordance with ITB 4.1 and 4.2. 2. Authorization to represent the firm named above, in accordance with ITB 20.2. 3. In the case of government-owned entity, documents establishing legal and financial autonomy and compliance with commercial law, in accordance with ITB 4.5.	

Form ELI - 3: Bidder's Running Contracts[7]

Each member of a JV must fill in this form

	Bidder's Running Contracts				
Name of office	**Contract Identification no.**	**Source of Fund***	**Date of issuance of Letter of Acceptance**	**Status of contract****	**Date of Issuance of Taking Over Certificate*****

* Mention GON funded or DP funded or Other PE (Insert name) funded

** Mention "Yet to sign" if contract is not signed, "Running" if contract has been signed and contract is running and "Substantially completed" if taking over certificate has been issued.

** Insert date of issuance of taking over certificate if the awarded contract has been substantially completed and taking over certificate has been issued.

[7]:Note Following Procurement of Works contracts shall not be counted for this purpose

a) The works for which tender were invited or contracts accepted before 2078-12-03 B.S (March 17, 2022 A.D).

b) The works for which tender have been invited and contracts accepted after 2078-12-03 B.S (March 17, 2022 A.D) but the work acceptance report has been approved according to Rule 117 of PPR.

c) The works for which tenders were invited or contracts accepted under all types of foreign assistance

Form LIT - 1: Pending Litigation

Each member of a JV must fill in this form

Pending Litigation			
🗀 No pending litigation in accordance with Criteria 2.2 of Section III (Evaluation and Qualification Criteria) 🗀 Pending litigation in accordance with Criteria 2.2 of Section III (Evaluation and Qualification Criteria)			
Year	**Matter in Dispute**	**Value of Pending Claim in NRS**	**Value of Pending Claim as a Percentage on Net Worth**

Form FIN - 1: Financial Situation

Each Bidder or member of a JV must fill in this form

Financial Data for Previous 3 Years [in NRS]		
Year 1 :	**Year 2 :**	**Year 3 :**

Information from Balance Sheet

Total Assets			
Total Liabilities			
Net Worth			
Current Assets			
Current Liabilities			

Information from Income Statement

Total Revenues			
Profit Before Tax			
Profit After Tax			

- Attached are copies of financial statements (balance sheets including all related notes, and income statements) for the last three or above years, as indicated above, complying with the following conditions.
- All such documents reflect the financial situation of the Bidder or partner to a JV, and not sister or parent companies.
- Historic financial statements must be audited by a certified auditor.
- Historic financial statements must be complete, including all notes to the financial statements.
- Historic financial statements must correspond to accounting periods already completed and audited (no statements for partial periods shall be requested or accepted).

Form FIN - 2: Average Annual Construction Turnover

Each Bidder or member of a JV must fill in this form

The information supplied should be the Annual Turnover of the Bidder or each member of a JV in terms of the amounts billed to clients for each year for work in progress or completed to NRs at the end of the period reported.

Annual Turnover Data for the Last 10 Years (Construction only)	
Year	Amount Currency

- **Average Annual Construction Turnover (Best three years within the last 10 years)**

Form FIN - 3: Financial Resources

Specify proposed sources of financing, such as liquid assets, unencumbered real assets and other financial means, net of current commitments, available to meet the total construction cash flow demands of the subject contract or contracts as indicated in Section III (Evaluation and Qualification Criteria).

Financial Resources		
No.	**Source of financing**	**Amount (in NRS)**
1		
2		
3		

Form FIN – 4: Bid Capacity

Each Bidder or member of a JV must fill in this form

Bid Capacity = [(5 x A) – B]

A = Average Annual Turnover of best three years out of last ten fiscal years.

B = Annual Value of the existing commitments and works (ongoing) to be completed, calculated from **FIN-4.**

SN	Name of Bidder	Pan No.	A, in Million	B, in Million	Bid Capacity, in Million
1					
2					
3					

Total Bid Capacity:

Signature of Bidder

Form FIN- 5: Current Contract Commitments / Works in Progress

Bidders and each partner to a JV should provide information on their current commitments on all contracts that have been awarded, or for which a letter of intent or acceptance has been received, or for contracts approaching completion, but for which an unqualified, full completion certificate has yet to be issued.

Current Contract Commitments (For Calculation of B with reference of FIN-3)									
No.	**Name of Contract**	**Name of the Contractor/s**	**Employer's Contact Address, Tel, Fax**	**Contract Share in % (a)**	**Contract Amount in Millions (b)**	**Contract Date(yyyy-mm) (c)**	**Initial or Revised Contract Duration (months) (d)**	**Value of outstanding works [In Millions, NRS]# (e)**	**Estimated Time in Month to Complete the outstanding works (f) = (c) + (d) – Date of Invitation of Bid (f)**
1									
2									
3									
4									

Signature of Bidder

 # The Outstanding Works means Contract Price (excluding Vat) minus Work Evaluated by Employer till the reference date. Bidder shall have to submit the relevant documentary evidence to substantiate the facts/figures.

Note 1: "B" shall be calculated as : $B = \sum \left[\frac{(e) \times (a)}{(f)} \right] x12$ **, If (f) is less than 12, then value of (f) shall be taken as 12.**

Note 2: If Initial or Revised Contract Date is run out with respect to Date of Invitation of Bid, the Estimated Time in Month to Complete the outstanding works shall be taken equal to 12 months.

Form EXP - 1: General Construction Experience

Each Bidder or member of a JV must fill in this form.

General Construction Experience				
Starting Month Year	**Ending Month Year**	**Year**	**Contract Identification and Name and Address of Employer Brief Description of the Works Executed by the Bidder**	**Role of Bidder**

Form EXP - 2(a): Specific Construction Experience

Fill up one (1) form per contract.

Contract of Similar Size and Nature			
Contract No…… of…..	**Contract Identification**		
Award Date		**Completion Date**	
Role in Contract	☐ **Contractor**	☐ **Management Contractor**	☐ **Subcontractor**
Total Contract Amount	☐ **NRS ……..**		
If Partner in a JV or subcontractor, specify participation of total contract amount	**Percent of Total**	**Amount**	
Employer's Name **Address** **Telephone/Fax** **Number** **E-mail**			
Description of the similarity in accordance with Criteria 2.4.2 (a) of Section III			
Note : ***The Employer should insert here contract size, complexity, methods, technology, or other characteristics as described in Section III (EQC), 2.4.2 (a) against which the bidder demonstrates similarity in the box on the right-hand-side.***			

Form EXP - 2(b): Specific Construction Experience in Key Activities

Fill up one (1) form per contract.

Contract of Similar Size and Nature			
Contract No…… of……..	**Contract Identification**		
Award Date		**Completion Date**	
Role in Contract	🗀 **Contractor**	🗀 **Management Contractor**	🗀 **Subcontractor**
Total Contract Amount	🗀 **NRS ……..**		
If Partner in a JV or subcontractor, specify participation of total contract amount	**Percent of Total**	**Amount**	
Employer's Name **Address** **Telephone/Fax** **Number** **E-mail**			
Description of the similarity in accordance with Criteria 2.4.2 (a) of Section III			
Note : *The Employer should insert here production rate(s) for the key activity (activities) subject contract against which the bidder demonstrates in the box on the right-hand-side production rates achieved by him on previous contracts.*			

Section V - Eligible Countries

[This section contains the list of eligible countries. Select one option, either GoN Funded or DP Funded.]

For GoN funded*: [with estimate up to NRs. 5 billion]*

For the purpose of ITB 4.2: "**Nepal"**; and

For the purpose of Country-of-Origin ITB 5.1 and GCC 79.2: **"all Countries"**

For DP funded: [**attach list as per their list of eligible countries]**

Part II: REQUIREMENTS

Table of Clauses

Section VI: Works Requirements

Scope of Work 778

Specifications 79

Notes on the Specifications 79

Sample Clause: Equivalency of Standards and Codes 80

Drawings 81

Supplementary Information 82

Section VII: Bill of Quantities 85

Notes for Unit Rate Contracts: 85

Preamble of Bill of Quantities 86

A. General 86

B. Day work Schedule 87

Provisional Sums 89

Bill of Quantities 89

Section VI: Works Requirements

This Section contains the Scope of Work, Specification, the Drawings, supplementary information that describe the Works to be procured, Personnel Requirements and Equipment Requirements.

Scope of Work

Upgrading of Tribhuvan Rajpath from Ghantaghar to Gandak Chowk Road, Parsa (Chainage Km 04+000 to Km 08+054)

Specifications

Notes on the Specifications

A set of precise and clear specifications is a prerequisite for Bidders to respond realistically and competitively to the requirements of the Employer without qualifying or conditioning their Bids. The specifications must be drafted to permit the widest possible competition and, at the same time, present a clear statement of the required standards of workmanship, materials, and performance of the goods and services to be procured. Only if this is done will the objectives of economy, efficiency and fairness in procurement be realized, responsiveness of Bids be ensured, and the subsequent task of bid evaluation facilitated. The specifications should require that all goods and materials to be incorporated in the Works be new, unused, of the most recent or current models, and incorporate all recent improvements in design and materials unless provided otherwise in the Contract.

Samples of specifications from previous similar projects are useful in this respect. The use of metric units is encouraged by the Funding Agency in case of funding assisted projects. Most specifications are normally written specially by the Employer or Project Manager to suit the Contract Works in hand. The available standard specification of works of Ministry of Physical Infrastructure and Transport, DoLI and Other line Ministries can be adopted for respective civil construction works.

There are considerable advantages in standardizing General Specifications for repetitive Works in recognized public sectors, such as highways, urban housing, irrigation, and water supply, in the same country or region where similar conditions prevail. The General Specifications should cover all classes of workmanship, materials, and equipment commonly involved in construction; however, it may not necessarily be adequate to be used in a particular Works Contract and may necessitate preparation of Particular (Special) Specifications to amend and or supplement the provision of the General Specifications to meet the requirement of the particular Works.

Care must be taken in drafting specifications to ensure that they are not restrictive. In the specification of standards for goods, materials, and workmanship, recognized international standards should be used as much as possible. Where other particular standards are used, whether national standards of Nepal or other standards, the specifications should state that goods, materials, and workmanship that meet other authoritative standards, and which ensure substantially equal or higher quality than the standards mentioned, will also be acceptable.

Employers should decide whether technical solutions to specified parts of the Works are to be permitted. Alternatives are appropriate in cases where obvious (and potentially less costly) alternatives are possible to the technical solutions indicated in the Procurement Documents for certain elements of the Works, taking into consideration the comparative specialized advantage of potential bidders. For example:

The Employer should provide a description of the selected parts of the Works with appropriate references to Drawings, Specifications, Bill of Quantities, and Design or Performance criteria, stating that the alternative solutions if applicable shall be at least structurally and functionally equivalent to the basic design parameters and specifications.

Such alternative solutions shall be accompanied by all information necessary for a complete evaluation by the Employer, including drawings, design calculations, technical specifications, breakdown of prices, proposed

construction methodology, and other relevant details.

Sample Clause: Equivalency of Standards and Codes

Wherever reference is made in the Contract to specific standards and codes to be met by the goods and materials to be furnished, and work performed or tested, the provisions of the latest current edition or revision of the relevant standards and codes in effect shall apply, unless otherwise expressly stated in the Contract. Where such standards and codes are national, or relate to a particular country or region, other authoritative standards that ensure a substantially equal or higher quality than the standards and codes specified will be accepted subject to the Project Manager's prior review and written consent. Differences between the standards specified and the proposed alternative standards shall be fully described in writing by the Contractor and submitted to the Project Manager at least 30 days prior to the date when the Contractor desires the Project Manager's consent. In the event the Project Manager determines that such proposed deviations do not ensure substantially equal or higher quality, the Contractor shall comply with the standards specified in the documents.

These Notes for Preparing Specifications are intended only as information for the Employer or the person drafting the Procurement Documents. They should not be included in the final documents.

[Standard Specifications for this Contract shall be the "Standard Specifications for Road and Bridge Works, 2073 3rd Amendment 2082" issued under the authority of Government of Nepal, Ministry of Physical Infrastructure & Transport, Department of Roads which could be separately purchased from the Quality Research and Development Center (QRDC), DOR Central Laboratory, Chakupat, Lalitpur at the bidder's own cost]

Drawings

Note:

1. It is customary to bind the drawings in a separate volume, which is often larger than other volumes of the contract documents. The size will be dictated by the scale of the drawings, which must not be reduced to the extent that details are reduced illegible.

2. A simplified map showing the location of the Site in relation to the local geography, indicating major roads, posts, airports, and railroads, is helpful.

3. The construction drawings, even if not fully developed, must show sufficient details to enable bidders to understand the type and complexity of the work involved and the price the Bill of Quantities.

[Insert Drawings]

Supplementary Information

[insert supplementary information if any]

Personnel Requirements

Using Form PER-1 and PER-2 in Section IV (Bidding Forms), the Bidder must demonstrate it has personnel that meet the following requirements:

SN.	Position	Required No.	Academic Qualification *[When position demands]*	Total Work Experience [Years]	Experience in Similar Works [years]
1.	Contract Manager	1	Master's degree in civil engineering or equivalent	10	3
2.	Site Engineer	2	Bachelor's degree in civil engineering	7	3
3.	Quality Control Engineer	1	Bachelor's degree in civil engineering	5	3
4.	Environment Safeguard/Safety Engineer	1	Bachelor's degree in civil/environment engineering	5	2

Equipment Requirements

Using Form EQU in Section IV (Bidding Forms), the Bidder must demonstrate it has the key equipment listed below:

No.	Equipment Type and Characteristics	Min. Number Requirement
1.	Excavator with Breaker (>0.50 m3)	2
2.	Motor Grader (> 100 HP)	1
3.	Pneumatic Roller (> 8 Ton)	1
4.	Asphalt Paver with Electronic Sensor	1

Section VII: Bill of Quantities[8]

Notes for Unit Rate Contracts:

Objectives

The objectives of the Bill of Quantities are
(a) to provide sufficient information on the quantities of Works to be performed to enable Bids to be prepared efficiently and accurately; and
(b) when a Contract has been entered into, to provide a priced Bill of Quantities for use in the periodic valuation of Works executed.

In order to attain these objectives, Works should be itemized in the Bill of Quantities in sufficient detail to distinguish between the different classes of Works, or between Works of the same nature carried out in different locations or in other circumstances which may give rise to different considerations of cost. Consistent with these requirements, the layout and content of the Bill of Quantities should be as simple and brief as possible.

Content
The Bill of Quantities should be divided generally into the following sections:
(a) Preamble;
(b) Work Items (grouped into parts);
(c) Day works Schedule;
d) Provisional Sums; and
(d) Summary.

Preamble
The Preamble should indicate the inclusiveness of the unit prices, and should state the methods of measurement which have been adopted in the preparation of the Bill of Quantities and which are to be used for the measurement of any part of the works.

Work Items
The items in the Bill of Quantities should be grouped into sections to distinguish between those parts of the Works which by nature, location, access, timing, or any other special characteristics may give rise to different methods of construction, or phasing of the Works, or considerations of cost. General items common to all parts of the works may be grouped as a separate section in the Bill of Quantities.

Day work Schedule
A Day work Schedule should be included only if the probability of unforeseen work, outside the items included in the Bill of Quantities, is high. To facilitate checking by the Employer of the realism of rates quoted by the Bidders, the Day work Schedule should normally comprise the following:

(a) A list of the various classes of labour, materials, and Constructional Plant for which basic day work rates or prices are to be inserted by the Bidder, together with a statement of the conditions under which the Contractor will be paid for work executed on a day work basis.

[8]In lump sum contracts, delete "Bill of Quantities" and replace with "Schedule of Activities" throughout this section.

(b) Nominal quantities for each item of Day work, to be priced by each Bidder at Day work rates as bid. The rate to be entered by the Bidder against each basic Day work item should include the Contractor's profit, overheads, supervision, and other charges.

Provisional Sums

Provisional Sums included and so designated in the Bill of Quantities shall be expended in whole or in part at the direction and discretion of the Project Manager in accordance with the Conditions of Contract.

Summary

The Summary should contain a tabulation of the separate parts of the Bill of Quantities carried forward, with provisional sums for Day work, for physical (quantity) contingencies, and for price contingencies (upward price adjustment) where applicable.

Preamble of Bill of Quantities

A. General

1. The Bill of Quantities shall be read in conjunction with the Instructions to Bidders, General and Special Conditions of Contract, Technical Specifications, and Drawings.

2. The quantities given in the Bill of Quantities are estimated and provisional, and are given to provide a common basis for bidding. The basis of payment will be the actual quantities of work ordered and carried out, as measured by the Contractor and verified by the Project Manager and valued at the rates and prices bid in the priced Bill of Quantities, where applicable, and otherwise at such rates and prices as the Project Manager may fix within the terms of the Contract.

3. For any item for which measurement is based on records made before or during construction the records shall be prepared and agreed between the Engineer and the Contractor. Should the Contractor carry out such work without the prior agreement of the Engineer, the Engineer may request the Contractor to carry out investigations to confirm the extent of the work and the quantity of work certified for payment shall be solely at the Engineer's discretion. The cost of any such investigation shall be borne by the Contractor.

4. The rates and prices bid in the priced Bill of Quantities shall, except as otherwise provided under the Contract, include all construction equipment, labor, supervision, materials, erection, maintenance, insurance, profit, taxes, and duties, together with all general risks, liabilities, and obligations set out or implied in the Contract.

5. A rate or price shall be entered against each item in the priced Bill of Quantities, whether quantities are stated or not. The cost of items against which the Contractor has failed to enter a rate or price shall be deemed to be covered by other rates and prices entered in the Bill of Quantities.

6. The whole cost of complying with the provisions of the Contract shall be included in the Items provided in the priced Bill of Quantities, and where no Items are provided, the cost shall be deemed to be distributed among the rates and prices entered for the related Items of Work.

7. General directions and descriptions of work and materials are not necessarily repeated nor summarized in the Bill of Quantities. References to the relevant sections of the Contract documentation shall be made before entering prices against each item in the priced Bill of Quantities. The Specification Clause

references where given in the item description of the Bills of Quantities are for the convenience of bidders and generally refer to the principal relevant- specification clause but do not necessarily represent the whole of the specification requirements for the work required within the item. The presence of a Specification clause reference shall not in any way reduce the Bidders obligation to complete work in accordance with all the requirements of the Specification.

8. Provisional Sums included and so designated in the Bill of Quantities shall be expended in whole or in part at the direction and discretion of the Project Manager in accordance with the Conditions of Contract.
9. The method of measurement of completed work for payment shall be in accordance with the Specifications.
10. The abbreviations and symbols used in this Bill of Quantities are:***[Insert as applicable]***

B. Day work Schedule

a)General

1. Work shall not be executed on a day work basis except by written order of the Project Manager. Bidders shall enter basic rates for day work items in the Schedules. These rates shall apply to any quantity of day work ordered by the Project Manager. Nominal quantities have been indicated against each item of day work, and the extended total for day work shall, be carried forward as a Provisional Sum to the Summary Total Bid Amount. Unless otherwise adjusted, payments for day work shall be subject to price adjustment in accordance with the provisions in the Conditions of Contract.

b) Day work Labor

1. In calculating payments due to the Contractor for the execution of day works, the hours for labor will be reckoned from the time of arrival of the labor at the job site to execute the particular item of day work to the time of departure from the job site, but excluding meal breaks and rest periods. Only the time of classes of labor directly doing work ordered by the Project Manager and are competent to perform such work will be measured. The time of gangers (charge hands) actually doing work with the gangs will also be measured but not the time of foremen or other supervisory personnel.
2. The Contractor shall be entitled to payment in respect of the total time that labor is employed on day work, calculated at the basic rates entered by it in the " SCHEDULE OF DAY WORK RATES: 1. LABOR". The rates for labor shall be deemed to cover all costs to the Contractor including (but not limited to) i) the amount of wages paid to such labor, transportation time, overtime, subsistence allowances, ii) any sums paid to or on behalf of such labor for social benefits in accordance with Nepal law, iii) Contractor's profit, overheads, superintendence, liabilities and insurance and iv) charges incidental to the foregoing.

c) Day work Equipment

1. The Contractor shall be entitled to payments in respect of Constructional Plant already on site and employed on day work at the basis rental rates entered by him in the “SCHEDULE OF DAY WORK RATES:2 EQUIPMENT”. The said rates shall be deemed to include due and complete allowance for depreciation, interest, indemnity and insurance, repairs, maintenance, supplies, fuel, lubricant, and other consumables and all overhead, profit and administrative costs related to the use of such equipment. The cost of drivers, operators and assistants also shall be included in the rate of the equipment and no separately payment shall be made for it.
2. In calculating the payment due to the Contractor for Constructional Plant employed on day work, only the actual number of working hours will be eligible for payment, except that where applicable and agreed with the Project Manager, the travelling time from the part of the Site where the Construction Plant was located when ordered by the Project Manager to be employed on day work and the time for return journey there to shall be included for payment.

d) Day work Materials

1. The Contractor shall be entitled to payment in respect of materials used for day work (except for materials for which the cost is included in the percentage addition to labor costs as detailed heretofore), at the rates

entered by him in the "SCHEDULE OF DAY WORK RATES: 3 MATERIALS" and shall be deemed to include overhead charges and profit as follows;

(i) the rates for materials shall be calculated on the basis of the invoiced price, freight, insurance, handling expenses, damage, losses, etc. and shall provide for delivery to store for stockpiling at the Site.

(ii) the cost of hauling materials for use on work ordered to be carried out as day work, from the store or stockpile on the Site to the place where it is to be used also shall be include in the same rate.

Provisional Sums

The estimated cost of specialized work to be carried out, or of special goods to be supplied, by other contractors should be indicated in the relevant part of the Bill of Quantities as a particular provisional sum with an appropriate brief description. A separate procurement procedure is normally carried out by the Employer to select such specialized contractors. To provide an element of competition among the Bidders in respect of any facilities, amenities, attendance, etc., to be provided by the successful Bidder as prime Contractor for the use and convenience of the specialist contractors, each related provisional sum should be followed by an item in the Bill of Quantities inviting the Bidder to quote a sum for such amenities, facilities, attendance, etc.

Bill of Quantities

Item No.	Description	Unit	Quantity	Unti Rate (NPR) In Figure	Unit Rate (NPR) In words
PART A : General					
A1.01	Insurances for the loss of damage to works, plant, material, equipment, property and third party property and person, personnel injury or death all complete, as per technical specification .[SP/SS 100]	Job	1.00		
A1.02	Providing laboratory space, furniture, laboratory equipment, human resources, transportation facilities, maintaining and operating, etc. of the material testing laboratory at site and off-site(including third party), additional tests if any required as per technical specification. The furniture and equipment of the lab shall remain the property of the Contractor upon completion of the contract, as per technical specification. [SP/SS 504]	Month	30.00		
A1.03	Routine/Regular Maintenance of road during construction and defect liability/notification period, as per technical specification and as per instruction of Engineer etc. [SP/SS 109]	Km-Mon	168.00		
A1.04	Providing and installation of site information notice board with size of 1.8*1.2m, as per technical specification. [SP/SS 110]	Nos	2.00		
A1.05	Prepare and supply of project record (video documentary) of the site before, during and after the site works as per technical specification [SP/SS 116]	Set	1.00		

A1.06	GIS Data Creation: Preparation and submission of GIS database showing newly constructed road, drainage structures, existing utilities (electrical, telecommunication, water and sewer lines) in a format suitable for transferring to GIS database at the completion, as per technical specification and instruction of Engineer all complete [SS/SP 100]	Job	1.00		
PART B: ROAD WORKS					
B1 SITE CLEARANCE					
B 1.01	Clearing and grubbing road land of all categories including removal of anthills, uprooting rank vegetation, grass, bushes, shrubs, saplings and trees girth up to 300 mm, removal of stumps of trees cut earlier and disposal of unserviceable material and stacking of serviceable material to be used or auctioned, up to a lead to Environmental Safe Tipping Site including removal and disposal of top organic soil as per Drawing and Technical Specification .[SP/SS 201]	m^2	40,547.00		
	Total of Part B1- Carried to summary				
B2 EARTHWORK					
B2.01	Roadway Excavation in all types of soil as per drawing and technical specification, including removal of stumps and other deleterious matter, transportation and disposal of excavated materials at environmentally safe tipping sites, dewatering, etc. all complete as per Drawings and Standard Specifications. [SP/SS 905 and 906]	m^3	50,167.46		
B2.02	Earthwork in excavation of foundation of structures in all type of soil including construction of shoring and bracing, dewatering, removal of stumps and other deleterious matter , backfilling with approved material and disposal of surplus excavated materials at environmentally safe tipping sites as per drawings and technical specifications. [SP/SS 907, 908]	m^3	21,786.00		

B2.03	Providing & Filling with suitable soil for plantation in Median and Island with approved material with all lifts and leads, transporting to site, spreading, grading to required slope to meet requirement as per Drawing and Technical Specifications. [SP/SS 1205]	m^3	14,069.00		
B2.05	Providing , laying and fixing of geotextile (filter fabrics), as per Drawing and Technical Specification. [SP/SS 2400,2600]	m^2	10,518.00		
B2.06	Construction of embankment with approved material with all lifts and leads, providing, laying, spreading and compacting in layers to meet requirement all complete as per Drawing and Technical Specifications. [SP/SS 909, 910]	m^3	25,787.00		
B3 PAVEMENT WORKS					
B3.01	**Sub- Grade**				
a	Scarifying the existing bituminous road surface and disposing unusable materials including transportation at safe tipping site etc. all complete as per specification [SP/SS 1003]	m^2	46,675.00		
b	Scarifying the existing Base Course and screening, sorting out reusable materials and disposing unusable materials including transportation at safe tipping site etc. all complete as per specification. [SP/SS 1003]	m^2	46,675.00		
c	Preparation of sub grade to designed level, grade and camber including watering and compaction etc all complete as per Drawing and Technical Specification. [SP/SS1003]	m^2	84,331.17		
B3,02	**Sub-base and Base**				

a.	Providing and laying of Scarified Base Course as granular sub-base of required grading on prepared surface, mixing at OMC, and compacted to designed grade, line, level, super-elevation, camber and desired density etc all complete as per Drawing and Technical specification [SP/SS 1201]	m^3	4,667.50		
b.	Providing and laying of granular sub-base of required grading on prepared surface, mixing at OMC, and compacted to designed grade, line, level, super-elevation, camber and desired density etc all complete as per Drawing and Technical specification. [SP/SS 1201]	m^3	51,793.12		
c.	Providing, laying, spreading and compacting graded stone aggregate to wet mix macadam specification including premixing the Material with water at OMC laying in uniform layers in base course on well prepared surface and compacting to achieve required density as per Drawing and Technical Specifications. [SP/SS 1208]	m^3	28,195.94		
B3.03	**Prime Coat**				
a.	Providing and applying prime coat with hot bitumen (including cutter)on prepared surface of granular base including cleaning of road surface and spraying at rate by mechanical means as per Technical specification. [SP/SS 1302]	Lit.	104,069.85		
B3.04	**Tack Coat**				
a.	Providing and applying tack coat with hot Bitumen at specified rate on the prepared surfaces including cleaning as per Technical Speciation, etc. all complete. [SP/SS 1302]	Lit.	126,623.12		
B3.05	**Asphalt Concrete Work**				
a.	Providing and laying dense bituminous macadam(Binder Courses) using crushed aggregates of specified grading, premixed with bituminous binder and filler as per Drawing and Technical Specifications. [SP/SS 1308]	m^3	10,330.00		

b	Providing and laying Bituminous concrete/ Asphalt concrete(Wearing Course) for cycle lane using crushed aggregates of specified grading, premixed with bituminous binder and filler as per Drawing and Technical Specifications. [SP/SS 1309]	m^3	382.80		
c	Providing and laying Bituminous concrete/ Asphalt concrete(Wearing Course) using crushed aggregates of specified grading, premixed with bituminous binder and filler as per Drawing and Technical Specifications. [SP/SS 1309]	m^3	6,321.79		
B4 ROAD STRUCTURES					
B4.01 RETAINING STRUCTURES					
a.	Providing, laying and levelling of dry stone soling works and packing with smaller stones in the foundation/floor etc. all complete as per specification. [SP/SS 3111]	m^3	669.98		
b.	Providing, mixing, placing in position, vibrating, compacting, finishing, curing of Plain Cement Concrete of grade M 15 all complete including formwork as per Drawing and Technical Specifications. Nominal Aggregate Size 40mm [SP/SS 2000]	m^3	446.65		
c.	Providing and placing plum concrete (Boulder mixed Concrete) with 60% M15/40 concrete and 40% boulders/stones as per specification, using concrete mixer and vibrator Including formwork, curing, testing etc. all complete as per specification and drawing. [SP/SS 3113]	m^3	5,029.97		
d	Providing, laying, fixing in positions of Geo-textile (filter fabrics) as per Drawing and Technical Specification. [SP/SS 2404]	m^2	375.00		
B4.02 DRAINAGE WORKS					
i)	**HUMEPIPE LAYING**				

a.	Earthwork in excavation of foundation of structures in all type of soil including construction of shoring and bracing, dewatering, removal of stumps and other deleterious matter , backfilling with approved material and disposal of surplus excavated materials at environmentally safe tipping sites as per drawings and technical specifications. [SP/SS 907, 908]	m^3	29,400.00		
b.	Providing and Laying Reinforced cement concrete 1200 mm internal diameter NP3 Flush jointed pipe including fixing with cement mortar 1:2 as per Drawing and Technical Specifications.[SP/SS 701]	Rm	6,000.00		
c	Providing, mixing, placing in position, vibrating, compacting, finishing, curing of Plain Cement Concrete of grade M 15/40 all complete including formwork as per Drawing and Technical Specifications. [SP/SS 2000]	m^3	8,101.84		
ii)	**RECTANGULAR DRAIN**				
a.	Providing, laying and levelling flat 1st class brick soling all complete as per Drawing and Technical Specification.[SP/SS 3112]	m^2	18,416.00		
b.	Providing, mixing, placing in position, vibrating, compacting, finishing, curing of Plain Cement Concrete of grade M 15/40 all complete including formwork as per Drawing and Technical Specifications. [SP/SS 2000]	m^3	1,806.00		
c.	Providing, mixing, placing in position, vibrating, compacting, finishing, curing of Reinforced Cement Concrete of grade M 25 all complete including formwork as per Drawing and Technical Specifications. [SP/SS 2000]	m^3	162.00		
d.	Providing, mixing, placing in position, vibrating, compacting, finishing, curing of Reinforced Cement Concrete of grade M 30 all complete including formwork as per Drawing and Technical Specifications. [SP/SS 2000]	m^3	11,226.00		

e	Providing and laying Reinforcement Fe 500 including cutting, bending, binding, fixing in position etc. all complete as per drawing and technical specification [SP/SS 2014]	Ton	684.47		
iii)	**BRICK MANHOLE CONSTRUCTION**				
a.	Earthwork in excavation of foundation of structures in all type of soil including construction of shoring and bracing, dewatering, removal of stumps and other deleterious matter , backfilling with approved material and disposal of surplus excavated materials at environmentally safe tipping sites as per drawings and technical specifications. [SP/SS 907, 908]	m^3	3,267.74		
b.	Providing, laying and levelling flat 1st class brick soling all complete as per Drawing and Technical Specification.[SP/SS 3112]	m^2	933.64		
c.	Providing, mixing, placing in position, vibrating, compacting, finishing, curing of Plain Cement Concrete of grade M 15/40 all complete including formwork as per Drawing and Technical Specifications. [SP/SS 2000]	m^3	149.53		
d.	Providing and laying first class Brick Masonry in Cement sand mortar (1:4) in Foundation / structure,mixing mortar with concrete mixture, etc all complete , as per Drawing and Technical Specifications.[SP/SS 2500]	m^3	1,036.04		
e.	Providing and applying 12.5 mm thick cement plaster including 1:4 cement sand mortar mixing, scaffolding, curing etc. complete as per drawing and technical specification. .[SP/SS 2500]	m^2	925.03		
f.	Providing, mixing, placing in position, vibrating, compacting, finishing, curing of Reinforced Cement Concrete of grade M 20 all complete including formwork as per Drawing and Technical Specifications. [SP/SS 2000]	m^3	16.32		
g.	Providing and fixing 16mm Φ GI metal steps(ring) with cement concrete @30 cm c/c for inspection of manhole all complete as per Drawing and Technical Specifications [SP/SS 2000]	Kg	2,446.63		

h.	Providing and fixing C.I. Manhole cover of 24 " (600mm) dia. (Heavy duty 208 kg) with frame at requird level including concreting nut bolting etc. all complete as per drawing and specification etc. [SP/SS 631]	Nos	163.00		
iv)	**BOX CULVERT**				
a.	Earthwork in excavation of foundation of structures in all type of soil including construction of shoring and bracing, dewatering, removal of stumps and other deleterious matter , backfilling with approved material and disposal of surplus excavated materials at environmentally safe tipping sites as per drawings and technical specifications. [SP/SS 907, 908]	m^3	235.17		
b.	Providing, laying and levelling of dry stone soling works and packing with smaller stones in the foundation/floor etc. all complete as per specification. [SP/SS 3111]	m^3	23.51		
c.	Providing, mixing, placing in position, vibrating, compacting, finishing, curing of Plain Cement Concrete of grade M 15/40 all complete including formwork as per Drawing and Technical Specifications. [SP/SS 2000]	m^3	35.46		
d	Providing and placing plum concrete (Boulder mixed Concrete) with 60% M15/40 concrete and 40% boulders/stones as per specification, using concrete mixer and vibrator Including formwork, curing, testing etc. all complete as per specification and drawing. [SP/SS 3113]	m^3	9.45		
e.	Providing, mixing, placing in position, vibrating, compacting, finishing, curing of Reinforced Cement Concrete of grade M 30 all complete including formwork as per Drawing and Technical Specifications. [SP/SS 2000]	m^3	1,266.62		
f.	Providing and laying Reinforcement Fe 500 including cutting, bending, binding, fixing in position etc. all complete as per drawing and technical specification [SP/SS 2014]	Ton	24.84		

g.	Providing suitable material and Back filling with granular material, behind abutment ,wall, wing, wall and return wall etc all complete as per Drawing and Technical Specifications. [SP/SS 908, 910]	m^3	77.61		
B5 ROAD FURNITURE AND TRAFFIC SAFETY MEASURES					
B5.01	**Median, Footpath and Boundary Wall**				
a.	Providing, laying and levelling flat 1st class brick soling all complete as per Drawing and Technical Specification.[SP/SS 3112]	m^2	18,089.00		
b	Providing, mixing, placing in position, vibrating, compacting, finishing, curing of Plain Cement Concrete of grade M 10 all complete including formwork as per Drawing and Technical Specifications. Nominal Aggregate Size 40mm [SP/SS 2000]	m^3	1,809.00		
c	Providing and laying first class Brick Masonry in Cement sand mortar (1:4) in Foundation / structure,mixing mortar with concrete mixture, etc all complete , as per Drawing and Technical Specifications.[SP/SS 2500]	m^3	1,655.00		
d	Providing and applying 12.5 mm thick cement plaster including 1:4 cement sand mortar mixing, scaffolding, curing etc. complete as per drawing and technical specification. .[SP/SS 2500]	m^2	400.00		
e	Providing and laying of M25 precast cement concrete Kerb 35 cm * 20 cm * 30 cm (H*B*L) with 12 mm thick 1:3 cement sand mortar bedding and joints including foundation excavation levelling as per Drawing and Technical Specifications. [SP/SS 1401]	Rm	31,080.00		
f	Providing and Laying of 60mm thick rectangular cement concrete(Grade M25) interlocking block (blended Multi Colour) with dimensions 200mm*100mm*60mm for footpath over 50 mm thick stone dust, all complete. [SP/SS 1400]	m^2	40,744.25		

g	Providing and laying Tactile Matrix Slab (Single Color) with Compressive Strength M25 . 40mm thickness dimension: 400mmx400mmx40mm all complete as per specification. [SP/SS 1400]	m^2	6,216.00		
h	Providing, jointing and laying PE-100,PN6 HDPE pipes with or without collar etc. complete in place as per Drawing andTechnical Specifications.(200 mm outer dia. NS-40) [SP/SS 700, 3100]	Rm	8,108.00		
i.	Providing, jointing and laying PE-100,PN6 HDPE pipes with or without collar etc. complete in place as per Drawing andTechnical Specifications.(110 mm outer dia. NS-40) [SP/SS 700,3100]	Rm	5,000.00		
j	Providing and laying subsurface drain with filter material and perforated PVC pipe of 100 mm internal diameter , closely jointed, perforations ranging from 3 mm to 6 mm depending upon size of material surrounding the pipe, with 150 mm bedding below the pipe and 300 mm cushion above the pipe,. as per Drawing and Specifications [SP/SS 2414]	Rm	3,885.00		
B5.02	**ROAD SAFETY AND TRAFFIC MANAGEMENT WORKS**				
a.	Providing and fixing 60cm. Dia. Circular, 60cm. equilateral traingle and 80cm.x 60cm. rectangular shaped sign (single post) of warning, mandatory and informatory sign board of 2 mm thick MS Sheet with back support angle 75x40x4.8 mm frame fixed firmly fixed to the ground by means of properly designed foundation with M 20 grade cement concrete 300 mm x 300 mm x 300 mm, l as per drawings and Technical Specification/ DOR Publication [SP/SS 1500]	Nos	100.00		
b.	Providing and installation of precast Reinforced cement concrete M15 kilometer-post including painting, printing etc all complete as per Standard Drawings and Technical Specification or as instructed by the Engineer: [SP/SS 1506]	Nos	6.00		

c.	Providing and installation of precast Reinforced cement concrete M15 five kilometer-post including painting, printing etc all complete as per Standard Drawings and Technical Specification or as instructed by the Engineer: [SP/SS 1506]	Nos	2.00		
d.	Providing, fencing and erecting 50 mm dia heavy GI steel pipe railing in 3 rows on precast M 20 grade RCC vertical posts 1.8 metres high (1.2 m above GL) with 3 holes 50 mm dia for pipe, fixed 2 metres center to centre, Painting with Two coat of enamel paint work over primer coat of approved colour and shade in post including cleaning, etc. all complete as per Drawing and Technical Specifications. [SP/SS 3105]	Rm	8,170.00		
e	Providing and Painting two coats after filling the surface with synthetic enamel paint in all shades on Railing post and Kerbs as per the Drawings and the Technical Specifications. [SP/SS 1501]	m^2	18,026.40		
f	Providing and laying Road Marking with hot applied thermoplastic compound (at least 2mm thick) with reflectorizing glass beads on pavement surface as specified in Traffic Sign Manual, as per the Drawings and the Technical Specifications. [SP/SS 1504]	m^2	8,468.00		
B5.03	**STREET LIGHTING WORKS**				
a.	Supply and Installation of 10 sq. mm 2 core, Aluminium, Armoured power cable, Armoured (XLPE insulation) IS marked or equivalent as per IS 7098 part I & part II, IS 1554 part I and part II and IS-694, as per instruction of site engineer.[SP/SS 1500]	Rm	13,378.20		

b	Providing and fixing Street Lighting Systems automatically switched on and off and auto dimming opetion, including excavation, fixing in position and concreting (including M25/20 concrete,reinforcement as schedule - 1.40m*0.50m*0.50m as per drawing) etc. all complete as per specification and drawing in median,footpath and tapered portion of intersection etc all complete as per specification. (Specification :- 1.8 meter overhang Twin Arm if fixed in the medain and on one side if fixed on the footpath, 2 X 100 Watt LED AC Street light with auto on-off switch and auto dimming option system, heavy octagonal conical Pole of Height 10 meter, no. of side-8, Top dia.-90 mm, base dia.-200 mm,wall thickness minimum-3 mm,Base plate of (300*300*20 mm), anchor of base plate with 24 mm. dia bolt of 750 mm length, door length (opening)-500mm, Galvanized pole with all electrical accessories fittings system etc. all complete). All the specification should be fulfilled and satisfied by the manufacturer and is the responsibility of the contractor - should submit for approval prior to the supply and Installation of street light all complete as per specification and as directed by the Engineer. [SP/SS 1500]	Nos.	303.00		
c	Providing, jointing and laying PE-100,6 kg/cm2 HDPE pipes with or without collar etc. complete in place as per Drawing andTechnical Specifications.(32 mm outer dia. NS-40) [SP/SS 700,3100]	Rm	4,054.00		
PART C: ENVIRONMENTAL MITIGATION WORKS AND BIO-ENGINEERING					
C1.01	Provision of safety clothing and equipment, first aid/medical facilities and other safety measure for labour and contractot's employees including Employer's personnel and visitors [SP/SS 111]	Month	30.00		

C1.02	Providing and maintaining sturdy barricades, fences and caution signs as per Drawings or as instructed by the Engineer, at all active sites. [SP/SS 100]	Month	30.00		
C1.03	Controlling air pollution through water sprinkling as instructed by the Engineer.[SP/SS 111]	Km-Mon	120.00		
C1.04	Providing & laying Grass turfing work including cutting, transporting, placing in position and water sprinkling etc all complete.[SP/SS 2800]	m^2	16,607.50		
PART D: DAY WORKS SCHEDULE OF DAY WORKS					
D1.01	**Labour**				
a.	Skilled labour (Mason, Carpenter, mechanics etc.)	per-day	100.00		
b.	Unskilled labour (Including Unskilled, helpers, assistant operators etc.)	per-day	200.00		
D1.02	**Equipment with operators**				
a.	Tipper/truck > 5 Cu m capacity	Hr	300.00		
c.	Wheel Loader > 2.5 Cum. Capacity	Hr	200.00		
d	Excavator With Breaker and Bucket >0.75 Cum. Capacity	Hr	300.00		
D1.03	**Material**				
a.	Concrete NP3 Pipe 300mm Diameter	Rm	100.00		
b.	Concrete NP3 Pipe 450mm Diameter	Rm	100.00		
c.	HDPE pipe different sizes	Kg	2,500.00		
	Total of Part D-Carried to summary				
PART E: PROVISIONAL SUMS					

E1.01	Relocation of utilities/services including both major and minor infrastructures i.e Electric poles, irrigation canal, pipes, cables, Temples, Mosque, Church, Graveyards, compound wall & any other items may needed as per site conditions. [SP/SS 3100]	PS	1.00	6,50,00,000	NRs Six crore fifty lakh only.
E1.02	Compensatory tree plantation as per specification and rules for department of forest with care up to the period of DLP in the location as per instruction of the engineer as per technical specification [SP/SS 3100]	PS	1.00	20,00,000	NRs Twenty Lakh only.
E1.03	Payment of Electric charges of the street lights within DLP period [SP/SS 3100]	PS	1.00	20,00,000	NRs Twenty Lakh only.
E1.04	Traffic Safety works, Design and construction of intersections and junctions as per specification [SP/SS 3100]	PS	1.00	1,00,00,000	NRs One Crore only.

Part III: CONDITIONS OF CONTRACT AND CONTRACT FORMS

Table of Clauses

A. General 109

1. Definitions 109
2. Interpretation 111
3. Language and Law 112
4. Contract Agreement 112
5. Assignment 112
6. Care and Supply of Documents 112
7. Confidential Details 113
8. Compliance with Laws 113
9. Joint and Several Liability 113
10. Project Manager's Decisions 114
11. Delegation 114
12. Communications 114
13. Subcontracting 114
14. Other Contractors 115
15 Personnel and Equipment 115
16. Employer's and Contractor's Risk 116
17. Employer's Risks 116
18. Contractor's Risks 116
19. Insurance 116
20. Site Investigation Reports 117
21. Contractor to Construct the Works 117
22. The Works to Be Completed within intended Completion Date 117
23. Design by contractor and Approval by the Project Manager 117
24. Safety, Security and Protection of the Environment 118
25. Discoveries 118
26. Possession of the Site 119
27. Access to the Site 119
28. Instructions, Inspections and Audits 119
29. Dispute Settlement 119
30. Procedures for Disputes 119

B1. Staff and Labor 119

31. Forced Labor 119
32. Child Labor 120

33.Non-discrimination and Equal Opportunity 120

B. Time Control 120

34. Program 120
35. Extension of the Intended Completion Date 121
36. Acceleration 121
37. Delays Ordered by the Project Manager 121
38. Management Meetings 121
39. Early Warning 122

C. Quality Control 122

40.Identifying Defects 122
41. Tests 122
42. Correction of Defects 122
43.Uncorrected Defects 123

D. Cost Control 123

44. Contract Price 123
45. Changes in the Contract Price 123
46. Variations 123
47. Cash Flow Forecasts 124
48. Payment Certificates 124
49. Payments 125
50. Compensation Events 125
51. Tax 126
52. Currency 126
53. Price Adjustment 126
54. Retention 128
55. Liquidated Damages 129
56. Bonus 129
57. Advance Payment 129
58. Securities 130
59. Dayworks 131
60. Cost of Repairs 131

F. Force Majeure 131

61. Definition of Force Majeure 131
62. Notice of Force Majeure 132
63. Duty to Minimize Delay 132

64. Consequences of Force Majeure 132
65. Force Majeure Affecting Subcontractor 133
66. Optional Termination, Payment and Release 133
67. Release from Performance 133
G. Finishing the Contract 134
68. Completion 134
69. Taking Over 134
70. Final Account 134
71. Operating and Maintenance Manuals 135
72. Termination 135
73. Fraud and Corruption 136
74. Black Listing 137
75. Payment upon Termination 137
76. Property 138
77. Release from Performance 138
78.Suspension of DP Loan/Credit/ Grant 138
79. Eligibility 138
80. Project Manager's Duties and Authorities 139
81. Quarries and Spoil Dumps 139
82. Local Taxation 139
83. Value Added Tax 139
84. Income Taxes on Staff 140
85. Duties, Taxes and Royalties 140
86. Member of Government, etc, not Personally Liable 140
87. Approval of Use of Explosives 140
88 Compliance with Regulations for Explosives 140
89. Permission for Blasting 140
90. Records of Explosives 141
91.Traffic Diversion 141
92 Social Security Fund 141

Section VIII: General Conditions of Contract

Road Division Hetauda

Upgrading of Tribhuvan Rajpath from Ghantaghar to Gandak Chowk Road, Parsa (Chainage 04+000 to 08+054)

Contract No.: TRP/RDHTD/33701130/083/84-27

General Conditions of Contract

This Section provides the General Conditions of Contract that will apply to the Contract for which the Biding document is issued.

A. General	
1. Definitions	1.1 Boldface type is used to identify defined terms. (a) The **Accepted Contract Amount** means the amount accepted in the Letter of Acceptance for the execution and completion of the Works and the remedying of any defects. (b) The **Activity Schedule** is a schedule of the activities comprising the construction, installation, testing, and commissioning of the Works in a lump sum contract. It includes a lump sum price for each activity, which is used for valuations and for assessing the effects of Variations and Compensation Events. (c) **Bill of Quantities** means the priced and completed Bill of Quantities forming part of the Bid. (d) **Compensation Events** are those defined in GCC 50 hereunder. (e) The **Completion Date** is the date of completion of the Works as certified by the Project Manager, in accordance with GCC 68.1. (f) The **Contract** is the Contract between the Employer and the Contractor to execute, complete, and maintain the Works. It consists of the documents listed in GCC 2.3 below. (g) The **Contractor** is the party whose Bid to carry out the Works has been accepted by the Employer. (h) The **Contractor's Bid** is the completed bidding document submitted by the Contractor to the Employer. (i) The **Contract Price** is the Accepted Contract Amount stated in the Letter of Acceptance and thereafter as adjusted in accordance with the Contract. (j) **Days** are calendar days; months are calendar-months. (k) **Dayworks** are varied work inputs subject to payment on a time basis for the Contractor's employees and Equipment, in addition to payments for associated Materials and Plant. (l) A **Defect** is any part of the Works not completed in accordance with the Contract. (m) The **Defects Liability Certificate** is the certificate issued by Project Manager upon correction of defects by the Contractor. (n) The **Defects Liability Period** is the period calculated from the

	Completion Date where the Contractor remains responsible for remedying defects. (o) **Drawings** include calculations and other information provided or approved by the Project Manager for the execution of the Contract. (p) The **Employer** is the party who employs the Contractor to carry out the Works, as **specified in the SCC**. (q) **Equipment** is the Contractor's machinery and vehicles brought temporarily to the Site to construct the Works. (r) **Force Majeure** means an exceptional event or circumstance: which is beyond a Party's control; which such Party could not reasonably have provided against before entering into the Contract; which, having arisen, such Party could not reasonably have avoided or overcome; and, which is not substantially attributable to the other Party. (s) The **Initial Contract Price** is the Contract Price listed in the Employer's Letter of Acceptance. (t) **In writing** or **written** means hand written, type written, printed or electronically made, and resulting in permanent record. (u) The **Intended Completion Date** is the date on which it is intended that the Contractor shall complete the Works. The Intended Completion Date is **specified in the SCC**. The Intended Completion Date may be revised only by the Project Manager by issuing an extension of time or an acceleration order. (v) **Letter of Acceptance** means the formal acceptance by the Employer of the Bid and denotes the formation of the contract at the date of acceptance. (w) **Materials** are all supplies, including consumables, used by the Contractor for incorporation in the Works. (x) **Party** means the Employer or the Contractor, as the context requires. **(**y) **SCC** means Special Conditions of Contract (aa) **Plant** is any integral part of the Works that shall have a mechanical, electrical, chemical, or biological function. (bb) The **Project Manager** is the person **named in the SCC** (or any other competent person appointed by the Employer and notified to the Contractor, to act in replacement of the Project Manager) who is responsible for supervising the execution of the Works and administering the Contract. (cc) **Retention Money** means the aggregate of all monies retained by the Employer pursuant to GCC 54.1. (dd) **Schedules** means the document(s) entitled schedules,

	completed by the Contractor and submitted with the Letter of Bids, as included in the Contract. Such document may include the Bill of Quantities, data, lists, and schedules of rates and/or prices. (ee) The **Site** is the area defined as such in the SCC (ff) **Site Investigation Reports** are those that were included in the bidding documents and are factual and interpretative reports about the surface and subsurface conditions at the Site. (gg) **Specification** means the Specification of the Works included in the Contract and any modification or addition made or approved by the Project Manager. (hh) The **Start Date** is given i**n the SCC**. It is the latest date when the Contractor shall commence execution of the Works. It does not necessarily coincide with any of the Site Possession Dates. (ii) A **Subcontractor** is a person or corporate body who has a Contract with the Contractor to carry out a part of the work in the Contract, which includes work on the Site. (jj) **Temporary Works** are works designed, constructed, installed, and removed by the Contractor that are needed for construction or installation of the Works. (kk) A **Variation** is an instruction given by the Project Manager which varies the Works. (ll) The **Works** are what the Contract requires the Contractor to construct, install, and turn over to the Employer, as **defined in the SCC**.
2. Interpretation	2.1 In interpreting these GCC, singular also means plural, male also means female or neuter, and the other way around. Headings have no significance. Words have their normal meaning under the language of the Contract unless specifically defined. The Project Manager shall provide instructions clarifying queries about these GCC.
	2.2 If sectional completion is **specified in the SCC**, references in the GCC to the Works, the Completion Date, and the Intended Completion Date apply to any Section of the Works (other than references to the Completion Date and Intended Completion Date for the whole of the Works).
	2.3 The documents forming the Contract shall be interpreted in the following order of priority: (a) Contract Agreement, (b) Letter of Acceptance, (c) Letters of Technical Bid and Price Bid,

	(d) Special Conditions of Contract, (e) General Conditions of Contract, (f) Specifications, (g) Drawings, (h) Bill of Quantities (or Schedules of Prices for lump sum contracts), and (i) Any other document **listed in the SCC** as forming part of the Contract.
3. Language and Law	3.1 The language of the Contract and the law governing the Contract are **stated in the SCC**.
	3.2. Throughout the execution of the Contract, the Contractor shall comply with the import of goods and services prohibitions in the Employer's country when (a) by an act of compliance with a decision of the United Nations Security Council taken under Chapter VII of the Charter of the United Nations, the Employer's Country prohibits any import of goods from, or any payments to, a particular country, person, or entity. Where the employer's country prohibits payments to a particular firm or for particular goods by such an act of compliance, that firm may be excluded.
4. Contract Agreement	4.1 The Parties shall enter into a Contract Agreement within 15 days after the Contractor receives the Letter of Acceptance, unless the Special Conditions establish otherwise. The Contract Agreement shall be based upon the attached Contract forms in Section X.
	4.2 Without altering the basic nature or scope of work, the contract may be amended upon mutual written consent as per prevailing Public Procurement Law.
5. Assignment	5.1 Neither Party shall assign the whole or any part of the Contract or any benefit or interest in or under the Contract. However, either Party (a) may assign the whole or any part with the prior agreement of the other Party, at the sole discretion of such other Party; and (b) may, as security in favor of a bank or financial institution, assign its right to any moneys due, or to become due, under the Contract.
6. Care and Supply of Documents	6.1 The Specification and Drawings shall be in the custody and care of the Employer. Unless otherwise stated in the Contract, one copy of the Contract and of each subsequent Drawing shall be supplied to the Contractor, who may make or request further copies at the cost of the Contractor.
	6.2 Each of the Contractor's Documents shall be in the custody and

	care of the Contractor, unless and until taken over by the Employer. Unless otherwise stated in the Contract, the Contractor shall supply to the Engineer six copies of each of the Contractor's Documents.
	6.3 The Contractor shall keep, on the Site, a copy of the Contract, publications named in the Specification, the Contractor's Documents (if any), the Drawings and Variations and other communications given under the Contract. The Employer's Personnel shall have the right of access to all these documents at all reasonable times.
	6.4 If a Party becomes aware of an error or defect in a document which was prepared for use in executing the Works, the Party shall promptly give notice to the other Party of such error or defect.
7. Confidential Details	7.1 The Contractor's and the Employer's Personnel shall disclose all such confidential and other information as may be reasonably required in order to verify the Contractor's compliance with the Contract and allow its proper implementation.
	7.2 Each of them shall treat the details of the Contract as private and confidential, except to the extent necessary to carry out their respective obligations under the Contract or to comply with applicable Laws. Each of them shall not publish or disclose any particulars of the Works prepared by the other Party without the previous agreement of the other Party. However, the Contractor shall be permitted to disclose any publicly available information, or information otherwise required to establish his qualifications to compete for other projects.
	7.3 Notwithstanding the above, the Contractor may furnish to its Subcontractor(s) such documents, data and other information it receives from the Employer to the extent required for the Subcontractor(s) to perform its work under the Contract, in which event the Contractor shall obtain from such Subcontractor(s) an undertaking of confidentiality similar to that imposed on the Contractor under this Clause.
8. Compliance with Laws	8.1 The Contractor shall, in performing the Contract, comply with applicable Laws of Nepal.
9. Joint and Several Liability	9.1 If the Contractor is a joint venture of two or more entities, all such entities shall be jointly and severally liable to the Employer for the fulfillment of the provisions of the Contract, and shall designate one of such persons to act as a leader with authority to bind the joint venture. The contractor shall not handover the responsibility of the contract to any one member or some members of Joint Venture or any other parties, not involved in the contract. The composition or the constitution of the joint venture shall not be altered without the prior consent of the

	Employer.
10. Project Manager's Decisions	10.1 Except where otherwise specifically stated, the Project Manager shall decide contractual matters between the Employer and the Contractor in the role representing the Employer.
11. Delegation	11.1 The Project Manager may delegate any of his duties and responsibilities to other people after notifying the Contractor, and may cancel any delegation after notifying the Contractor.
12. Communications	12.1 Communications between parties that are referred to in the Conditions shall be effective only when in writing. Wherever these Conditions provide for the giving or issuing of approvals, certificates, consents, determinations, notices and requests, these communications shall be: (a) in writing and delivered by hand (against receipt), sent by mail or courier, or transmitted using any of the agreed systems of electronic transmission as **stated in the SCC**; and (b) delivered, sent or transmitted to the address for the recipient's communications as stated in the Contract. However: (i) if the recipient gives notice of another address, communications shall thereafter be delivered accordingly; and (ii) if the recipient has not stated otherwise when requesting an approval or consent, it may be sent to the address from which the request was issued. Approvals, certificates, consents and determinations shall not be unreasonably withheld or delayed.
	12.2 A Notice shall be effective when delivered or on the Notice's effective date, whichever is later.
13. Subcontracting	13.1 **For GON Funded:** A list of approved Subcontractors including its value/works is included as Article 2 (k) of Contract Agreement Approval by the Employer for any of the Subcontractors shall not relieve the Contractor from any of its obligations, duties, or responsibilities under the contract. **For DP Funded:** The Contractor may subcontract with the approval of the Project Manager, but may not assign the Contract without the approval of the Employer in writing. Subcontracting shall not alter the Contractor's obligations. Bidders may propose subcontracting up to the percentage of total value of contracts as

	specified in the SCC. The Sub contractor shall meet the qualification requirement as specified **in SCC.** 13.2 The contractor shall give prior notice to the Employer clearly specifying the nature, scope, and responsibilities of the work to be performed, to engage other subcontractors, material suppliers, equipment suppliers, service providers, or other persons or entities during the implementation of the contract. 13.3 Before notifying the Employer as per GCC 13.2, the contractor shall enter into a written agreement with the subcontractors, material suppliers, equipment suppliers, service providers, or other persons or entities clearly specifying the scope of work, responsibilities, quality requirements, duration, payment terms, security, labor-related obligations, and conditions relating to performance of the work. 13.4 Any subcontracting arrangement made in accordance with GCC 13.2 shall not relieve the Contractor of any of its obligations or liabilities under the Contract. 13.5 The contractor shall provide the Employer with details of the payments made to the subcontractors, material suppliers, equipment suppliers, service providers, or other persons or entities engaged under GCC 13.1 and/or GCC 13.2. 13.6 If the contractor is found not to have made payment to the subcontractor, material suppliers, equipment suppliers, service providers, or other persons or entities engaged under GCC 13.1 and/or GCC 13.2 in accordance with the terms of the agreement, the Employer may determine the amount payable to such subcontractor, material suppliers, equipment suppliers, service providers, or other persons or entities and make payment to them from any remaining dues to be paid to the contractor, retention money, or forfeited performance security.
14. Other Contractors	14.1 The Contractor shall cooperate and share the Site with other contractors, public authorities, utilities, and the Employer between the dates given in the Schedule of Other Contractors, **as referred to in the SCC**. The Contractor shall also provide facilities and services for them as described in the Schedule. The Employer may modify the Schedule of Other Contractors, and shall notify the Contractor of any such modification
15 Personnel and Equipment	15.1 The Contractor shall employ the key personnel and use the equipment identified in its Bid to carry out the Works, or other personnel and equipment approved by the Project Manager. The Project Manager shall approve any proposed replacement of key personnel and equipment only if their relevant qualifications or characteristics are substantially equal to or better than those proposed in the Bid.
	15.2 If the Project Manager asks the Contractor to remove a person who is a member of the Contractor's staff or work force, stating the

	reasons, the Contractor shall ensure that the person leaves the Site within seven days and has no further connection with the work in the Contract.
	15.3 If the Employer, Project Manager, or Contractor determines, that any employee of the Contractor be determined to have engaged in corrupt, fraudulent, collusive, coercive, or other prohibited practices during the execution of the Works, then that employee shall be removed in accordance with Clause 15.2 above.
16. Employer's and Contractor's Risk	16.1 The Employer carries the risks which this Contract states are Employer's risks, and the Contractor carries the risks which this Contract states are Contractor's risks.
17. Employer's Risks	17.1 From the Start Date until the Defects Liability Certificate has been issued, the following are Employer's risks: (a) The risk of personal injury, death, or loss of or damage to property (excluding the Works, Plant, Materials, and Equipment), which are due to (i) use or occupation of the Site by the Works or for the purpose of the Works, which is the unavoidable result of the Works or (ii) negligence, breach of statutory duty, or interference with any legal right by the Employer or by any person employed by or contracted to him except the Contractor. (b) The risk of damage to the Works, Plant, Materials, and Equipment to the extent that it is due to a fault of the Employer or in the Employer's design, or due to war or radioactive contamination directly affecting the country where the Works are to be executed.
	17.2 From the Completion Date until the Defects Liability Certificate has been issued, the risk of loss of or damage to the Works, Plant, and Materials is an Employer's risk except loss or damage due to (a) a Defect which existed on the Completion Date, (b) an event occurring before the Completion Date, which was not itself an Employer's risk, or (c) the activities of the Contractor on the Site after the Completion Date.
18. Contractor's Risks	18.1 From the Starting Date until the Defects Liability Certificate has been issued, the risks of personal injury, death, and loss of or damage to property (including, without limitation, the Works, Plant, Materials, and Equipment) which are not Employer's risks are Contractor's risks.
19. Insurance	19.1 The Contractor shall provide insurance in the joint names of the Employer and the Contractor from the Start Date to the end of the Defects Liability Period, in the amounts and deductibles **stated in**

	the SCC for the following events which are due to the Contractor's risks: (a) loss of or damage to the Works, Plant, and Materials; (b) loss of or damage to Equipment; (c) loss of or damage to property (except the Works, Plant, Materials, and Equipment) in connection with the Contract; and (d) Personal injury or death.
	19.2 Policies and certificates for insurance shall be delivered by the Contractor to the Project Manager for the Project Manager's approval before the Start Date. All such insurance shall provide for compensation to be payable in the proportions of Nepalese Rupees required to rectify the loss or damage incurred.
	19.3 If the Contractor does not provide any of the policies and certificates required, the Employer may affect the insurance which the Contractor should have provided and recover the premiums the Employer has paid from payments otherwise due to the Contractor or, if no payment is due, the payment of the premiums shall be a debt due.
	19.4 Alterations to the terms of insurance shall not be made without the approval of the Project Manager.
	19.5 Both parties shall comply with any conditions of the insurance policies.
20. Site Investigation Reports	20.1 The Contractor, in preparing the Bid, shall rely on any Site Investigation Reports referred to **in the SCC**, supplemented by any information available to the Contractor.
21. Contractor to Construct the Works	21.1 The Contractor shall construct and install the Works in accordance with the Specifications and Drawings.
22. The Works to Be Completed within intended Completion Date	22.1 The Contractor may commence execution of the Works on the Start Date and shall carry out the Works in accordance with the Program submitted by the Contractor, as updated with the approval of the Project Manager, and complete them within the intended Completion Date.
23. Design by contractor and Approval by the Project Manager	23.1 The contractor shall be responsible for the design of permanent works as **specified in SCC**.
	23.2 Contractor shall be responsible for design of the Temporary Works. The Contractor shall submit Specifications and Drawings showing the proposed Temporary Works to the Project Manager, for his approval.
	23.3 All Drawings prepared by the Contractor for the execution of the

	temporary or permanent Works, shall be subject to prior approval by the Project Manager before their use.
	23.4 The Project Manager's approval shall not alter the Contractor's responsibility for design of temporary works.
24. Safety, Security and Protection of the Environment	24.1 The Contractor shall, throughout the execution, and completion of the works and remedying of any defects therein: a. Have full regard for the safety of all persons entitled to be upon the site and keep the site (so as the same is under his control) and the works (so far as the same are not completed or occupied by the Employer) in an orderly state appropriate to the avoidance of danger to such persons. b. Provide and maintain at his own cost all lights, guards, fencing, warning signs and watching, when necessary or required by the Project Manager or by any duly constituted authority, for the protection of the Works of for the safety and convenience of the public or others. c. Take all reasonable steps to protect the environment on and off the site and to avoid damage or nuisance to persons or to property of the public or others resulting from pollution, noise or other causes arising as a consequence of his methods of operation. d. Ensure that any cut or fill slopes are planted in grass or other plant cover as soon as possible to protect them from erosion. e. Any spoil or material removed from drains shall be disposed of to designated stable tipping areas as directed by the Project Manager. f. Shall not use fuel wood as a means of heating during the processing or preparation of any materials forming part of the works. g. The Project Manager shall have the power to disallow any working practice or activity of the Contractor or direct that such practices or activities be modified should the Project Manager consider, on the advice of the relevant Government Departments, that the practices or activities will be harmful to wildlife. h. Provide on the Site such lifesaving apparatus as may be appropriate and an adequate and easily accessible first aid outfit or such outfits as may be required by any government ordinance, factory act, etc., subsequently published and amended from time to time.
	24.2 The Contractor shall comply with the Employer's Occupational Health and Safety (OHS) Policy, Guideline and/or Operating Manual, if any, **as specified in the SCC.**
25. Discoveries	25.1 Anything of historical or other interest or of significant value unexpectedly discovered on the Site shall be the property of the employer. The Contractor shall notify the Project Manager of such discoveries and carry out the Project Manager's instructions for

	dealing with them.
26. Possession of the Site	26.1 The Employer shall give possession of all parts of the Site to the Contractor. If possession of a part is not given by the date **stated in the SCC**, the Employer shall be deemed to have delayed the start of the relevant activities, and this shall be a Compensation Event.
27. Access to the Site	27.1 The Contractor shall allow the Project Manager and any person authorized by the Project Manager access to the Site and to any place where work in connection with the Contract is being carried out or is intended to be carried out.
28. Instructions, Inspections and Audits	28.1 The Contractor shall carry out all instructions of the Project Manager which comply with the applicable laws where the Site is located.
	28.2 The Contractor shall keep, and shall make all reasonable efforts to cause its Subcontractors and sub consultants to keep accurate and systematic accounts and records in respect of the Works in such form and details as will clearly identify relevant time changes and costs.
	28.3 The Contractor shall permit the GoN/DP and/or persons appointed by the GoN/DP to inspect the Site and/or the accounts and records of the Contractor and its sub-contractors relating to the performance of the Contract, and to have such accounts and records audited by auditors appointed by the GoN/DP if required by the GoN/DP. The Contractor's attention is drawn to Sub-Clause 73.2 which provides, inter alia, that acts intended to materially impede the exercise of the GoN's/DP's inspection and audit rights provided for under this Sub-Clause constitute a obstructive practice subject to contract termination.
29. Dispute Settlement	29.1 The Employer and the Contractor shall attempt to settle amicably by direct negotiation any disagreement or dispute arising between them under or in connection with the Contract.
	29.2 Any dispute between the Parties as to matters arising pursuant to this Contract which cannot be settled amicably within thirty (30) days after receipt by one Party of the other Party 's request for such amicable settlement may be referred to Arbitration within 30 days after the expiration of amicable settlement period.
30. Procedures for Disputes	30.1 In case of arbitration, the arbitration shall be conducted in accordance with the arbitration procedures in accordance with law of Nepal at the place within the territory of Nepal **given in the SCC**.
B1. Staff and Labor	
31. Forced Labor	31.1 The Contractor shall not employ forced labor, which consists of any work or service, not voluntarily performed, that is exacted from an individual under threat of force or penalty. This covers any kind of involuntary or compulsory labor, such as indentured

	labor, bonded labor, or similar labor–contracting arrangements.
32. Child Labor	32.1 The Contractor shall not employ children in a manner that is economically exploitative, or is likely to be hazardous, or to interfere with, the child's education, or to be harmful to the child's health or physical, mental, spiritual, moral, or social development. Where national laws have provisions for employment of minors, the Contractor shall follow those laws applicable to the Contractor. Children below the age of 18 years shall not be employed in dangerous work.
33.Non-discrimination and Equal Opportunity	33.1 The Contractor shall not make employment decisions on the basis of personal characteristics unrelated to inherent job requirements. The Contractor shall base the employment relationship on the principle of equal opportunity and fair treatment, and shall not discriminate with respect to aspects of the employment relationship, including recruitment and hiring, compensation (including wages and benefits), working conditions and terms of employment, access to training, promotion, termination of employment or retirement, and discipline. In countries where national law provides for non-discrimination in employment, the Contractor shall comply with national law. When national laws are silent on nondiscrimination in employment, the Contractor shall meet this Sub clause's requirements. Special measures of protection or assistance to remedy past discrimination or selection for a particular job based on the inherent requirements of the job shall not be deemed discrimination.
B. Time Control	
34. Program	34.1 Within the time **stated in the SCC**, after the date of the Letter of Acceptance, the Contractor shall submit to the Project Manager for approval a Program showing the general methods, arrangements, order, and timing for all the activities in the Works. In the case of a lump sum contract, the activities in the Program shall be consistent with those in the Activity Schedule.
	34.2 An update of the Program shall be a program showing the actual progress achieved on each activity and the effect of the progress achieved on the timing of the remaining work, including any changes to the sequence of the activities.
	34.3 The Contractor shall submit to the Project Manager for approval an updated Program at intervals no longer than the period **stated in the SCC**. If the Contractor does not submit an updated Program within this period, the Project Manager may withhold the amount **stated in the SCC** from the next payment certificate and continue to withhold this amount until the next payment after the date on which the overdue Program has been submitted. In the case of a lump sum contract, the Contractor shall Provide an updated Activity Schedule within 15 days of being instructed to by the Project Manager.

	34.4 The Project Manager's approval of the Program shall not alter the Contractor's obligations. The Contractor may revise the Program and submit it to the Project Manager again at any time. A revised Program shall show the effect of Variations and Compensation Events.
35. Extension of the Intended Completion Date	35.1 The Project Manager shall extend the Intended Completion Date if a Compensation Event occurs or a Variation is issued which makes it impossible for Completion to be achieved by the Intended Completion Date without the Contractor taking steps to accelerate the remaining work, which would cause the Contractor to incur additional cost.
	35.2 The Project Manager shall decide whether and by how much to extend the Intended Completion Date within 21 days of the Contractor asking the Project Manager for a decision upon the effect of a Compensation Event or Variation and submitting full supporting information at least 21 days prior to the intended completion date. If the Contractor has failed to give early warning of a delay or has failed to cooperate in dealing with a delay, the delay by this failure shall not be considered in assessing the new Intended Completion Date. Along with full supporting information, the contractor shall also submit a revised work schedule and ensure that the Performance Security, Insurance, and Advance Payment Security (if any) remain valid. The contractor shall submit Performance Security, Advanced Payment Guarantee (if any) and Insurance Policy documents, as required with extended validity, within fifteen (15) days of receiving the Letter of Extension of Intended Completion Date from the Employer.
	35.3 If the contractor fails to submit Performance Security, Advanced Payment Guarantee (if any) and Insurance Policy documents, as required with extended validity within the prescribed time as per GCC 35.2, the Contractor shall pay a fine at the rate of 0.01% of the final contract price (without VAT but including PS) per day for a maximum of fifteen (15) days. The Employer may deduct the fine from payments due to the Contractor.
36. Acceleration	36.1 When the Employer wants the Contractor to finish before the Intended Completion Date, the Project Manager shall obtain priced proposals for achieving the necessary acceleration from the Contractor. If the Employer accepts these proposals, the Intended Completion Date shall be adjusted accordingly and confirmed by both the Employer and the Contractor.
	36.2 If the Contractor's priced proposals for acceleration are accepted by the Employer, they are incorporated in the Contract Price and treated as a Variation.
37. Delays Ordered by the Project Manager	37.1 The Project Manager may instruct the Contractor to delay the start or progress of any activity within the Works.
38. Management Meetings	38.1 Either the Project Manager or the Contractor may require the other to attend a management meeting. The business of a

	management meeting shall be to review the plans for remaining work and to deal with matters raised in accordance with the early warning procedure.
	38.2 The Project Manager shall record the business of management meetings and provide copies of the record to those attending the meeting and to the Employer. The responsibility of the parties for actions to be taken shall be decided by the Project Manager either at the management meeting or after the management meeting and stated in writing to all who attended the meeting.
39. Early Warning	39.1 The Contractor shall warn the Project Manager at the earliest opportunity of specific likely future events or circumstances that may adversely affect the quality of the work, increase the Contract Price, or delay the execution of the Works. The Project Manager may require the Contractor to provide an estimate of the expected effect of the future event or circumstance on the Contract Price and Completion Date. The estimate shall be provided by the Contractor as soon as reasonably possible.
	39.2 The Contractor shall cooperate with the Project Manager in making and considering proposals for how the effect of such an event or circumstance can be avoided or reduced by anyone involved in the work and in carrying out any resulting instruction of the Project Manager.
C. Quality Control	
40.Identifying Defects	40.1 The Project Manager shall check the Contractor's work and notify the Contractor of any Defects that are found. Such checking shall not affect the Contractor's responsibilities. The Project Manager may instruct the Contractor to search for a Defect and to uncover and test any work that the Project Manager considers may have a Defect.
41. Tests	41.1 If the Project Manager instructs the Contractor to carry out a test not specified in the Specification to check whether any work has a Defect and the test shows that it does, the Contractor shall pay for the test and any samples. If there is no Defect, the test shall be a Compensation Event.
42. Correction of Defects	42.1 The Project Manager shall give notice to the Contractor of any Defects before the end of the Defects Liability Period, which begins at_issuance of taking over certificate pursuant to GCC clause 69.2, and is **defined in the SCC**. The Defects Liability Period shall be extended for as long as Defects remain to be corrected.
	42.2 Every time notice of a Defect is given, the Contractor shall correct the notified Defect within the length of time specified by the Project Manager's notice.

43.Uncorrected Defects	43.1 If the Contractor has not corrected a Defect within the time specified in the Project Manager's notice, the Project Manager shall assess the cost of having the Defect corrected, and the Contractor shall pay this amount.
D. Cost Control	
44. Contract Price	44.1 In the case of a Unit Rate contract, the Bill of Quantities shall contain priced items for the Works to be performed by the Contractor. The Bill of Quantities is used to calculate the Contract Price. The Contractor will be paid for the quantity of the work accomplished at the rate in the Bill of Quantities for each item.
	44.2 In the case of a lump sum contract, the Activity Schedule shall contain the priced activities for the Works to be performed by the Contractor. The Activity Schedule is used to monitor and control the performance of activities on which basis the Contractor will be paid. If payment for Materials on Site shall be made separately, the Contractor shall show delivery of Materials to the Site separately on the Activity Schedule.
45. Changes in the Contract Price	45.1 In the case of a Unit Rate contract: (a) If the final quantity of the work done differs from the quantity in the Bill of Quantities for the particular item by more than 25 percent, provided the change exceeds 2 percent of the Initial Contract Price, the Project Manager shall adjust the rate to allow for the change. (b) If requested by the Project Manager, the Contractor shall provide the Project Manager with a detailed cost breakdown of any rate in the Bill of Quantities.
	45.2 In the case of a lump sum contract, the Activity Schedule shall be amended by the Contractor to accommodate changes of Program or method of working made at the Contractor's own discretion. Prices in the Activity Schedule shall not be altered when the Contractor makes such changes to the Activity Schedule.
46. Variations	46.1 All Variations shall be included in updated Programs, and, in the case of a lump sum contract, also in the Activity Schedule, produced by the Contractor.
	46.2 The Contractor shall provide the Project Manager with a quotation for carrying out the Variation when requested to do so by the Project Manager. The Project Manager shall assess the quotation, which shall be given within seven (7) days of the request or within any longer period stated by the Project Manager and before the Variation is ordered.
	46.3 If the Contractor's quotation is unreasonable, the Project Manager may order the Variation and make a change to the Contract Price, which shall be based on the Project Manager's

	own forecast of the effects of the Variation on the Contractor's costs.
	46.4 If the Project Manager decides that the urgency of varying the work would prevent a quotation being given and considered without delaying the work, no quotation shall be given and the Variation shall be treated as a Compensation Event.
	46.5 The Contractor shall not be entitled to additional payment for costs that could have been avoided by giving early warning.
	46.6 In the case of a Unit Rate contract, if the work in the Variation corresponds to an item description in the Bill of Quantities and if, in the opinion of the Project Manager, the quantity of work above the limit stated in **GCC 45.1** or the timing of its execution do not cause the cost per unit of quantity to change, the rate in the Bill of Quantities shall be used to calculate the value of the Variation. If the cost per unit of quantity changes, or if the nature or timing of the work in the Variation does not correspond with items in the Bill of Quantities, the quotation by the Contractor shall be in the form of new rates for the relevant items of work.
47. Cash Flow Forecasts	47.1 When the Program, or, in the case of a lump sum contract, the Activity Schedule, is updated, the Contractor shall provide the Project Manager with an updated cash flow forecast.
48. Payment Certificates	48.1 The Contractor shall submit to the Project Manager monthly statements of the estimated value of the work executed less the cumulative amount certified previously.
	48.2 The Project Manager shall check the Contractor's monthly statement and certify the amount to be paid to the Contractor within 30 days of submission by contractor.
	48.3 The value of work executed shall be determined by the Project Manager.
	48.4 The value of work executed shall comprise: (a) In the case of a Unit Rate contract, the value of the quantities of work in the Bill of Quantities that have been completed; or (b) In the case of a lump sum contract, the value of work executed shall comprise the value of completed activities in the Activity Schedule.
	48.5 The value of work executed shall include the valuation of Variations and Compensation Events.
	48.6 The Project Manager may exclude any item certified in a previous certificate or reduce the proportion of any item previously certified in any certificate in the light of later information.
	49.1 Payments shall be adjusted for deductions for advance payments

49. Payments	and retention. The Employer shall pay the Contractor the amounts certified by the Project Manager within 30 days of the date of each certificate. If the Employer makes a late payment, the Contractor shall be paid interest as **indicated in the SCC** on the late payment in the next payment. Interest shall be calculated from the date by which the payment should have been made up to the date when the late payment is made.
	49.2 If an amount certified is increased in a later certificate or as a result of an award by an Arbitrator, the Contractor shall be paid interest upon the delayed payment as set out in this clause. Interest shall be calculated from the date upon which the increased amount would have been certified in the absence of dispute.
	49.3 Items of the Works for which no rate or price has been entered in BOQ shall not be paid for by the Employer and shall be deemed covered by other rates and prices in the Contract.
50. Compensation Events	50.1 The following shall be Compensation Events: (a) The Employer does not give access to a part of the Site by the Site Possession Date pursuant to GCC 26.1. (b) The Employer modifies the Schedule of Other Contractors in a way that affects the work of the Contractor under the Contract. (c) The Project Manager orders a delay or does not issue Drawings, Specifications, or instructions required for execution of the Works on time. (d) The Project Manager instructs the Contractor to uncover or to carry out additional tests upon work, which is then found to have no Defects. (e) The Project Manager unreasonably does not approve a subcontract to be let. (f) Ground conditions are substantially more adverse than could reasonably have been assumed before issuance of the Letter of Acceptance from the information issued to bidders (including the Site Investigation Reports), from information available publicly and from a visual inspection of the Site. (g) The Project Manager gives an instruction for dealing with an unforeseen condition, caused by the Employer, or additional work required for safety or other reasons. (h) Other contractors, public authorities, utilities, or the Employer does not work within the dates and other constraints stated in the Contract, and they cause delay or extra cost to the Contractor. (i) The advance payment is delayed. (j) The effects on the Contractor of any of the Employer's Risks. (k) The Project Manager unreasonably delays issuing a

	Certificate of Completion.
	50.2 If a Compensation Event would cause additional cost or would prevent the work being completed before the Intended Completion Date, the Contract Price shall be increased and/or the Intended Completion Date shall be extended. The Project Manager shall decide whether and by how much the Contract Price shall be increased and whether and by how much the Intended Completion Date shall be extended.
	50.3 As soon as information demonstrating effect of each Compensation Event upon the Contractor's forecast cost has been provided by the Contractor, it shall be assessed by the Project Manager, and the Contract Price shall be adjusted accordingly. If the Contractor's forecast is deemed unreasonable, the Project Manager shall adjust the Contract Price based on the Project Manager's own forecast. The Project Manager shall assume that the Contractor shall react competently and promptly to the event.
	50.4 The Contractor shall not be entitled to compensation to the extent that the Employer's interests are adversely affected by the Contractor's not having given early warning or not having cooperated with the Project Manager.
51. Tax	51.1 The Project Manager shall adjust the Contract Price if taxes, duties, and other levies are changed between the date 30 days before the submission of bids for the Contract and the date of the last Completion certificate. The adjustment shall be the change in the amount of tax payable by the Contractor, provided such changes are not already reflected in the Contract Price or are a result of GCC 53.
52. Currency	52.1 The currency of Contracts shall be Nepalese Rupees.
53. Price Adjustment	53.1 Prices shall be adjusted for fluctuations in the cost of inputs only if provided for **in the SCC**. If so provided, the amounts certified in each payment certificate, before deducting for Advance Payment, shall be adjusted by applying the respective price adjustment factor to the payment amounts due.
	53.2 Adjustment Formulae[9]: The formulae will be of the following general type: $$pn = A + b\frac{Ln}{Lo} + c\frac{Mn}{Mo} + d\frac{En}{Eo} + etc.$$

[9] For complex Works involving several types of construction work with different inputs, a family of Formulae will be necessary. The various items of Day work may also require different formulae, depending on the nature and source of the inputs

	Where: *pn* is a price adjustment factor to be applied to the amount for the payment of the work carried out in the subject month, determined in accordance with Clause 49; *A* is a constant, specified in the Bidding Forms- Table of Price Adjustment data, representing the nonadjustable portion in contractual payments;[10]b, c, d, etc., coefficients representing the estimated proportion of each cost element (labor, materials, equipment usage, etc.) in the Works or sections thereof, net of Provisional Sums, **as specified in the SCC;** *Ln, Mn, En,* etc., are the current cost indices or reference prices of the cost elements for month "n," determined pursuant to Sub-Clause 53.4, applicable to each cost element; and *Lo, Mo, Eo,* etc., are the base cost indices or reference prices corresponding to the above cost elements at the date specified in Sub-Clause 53.4.
	53.3 Sources of Indices and Weightings: The sources of indices shall be those listed in the Bidding Forms- Table of Price Adjustment data, as approved by the Project Manager and stated in SCC. Indices shall be appropriate for their purpose and shall relate to the Contractor's proposed source of supply of inputs on the basis of which his Contract shall have been computed. As the proposed basis for price adjustment, the Contractor shall have submitted with his bid the tabulation of Weightings and Source of Indices in the Bidding Forms, which shall be subject to approval by the Project Manager.
	53.4 Base, Current and Provisional Indices: The base cost indices or prices shall be those prevailing on the day 30 days prior to the latest date for submission of bids. Current indices or prices shall be those prevailing on the day 30 days prior to the last day of the period to which a particular Interim Payment Certificate is related. If at any time the current indices are not available, provisional indices as determined by the Project Manager will be used, subject to subsequent correction of the amounts paid to the Contractor when the current indices become available.
	53.5 Weightings: The weightings for each of the factors of cost given in the Bidding Forms shall be adjusted if, in the opinion of the Project Manager, they have been rendered unreasonable, unbalanced or inapplicable as a result of varied or additional work already executed or instructed under Clause 46 or for any other reason.
	53.6 Where, price adjustment provision is not applicable pursuant to

[10] Insert a figure for factor A only where there is a part of the Contractors' expenditures which will not be subject to fluctuation in cost or to compensate for the unreliability of some indices. A should normally be 0.15. The sum of A, b, c, d, etc., should be one.

	Sub-clause 53.1 then the Contract is subject to price adjustment only for construction material in accordance with this clause. If the prices of the construction materials stated in the contract is increased or decreased in an unexpected manner in excess of ten (10%) percent in comparison to the base price construction material stated in Section –IV, Bidding Forms-Table of Price Adjustment Data, then the price adjustment for the increase or decrease of price of the construction material beyond 10% shall be made by applying the following formulas: For unexpected increase in price $P = [R_1 - (R_0 \times 1.10)] \times Q$ For unexpected decrease in price P $= [R_1 - (R_0 \times 0.90)] \times Q$ Where: "P" is price adjustment amount "R_1" is the present price of the construction material (Source of indices shall be those listed in the Bidding forms) "R_0" is the base price of the construction material "Q" is quantity of the construction material consumed in construction during the period of price adjustment consideration If the Base price and source is to be proposed by the Bidder as per the provision made in Section –IV, Bidding Forms-Table of Price Adjustment Data then the Base price and source filled by Bidder for the construction material stated in the Bidding Form shall be subject to the approval of the Project manager and shall be as **stated in SCC**.
	53.7 The Price Adjustment amount shall be limited to a maximum of the initial Contract Amount **as specified in the SCC**.
	53.8 The Price Adjustment provision shall not be applicable for delayed period if the contract is not completed in time due to the delay caused by the contractor or the contract is a Lump sum Contract.
54. Retention	54.1 The Employer shall retain from each payment due to theContractor the proportion **stated in the SCC** until Completion of the whole of the Works.
	54.2 Upon the issue of a Defects Liability Certificate by the Project Manager, **in accordance with GCC** 70.1, half the total amount retained shall be repaid to the Contractor and half when the Contractor has submitted the evidence of submission of tax return to the concerned Internal Revenue Office.
	54.3 The Contractor may substitute retention money with an

	unconditional bank guarantee issued from Commercial Bank or Financial Institution eligible to issue Bank Guarantee as per prevailing Law if: (a) at least eighty (80) percent of the whole works have been completed, (b) progress of the works is satisfactory in accordance with the Contract as per approved work schedule, and (c) it can be assured that the works can be completed at the intended completion date. The validity of the bank guarantee under this sub-clause shall be at least 30 days beyond the end of Defect Liability Period.
	54.4 If retention money is substituted by bank guarantee in accordance with clause 54.3, the bank guarantee shall be submitted either using the Retention Money Security Form included in Section X (Contract Forms) or in another Form acceptable to the employer. The validity of the bank guarantee shall be at least one month more than the end of defect liability period.
55. Liquidated Damages	55.1 The Contractor shall pay liquidated damages to the Employer at the rate per day **stated in the SCC** for each day that the Completion Date is later than the Intended Completion Date. The total amount of liquidated damages shall not exceed the amount **defined in the SCC**. The Employer may deduct liquidated damages from payments due to the Contractor. Payment of liquidated damages shall not affect the Contractor's liabilities.
	55.2 If the Intended Completion Date is extended after liquidated damages have been paid, the Project Manager shall correct any overpayment of liquidated damages by the Contractor by adjusting the next payment certificate. The Contractor shall be paid interest on the overpayment, calculated from the date of payment to the date of repayment, at the rates specified in GCC 49.
56. Bonus	56.1 The Contractor shall be paid a Bonus calculated at the rate per calendar day **stated in the SCC** for each day (less any days for which the Contractor is paid for acceleration) that the Completion is earlier than the Intended Completion Date. The Project Manager shall certify that the Works are complete, although they may not be due to be complete.
57. Advance Payment	57.1 Unless otherwise **stated in SCC,** the Employer shall make advance payment to the Contractor of the amounts stated in the SCC in a separate bank account maintained for the contract in two equal installments by the date **stated in the SCC**, against

	provision by the Contractor of an unconditional bank guarantee from Commercial Bank or Financial Institution eligible to issue Bank Guarantee as per prevailing Law in Nepal in a form acceptable to the Employer in amounts equal to the advance payment. The guarantee shall remain effective until the advance payment has been repaid, but the amount of the guarantee shall be progressively reduced by the amounts repaid by the Contractor. Interest shall not be charged on the advance payment. The validity of the bank guarantee under this sub-clause shall be at least 30 days beyond the end of intended completion date. The contractor shall submit the list of activities for which the Advance Payment for mobilization is to be used along with their time schedules.
	57.2 The Contractor is to use the advance payment only to pay for the purpose of construction site preparation, establishment of temporary camp facilities, construction of workers' housing, mobilization of labors, materials or equipment etc. required specifically for execution of the Contract. The Contractor shall demonstrate that advance payment has been used in this way by supplying copies of invoices or other documents to the Project Manager.
	57.3 The advance payment shall be repaid by deducting proportionate amounts, **as stated in SCC**, from payments otherwise due Contractor, following the schedule of completed percentages of the Works on a payment basis. No account shall be taken of the advance payment or its repayment in assessing valuations of work done, Variations, price adjustments, Compensation Events, Bonuses, or Liquidated Damages.
	57.4 If the advance provided under GCC 57.1 is not repaid due to non-performance of the works under the contract, by the Contractor within the time period specified in the Contract, the Employer shall recover the advance by enforcing the bank guarantee as provided under GCC 57.1, and shall also recover interest on the advance amount from the Contractor at a rate **stated in SCC.**
58. Securities	58.1 The Performance Security, including any additional security required as per ITB 35.5, shall be provided to the Employer no later than the date specified in the Letter of Acceptance and shall be issued in an amount **specified in the SCC,** by a Commercial Bank or Financial Institution eligible to issue Bank Guarantee as per prevailing Law in Nepal in accordance with the conditions of Contract using Sample Form for the Performance Security included in Section X (Contract Forms), or another form acceptable to the Employer, and denominated in Nepalese Rupees. The Performance Security shall be valid until a date 30 days beyond the end of the Defect Liability Period. However, any additional performance security required as per

	ITB 35.5 shall be valid until a date 30 days beyond the end of the intended completion date.
	58.2 The performance security issued by any foreign Bank outside Nepal must be counter guaranteed by Commercial Bank or Financial Institution eligible to issue Bank Guarantee as per prevailing Law in Nepal.
59. Dayworks	59.1 If applicable, the Dayworks rates in the Contractor's Bid shall be used for small additional amounts of work only when the Project Manager has given written instructions in advance for additional work to be paid for in that way.
	59.2 All work to be paid for as Dayworks shall be recorded by the Contractor on forms approved by the Project Manager. Each completed form shall be verified and signed by the Project Manager within two days of the work being done.
	59.3 The Contractor shall be paid for Dayworks subject to obtaining signed Dayworks forms.
60. Cost of Repairs	60.1 Loss or damage to the Works or Materials to be incorporated in the Works between the Start Date and the end of the Defects Correction periods shall be remedied by the Contractor at the Contractor's cost if the loss or damage arises from the Contractor's acts or omissions.
F. Force Majeure	
61. Definition of Force Majeure	61.1 In this Clause, "Force Majeure" means an exceptional event or circumstance, (a) which is beyond a Party's control; (b) which such Party could not reasonably have provided against before entering into the Contract; (c) which, having arisen, such Party could not reasonably have avoided or overcome; and (d) which is not substantially attributable to the other Party.
	61.2 Force Majeure may include, but is not limited to, exceptional events or circumstances of the kind listed below, so long as conditions (a) to (d) above are satisfied: (a) war, hostilities (whether war be declared or not), invasion, act of foreign enemies; (b) rebellion, terrorism, sabotage by persons other than the Contractor's Personnel, revolution, insurrection, military or usurped power, or civil war; (c) riot, commotion, disorder, strike or lockout by persons other than the Contractor's Personnel;

	(d) munitions of war, explosive materials, ionizing radiation or contamination by radio-activity, except as may be attributable to the Contractor's use of such munitions, explosives, radiation or radio-activity; and (e) natural catastrophes such as earthquake, hurricane, typhoon or volcanic activity.
62. Notice of Force Majeure	62.1 If a Party is or will be prevented from performing its substantial obligations under the Contract by Force Majeure, then it shall give notice to the other Party of the event or circumstances constituting the Force Majeure and shall specify the obligations, the performance of which is or will be prevented. The notice shall be given within 14 days after the Party became aware, or should have become aware, of the relevant event or circumstance constituting Force Majeure.
	62.2 The Party shall, having given notice, be excused performance of its obligations for so long as such Force Majeure prevents it from performing them.
	62.3 Notwithstanding any other provision of this Clause, Force Majeure shall not apply to obligations of either Party to make payments to the other Party under the Contract.
63. Duty to Minimize Delay	63.1 Each Party shall at all times use all reasonable endeavors to minimize any delay in the performance of the Contract as a result of Force Majeure.
	63.2 A Party shall give notice to the other Party when it ceases to be affected by the Force Majeure.
64. Consequences of Force Majeure	64.1 If the Contractor is prevented from performing its substantial obligations under the Contract by Force Majeure of which notice has been given under GCC 62, and suffers delay and/or incurs Cost by reason of such Force Majeure, the Contractor shall be entitled subject to GCC 30 to (a) an extension of time for any such delay, if completion is or will be delayed, under GCC35; and (b) if the event or circumstance is of the kind described in sub-paragraphs (a) to (d) of GCC 61.2 and, in the case of subparagraphs (b) to (d), occurs in the Country, payment of any such Cost, including the costs of rectifying or replacing the Works and/or Goods damaged or destructed by Force Majeure, to the extent they are not indemnified through the insurance policy referred to in GCC 19.

	64.2 After receiving this notice, the Project Manager shall proceed in accordance with GCC 10 to agree or determine these matters.
65. Force Majeure Affecting Subcontractor	65.1 If any Subcontractor is entitled under any contract or agreement relating to the Works to relief from force majeure on terms additional to or broader than those specified in this Clause, such additional or broader force majeure events or circumstances shall not excuse the Contractor's nonperformance or entitle him to relief under this Clause.
66. Optional Termination, Payment and Release	66.1 If the execution of substantially all the Works in progress is prevented for a continuous period of 90 days by reason of Force Majeure of which notice has been given under GCC 62, or for multiple periods which total more than 150 days due to the same notified Force Majeure, then either Party may give to the other Party a notice of termination of the Contract. In this event, the termination shall take effect 7 days after the notice is given, and the Contractor shall proceed in accordance with GCC 72.5.
	66.2 Upon such termination, the Project Manager shall determine the value of the work done and issue a Payment Certificate, which shall include (a) the amounts payable for any work carried out for which a price is stated in the Contract; (b) the Cost of Plant and Materials ordered for the Works which have been delivered to the Contractor, or of which the Contractor is liable to accept delivery: this Plant and Materials shall become the property of (and be at the risk of) the Employer when paid for by the Employer, and the Contractor shall place the same at the Employer's disposal; (c) other Costs or liabilities which in the circumstances were reasonably and necessarily incurred by the Contractor in the expectation of completing the Works; (d) the Cost of removal of Temporary Works and Contractor's Equipment from the Site and the return of these items to the Contractor's works in his country (or to any other destination at no greater cost); and (e) the Cost of repatriation of the Contractor's staff and labor employed wholly in connection with the Works at the date of termination.
67. Release from Performance	67.1 Notwithstanding any other provision of this Clause, if any event or circumstance outside the control of the Parties (including, but not limited to, Force Majeure) arises, which makes it impossible or unlawful for either or both Parties to fulfill its or their

	contractual obligations or which, under the law governing the Contract, entitles the Parties to be released from further performance of the Contract, then upon notice by either Party to the other Party of such event or circumstance, (a) the Parties shall be discharged from further performance, without prejudice to the rights of either Party in respect of any previous breach of the Contract; and (b) the sum payable by the Employer to the Contractor shall be the same as would have been payable under GCC 66 if the Contract had been terminated under GCC 66.
G. Finishing the Contract	
68. Completion	68.1 The Contractor shall request the Project Manager to issue a certificate of Completion of the Works, and the Project Manager shall do so upon deciding that the work is completed.
	68.2 In addition to the other provisions, before acceptance of the completed works, Employer shall verify and assure that such works are within the set objective, quality and appropriate to operate and use.
69. Taking Over	69.1 In the contractor's Opinion, if the works are complete and ready for taking over, the contractor may apply by notice to the Project Manager for a Taking-Over Certificate. If the Works are divided into Sections, the Contractor may similarly apply for a Taking-Over Certificate for each Section. 69.2 The Project Manager shall, within 30 days after receiving the Contractor's application: (a) issue the Taking-Over Certificate to the Contractor if physical progress of works is at least ninety (90) percent in accordance with the Contract except for any minor outstanding work and defects (as listed in the Taking-Over Certificate) which will not substantially affect the use of the Works or Section for their intended purpose (either until or whilst this work is completed and these defects are remedied); or (b) reject the application, giving reasons and specifying the work required to be done by the Contractor to enable the Taking-Over Certificate to be issued. The Contractor shall then complete this work before issuing a further notice under this Sub-Clause. 69.3 If the Engineer fails either to issue the Taking-Over Certificate or to reject the Contractor's application within the period of 30 days, and if the Works or Section (as the case may be) are substantially completed in accordance with the Contract, the Taking-Over Certificate shall be deemed to have been issued on the last day of that period.
70. Final Account	70.1 The Contractor shall supply the Project Manager with a detailed account of the total amount that the Contractor considers payable under the Contract before the end of the Defects Liability Period. The

	Project Manager shall issue a Defects Liability Certificate and certify any final payment that is due to the Contractor within 60 days of receiving the Contractor's account if it is correct and complete. If it is not, the Project Manager shall issue within 60 days a schedule that states the scope of the corrections or additions that are necessary. If the Final Account is still unsatisfactory after it has been resubmitted, the Project Manager shall decide on the amount payable to the Contractor and issue a payment certificate.
71. Operating and Maintenance Manuals	71.1 If "as built" Drawings and/or operating and maintenance manuals are required, the Contractor shall supply them by the **dates stated in the SCC**.
	71.2 If the Contractor does not supply the Drawings and/or manuals by the dates **stated in the SCC** pursuant to **GCC 71.1,** or they do not receive the Project Manager's approval, the Project Manager shall withhold the amount **stated in the SCC** from payments due to the Contractor.
72. Termination	72.1 The Employer may terminate the Contract at any time if the contractor; a. does not commence the work as per the Contract, b. abandons the work without completing, c. fails to achieve progress as per the Contract.
	72.2 The Employer or the Contractor may terminate the Contract if the other party causes a fundamental breach of the Contract.
	72.3 Fundamental breaches of Contract shall include, but shall not be limited to, the following: a. the Contractor uses the advance payment for matters other than the contractual obligations, b. the Contractor stops work for 30 days when no stoppage of work is shown on the current Program and the stoppage has not been authorized by the Project Manager; c. the Project Manager instructs the Contractor to delay the progress of the Works, and the instruction is not withdrawn within 30 days; d. the Employer or the Contractor is made bankrupt or goes into liquidation other than for a reconstruction or amalgamation. e. a payment certified by the Project Manager is not paid by the Employer to the Contractor within 90 days of the date of the Project Manager's certificate; f. the Project Manager gives Notice that failure to correct a particular Defect is a fundamental breach of Contract and the Contractor fails to correct it within a reasonable period of time determined by the Project Manager; g. the Project Manager gives two consecutive Notices to update the Program and accelerate the works to ensure compliance with GCC Sub clause 22.1 and the Contractor fails to update the Program and demonstrate acceleration of the works

	within a reasonable period of time determined by the Project Manager; h. the Contractor does not maintain a Security, which is required; i. the Contractor has delayed the completion of the Works by the number of days for which the maximum amount of liquidated damages can be paid, **as defined in the SCC**; and j. If the Contractor, in the judgment of the Employer has engaged in corrupt or fraudulent practices in competing for or in executing the Contract, pursuant to GCC 73.1. k. If the Contractor fails to submit Performance Security, Advanced Payment Guarantee (if any) and Insurance Policy documents even after the time period indicated in GCC 35.3.
	72.4 When either party to the Contract gives notice of a breach of Contract to the Project Manager for a cause other than those listed under GCC 72.3 above, the Project Manager shall decide whether the breach is fundamental or not.
	72.5 Notwithstanding the above, the Employer may terminate the Contract for convenience.
	72.6 If the Contract is terminated, the Contractor shall stop work immediately, make the Site safe and secure, and leave the Site as soon as reasonably possible.
73. Fraud and Corruption	73.1 If the Employer determines that the Contractor has engaged in corrupt, fraudulent, collusive, coercive or obstructive practices, in competing for or in executing the Contract, then the Employer may, after giving 15 days' notice to the Contractor, terminate the Contractor's employment under the Contract and expel him from the Site.
	73.2 Should any employee of the Contractor be determined to have engaged in corrupt, fraudulent, collusive, coercive, or obstructive practice during the execution of the Works, then that employee shall be removed in accordance with GCC Clause 15. For the purposes of this GCC 73; (i) "corrupt practice" is the offering, giving, receiving or soliciting, directly or indirectly, of anything of value to influence improperly the actions of another party. (ii) "fraudulent practice"[5] is any act or omission, including a misrepresentation, that knowingly or recklessly misleads, or attempts to mislead, a party to obtain a financial or other benefit or to avoid an obligation; (iii) "collusive practice"[6] is an arrangement between two or more parties designed to achieve an improper purpose, including to influence improperly the actions of another party; (iv) "coercive practice"[7] is impairing or harming, or threatening to impair or harm, directly or indirectly, any party or the property of the party to influence improperly the actions of a

	party; (v) "obstructive practice" is (aa) deliberately destroying, falsifying, altering or concealing of evidence material to the investigation or making false statements to investigators in order to materially impede a investigation into allegations of a corrupt, fraudulent, coercive or collusive practice; and/or threatening, harassing or intimidating any party to prevent it from disclosing its knowledge of matters relevant to the investigation or from pursuing the investigation; or (bb) acts intended to materially impede the exercise of the GON's/DP's inspection and audit rights provided for under GCC28.3.
	73.3 The contractor shall be prosecuted for offenses under prevailing criminal laws, if the contractor: (i) Misuses the Advance Payment or payments received from the Employer; (ii) Receives payment by submitting false information or documents; (iii) Abandons the works before completion; (iv) Commits a serious violation of the contract; or (v) Causes loss or damage to the Employer.
74. Black Listing	74.1 Without prejudice to any other rights of the Employer under this Contract, GoN, Public Procurement Monitoring Office (PPMO), on the recommendation of procuring entity, may blacklist a Bidder or contractor for its conduct for a period of one (1) to three (3) years on the following grounds and seriousness of the act committed by the bidder or contractor: (a) if it is established that the Contractor has committed substantial defect in implementation of the contract or has not substantially fulfilled its obligations under the contract or the completed work is not of the specified quality as per the contract. (b) If convicted from a court of law in a criminal offense liable to be disqualified for taking part in procurement contract, (c) If it is established that the Contractor has engaged in corrupt or fraudulent practices in competing for or in executing the Contract.
75. Payment upon Termination	75.1 If the Contract is terminated because of a fundamental breach of Contract by the Contractor, the Project Manager shall issue a certificate for the value of the work done and Materials ordered less advance payments received up to the date of the issue of the certificate. Additional Liquidated Damages shall not apply. If the total amount due to the Employer exceeds any payment due to the Contractor, the difference shall be a debt payable to the Employer.
	75.2 If the Contract is terminated for the Employer's convenience or because of a fundamental breach of Contract by the Employer, the Project Manager shall issue a certificate for the value of the work

	done, Materials ordered, the reasonable cost of removal of Equipment, repatriation of the Contractor's personnel employed solely on the Works, and the Contractor's costs of protecting and securing the Works, and less advance payments received up to the date of the certificate.
	75.3 If the Contract is terminated because of fundamental breach of Contract or for any other fault by the Contractor, the Employer may: (a) withhold further payments to the Contractor until the costs of design, execution, completion and remedying of any defects, liquidated damages (if any), and all other costs incurred by the Employer, have been established, and/or (b) recover from the Contractor any losses and damages incurred by the Employer and any additional costs of completing the Works, after allowing for any sum due to the Contractor, as Government dues. After recovering any such losses, damages and extra costs, the Employer shall pay any balance to the Contractor. (c) forfeit the Performance Security. If the total amount due to the Employer exceeds any payment due to the Contractor, the difference shall be a debt payable to the Employer.
76. Property	76.1 All Materials on the Site, Plant, Equipment, Temporary Works, and Works shall be deemed to be the property of the Employer if the Contract is terminated because of the Contractor's default.
77. Release from Performance	77.1 If the Contract is frustrated by the outbreak of war or by any other event entirely outside the control of either the Employer or the Contractor, the Project Manager shall certify that the Contract has been frustrated. The Contractor shall make the Site safe and stop work as quickly as possible after receiving this certificate and shall be paid for all work carried out before receiving it and for any work carried out afterwards to which a commitment was made.
78.Suspension of DP Loan/Credit/ Grant	78.1 In the event that the DP suspends the loan/ credit/grant to the Employer from which part of the payments to the Contractor are being made: a. the Employer is obligated to notify the Contractor of such suspension within 7 days of having received the DP's suspension notice; and b. if the Contractor has not received sums due him within the 30 days for payment provided for in GCC 49.1, the Contractor may immediately issue a 15-day termination notice.
79. Eligibility	79.1 The Contractor shall have the nationality of an eligible country as specified in Section V of the bidding document. The Contractor shall be deemed to have the nationality of a country if the Contractor is a citizen or is constituted, or incorporated, and operates in conformity with the provisions of the laws of that country. This criterion shall also apply to the determination of the nationality of proposed subcontractors or suppliers for any

	part of the Contract including related services.
	79.2 The materials, equipment, and services to be supplied under the Contract shall have their origin in eligible source countries as specified in Section V of the bidding document and all expenditures under the Contract will be limited to such materials, equipment, and services. At the Employer's request, the Contractor may be required to provide evidence of the origin of materials, equipment, and services.
	79.3 For purposes of GCC 79.2, "origin" means the place where the materials and equipment are mined, grown, produced, or manufactured, and from which the services are provided. Materials and equipment are produced when, through manufacturing, processing, or substantial or major assembling of components, a commercially recognized product results that differs substantially in its basic characteristics or in purpose or utility from its components.
80. Project Manager's Duties and Authorities	80.1 The Project Manager's duties and authorities are restricted to the extent as **stated in the SCC**.
81. Quarries and Spoil Dumps	81.1 Any quarry operated as part of this Contract shall be maintained and left in a stable condition without steep slopes and be either refilled or drained and be landscaped by appropriate planting. Rock or gravel taken from a river shall be removed over some distance so as to limit the depth of material removed at any one location, not disrupt the river flow or damage or undermine the river banks. The Contractor shall not deposit excavated material on land in Government or private ownership except as directed by the Project Manager in writing or by permission in writing of the authority responsible for such land in Government ownership, or of the owner or responsible representative of the owner of such land in private ownership, and only then in those places and under such conditions as the authority, owner or responsible representative may prescribe.
82. Local Taxation	82.1 The prices bid by the Contractor shall include all taxes that may be levied in accordance to the laws and regulations in being in Nepal on the date 30 days prior to the closing date for submissions of Bids on the Contractor's equipment, plant and materials acquired for the purpose of the Contract and on the services performed under the Contract. Nothing in the Contract shall relieve the Contractor from his responsibility to pay any tax that may be levied in Nepal on profits made by him in respect of the Contract.
83. Value Added Tax	83.1 The Contract is not exempted from value added tax. An amount specified in the schedule of taxes shall be paid by the Contractor in the concerned VAT office within time frame specified in VAT regulation.

84. Income Taxes on Staff	84.1 The Contractor's staff, personnel and labor will be liable to pay personal income taxes in Nepal in respect of their salaries and wages, as are chargeable under the laws and regulations for the time being in force, and the Contractor shall perform such duties in regard to such deductions as may be imposed on him by such laws and regulations.
	84.2 The issue of the Final Account Certificate pursuant to clause GCC 70 shall be made only upon submittal by the Contractor of a certificate of income tax clearance from the Government of Nepal.
85. Duties, Taxes and Royalties	85.1 Any element of royalty, duty or tax in the price of any goods including fuel oil, and lubricating oil, cement, timber, iron and iron goods locally procured by the Contractor for the works shall be included in the Contract rates and prices and no reimbursement or payment in that respect shall be made to the Contractor.
	85.2 The Contractor shall familiarize himself with GON the rules and regulations with regard to customs, duties, taxes, clearing of goods and equipment, immigration and the like, and it will be necessary for him to follow the required procedures regardless of the assistance as may be provided by the Employer wherever possible.
	85.3 The Contractor shall pay and shall not be entitled to the reimbursement of cost of extracting construction materials such as sand, stone/boulder, gravel, etc. from the river beds or quarries. Such prices will be levied by concerned Local Government as may be in force at the time. The Contractor, sub-contractor(s) employed directly by him and for whom he is responsible, will not be exempted from payment of royalties, taxes or other kinds of surcharges on these construction materials so extracted and paid for to the concerned Local Government.
86. Member of Government, etc, not Personally Liable	86.1 No member or officer of GoN or the Employer or the Project Manager or any of their respective employees shall be in any way personally bound or liable for the act or obligations of the Employer under the Contract or answerable for any default or omission in the observance or performance of any of act, matter or thing which are herein contained.
87. Approval of Use of Explosives	87.1 No explosives of any kind shall be used by the Contractor without the prior consent of the Employer in writing and the Contractor shall provide, store and handle these and all other items of every kind whatsoever required for blasting operations, all at his own expense in a manner approved in writing by the Employer.
88 Compliance with Regulations for Explosives	88.1 The Contractor shall comply with all relevant ordinances, instructions and regulations which the Government, or other person or persons having due authority, may issue from time to time regarding the handling, transportation, storage and use of explosives.
89. Permission for Blasting	89.1 The Contractor shall at all times maintain full liaison with and inform well in advance, and obtain such permission as is required

	from all Government authorities, public bodies and private parties whatsoever concerned or affected, or likely to be concerned or affected by blasting operation.
90. Records of Explosives	90.1 Before the beginning of the Defects Liability Period, the Contractor shall account to the satisfaction of the Project Manager for all explosives brought on to the Site during the execution of the Contract and the Contractor shall remove all unused explosives from the Site on completion of works when ordered by the Project Manager.
91.Traffic Diversion	91.1 The Contractor shall include the necessary safety procedures regarding and pedestrian traffic diversion that is needed in execution of the works. The Contractor shall include in his costing of works, any temporary works or diversion that are needed during the construction period. All traffic diversion should be designed for the safety of both the motoring public and the men at work. It shall ensure the uninterrupted flow of traffic and minimum inconvenience to the public during the period concerned. As such, adequate warning signs, flagmen and other relevant safety precautionary measures shall be provided to warn motorists and pedestrians well ahead of the intended diversion as directed by the Project Manager. All traffic devices used shall be designed in accordance with the instruction of Project Manager.
92 Social Security Fund	92.1 The contractor shall enroll the laborers, employees, or other workforce engaged in such work in the Social Security Fund in accordance with prevailing laws.
	92.2 The contractor shall be responsible to disburse the remuneration, benefits, and other payments of the laborers, employees, or workforce into the bank account of the concerned individual.
	92.3 The contractor shall be responsible for ensuring that the required work permit has been obtained in accordance with prevailing laws in respect of foreign personnel.,

Section IX: Special Conditions of Contract

The following Special Conditions of Contract shall supplement the GCC. Whenever there is a conflict, the provisions herein shall prevail over those in the GCC.

Road Division Hetauda

Upgrading of Tribhuvan Rajpath from Ghantaghar to Gandak Chowk Road, Parsa (Chainage Km 04+000 to Km 08+054) Contract No.: TRP/RDHTD/33701130/083/84-27

Special Conditions of Contract

A. General	
GCC 1.1 (p)	The Employer is ***Road Division Hetauda.***
GCC 1.1 (u)	The Intended Completion Date for the whole of the Works shall be: 30 Months from date of Agreement
GCC 1.1(bb) & GCC10.1	The Project Manager is Division Chief/Project Chief . The Project Manager and Engineer are synonyms.
GCC 1.1 (ee)	The Site is located at Upgrading of Tribhuvan Rajpath from Ghantaghar to Gandak Chowk Road, Parsa (Chainage 04+000 to 08+054)
GCC 1.1 (hh)	The Start Date shall be **Within 7 days of agreement**
GCC 1.1 (ll)	The Works consist of Upgrading of Tribhuvan Rajpath from Ghantaghar to Gandak Chowk Road, Parsa
GCC 2.2	Sectional Completions are: ***Not Applicable***
GCC 2.3(i)	The following documents also form part of the Contract: Minutes of Amicable Settlement between the parties.
GCC 3.1	The language of the contract is **ENGLISH/NEPALI** The law that applies to the Contract is the law of NEPAL
GCC 11.1	The Project Manager ***may*** delegate any of his duties and responsibilities.
GCC 12.1 (a)	The agreed electronic transmission shall be roaddivisionhetauda@gmail.com.
GCC 13.1	**Not Applicable**
GCC 14.1	**Not Applicable**
GCC 19.1	The minimum insurance amounts and deductibles shall be: 1. The minimum cover for loss of or damage to the Works, Plant and Materials is: **115%** of the Contract Amount. 2. The maximum deductible for insurance of the Works and of Plant and Materials is: ***as per the provision of Nepal Insurance Authority.*** 3. The minimum cover for loss or damage to **immovable** Equipment/**plants** is: ***100 % (i.e Replacement Cost).*** 4. The maximum deductible for insurance of immovable Equipment/**plant** is: ***as per the provision of Nepal Insurance Authority.*** 5. The minimum **cover for loss of or damage to** other property is: ***1 million***

	with unlimited number of occurrences. 6. The maximum deductible for insurance of other property is: ***as per the provision of Nepal Insurance Authority.*** 7. The minimum cover for personal injury or death insurance i. for the Contractor's employees is that specified in the Labor act of Nepal and ii. for other people is***: 1 million*** with an unlimited number of occurrences.
GCC 20.1	Site Investigation Reports are: The Contractor shall make their own investigation and judgment with regards to the construction site and quantity of suitable construction materials. The employer shall have no liability for any conclusion inferred by the bidder. No additional payment shall be made for the transportation due to the non-availability of local construction materials.
GCC 23.1	The following shall be designed by the Contractor : N/A
GCC 24.2	Occupational Health and Safety OHS Policy for Road Infrastructure Development and Management 2080, Guidelines 2080, and Operating Manual 2080 of DOR.
GCC 26.1	The Site Possession Date(s) shall be: **From 7 days after contract agreement.**
GCC 30.1	The Arbitration shall be conducted in accordance with the Law of Nepal. The place of arbitration shall be: **Kathmandu, Nepal**
C. Time Control	
GCC 34.1	The Contractor shall submit for approval a Program for the Works within ***30*** days from the date of the Letter of Acceptance.
GCC 34.3	The period between Program updates is **90 (Ninety)** days. The amount to be withheld for late submission of an updated Program is **NRs. 500,000.00**
D. Quality Control	
GCC 42.1	The Defects Liability Period is: ***365*** days.
E. Cost Control	
GCC 49.1	**5 Percent.**
GCC 53.1	The Contract ***is*** subject to price adjustment, and the following information regarding coefficients ***does*** apply. The coefficients and indices for adjustment of prices in Nepalese Rupees shall be as specified in the Table of Adjustment Data submitted by bidder together with the Letter of Price Bid which is approved by the Project manager and attached as Annex-1.
GCC 53.6	Base Price of Construction Materials applicable for price adjustment shall be as per the Table of Adjustment Data submitted by Bidder together with the Letter of

	Price Bid which is approved by the Project manager and attached as Annex-1.
GCC 53.7	The Price Adjustment amount shall be limited to a maximum of: For GoN Funded: ***25%*** percentage of the initial Contract Amount (without VAT but including PS) For DP Funded: **Not Applicable**
GCC 54.1	The proportion of payments retained is: 5 (five) percent.
GCC 55.1	The liquidated damages for the whole of the Works are 0.05 Percent of the final Contract Price (without VAT but including PS) per day. The maximum amount of liquidated damages for the whole of the Works is 10 Percent of the final Contract Price (without VAT but including PS).
GCC 56.1	The provision of bonus: ***Not Applicable***
GCC 57.1	The provision of Advance Payments is "Applicable" in the contract. The Advance Payments shall be: 20 percent of initial contract amount (without VAT but including PS) and shall be paid in two equal installments to the Contractor. First installment of 10 (Ten) % shall be made to the contractor upon submission of equivalent acceptable bank guarantee for advance payment, Insurance document, Work Schedule and Quality Assurance Plan as per condition of contract. Second installment of 10(Ten) % shall be made after the contractor completes the physical progress which is not less than 10 (Ten) % of the contract price upon submission of equivalent acceptable Bank Guarantee for advance payment. The advanced payment guarantee shall be valid until 30 days beyond the intended completion date for whole of the work.
GCC 57.3	Deductions from Payment Certificates will commence in the first certificate in which the value of works executed exceeds 30% of the Contract Price. Deduction will be at the rate of ***40%*** of the respective Monthly Interim Payment Certificate until such time as the advance payment has been repaid; provided that the advance payment shall be completely repaid prior to the end of 80 % of the approved contract price.
GCC 57.4	Recover interest on the advance amount from the Contractor should be at a rate of **10 %**.
GCC 58.1	The Performance Security amount is: based on ITB 40.1 and/or ITB 35.5 if the Employer has increased the Performance Security amount.
G. Finishing the Contract	
GCC 71.1	The date by which operating and maintenance manuals are required is within 60 days from the date of completion

GCC 71.2	The date by which "as built" drawings and GIS Database are required is: ***30 days after work acceptance date.*** The amount to be withheld for failing to produce "as built" drawings and/or Operating and maintenance manuals is: NRs 500,000.
GCC 72.3 (i)	The maximum number of days is: **200**
GCC 80	The Project Manager has to obtain the specific approval of the Employer for taking any of the following actions : a. Approving subcontracting of any part of the works under General Conditions of Contract Clause 13; b. Certifying additional costs determined under General Conditions of Contract Clause 50; c. Determining start date under General Conditions of Contract Clause 1; d. Determining the extension of the intended Completion Date under General Conditions of Contract Clause 35; e. Issuing a Variation under General Conditions of Contract Clause 1 and 46, except in an emergency situation, as reasonably determined by the Project Manager; emergency situation may be defined as the situation when protective measures must be taken for the safety of life or of the works or of adjoining property. f. Adjustment of rates under General Conditions of Contract Clause 45;

Section X: Contract Forms

This Section contains forms which, once completed, will form part of the Contract. The forms for Performance Security and when required Advance Payment Security and Retention Money Security shall only be completed by the successful Bidder after contract award.

Letter of Intent

[on letterhead paper of the Employer]

Date: ... ……

To: .....***Name and address of the Contractor***.....

Subject: …… Issuance of letter of intent to award the contract.....

This is to notify you that, it is our intention to award the contract ..... ***[insert date]*** .....for execution of the ... . ***[insert name of the contract and identification number, as given in the Contract Data/SCC]*** to you as your bid price Nepalese Rupees ..... ***[insert amount of contract price in figures and words including taxes]*** as corrected and modified in accordance with the Instructions to Bidders is hereby selected as substantially responsive evaluated bid closest to the Average Bid Price.

Authorized Signature: ……

Name: ... ……..

Title: ……..

CC:
[Insert name and address of all other Bidders, who submitted the bid]

[Notes on Letter of Intent
The issuance of Letter of Intent is the information of the selection of the bid of the successful bidder by the Employer and for providing information to other unsuccessful bidders who participated in the bid as regards to the outcome of the procurement process. This standard form of Letter of Intent to Award should be filled in and sent to the successful Bidder only after evaluation and selection of substantially responsible evaluated bid closest to the Average Bid Price.]

Letter of Acceptance

[on letterhead paper of the Employer]

Date: ……..

To: ……*Name and address of the Contractor*……...

Subject: …….*Notification of Award*

This is to notify that your Bid for the Invitation of Bids dated .....[***Insert date of bid invitation]*** ……..for execution of the……..[***Insert name of the contract and identification number, as given in the Contract BDS/SCC]*** ……... for the Contract price of Nepalese Rupees ***[insert amount of contract price in figures and words including taxes],*** as corrected in accordance with the Instructions to Bidders is hereby accepted in accordance with the Instruction to Bidders.

You are hereby instructed to contact this office to sign the formal contract agreement within 15 days with Performance Security of **NRs**. ……. in accordance with the Conditions of Contract, using for that purpose the Performance security Form included in Section X (Contract Forms) of this Bidding Document.

Authorized Signature: ……...

Name and Title of Signatory: ……

Contract Agreement

THIS AGREEMENT made the .....day of…..between……. name of the Employer ***……(hereinafter "the Employer"),*** of the one part, and ……name of the Contractor ……(hereinafter "the Contractor"), of the other part:

WHEREAS the Employer desires that the Works known as ……..... name of the Contract .....should be executed by the Contractor, and has accepted a Bid by the Contractor for the execution and completion of these Works and the remedying of any defects in the sum of NRs ***….....…...[insert amount of contract price in words and figures including taxes]***(hereinafter "the Contract Price").

The Employer and the Contractor agree as follows:

1. In this Agreement words and expressions shall have the same meanings as are respectively assigned to them in the Contract documents referred to.

2. The following documents shall be deemed to form and be read and construed as part of this Agreement. This Agreement shall prevail over all other Contract documents.
   (a) the Letter of Acceptance;
   (b) the Letters of Technical and Price Bid;
   (c) the Addenda Nos ..... ***Insert addenda numbers if any*** ……
   (d) the Special Conditions of Contract;
   (e) the List of Eligible Countries that was specified in Section V of the bidding document,
   (f) the General Conditions of Contract;
   (g) the Specification;
   (h) the Drawings;
   (i) Bill of Quantities (or Schedules of Prices for lump sum contracts), and
   (j) Table of Price Adjustment Data
   (k) List of Approved Subcontractors *[For GoN funded project]*
   (l) .....***[Specify if there are any other document]***

3. In consideration of the payments to be made by the Employer to the Contractor as indicated in this Agreement, the Contractor hereby covenants with the Employer to execute the Works and to remedy defects therein in conformity in all respects with the provisions of the Contract.

4. The Employer hereby covenants to pay the Contractor in consideration of the execution and completion of the Works and the remedying of defects therein, the Contract Price or such other sum as may become payable under the provisions of the Contract at the times and in the manner prescribed by the Contract.

IN WITNESS whereof the parties hereto have caused this Agreement to be executed in accordance with the laws of Nepal on the day, month and year indicated above.

Signed by …….
for and on behalf the Contractor in the presence of

Witness, Name Signature, Address, Date

Signed by……..
for and on behalf of the Employer in the presence of

Witness, Name, Signature, Address, Date

List of Approved Subcontractors

In accordance with GCC Sub-Clause 13.1, The following Subcontractors are approved for carrying out the work as specified below.

Name of Subcontractors	Description of Works	Value/Percentage of subcontract

Performance Security

(On letterhead paper of the Bank)

..... ***Bank's Name, and Address of Issuing Branch or Office*** .....

Beneficiary: ***..... [insert Name and Address of Employer***]…….....

Date: .....

Performance Guarantee No.:…….

We have been informed that ... ... ***[insert name of the Contractor, which in the case of a joint venture shall be the name of the joint venture]*** (hereinafter called "the Contractor") has been notified by you to sign the Contract No. …….. ***[insert reference number of the Contract]***, for the execution of …….. ***[insert name of contract and brief description of Works]*** (hereinafter called "the Contract").

Furthermore, we understand that, according to the conditions of the Contract, a performance guarantee is required.

At the request of the Contractor, we... ..... ***[insert name of the Bank]*** ……., hereby irrevocably undertake to pay you any sum or sums not exceeding in total an amount of Nepalese Rupees.....***[insert amount in figures*and amount in words]…..*** such sum being payable in Nepalese Rupees, upon receipt by us of your first demand in writing accompanied by a written statement stating that the Contractor is in breach of its obligation(s) under the Contract, without your needing to prove or to show grounds for your demand or the sum specified therein.

This guarantee shall expire, no later than the……***[[insert day].***Day of ***……[[insert month, year]****, ***, and any demand for payment under it must be received by us at this office on or before that date.

This guarantee is subject to the Uniform Rules for Demand Guarantees (URDG), 2010 Revisions, ICC Publication No. 758, except that the supporting statement under Article 15(a) is hereby excluded.

……

Seal of Bank and Signature(s)

Note:

All italicized text is for guidance on how to prepare this demand guarantee and shall be deleted from the final document.

* *The Guarantor shall insert an amount representing the percentage of the Contract Price specified in the Contract in Nepalese Rupees.*

*** Insert the date thirty days after the date specified for the Defect Liability Period. The Employer should note that in the event of an extension of the time for completion of the Contract, the Employer would need to request an extension of this guarantee from the Guarantor. Such request must be in writing and must be made prior to the expiration date established in the guarantee.*

Advance Payment Security

(On letterhead paper of the Bank)

…….. Bank's Name, and Address of Issuing Branch or Office.....

Beneficiary: ……***[insert Name and address of employer]***

Date : ……

Advance Payment Guarantee No……..

We have been informed that …… ***[insert name of the Contractor, which in the case of a joint venture shall be the name of the joint venture]*** …… (hereinafter called "the Contractor") has entered into Contract No. .....***[insert refrence number of the contract]*** dated ……***[date]***…… with you, for the execution of …….*[* ***insert*** *name of contract and brief description of Works]* ……. (hereinafter called "the Contract").

Furthermore, we understand that, according to the Conditions of the Contract, an advance payment in the sum Nepalese Rupees ***……. [Insert amount in figures*and in words]*** is to be made against an advance payment guarantee.

At the request of the Contractor, we... ..... . ***[insert name of the Bank]*** ……..,, hereby irrevocably undertake to pay you any sum or sums not exceeding in total an amount of Nepalese Rupees ***…….[insert amount in figures* and amount in words]*** upon receipt by us of your first demand in writing accompanied by a written statement stating that the Contractor is in breach of its obligation under the Contract because the Contractor:

(a) Used the advance payment for purposes other than the costs of mobilization in respect of the Works; or

(b) Has failed to repay the advance payment when it has become due and payable in accordance with the conditions of the contract, specifying the amount payable by the contractor.

The maximum amount of this guarantee shall be progressively reduced by the amount of the advance payment repaid by the Contractor as indicated in copies of interim statements or payment certificates which shall be presented to us. This guarantee shall expire, at the latest, upon our receipt of a copy of the interim payment certificate indicating that eighty (80) percent of the Contract Price has been certified for payment, or on the ***…..[date].....*** day of ***...[month],[year]...**,*** whichever is earlier. Consequently, any demand for payment under this guarantee must be received by us at this office on or before that date.

This guarantee is subject to the Uniform Rules for Demand Guarantees (URDG), 2010 Revisions, ICC Publication No. 758, except that the supporting statement under Article 15(a) is hereby excluded.

……

Seal of Bank and Signature(s)

Note:

All italicized text is for guidance on how to prepare this demand guarantee and shall be deleted from the final document.

**The Guarantor shall insert an amount representing the amount of the advance payment in Nepalese Rupees of the advance payment as specified in the Contract.*

*** Insert the date Thirty days after the intended completion date. The Employer should note that in the event of an extension of the time for completion of the Contract, the Employer would need to request an extension of this guarantee from the Guarantor. Such request must be in writing and must be made prior to the expiration date established in the guarantee.*

Retention Money Security

(On letterhead paper of the Bank)

..... ***Bank's Name, and Address of Issuing Branch or Office***.....

Beneficiary: _____ ***[Insert name and Address of Employer]***

Date: _____***[Insert date of issue]***

RETENTION MONEY GUARANTEE No.: ***[Insert guarantee reference number]***

We have been informed that _____ ***[insert name of Contractor, which in the case of a joint venture shall be the name of the joint venture]*** (hereinafter called "the Contractor") has entered into Contract No. _____ ***[insert reference number of the contract]*** dated _____ with the Beneficiary, for the execution of _____ ***[insert name of contract and brief description of* Works*]*** (hereinafter called "the Contract").

Furthermore, we understand that, according to the conditions of the Contract, the Beneficiary retains moneys up to the limit set forth in the Contract ("the Retention Money"), and that when at least eighty (80) percent of the whole works have been completed, progress of the works is satisfactory in accordance with the Contract as per approved work schedule and it can be assured that the works can be completed at the intended completion date, payment of ***[insert the amount of the Retention Money]*** is to be made against a Retention Money guarantee.

At the request of the Contractor, we, .. . ***[insert name of the Bank]*** ……..,as Guarantor, hereby irrevocably undertake to pay the Beneficiary any sum or sums not exceeding in total an amount of Nepalese Rupees _____ ***[insert amount in figures and amount in words][111]]***upon receipt by us of the Beneficiary's complying demand supported by the Beneficiary's statement, whether in the demand itself or in a separate signed document accompanying or identifying the demand, stating that the Contractor is in breach of its obligation(s) under the Contract, without your needing to prove or show grounds for your demand or the sum specified therein.

This guarantee shall expire no later than the …. day of ……, … [122], and any demand for payment under it must be received by us at the office indicated above on or before that date.

This guarantee is subject to the Uniform Rules for Demand Guarantees (URDG), 2010 Revisions, ICC Publication No. 758, except that the supporting statement under Article 15(a) is hereby excluded.

_____

[Seal of Bank and signature(s)]

[1]11 *The Guarantor shall insert the amount of the Retention Money.*

[122] *Insert the same expiry date which is 30 days more than the end of Defect Liability Period. The Employer should note that in the event of an extension of this date for completion of the Contract, the Employer would need to request an extension of this guarantee from the Guarantor. Such request must be in writing and must be made prior to the expiration date established in the guarantee.*



Note: All italicized text (including footnotes) is for use in preparing this form and shall be deleted from the final product.

Annex-1

Table of Price Adjustment Data
[SCC 53.1]

Code	Index Description	Source of Index*	Base Value and Date	Employer's Proposed Weighting Range (coefficient)	Bidder's Proposed Weighting (coefficient)**
1	2	3	4	5	6
	Non - adjustable (A)			0.15	0.15
	Labor (b)				
	Materials (c)				
	Equipment usage (d)				
	…				
		Total			**1.00**

Note: Base value and Bidder's proposed weighting coefficient to be filled as per "Bid Form of Table of Price Adjustment Data" in Bidding Forms (Section-IV) after verification by the Employer in case of the alternative provision of Bidder proposed value and weighting coefficient.

Table of Price Adjustment Data
[SCC 53.6]

Code	Construction Material*	Unit	Base Price (NRs/Unit) ** (Ex-factory)	Source (Factory)**
1	2	3	4	5

** For the purpose of calculation of price adjustment, the Ex-factory price of the same source mentioned in the table shall be taken into consideration.

Note: Base Price and source to be filled as per “Bid Form of Table of Price Adjustment Data” in Bidding Forms (Section-IV) after verification by the Employer in case of the alternative provision of Bidder proposed source and base price.

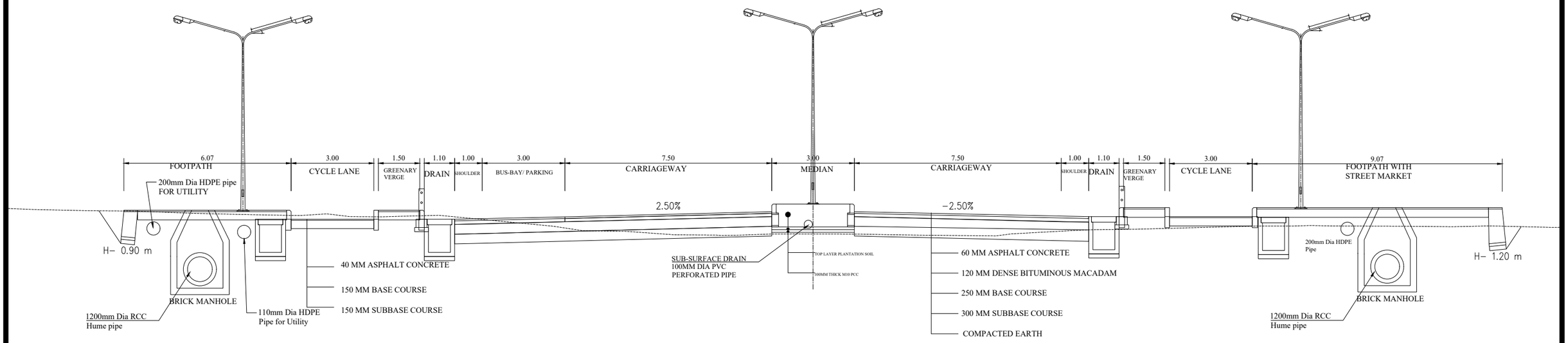

CH: 4+000 to 5+600
where there is Busbay/Parking

Government of Nepal
Ministry Of Infrastructure Development
Department Of Roads
North South Trade Route Improvement Project Directorate
Minbhawan, Kathmandu

PROJECT TITLE- Detail Engineering Survey, Design and Report Preparation
Tribhuwan Rajpath.

TYPICAL CROSS SECTION
(MARKET AREA WITHOUT BUS BAY/ PARKING)

CONSULTANT

GALAXY ENGINEERING TRADE LINK PVT. LTD.
KATHMANDU, NEPAL

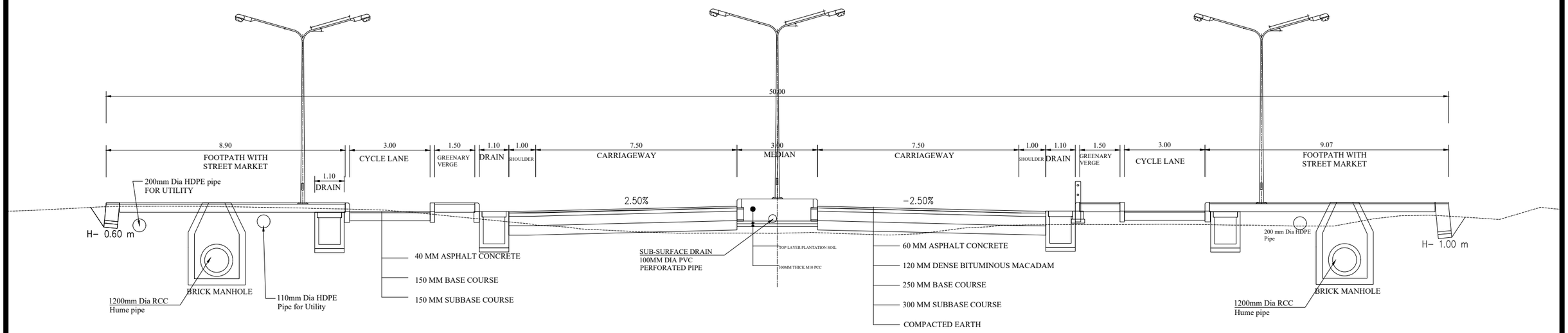

PAVEMENT LAYER CONFIGURATION FOR MAIN LANE.

CH: 4+000 to 5+600
where there is no Busbay/Parking

Government of Nepal
Ministry Of Infrastructure Development
Department Of Roads
North South Trade Route Improvement Project Directorate
Minbhawan, Kathmandu

PROJECT TITLE- Detail Engineering Survey, Design and Report Preparation
Tribhuwan Rajpath.

TYPICAL CROSS SECTION
(MARKET AREA WITH BUS BAY/ PARKING)

CONSULTANT

GALAXY ENGINEERING TRADE LINK PVT. LTD.
KATHMANDU, NEPAL

CH: 5+600 to 7+000

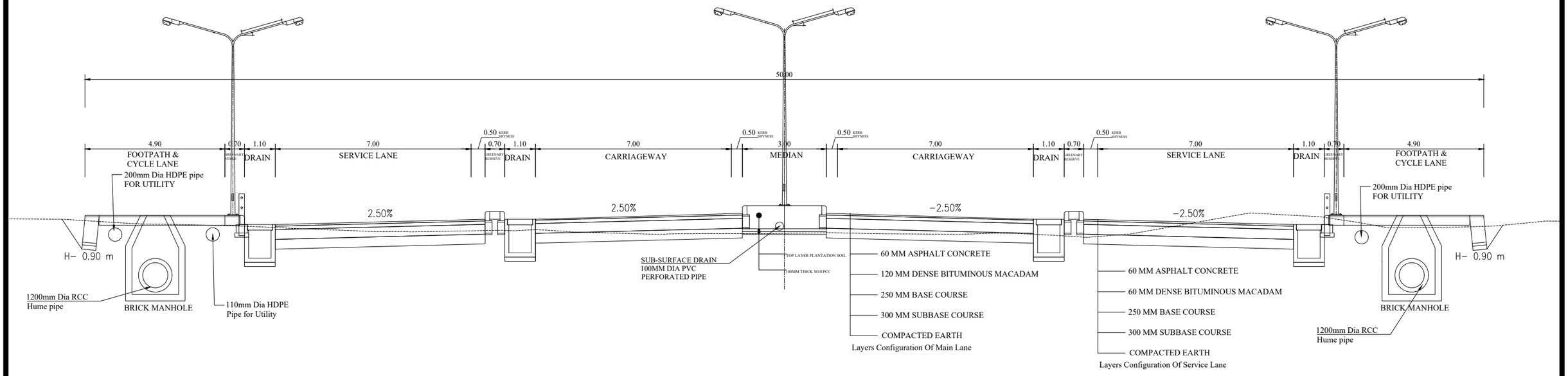

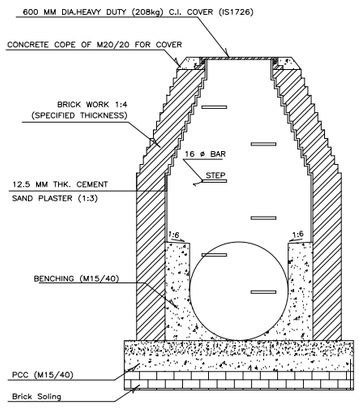

SECTION AT B−B (1:25)

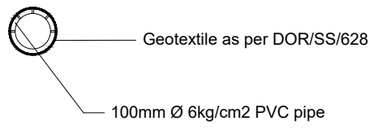

Sub-surface Drainage DoR SS: 1413B

SCALE 1:10

Government of Nepal **Ministry Of Infrastructure Development** **Department Of Roads** **North South Trade Route Improvement Project Directorate** **Minbhawan, Kathmandu**	**PROJECT TITLE-** Detail Engineering Survey, Design and Report Preparation Tribhuwan Rajpath. **TYPICAL CROSS SECTION** **(NON-MARKET AREA)**	**CONSULTANT** **GALAXY ENGINEERING TRADE LINK PVT. LTD.** **KATHMANDU, NEPAL**

CH: 7+000 to 8+054

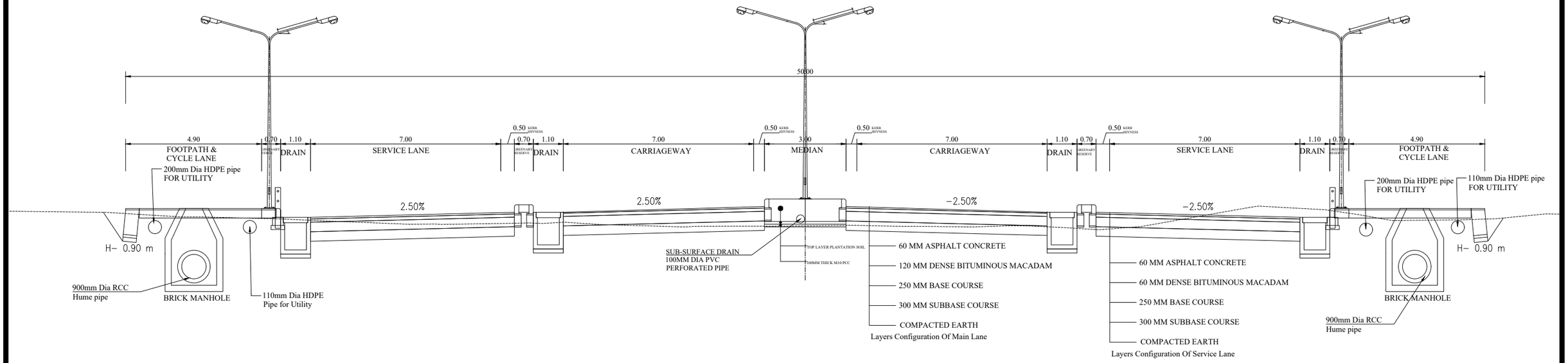

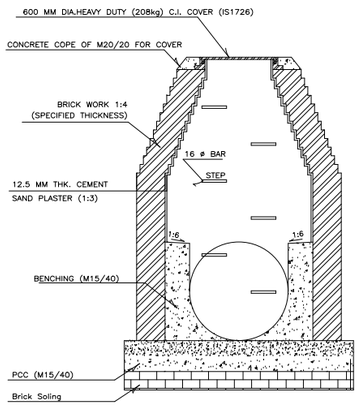

SECTION AT B−B (1:25)

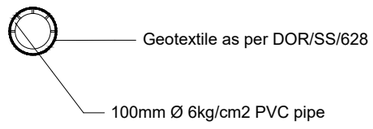

Sub-surface Drainage DoR SS: 1413B

SCALE 1:10

Government of Nepal
Ministry Of Infrastructure Development
Department Of Roads
North South Trade Route Improvement Project Directorate
Minbhawan, Kathmandu

PROJECT TITLE- Detail Engineering Survey, Design and Report Preparation
Tribhuwan Rajpath.

TYPICAL CROSS SECTION (NON-MARKET AREA)

CONSULTANT

GALAXY ENGINEERING TRADE LINK PVT. LTD.
KATHMANDU, NEPAL

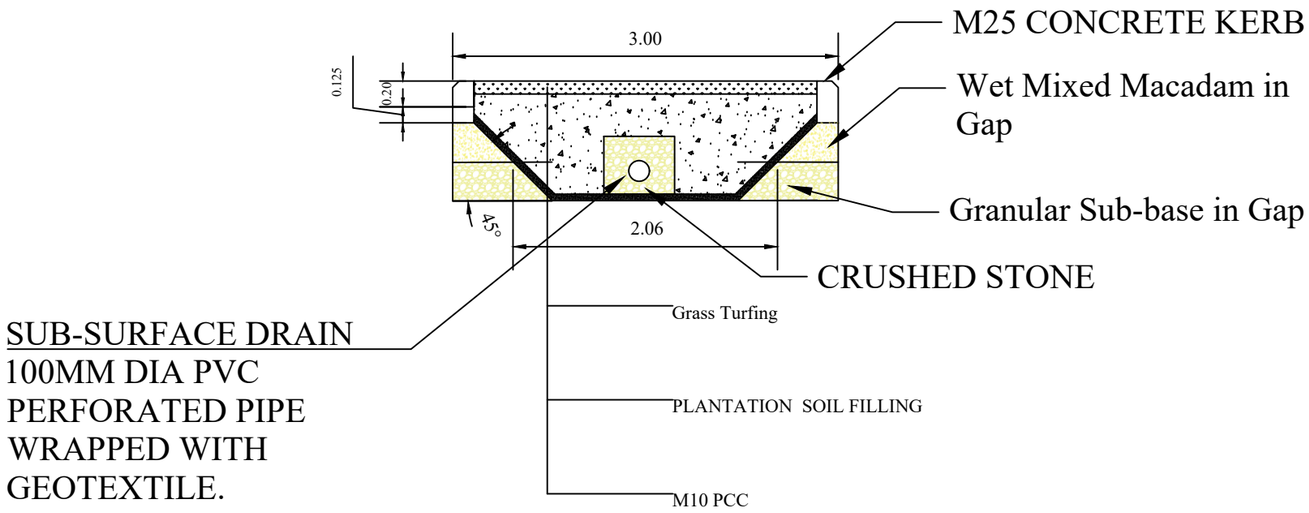

DETAIL FOR 3m. MEDIAN

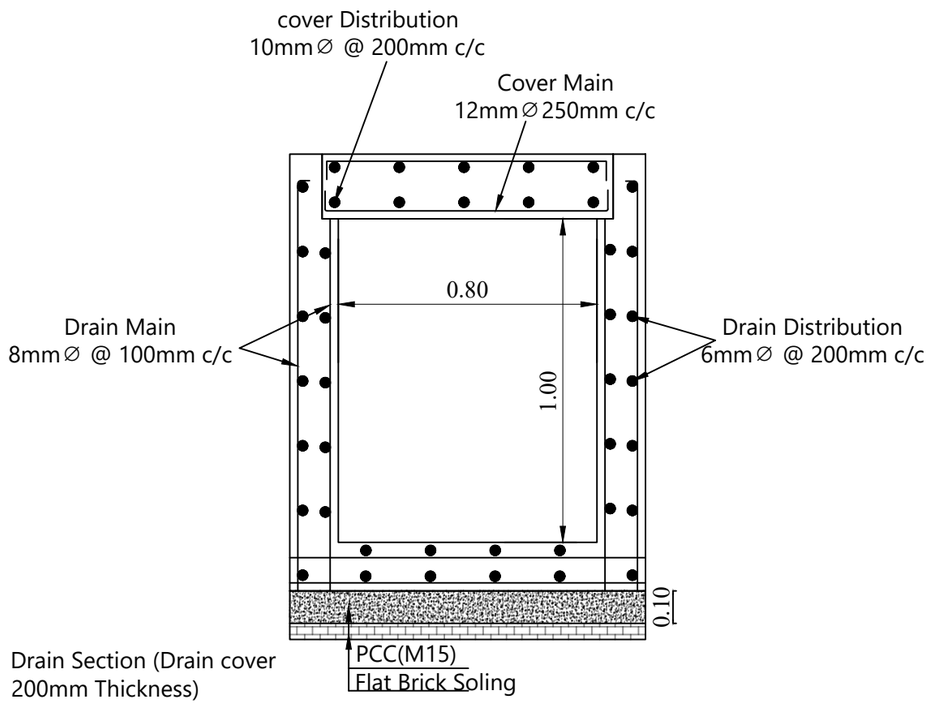

Drain Section (Drain cover 200mm Thickness)
Concrete Grade: M30

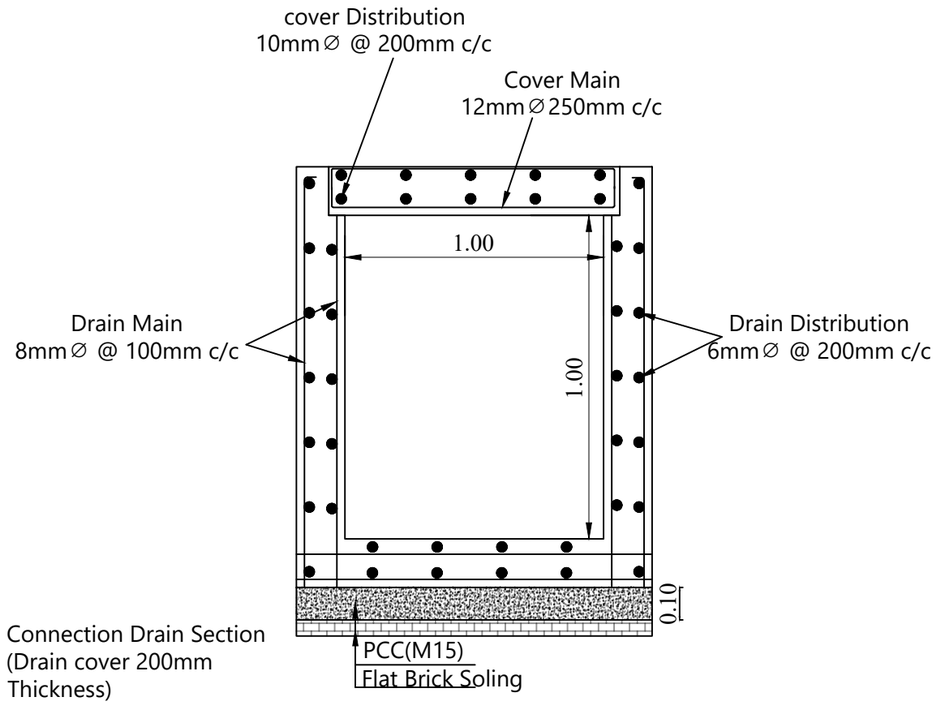

Connection Drain Section (Drain cover 200mm Thickness)
Concrete Grade: M30

Government of Nepal
Ministry Of Infrastructure Development
Department Of Roads
North South Trade Route Improvement Project Directorate
Minbhawan, Kathmandu

PROJECT TITLE- Detail Engineering Survey, Design and Report Preparation
Tribhuwan Rajpath.

CONSULTANT

GALAXY ENGINEERING TRADE LINK PVT. LTD.
KATHMANDU, NEPAL

Part II- Requirements

Section 6: Works' Requirements

This Section contains the Summary of Description of Works, Specifications and Drawings that describe the Works to be procured.

Table of Content

Contents

Section: 6A: Summary Description of Works 3

Section 6B: Standard Specifications 4

Section 6C: Special Provisions to the Standard Specifications 4

Section 100 – General 5

109 Maintenance of the Road 5

111 Environmental Protection Works 5

117 Contractor's Establishment on Site Office, Equipment Yard, workshops, stores etc. 6

118 Provision of Insurances and Securities 6

119 Shop Drawings of Intersections 7

120. GIS Data Creation 8

Section 500 – Quality Control 9

504 Field Laboratory 9

603 Sources of Materials 10

604 Inspection and Acceptance of Materials 10

Section 900 – Earthworks 11

902 Definitions and General Requirements 11

903 Classification of Excavated Material 11

905 Excavation in Cutting 11

909 Forming of Embankment and Other Areas of Fill 11

918 Payment 11

Section 1000: Subgrades 12

1003 Preparation and Surface Treatment of Formation 12

1007 Measurement 12

1201 Granular Subbase 13

1205 Shoulder Island and Median 13

Section 1300 – Bituminous Surface and Base Course 15

1302 Prime and Tack Coat 15

1308 Dense Bituminous Macadam 15

1309 Asphalt Concrete/ Bituminous Concrete 15

Section 1400 – Kerbs and Footpaths 16

1401 Concrete Kerbs 16

1406 Multi Blended Interlocking Concrete Block for Footpath 16

Section 1500 – Traffic Signs, Road Marking, Road Marker Stones and Delineators 18

1501 Permanent Traffic Signs 18

1513 Specifications for Street Lighting System 18

Section 3100 – Miscellaneous Works 22

3105 Railings 22

3114 High Density Poly-Ethylene (HDPE) Pipe 22

3115 Water Management in Median 22

3116 Provisional Sum Items 24

Section: 6A: Summary Description of Works

The Ghantaghar Road to Gandak Chowk is a section of the Tribhuvan Rajpath (NH-41). This highway is under Nepal's Strategic Road Network and section of this highway passes through Parsa district.

The road section starts at the Ghantaghar (Chainage Km 04+000) and ends at Gandak Chowk (Chainage Km 08+054) of Birgunj Metropolitan city of Parsa District.

The Works under this Contract consist of Upgrading Works, which include upgrading the existing two-lane road to a four-lane carriageway with service lanes, construction of structures and all associated works, including the Defects Notification Period.

The Detailed Drawings related to the improvement works are included in Section 6D and are provided in a separate volume. The estimated quantities of individual work items are included in the Bill of Quantities. Descriptions of works, materials, workmanship, testing methods, requirements, and acceptance criteria are detailed in the Standard Specifications (Section 6B) and Special Provisions to the Standard Specifications (Section 6C).

The Summary Description of the main works, however, follows

1) Traffic management provisions during construction including the construction of diversions roads.

2) Roadway excavation and embankment formation for road widening and geometric improvement,

3) Construction of side drains, and retaining structures,

4) Construction of cross-drainage structures,

5) Construction of sub-base, base and bituminous pavement,

6) Supply, erection and installation of road safety measures

7) Intersection works

8) Utility relocation works such as Electricity Poles and utilities and other works.

Section 6B: Standard Specifications

Standard Specifications for this contract shall be the "Standard Specifications for Road and Bridge Works-2073 (with third amendment 2082)" issued under the authority of the Government of Nepal, Ministry of Physical infrastructure and Transport, Department of Roads.

The Standard Specifications may be purchased from the Departments of Roads, Central Road Laboratory, Chakupat, Lalitpur or the Standard Specification may be obtained from DoR web portal www.dor.gov.np.

Section 6C: Special Provisions to the Standard Specifications

The Special Provisions contained herein shall be read in conjunction with Section 6B: the Standard Specifications for Road and Bridge Works-2073 (with third amendment 2082) issued by the Government of Nepal, Ministry of Infrastructure and Development, Department of Roads and shall supplement, replace or supersede the Section 6B: Standard Specifications as appropriate. Where there is any ambiguity or discrepancy between the Standard Specifications and the Special Provisions; the Special Provisions shall have preference and shall govern.

Section 100 – General

109 Maintenance of the Road

Delete the fourth paragraph of Sub-Clause Clause 109 (1) and substitute:

(1) The Contractor shall perform the maintenance works as often as required to keep the carriageway, shoulders, adjoining structures and roadside slopes stable all in proper working order to the satisfaction of the Engineer. The Contractor shall strictly adhere to the stipulations of the latest publication of the document "Road Maintenance Manual" published by the Department of Roads. The Contractor shall perform the Routine and Recurrent Maintenance of existing Road including existing bridge, as per DoR norms including any type of maintenance works to keep the road pavement free from defects during the entire construction period. All maintained pavement surfaces shall be provided with a bituminous surfacing. In the Road stretches where works supervisors and length workers are being engaged by the Department of Roads for the routine maintenance of the Road, the Contractor shall engage them under the same terms and conditions regarding the wages and other facilities as set by The Department of Roads.

(2) Measurement and Payment
Delete the wording of Sub-clause (2) in its entirety and substitute:

Maintenance of the existing road during both the construction period (Routine and Recurrent) and Defect Notification Period (Routine maintenance only) shall be paid at the contract unit rate per km-month commencing on the date for the commencement of the works and terminating at the end of the Defect Notification .
In the event the Contractor fails to perform such maintenance, the Employer shall effect such maintenance works and cost incurred shall be deducted from any payment due under this Contract Item or from any other monies due to the Contractor.

111 Environmental Protection Works

(3) Provision and Maintenance of Camps, Offices, Stores, Equipment Yards and Workshops

Insert new Sub-clause 111 (3a) Provision of Safety Clothing and Equipment

The Contractor shall provide all laborers, supervisors and site staff with suitable basic safety clothing manufactured to an appropriate ISO standard. This shall include but not necessarily be limited to safety helmets and boots. Gloves shall be issued when any form of hazardous material such as cement and bitumen is being handled, and when there is a risk off hand injury, for example when using hammers and chisels. Eye goggles shall be issued when there is a risk of eye injury, such as when using hammers. Breathing masks shall be issued when there are dusty or smoky conditions. In sites with moving traffic or machinery, fluorescent or brightly colored waistcoats shall be issued.

The Contractor shall provide a set of safety clothing to all members of the Employer staff and keep adequate stock for personnel visiting the project. In hot weather the Contractor shall provide appropriate lightweight safety equipment, such as cotton gloves in place of rubber gloves and canvas boots in place of rubber boots.

The Contractor shall be responsible for ensuring that all his employees and the employees of any Subcontractor and any visitor to the site comply with the Engineer's requirement to use safety clothing and equipment at all times. Failure in compliance with the Engineer's instruction in respect of safety clothing and equipment may lead to as us with-holding of payment until the Contractor complies.

Insert new Sub Clause 111 (10a)

(10a) Air Pollution

The Contractor shall avoid creating any high concentration of airborne dust or smoke within 100 meters of a house or other occupied building, or in situations likely to affect people, animals, crops or natural vegetation.
Dust from moving construction plant and road traffic shall be controlled by the regular spraying of water on to road surfaces. The Engineer may instruct additional measures at his discretion. Where earthwork excavations cause dust to blow into areas where it causes a nuisance, the Contractor is responsible for altering the schedule of works to minimize the nuisance. This may involve restricting the timing of work to certain hours of the day or completing works and restoring a dust-free surface as rapidly as possible. The Engineer may instruct additional measures at his discretion. Air quality monitoring shall be carried out.

Insert new Sub Clause 111 (10b)

(10b) Noise Pollution

The Contractor shall take every precaution to control excessive noise resulting in disruption to the local population. All static plant shall be located at least 100 meters from occupied buildings. The Engineer may require the construction of baffles or bunds around noisy plant in order to reduce the pollution caused. The Contractor shall ensure that no employee plays loud music in any residential camp at any time. Noise level monitoring shall be carried out.

(11) Measurement and Payment

Insert the pargraph

Provision of safety clothing and equipment, first aid/medical facilities and other safety measure shall be measured and paid on monthly basis while air pollution control via water sprinkling shall be measured and paid on a kilometer-month under respective items in the Bill of Quantities.

In the event that the Contractor fails to comply these provisions then the Engineer shall withhold the equivalent amount required to carry out those activities from the Contractor's IPC and shall release after they are complied. If the Contractor does not provide them in time as per the Specifications or within the time instructed by the Engineer, the Employer may procure by quotation from third party/i.e. sand deduct the cost incurred from the Contractor's payment including logistics, transportation costs, miscellaneous cost, if any, and administration cost.

Add the following New Clauses after Clause 116 "Supply of Project Record":

117 Contractor's Establishment on Site Office, Equipment Yard, workshops, stores etc.

It is the Contractor's responsibility to acquire land for the siting of all his offices, accommodation, stores, testing facilities, equipment yards and workshops and for all temporary works and for the reinstatement of such land on completion of the Contract to the satisfaction of the owners and of the Engineer. The Contractor shall obtain the approval of the Engineer for the siting of offices, accommodation, stores, testing facilities, equipment yards and workshops before such land is acquired and he shall indemnify the Employer against all claims and charges in respect of the occupation, use and reinstatement of the land. The Contractor is solely responsible for the satisfactory accommodation of all his employees and for complying with all regulations and requirements in this respect.

118 Provision of Insurances and Securities

The Contractor shall provide all necessary Insurances, Guarantees and Securities as are required and detailed in the Conditions of Contract, Bill of Quantities or this Specification, for Upgrading Works.

Measurement and payment for Insurances shall be made on Job basis as provided in the Bill of Quantities .

The price for Insurance includes all expenditures expected in providing and maintaining from Date of Commencement until the end of the Defect Notification Period an insurance of Upgrading Works. Plant and Materials, the Contractor's Equipment, third party properties and personal injury or death, including expenditures resulting from administration work, dealing with and reporting of claims, stamps duties, taxes, etc. The Contractor shall also require providing insurance of his personnel, employees and labours as prescribed in the Contract document. No separate payment shall be made for the insurance of his personnel, employees and labours and are deemed included in other items of the Bill of Quantities.

No separate payment shall be made for Bank Guarantees and Securities that are required as per the Contract. The costing of such Guarantees and Securities are deemed included in other items of the Bill of Quantities.

Measurement of the job payment for item of the Insurance shall be made to the Contractor under the relevant items in the Bill of Quantities upon the submission of the acceptable insurance policies with the proof of payment of insurance premiums to the insurance company from the date of commencement to the end of Defect Notification Period and after approval by the Engineer. The payment of the quoted amount for the provision of insurance shall be made after the Contractor submits and obtains approval from the Engineer of the required insurance policies for the period covering from the Commencement Date to the end of Defect Notification Period and the submission of the proof of the payment of premiums for that period.

The payment shall be made in two installments. The first installment, 70% of the amount under the respective item in the BOQ, shall be made upon approval of the insurance policy by the Employer, the second installment, 30% shall be made after taking over of the Contract by the Employer.

119 Shop Drawings of Intersections

(1) Scope

This Section covers the requirements to be met by the Contractor in relation to the survey, design, detailed layout of civil works, traffic signs and road marking of the intersections along the contract road corridors. The scope also includes the preparation of construction works traffic management plans which include management of regular traffic on existing main and side roads and management of construction traffic and traffic control and guidance schemes in order to ensure safe and acceptable level of vehicular and pedestrian traffic operation around the subject intersection and adjoin sections of roads.

A set of typical layout plans of various types of intersections are included in the drawings. The scope of this Section is to customize these typical designs to each site and produce shop drawings (plans, profile, cross sections, details, layout of traffic signs, road markings) and submit it to the Employer for approval prior to the construction of intersection related works commence.

(2) Land Survey

The contractor shall carry out detailed topographical survey of the intersection sites showing all manmade and physical features. The survey will cover enough area required to determine all necessary elements that may have effect in the design of intersections. The survey map will also show all underground utility services and both permanent and temporary roads/ walkways. The survey plan shall be produced at 1:500 scale with contour interval of 0.5 m or as instructed by the Engineer. Where manmade drains exist, invert levels will be shown and drainage line shown clearly on the plan**.**

(3) Traffic Survey

Before the commencement of construction, Contractor shall undertake 12 hours (commencing 06:00 hrs. and ending 18:00 hrs.) turning movement traffic counts at all intersections identified in

the plans in the manner prescribed by the Engineer. Traffic counts shall be done by pedestrians, cycles/rickshaws, motorcycles, three-wheeler, cars (sedan, jeep, microbus), buses (mini and conventional) and all kinds of trucks (mini tippers, conventional trucks) and reported for the period ending each 15min. Turning movement diagrams shall be plotted by the contractor separately for the AM and PM peak hours. Where peak hours are not distinct, contractor shall seek advice from the Engineer and turning movement diagrams for hours ending specified period shall be presented together with the tabular data of turning movements. Two sets of tables and diagrams (one with type of vehicles and other with Equivalent Passenger Car Units (for vehicles) shall be produced and submitted to the Engineer for reference, record and approval.

(4) Drawings

Using the type designs of the intersections (three ways median open, three ways median closed, four ways median open, four-way median closed at sections with and without service roads for four laning sections), the contractor shall prepare shop drawings of each intersection and submit to the Employer for review and approval. Shop drawings of four way or three-way intersections with Basic Right (BAR) Turn or Basic Left (BAL) Turn or both treatments to be constructed along two lane sections of road without service roads shall also be prepared by the contractor and submitted to the Engineer for review and approval. Shop drawings shall be prepared using appropriate CAD software. Hand sketches shall not be accepted. Four color copies shall be submitted to the Engineer for review and approval at least 21 days prior to the date the contractor wish to commence work at the intersection site.

Shop drawings shall include but are not limited to:

• Layout Plans (1:500 or larger as directed) showing all lines and levels as required to enable lay out of the intersection at site accurately;

• At least nine cross sections (for three-way intersections) and twelve cross sections (for four ways inter sections);

• Traffic Signs and road marking layout plans (separate to the lay out plans showing civil works/ electrical works);

• Profile / Longitudinal section of each leg (for a length of 40 m for each leg of side roads and 200 m along each leg from the center of intersections);

• Any other details requested by the Engineer; and

• Traffic Management Plan as per the provision of Section102

120. GIS Data Creation

The Contractor shall prepare and submit to the Employer 2 sets of softcopies in original formats drawing showing newly constructed road, drainage structures (Culverts, Bridges, side drains, subsurface drains), utilities (electrical, telecommunication, water supply and sewerage lines etc.) in a format (*.shp) suitable for transferring to GIS database and including as built drawing at the completion works.

The “GIS Data Creation” shall be paid at its respective contract unit rate which shall be full and the final compensation to the Contractor as per Clause 112 and for the cost of all activities involved for satisfactory completion of this item.

Section 500 – Quality Control

504 Field Laboratory

Replace the clause 504 Field laboratory (1),(6) and(7)

(1) General Requirements

The Contractor shall provide, operate and maintain an adequately equipped site Laboratory complete with all utilities, services apparatus and fittings as set out in Table 5.1 List of Laboratory Equipment of Standard Specifications to undertake the required testing to ensure the quality of the materials and the works. The laboratory space including lab office and lab arrangement shall be with plinth area of approximately 200 sq m with two (2) rooms plus one l large hall, outside covered veranda and toilet bathroom. The Site Laboratory shall be located within 1 Km of the site and the lab building may be located at the rented building or newly constructed on rented land. The laboratory shall be available up to the end of the project.

The site laboratory shall be ready to use within 60 days from the date of the Employer's notice to commence the Works. Alternative arrangement for testing shall be made by the date of commencement of works.

The Contractor shall be fully responsible for the equipment including:

- ➢ Maintaining, calibrating and servicing equipment as required.
- ➢ Repairing all defects including accidental damage as required.
- ➢ Replacing any lost or stolen items.
- ➢ Effecting insurance of the equipment against damage or loss.
- ➢ The tests which cannot be performed at site shall be carried out off the site at renowned laboratory acceptable to the Engineer.

The site lab shall be made available for testing as long as it is required including any period after the Completion of construction during which it is required for final measurement purposes. At the completion of the project, ownership of all laboratories and equipment shall revert to the Contractor.

(6) Measurement

Providing laboratory space, maintaining and operating the material testing laboratory at site, etc., all complete, shall be measured on monthly basis as provided in the Bill of Quantities. It includes establishing the site laboratory which includes construction/renting of lab building, required consumables, maintenance and operation of the site laboratory and supply of laboratory personnel and staff at laboratory for day to day works and testing etc. It includes supply and fixing of a complete set of equipment, furniture and other requisite items, etc.

(7)Payment

Payment for providing laboratory space, maintaining and operating the material testing laboratory at site, additional testing as required etc. all complete shall be made against the respective item of the Bill of Quantities Payment shall represent full and final payment for the Contract Items and the Contractor shall not be entitled to any further compensation. The Contractor shall provide such facilities during the extended time period as long as the Employer may require. In the event the Contractor fails to maintain, repair or replace any equipment item, the Employer shall carryout such maintenance, repairs or replacement and the Employer shall deduct the cost from any monies due to the Contractor.

Section 600 – Materials and Testing of Materials

603 Sources of Materials

Add the following at the end of the last paragraph of this Clause:

"These provisions regarding delivery and haulage shall not apply to any material salvaged from the site of the works and the Contractor shall be entirely responsible for all haulage and costs of haulage of such salvaged material.

604 Inspection and Acceptance of Materials

Delete the second and third paragraphs of this Clause and substitute with the following:

"A preliminary inspection of the materials may be made at the source for the convenience and accommodation of the Contractor, but neither the presence of the Engineer nor the subsequent testing of work or materials by the Engineer shall relieve the Contractor of his responsibility for furnishing work and materials complying with these Specifications. The representative of the Engineer shall have free entry at all times to those parts of any plant which concern production of any materials for incorporation into the Works and the Contractor shall ensure that any order for materials which he places includes the necessary provisions to ensure that such free entry is available."

Section 900 – Earthworks

902 Definitions and General Requirements

At the end of the first sentence of Sub-clause (8) add the following:

"The surveyed points thus obtained shall be used to correct or augment the existing survey data referred to in Clause 106."

903 Classification of Excavated Material

Delete content under the sub-clause 903 and replace with the following:

"All excavated material shall be classified in one category: All Types of Soil"

905 Excavation in Cutting

Add end of the Clause:

(9) The contractor should ensure the stability of existing structures, pavement etc. during the Excavation in Cutting.

909 Forming of Embankment and Other Areas of Fill

Add the following additional Sub-clause:

"(10) All materials which are deposited in place prior to compaction shall be evenly spread over the whole of the designated area for the layer concerned and in such quantity that the thickness of any one layer, when measured after compaction, shall comply with the requirements specified. Any new layer less than 75 mm in compacted thickness shall be bonded to the previous layer by scarifying the previous layer to a depth not less than 25 mm or to such greater depth so that the total compacted thickness of the new layer plus the scarified portion of the previous layer will not be less than 100 mm."

The material obtained from the roadway excavation as per the design may be used by the Contractor for the purpose of roadway embankment provided that the excavated soil meets the requirements of the Specification. Excavation of existing road shall be carried out in accordance with these Specifications. Costs of reusing material set aside as embankment shall be deemed to be included in the rates of those items.

918 Payment

At the end of Sub-clause (1) add the following:

The payment for earthwork excavation shall be made in two (2) installments. First installment 80% of the unit rate quoted in the Bill of Quantities shall be made after carrying out excavation works. The second installment of remaining 20% of the unit rate quoted in the Bill of Quantities shall be made after reuse, haulage and safely dispose of the material at the locations approved by the Engineer.

Section 1000: Subgrades

1003 Preparation and Surface Treatment of Formation

In the opening paragraph delete the words of the first sentence following "the sub-base or…." to the end of the sentence and replace with "any embankment or pavement layer".

Add the following immediately after the opening paragraph:

"Preparation of formation shall also apply to the preparation of the base of embankment and shall include scarification, spreading and compaction of material across the full width of the layer or area. If instructed by the Engineer, any processing of in-situ material that meets the Specification for subgrade will include scarification to a depth not less than 150 mm or to a depth as agreed with the Engineer, watering, shaping and compaction of the material. In this case, the measurement for the preparation of formation shall be considered included in the rate for embankment filling works under Clause 909 [Forming of Embankment and Other Areas of Fill], and no separate payment shall be made for the preparation of formation."

(1)Formation of Loose Untreated Materials

Add after first sentence in the second paragraph ending with words "200 mm compacted depth" the following:
Where the new formation is to abut an existing embankment as part of road widening, the Contractor shall ensure that any new layer of fill shall be benched into the old embankment for formation in a manner that comply with Clause 912 of these Specifications.

At the end of Clause 1003 add the following additional Sub-clauses:

(6)Widening to Embankment and Use of Existing Pavement Material

Widening of the road embankment, where required, shall proceed from the formation in the following manner:

a) Scarify the existing sub-grade up to a depth of 300 mm and re-compact it as described in Sub-clause 1003(1).
b) If the sub-grade is very weak, the sub-grade shall be strengthened by capping layer (Clause 1004) or by blending the scarified sub-grade material with granular material pursuant to Clause 1002 (5) Mechanical Stabilization as per the instruction of the Engineer.

No separate payment shall be made for works carried out under Sub-clause 1003 (6) (a). Measurement for the subgrade layer shall be in accordance with the relevant Clauses of the Specification. The contractor may use existing pavement material for the construction of the road embankment, providing the material so used meets the required Specification.

1007 Measurement

Delete the Contents in the Section 1007 and replace with the followings:

1) The scarification of the existing blacktop surface shall be measured in square meter by multiplying average of widths taken at intervals of 10 meter along the center line of the road multiplying by the respective lengths.

2) Subgrade preparation in existing pavement in cutting shall be made in square meter by multiplying average of widths taken at intervals of 10-meter multiplying by the respectivelengths.

3) Whatsoever written above, no separate measurement for subgrade preparation shall be made if the formation level is obtained after roadway embankment.

Section 1200 – Subbase, Base, Hard Shoulder and Gravel Wearing Course

1201 Granular Subbase

(1)Scope

Add an additional paragraph at the end as follows:

The scope of works includes:

(a) Construction of new sub base in two layers as instructed by the Engineer over carriageway and shoulder in accordance with the stipulations laid down in Clause 1003 and relevant Sub Clauses;
(b) Construction of sub base layer over shoulders, cycle lane or as shown in the drawing or as instructed by the Engineer utilizing the base material from the existing pavement in accordance with the stipulations laid down in Clause 1003 and relevant Sub Clauses**.**

(2) Sources of Material

Add to the second paragraph after "……. or from such other sources"

"or from base material obtained during scarification of existing pavement surface base layer if satisfy the required specification for sub base"

(3) Material Requirement

Add at the end the following paragraph:

"The specific grading requirement shall be controlled before and after the material has been transported, stockpiled, mixed, spread and compacted"

(4) Laying and Compacting

Add the following at the end:

The Contractor shall protect and maintain the subbase at his own expense. Maintenance shall include the immediate repair of any damage or defects which may occur and shall be repeated as often as is necessary to keep the subbase continuously intact. Repairs shall be done in such a manner that will ensure restoration to an even and uniform surface and may involve scarifying, watering and re-compacting.

1205 Shoulder Island and Median

Add Sub Clause 3a after sub clause 3[Construction of shoulder]

3a. Construction of Island and Median

Island and median filling material shall be placed and compacted in layers in compliance with the requirement of clause 910 [Compaction of embankment and other area of fill/back fill]. The filling shall be placed in by such method which shall avoid loading the structures (Kerb stone, sub surface drain and geo membrane layer, abutment of culverts, retaining structures near the bridges, abutments of box bridges and twin bridges) in any manner which may affect its stability or overload its underlying foundation material or substructure. The back fill in front of such structures shall be placed first to avoid the possibility of forward movement. Precaution shall be taken to prevent any wage action against the upright surfaces, and the slopes of bounding the excavation (if any) shall be stepped as directed by the Engineer before filling is placed.

6 Measurement and payment

Add following paragraph at the end of the sub clause

Construction of island and median soil shall be measured in cubic meter by taking cross section at interval of 10m or as directed by the Engineer and shall be paid at their respective contract unit rate which shall be full and final compensation to the contractor as per clause 112 of the Specification.

Section 1300 – Bituminous Surface and Base Course

1302 Prime and Tack Coat

(4) Spraying of Prime Coat and Tack Coat

Add the following:

Spray record sheets containing details of ambient temperature, spraying temperature, areas sprayed and quantities of materials used shall be submitted by the Contractor on a daily basis for approval by the Engineer.

(5)Curing and Binding of Prime Coat

Add the following at the end of first paragraph
"Following the prime coat application, the primed, un-blinded surface shall be allowed to cure for a minimum 24 hours, or for a time as agreed with the Engineer, without being disturbed so as to allow the prime coat to fully penetrate the surface unless full penetration and curing has taken place in the opinion of the Engineer in a shorter period. If after this period the prime coat has not sufficiently cured to permit traffic without being picked up, and the Contractor wishes to open the section to traffic, the Engineer shall either instruct that the area be left for a further period until the prime coat has fully penetrated and aired to allow traffic to pass or shall permit the Contractor to place mineral aggregate for blinding, at his own cost, applied at a rate and in the places instructed to blot up the excess bitumen."

(7)Testing

Add the following at the beginning:
Samples of the bituminous material that the Contractor proposes to use, together with a statement as to their source and character shall be submitted and approved before use of such material. The Contractor shall require the manufacturer or producer of the material to furnish material subject to this and all other pertinent requirements. Only satisfactory materials, so demonstrated by service tests, shall be acceptable.
The Contractor shall furnish vendor's certified test reports for each consignment of bituminous material supplied. The reports shall be delivered to the Engineer before permission is granted for use of the material. The furnishing of the vendor's reports shall not be interpreted as basis for final acceptance. All such test reports shall be subject to verification by testing samples of materials received.

1308 Dense Bituminous Macadam

(2) Material

Replace first sentence of (e)(i) aggregate grading and binder content by following:

"When tested in accordance with IS:2386 Part I (wet sieving method), the combined grading of the course and fine aggregate the filler for the particular mixture shall fall within the limits given in Table 13.28 for grading 2."

1309 Asphalt Concrete/ Bituminous Concrete

(2) Material

Replace last sentence of (e) aggregate grading and binder content by following:

"The grading shall be 1 as per table 13.33."

Section 1400 – Kerbs and Footpaths

1401 Concrete Kerbs

Replace the grade M20/20 with M25/20 in first paragraph of Clause 1401(2)

Add following at the end of Clause 1401(2):

"The paint shall be non-reflectorized type and shall confirm NS: 112."

Add following at the end of Clause 1401(3):

"The road Kerb stones and shall be painted in accordance with IRC 35:2015."

Add following at the end of the first paragraph of Clause 1401(4):

"The painting material shall be tested in accordance with the relevant standards specified and shall meet the prescribed criteria. The Contractor shall furnish necessary test certificates as required by the Engineer."

Add following word at the start of the first paragraph of Clause 1401(5):

"Painted" and replace "Concrete" by "concrete".

Made following correction at line 3 of Clause 1401(6):

After "excavation" remove "and" and add ",", after "backfilling" remove "," add "and" and add "painting,".

Add new "Clause 1406 Multi Blended Interlocking Concrete Block for Foothpaths:" after "Clause 1405: Cycle Tracks" as follows:

1406 Multi Blended Interlocking Concrete Block for Footpath

(1) General

Multi Blended Interlocking Concrete Block Pavements and tactile tiles shall be used in footpaths for the pedestrians or as per the instruction of the Engineer. Laying of the blocks shall be done, precisely at the indicated level and profile. The blocks shall be laid to the pattern as shown in the drawings or as directed by the Engineer. The blocks shall be laid as tight as possible to each other. The maximum joint width shall be limited to 4 mm. Fine angular sand as per specification shall be brushed into the joints, and thereafter compaction shall be done with a vibrating plate compactor on a clean surface.

(2) Design Parameters

(a) Block Thickness

The thickness of interlocking blocks shall be 60 mm and tactile shall be 40 mm. The blocks shall be constructed with M 25/20 grade concrete and shall confirm Nepal Standard. All blocks should be of the same thickness, with a maximum allowable tolerance limit of ±3 mm.

(b) Stone dust Bedding and Jointing

A layer of stone dust bedding is provided between block pavement and base soling to provide a cushion between the hard base and the paving blocks and to correct the permitted surface unevenness of soling.

The stone dust bed should not be too thick lest it would be difficult to control the surface level of the blocks. A layer thickness of 50 mm is found to be satisfactory. The stone dust used should be free from plastic clay and should be angular type.

Joints between blocks are filled by stone dust. The joints are normally 2 to 4 mm wide.

(c) Base Construction

This layer is the important structural layer of a block pavement. The material used for base construction consists of Sub base material meeting the standards mentioned in Sub clause 1201.

(3) Construction

(a) General

The construction of interlocking concrete block involves preparation of sub-grade and sub-base layers, stone dust bedding and finally the laying of blocks. The block paving can be done entirely by manual labour. However, for efficient construction work, the work force has to be properly trained for this specialized job.

(b)Preparation of Sub-grade

Sub-grade should be compacted in layers of 150 mm to 200 mm thickness as per the use of compaction equipment. The prepared sub-grade should be graded and trimmed to a tolerance of ± 20 mm of the design level.

(c) Sub base laying

The sub base course shall be constructed as per Specification 1201.

(d)Placing and Screeding of Bedding

Stone dust bedding should not be used to fill-up local depressions on the surface of a sub-base layer. The depressions should be repaired in advance before placing stone dusst. Stone dust to be used should be uniformly in loose condition and should have uniform moisture content. Best moisture content is between 6 to 8 percent. The processed stone dust is spread to the required thickness. The stone dust is subsequently compacted with plate vibrators weighing 0.6 tonnes or more.

(e) Laying of Blocks

Blocks can be laid generally by manual labour.

As far as possible, laying should proceed in one direction only, along the entire width of the area to be paved.

While locating the starting line, the following should be considered:

• In case of irregular shaped edge restraints or strip, it is better to start from straight sting line.

• Influence of alignment of edge restraints on achieving and maintaining laying bond.

(4)Measurement and Payment

The measurement and payment of the interlocking concrete block and tactile shall be made in square meter. Payment made at the contract unit rate for interlocking concrete block shall be payment in full compensation for furnishing all labour, material, tools, equipment at site conforming to the Specifications section 112 and as per approved drawings or as directed by the Engineer. The sub base shall be and measured in cubic meter and shall be paid under the respective item in the BoQ.

Section 1500 – Traffic Signs, Road Marking, Road Marker Stones and Delineators

1501 Permanent Traffic Signs

(2) Materials

(a) Mounting Post

In first line delete: "either 50mm internal diameter steel tube of "heavy category or"

Then after Delete "Steel tube shall comply with IS: 1161

(8) Erection of Traffic Signs.

(b) Excavation and Backfilling

Replace the grade M10/40 with M15/40 in second paragraph.

Add followings new Clauses after "1512 Wire Rope Crash Barrier":

1513 Specifications for Street Lighting System

(1) Scope This specification covers the design, supply, installation, testing, and commissioning of street lighting systems along National Highways in Nepal. The system shall be efficient, durable, and compliant with relevant standards to ensure adequate illumination, safety, and operational economy.

(2) Applicable Standards

The design and implementation of the street lighting system shall conform to the latest revisions of the following Indian Standards:

• IS 1944 (Part 1 & 2) for lighting of public thoroughfares;

• IS 10322 (Parts 1 to 5) for luminaries and general requirements;

• IS 2309 for lightning protection;

• IS 3043 for earthing;

• IS 371 for street lighting poles;

• IS 731 for porcelain insulators;

• IS 2551 for danger notice plates; and

Additionally, the provisions of the National Electrical Code (NEC) of Nepal and regulations of the Nepal Electricity Authority (NEA) shall be followed.

(3) Components and Materials

Poles:

The poles shall be galvanized iron or hot-dip galvanized steel, and may be tubular, conical, or hexagonal in shape. The pole shall comply IS 2713 (Part II)-1980, 410 SP-52. The foundation shall be of cast-in-situ concrete with base plate, anchor bolts, and template. The coating shall be hot-dip galvanized with a minimum thickness of 70 microns. The design shall comply with IS 2713 or IS 371 and be capable of withstanding wind loads as per IS 875.

Luminaires:

Luminaires shall be of the LED type with ingress protection of IP66. The wattage shall be 100W. The color rendering index shall be at least 70, and the color temperature between 4000K

and 6000K. Power factor shall be at least 0.95. Housing shall be made of pressure die-cast aluminum, and the lens shall be either polycarbonate or PMMA. All luminaires shall conform to IS 10322.

Control Gear:

Each lighting point shall include an individual photocell or be controlled centrally using a timer-based automatic control system. Adequate protection shall be provided against over-voltage, over-current, surge, and short circuits. A surge protection device of rating between 10 kV and 20 kV shall be used. Control components shall conform to IS 15885. Street Lighting Systems automatically switched on and off and auto dimming option,

Cables and Wiring:

All wiring shall use XLPE insulated, armored cables made of aluminum or copper. The cable size shall be determined based on load and voltage drop calculations. The cables shall have a voltage grade of 1.1 kV and be laid in HDPE conduits or ducts, or buried in trenches with adequate protection. Relevant IS codes such as IS 7098 and IS 694 shall apply.
Earthing:
Each pole shall be individually earthed using a 25 mm diameter GI rod or copper plate, and the earth resistance shall not exceed 5 ohms. All earthing installations shall comply with IS 3043.

Feeder Pillars:

Feeder pillars shall be weatherproof, lockable enclosures suitable for outdoor installation. They shall contain MCBs, MCCBs, and energy meters as required and conform to IS 8623.

(4) Illumination Levels

As per IS 1944 (Part 1), the recommended illumination levels are as follows: For expressways and major highways, the average illumination shall be between 20 to 30 lux with a minimum uniformity ratio of 0.4.

(5) Spacing Between Street Lights

The spacing of Street Light shall be: 35.00 m. The layout may follow as instructed by the Engineer, single-sided, staggered, or opposite arrangements depending on road width and design preference.
The uniformity ratio (minimum to average illumination) must be 0.4 or higher. Pole outreach arms, typically between 1.5 and 2.0 meters as per the site condition and instructed by the Engineer, are used to improve light coverage and reduce required pole numbers.

(6) Installation

The pole foundations shall be installed as per the IS 2713 (Part II)-1980, 410 SP-52. The poles shall be aligned correctly and installed vertically. Cables shall be laid at a minimum depth of 750 mm and protected with tiles and warning tape. Cable joints shall be avoided, and where necessary, resin-cast straight joints shall be used. Luminaires shall be fixed and adjusted for optimal light distribution and uniformity.

(7) Longitudinal Ducts for Electricity Supply

To ensure a safe, durable, and easily maintainable infrastructure for street lighting power supply along highways, longitudinal ducts shall be provided as per the following specifications:

7.1 General Requirements:

Longitudinal ducts shall be laid along the length of the highway, generally within the utility corridor of the right-of-way (RoW), preferably in the median. The duct shall facilitate the safe housing of electrical cables, reduce the need for repeated trenching, and allow future upgrades with minimal disturbance to

traffic or pavement.

7.2 Duct Material:

The duct shall be made of HDPE (High-Density Polyethylene) or PVC (Polyvinyl Chloride) conforming to the following standards:

• HDPE Ducts: IS 4984 – Specification for HDPE pipes for potable water (also used for cable ducts)

• PVC Ducts: IS 9537 (Part 3) – Specification for rigid PVC conduits for electrical wiring HDPE ducts shall be of minimum 50 mm inner diameter, Class PE-80/100, with a minimum wall thickness of 3 mm. multi-duct arrangements (e.g., 2-way, 4-way) may be adopted using spacers and encased in concrete, depending on future expansion needs.

7.3 Laying of Ducts:

• The ducts shall be laid at a minimum depth of 750 mm below ground level.

• In carriageways or high-traffic areas, ducts shall be encased in M15 concrete (100 mm thick all around) for protection.

• Ducts shall be laid continuously with gentle bends, avoiding sharp turns to facilitate cable pulling.

• Draw ropes or nylon pull wires shall be provided in all ducts to allow easy cable installation.

• Markers or route indicators shall be placed at regular intervals (every 50 meters) and at junction boxes.

7.4 Junction and Pull Boxes:

• Reinforced Concrete (RCC) or Precast Polymer Concrete Pull Boxes shall be provided at intervals not exceeding 100 meters, at changes in direction, and near pole locations.

• Each pull box shall have a cover with "Street Lighting" embossed and be installed flush with the ground surface.

• Drain holes and cable entry sleeves shall be provided for proper drainage and cable protection.

7.5 Cable Entry into Poles:

Cables from the longitudinal duct shall rise through GI or PVC conduits from the pull box into the lighting poles through a bottom access door. All terminations shall be properly sealed using cable glands to prevent water and dust ingress.

7.6 Electrical Separation:

Where other utilities (e.g., telecom, optical fiber, water pipelines) exist, a minimum horizontal clearance of 300 mm and vertical clearance of 150 mm shall be maintained between the power duct and other utility ducts, in accordance with NEC Nepal and standard utility separation guidelines.

7.7 Record Keeping:

As-built drawings showing the layout, depth, and location of ducts and pull boxes shall be maintained and handed over for future reference and maintenance.

(8) **Testing and Commissioning**

Testing shall include insulation resistance tests for all wiring, measurement of earth resistance for each pole, and functional testing of luminaires and control systems. A final inspection shall be conducted by the Engineer, and the lighting system shall be commissioned only after formal

approval.

(9) Operation and Maintenance

The contractor shall submit an operation and maintenance manual, warranty certificates, and as-built drawings. The minimum warranty period shall be five years for LED luminaires, seven years for poles and galvanizing, and as per applicable IS standards for solar lighting components.

(10) Measurement and Payment

Measurement shall be based on actual units, such as the number of poles installed with complete fittings and the total length of cable laid. Payment shall be made as per the contract Bill of Quantities (BOQ), upon satisfactory completion and acceptance of the work. The contract price and/or rates shall be the full and the final compensation to the Contractor as per Clause 112.

Section 3100 – Miscellaneous Works

3105 Railings

(5) Measurement

Delete the whole content of (6) "Measurement" and replace with the followings:

Measurement for GI Pipe Railing with RCC Posts

GI Pipe Railing with RCC Post shall be measured in linear meter for complete railing set including GI pipes and RCC posts installed and accepted. Railing shall include both horizontal and vertical members, posts including bolts, nuts, fittings, etc. as shown in the Drawings. It also includes the excavation for the foundation of the RCC post, preparation of the foundation and backfilling with the concrete of grade as shown in the Drawings to the satisfaction of the Engineer

Add new Clauses after Clause 3113 "Plum Concrete" as follow:

3114 High Density Poly-Ethylene (HDPE) Pipe

High-density polyethylene pipe shall comply with series as specified by NS40/2040. Jointing of pipes shall be done by fine-cutting and heating following with equipment complying with the prescription of the HDPE pipe manufacturer. Pipes may be jointed with angles to fit the requirements of the terrain, but angles shall not exceed the maximum specified by the manufacturer. The joints shall be water tight and develop the same strength as unjointed HDPE material. The method of jointing shall be approved by the Engineer prior to starting the works.

For sub-surface drain purpose, pipes shall be provided with holes of minimum 5 mm diameter. The pipes shall be perforated by drilling minimum 50 holes per meter length on the upper half of the pipe in a staggered pattern uniformly distributed. The Engineer might adjust these specifications according to the site conditions.

The measurement and payment of HDPE pipe shall be made in meter (m) including jointing, fitting etc. all complete. The contract unit rate shall be the full and the final compensation to the Contractor as per Clause 112 to complete the works as per these Specifications.

3115 Water Management in Median

(1) Scope

This clause shall cover the work related to the construction of rain water management structures in median of the road.

The work consists

a) Laying of M10 PCC as per drawing and

b) Construction of sub-surface drain.

Sub-surface drains shall be of close-jointed perforated pipes, surrounded by crushed stone material laid in a base of the median. PCC M10/40 as important components of base liner system as per design, drawings for rainwater protection and leachate drainage to the leachate collection pipes (Drain Pipes).

(2) Material

The materials used for construction of sub-surface drains shall comply with following requirements:

(a) Filter Material

Filter materials used in drains shall comply with the requirements specified in Clause 3110**.**

(b) PCC M10/40

Construction shall be as given in drawing and as specified in clause 2000.

(c)Geotextile

The geotextile fabric shall be a woven or non-woven or knitted fabric consisting of long-chain polymeric filaments or yarns such as polypropylene, polyethylene or polyester or any combination thereof, formed into a stable network such that the filaments or yarns retain their relative position to each other.

(d)Drain Pipe

Perforated pipes for the drains shall be of PVC 100 mm internal diameter. Holes for perforated pipes shall be on one half of the circumference only and conform to the spacing indicated on the drawings. Size of the holes shall not ordinarily be greater than half of D85 size of the material surrounding the pipe, subject to being minimum 3 mm and maximum 6 mm. D85 stands for the size of the sieve that allows 85 percent of the material to pass through it.

Jointing of pipes shall be done by fine-cutting and heating following with equipment complying with the prescription of the PVC pipe manufacturer. The joints shall be watertight and develop the same strength as unjointed PVC material. The method of jointing shall be approved by the Engineer prior to starting the works. Drain pipes shall be provided with holes of minimum 5 mm diameter. The pipes shall be perforated by drilling minimum 50 holes per meter length on the upper half of the pipe in a staggered pattern uniformly distributed. The pipe shall be wrapped with the Geotextile. The Engineer might adjust these specifications according to the site conditions.

(a) Back Fill Material

Backfill material shall consist soil free of organic material, clay balls or other deleterious matter.

(3) Construction

The detailed layout of the rain water management in median works shall be as instructed by the Engineer, based on the general layout given in the Drawing.

The work shall start with construction at outlet side and then go upgrade.

The line and level for laying of PCC and sub-surface drain shall be fixed.

Laying of geotextile wrapped half perforated PVC pipe of 100mm internal diameter above the PCC as shown in drawing shall be started at the outlet end and proceed towards the upper end, true to the lines and grades specified. Before placing the pipe, filter material shall be laid for the full width of the base of the median and compacted. Unless otherwise shown on the Drawing, the thickness of this layer shall be 150 mm.

After the pipe installation has been completed and approved filter material shall be placed to the required level in horizontal layers not exceeding 150 mm. The minimum thickness of material above the top of pipe shall be 300 mm.

For remaining depth, the filling works shall be carried out as per clause 1205 of this specification.

The finished slope shall be reshaped to facilitate proper surface drainage towards drains/culvert /bridges.

(4) Tests and Standard of Acceptance

Copies of the manufacturer's certificates for geotextile and drain pipe to be used while shall be furnished by the Contractor. In addition, the Engineer may ask for testing in independent laboratories. Concrete shall be tested as per specification 2000. All test results shall meet the specified requirements.

Minimum one set of tests for gradation analysis and compaction of filter material shall be checked as per Table 5.2. And/or every change in source of material. The results shall meet

specified requirements.

(5) Measurement

Concrete laid and accepted as specified in the Drawing or directed by the Engineer shall be measured in cubic metre. Laying of Geotextile shall be measured in linear meter and wrapped PVC pipe including filter material etc shall be measured in linear meter.

(6) Payment

Laying of Geotextile, wrapped PVC pipe including filter material and concrete laid shall be paid at the respective contract unit rates. The contract unit rates shall be the full and the final compensation to the Contractor as per Clause 112 to complete the works as per these Specifications.

3116 Provisional Sum Items

All Provisional Sum (PS) item(s) shall be executed only with the prior written approval from the Employer.

The Employer reserves the right to execute PS item(s):

a) Through the service provider under this Contract, or
b) Directly by the Employer
c) Through a third party or a party selected by employer through a bidding process, with payment to be made from the corresponding PS item(s)

When PS item(s) are executed by the Service Provider, the Employer may seek competitive rates or quotations before authorizing execution.

If a PS item(s) is not executed by Service Provider, no overhead payment shall be made to the Service Provider for such PS item(s)

Where a PS item is executed by the contractor, the work shall be valued based on actual costs. The contractor shall be entitled to an additional **5% for overhead charges and profit** calculated on these actual costs, subject to providing invoices and receipts.

All the PS expenditures shall be subject to verification and approval by the Employer prior to payment.