GANESH KHOLA BRIDGE

CHAINAGE : 3+002

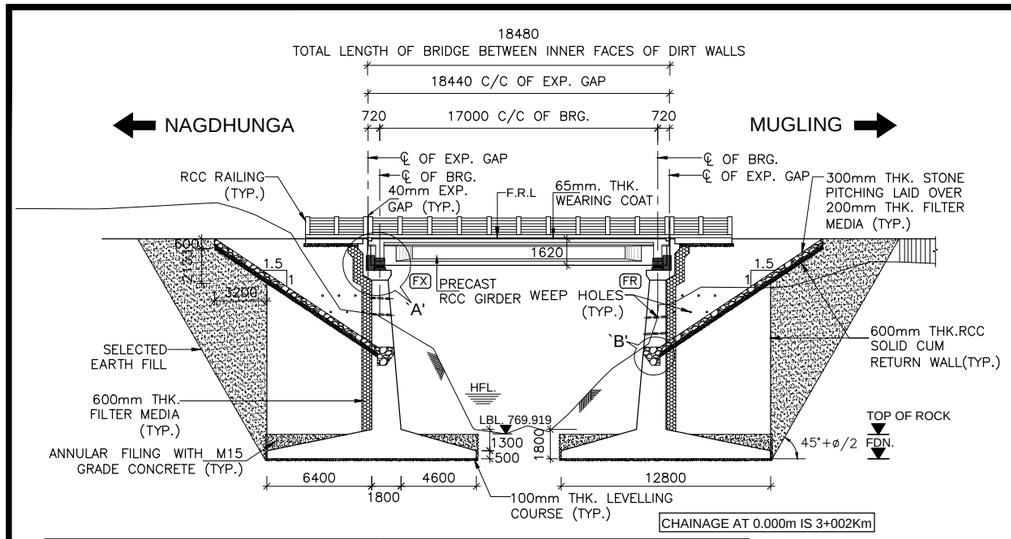

FINISHED ROAD LEVEL (m)	781.911	781.911	781.911
GROUND LEVEL (m)	777.093	769.919	777.437
FOUNDING LEVEL (m)	768.400		768.400
CHAINAGE (m)	(−)8.500	0.000	8.500

LONGITUDINAL ELEVATION OF PROPOSED BRIDGE

(SCALE 1:250)

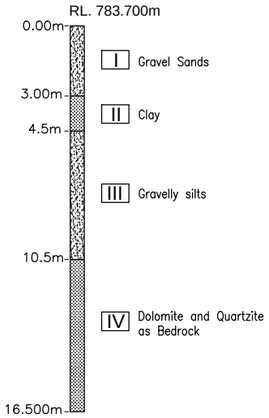

BH-01

(SCALE 1:175)

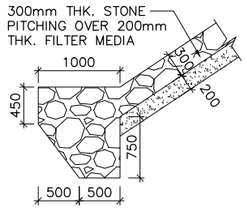

DETAIL-`B'

(SCALE 1:50)

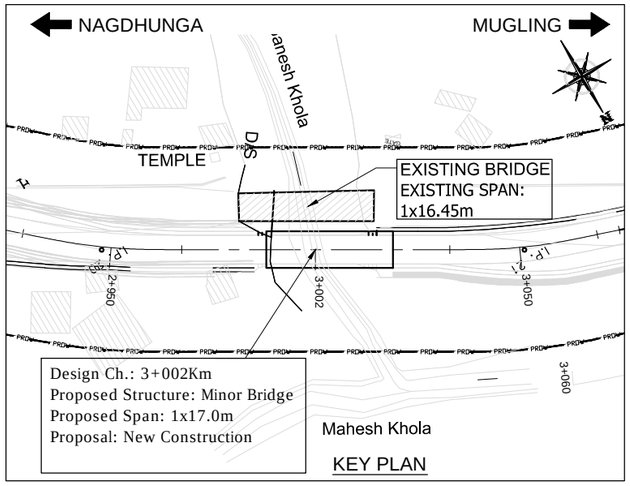

KEY PLAN

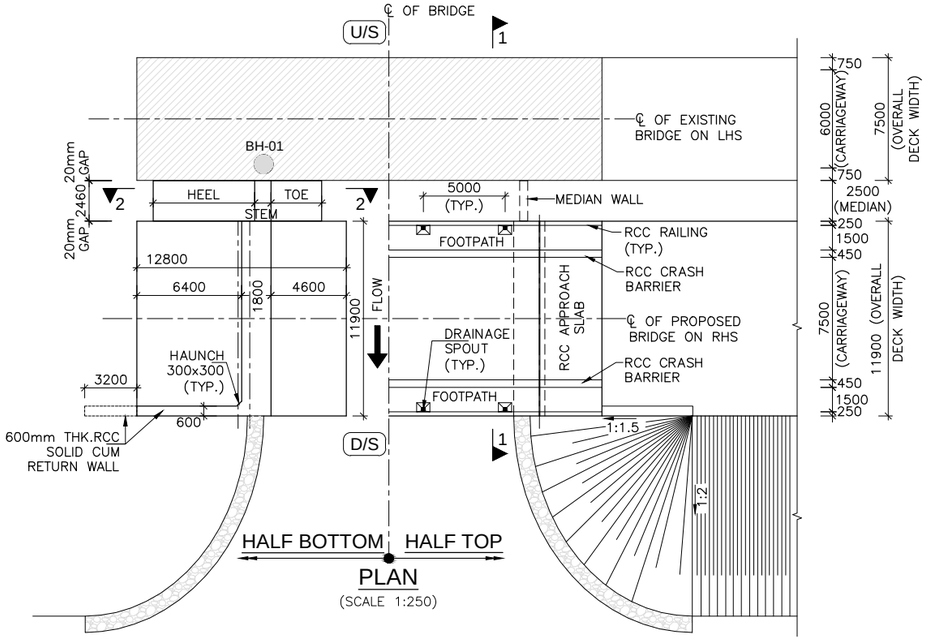

PLAN

(SCALE 1:250)

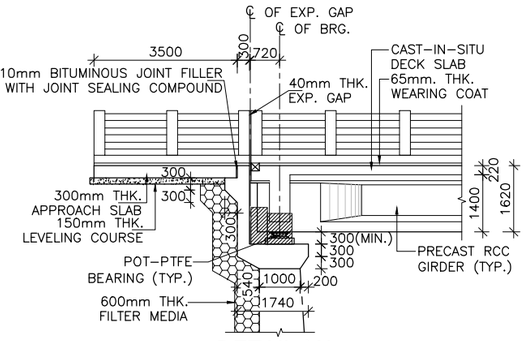

DETAIL-`A'

(SCALE 1:100)

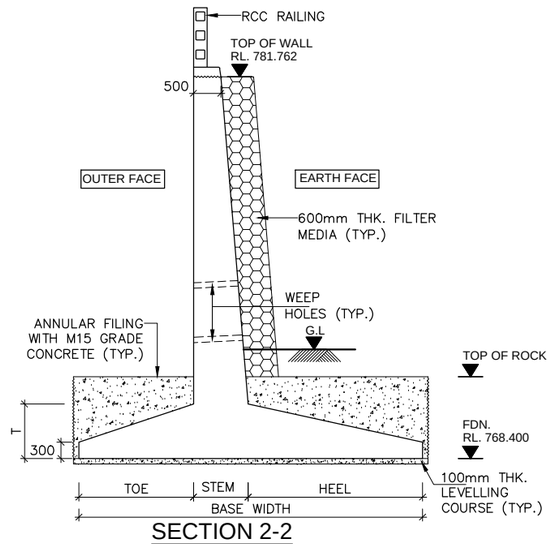

SECTION 2-2

(REFER SEPARATE DRAWING FOR DETAILS)

(SCALE 1:75)

LEGEND:

F.R.L	:	FINISHED ROAD LEVEL
H.F.L	:	HIGH FLOOD LEVEL
℄	:	CENTER LINE
LVL.	:	LEVEL
RL.	:	REDUCED LEVEL
TYP.	:	TYPICAL
THK.	:	THICK
D/S	:	DOWNSTREAM
U/S	:	UPSTREAM
G.L	:	GROUND LEVEL
L.B.L	:	LOWEST BED LEVEL
FDN.	:	FOUNDING LEVEL
FX	:	FIX
FR	:	FREE
EXISTING	:	
PROPOSED	:	
BH	:	BORE HOLE

HYDRAULIC DATA:-

DISCHARGE	– 57.0 cumec
VELOCITY	– 5.74m/s
H.F.L	– 772.359m
ROCK TOP LEVEL	– 773.200m

EMPLOYER	PROJECT	DESIGN CONSULTANT				
Government of Nepal Ministry of Physical Infrastructure and Transport, Department of Roads, Foreign Co-operation Branch	Nepal India Regional Trade and Transport Project (NIRTTP) (IDA CREDIT No. 5273 - NEP) Detailed Design of Kathmandu (Nagdhunga) - Naubise - Mugling Road and Bridges	Intercontinental Consultants & Technocrats Pvt.Ltd, A-8, Green Park, New Delhi - 110016 Ph : 4086-3000, Fax 2685-5252 In Joint Venture With Soosung Engineering Co. Ltd., South Korea	In Association With Full Bright Consultancy (Pvt.) Ltd. 316,Baburam Acharya Sadak, Sinamangal, Kathmandu, GPO Box: 4970, Kathmandu, Nepal	Prepared By	Pardeep	PARDEEP
				Designed By		AGNIMITA DAS
				Checked By		P.K.KHAN
				Approved By		B.N.SINGH

DRAWING TITLE:
GENERAL ARRANGEMENT DRAWING FOR MINOR BRIDGE AT CH:- 3+002KM OVER GANESH KHOLA (1x17.00m) PACKAGE-II (NAUBISE-GALCHI)

Drawing No.: NIRTTP/NAG-MUG/ GANESH/GAD

Scale: As Shown

Date: JUNE-2018

(SHEET 1 OF 2)

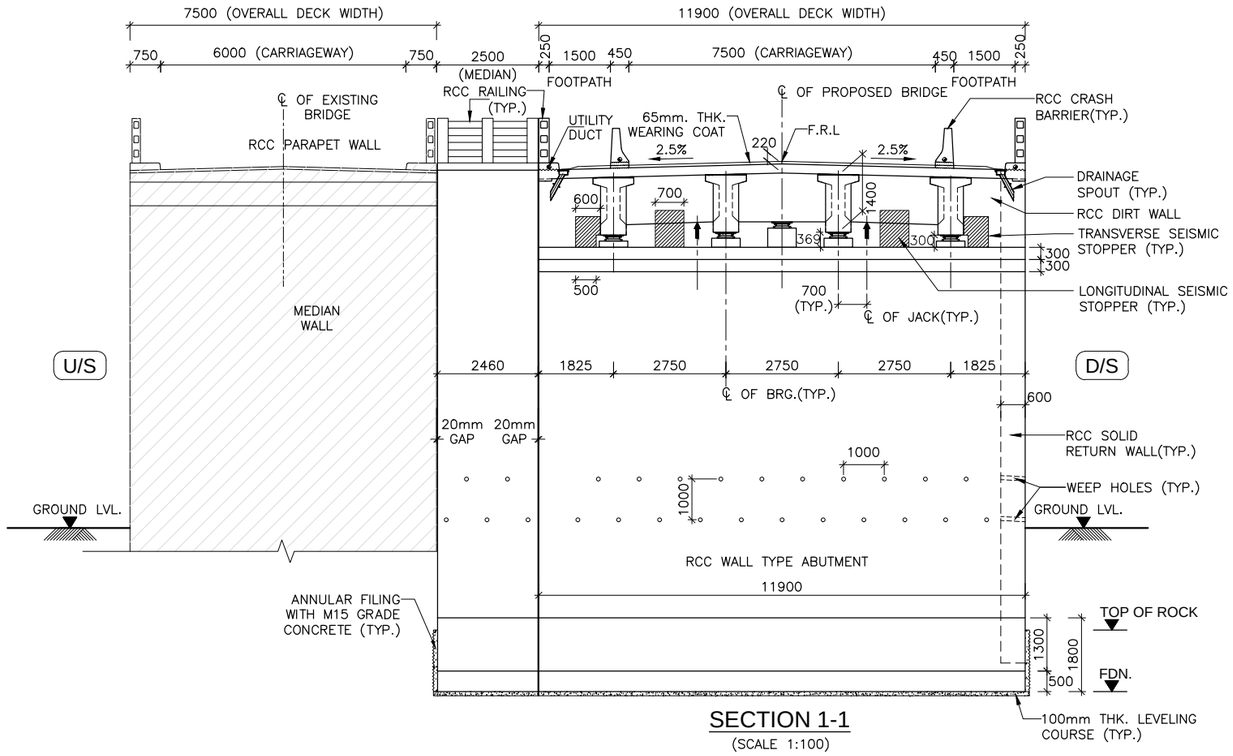

SECTION 1-1

(SCALE 1:100)

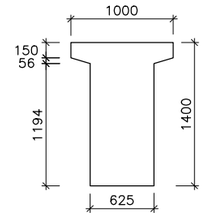

AT SUPPORT

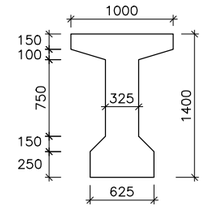

AT MID SPAN

CROSS SECTION OF PRECAST RCC GIRDER

(SCALE 1:40)

NOTES:-

1. ALL DIMENSIONS ARE IN MILLIMETER AND LEVELS ARE IN METER UNLESS OTHERWISE SPECIFIED.
2. DIMENSIONS ARE NOT TO BE SCALED ONLY WRITTEN DIMENSIONS SHALL BE FOLLOWED.
3. THE BRIDGE HAS BEEN DESIGNED FOR MOST SEVERE OF:
   (i) ONE LANE OF IRC CLASS 70R LOADING OR TWO LANES OF IRC CLASS A LOADING WHEN FOOTPATHS ARE IN POSITION.
   (ii) ONE LANE OF IRC CLASS 70R LOADING +ONE LANE OF IRC CLASS A LOADING OR 3 LANES OF IRC CLASS A LOADING WHEN FOOTPATHS ARE REMOVED.
   (iii) ONE LANE OF SV LOADING IN ACCORDANCE WITH CLAUSE 204.5 OF IRC–6:2017.
4. MINIMUM CONCRETE COVER, GRADE OF CONCRETE, MINIMUM CEMENT CONTENT & MAXIMUM W/C RATIO SHALL BE AS PER 'MODERATE' CONDITION OF EXPOSURE.
5. CONCRETE SHALL BE DESIGN MIX WITH A MINIMUM 28 DAYS CHARACTERISTIC STRENGTH ON 150mm CUBE AS FOLLOWS:
   a. LEVELING COURSE (UNDER FOUNDATION) – M10
   b. LEVELING COURSE (UNDER APPROACH SLAB) – M15
   c. FOUNDATION – M30
   d. PEDESTAL – M40
   e. SEISMIC STOPPER – M40
   f. SUBSTRUCTURE – M30
   g. SUPERSTRUCTURE – M35
   h. RETURN/RETAINING WALL – M30
   j. CRASH BARRIER – M40
   k. APPROACH SLAB – M30
6. UNTENSIONED REINFORCEMENT SHALL BE THERMO MECHANICALLY TREATED (TMT), HYSD BARS OF GRADE DESIGNATION Fe–500D CONFORMING TO IS: 1786.
7. POT/PTFE BEARINGS SHALL BE DESIGNED AS PER PROVISION OF IRC : 83 (PART–III 2002).
8. STRIP SEAL TYPE EXPANSION JOINTS SHALL BE PROVIDED AS PER PROVISION OF IRC: SP–69–2011.
9. 65MM THICK WEARING COURSE COMPRISING OF 40MM THICK ASPHALTIC CONCRETE OVERLAID WITH 25MM THICK MASTIC ASPHALT SHALL BE PROVIDED AS PER SECTION 500 OF MORT&H SPECIFICATION.
10. 100MM DIA WEEP HOLES AT 1000MM C/C STAGGERED HORIZONTALLY AND VERTICALLY SHALL BE PROVIDED IN ONE OR TWO LAYERS ABOVE G.L IN VERTICAL WALLS OF ABUTMENT, RETURN/RETAINING WALLS AT A SLOPE OF 1 VERTICAL TO 20 HORIZONTAL TOWARDS THE DRAINING FACE.
11. WATER TO BE USED IN CONCRETING AND CURING SHALL CONFORM TO CLAUSE 18.4.5 OF IRC:112–2011.
12. LAYING, COMPACTION AND EXTENT OF BACKFILL BEHIND ABUTMENTS AND RETURN/RETAINING WALLS SHALL CONSIST OF SELECTED EARTH CONFORMING TO APPENDIX:6 OF IRC:78–2014 HAVING PROPERTIES C=0, ϕ= 35°, δ=22.5° & γd = 20 KN/M^3.
13. MINIMUM CLEAR COVER TO OUTER MOST REINFORCEMENT SHALL BE AS UNDER:–
   a. SUPERSTRUCTURE – 40MM
   b. SUBSTRUCTURE (EARTH FACE) – 75MM
   c. SUBSTRUCTURE (NON EARTH FACE) – 50MM
   d. FOUNDATION – 75MM
14. THE BRIDGE IS DESIGNED FOR PROVISION OF SEISMIC ZONE–V AS PER CLAUSE 219 OF IRC:6:2017.
15. SAFE BEARING CAPACITY CONSIDERED IN DESIGN AT PROPOSED FOUNDING LEVEL IS 50 T/M^2. THIS SHALL BE ASCERTAINED BEFORE EXECUTION AT SITE BY CONFIRMATORY GEOTECHNICAL INVESTIGATIONS.
16. FILTER MEDIA SHALL BE PROVIDED AS PER APPENDIX–6 OF IRC–78:2014.
17. MINIMUM ANCHORAGE OF FOUNDATION IN SOFT ROCK SHALL BE 1.5M AND 0.6M IN HARD ROCK. ANY DEVIATION IN ROCK LEVEL FROM DESIGN SHALL BE REPORTED TO ENGINEER FOR REQUIRED CHANGES IN DESIGN NO CHANGES REQUIRED FOR INCREASE HEIGHT UP TO 50 CM.
18. WHERE FOUNDATIONS ARE PLACED ON ROCK, TRENCHES AROUND THE FOOTING SHALL BE FILLED UP WITH CONCRETE OF M15 GRADE UP TO TOP OF ROCK.
19. THIS DRAWING SHOULD BE READ IN CONJUNCTION WITH RELEVANT HIGHWAY PLAN AND PROFILE DRAWINGS.
20. ALL CHAINAGES, FRL, GL SHALL BE CONFIRMED AT SITE PRIOR TO EXECUTION.
21. FOR APPROACH SLAB, DRAINAGE SPOUTS, CRASH BARRIER, PROTECTION WORK, RETAINING WALL AND MEDIAN WALL DETAILS REFER SEPARATE DRAWINGS.
22. WHEREVER THE COMPONENTS OF EXISTING BRIDGE INTERFERES WITH THE PROPOSED BRIDGE, THAT SHALL BE DISMANTLED UPTO FOUNDATION TOP.
23. MINIMUM LONGITUDINAL GRADIENT OF 0.3% SHALL BE PROVIDED IN PROPOSED BRIDGE TO FACILITATE DRAINAGE OF DECK AS PER CLAUSE 105.3.6 OF IRC–5.
24. SIZE OF EACH INDIVIDUAL STONE PITCHING AND LAUNCHING APRON SHALL NOT BE LESS THAN 30CM IN DIAMETER AND 40KG IN WEIGHT OR AS PER TABLE 5.1 & 5.2 OF IRC:89–1997. WHERE THE REQUIRED SIZE STONES ARE NOT ECONOMICALLY AVAILABLE, STONES IN WIRE CRATES MAY BE USED IN PLACE OF ISOLATED STONES OF EQUIVALENT WEIGHT.

FACE OF OLD ABUTMENT SHALL BE MATCHED WITH PROPOSED BRIDGE ABUTMENT. IN CASE OF BIGGER SPAN IN PROPOSED SPAN, MEDIAN WALL SHALL BE PROVIDED IN FLARED SHAPE TO ALLOW SMOOTH PASSAGE OF RIVER WATER.

ABUTMENT CAP SHALL BE CAST ONLY AFTER COMPLETING THE BACK FILLING WORK UP TO ABUTMENT SHAFT TOP LEVEL.

LEGEND:

F.R.L	:	FINISHED ROAD LEVEL
H.F.L	:	HIGH FLOOD LEVEL
℄	:	CENTER LINE
LVL.	:	LEVEL
RL.	:	REDUCED LEVEL
TYP.	:	TYPICAL
THK.	:	THICK
D/S	:	DOWNSTREAM
U/S	:	UPSTREAM
G.L	:	GROUND LEVEL
L.B.L	:	LOWEST BED LEVEL
FDN.	:	FOUNDING LEVEL
FX	:	FIX
FR	:	FREE
EXISTING	:	
PROPOSED	:	
BH	:	BORE HOLE

REFERENCE DRAWINGS:-

1. DIMENSIONAL DETAILS OF ABUTMENT AND FOUNDATION:
   –NIRTTP/NAG–MUG/GANESH/SUB–01
2. REINFORCEMENT DETAILS OF ABUTMENT, DIRT WALL, RETURN WALL, PEDESTAL AND SEISMIC STOPPER:
   –NIRTTP/NAG–MUG/GANESH/SUB–02(SHEET1&2)
3. DIMENSIONAL DETAILS OF PRECAST RCC GIRDER & CAST–IN–SITU SLAB SUPERSTRUCTURE:
   –NIRTTP/NAG–MUG/GANESH/RCC–G/17m/01
4. REINFORCEMENT DETAILS OF LONGITUDINAL GIRDER:
   –NIRTTP/NAG–MUG/GANESH/RCC–G/17m/02
5. REINFORCEMENT DETAILS OF END CROSS GIRDER:
   –NIRTTP/NAG–MUG/GANESH/RCC–G/17m/03
6. REINFORCEMENT DETAILS OF RCC DECK SLAB:
   –NIRTTP/NAG–MUG/GANESH/RCC–G/17m/04(SHEET 1&2)
7. DETAILS OF LOAD AND FORCES FOR POT/PTFE BEARINGS:
   –NIRTTP/NAG–MUG/GANESH/RCC–G/17m/05

MISCELLANEOUS DRAWINGS:

1. DETAILS OF APPROACH SLAB:
   –NIRTTP/NAG–MUG/PACKAGE–II/MISC.–01
2. DETAILS OF DRAINAGE SPOUT & WEARING COAT:
   –NIRTTP/NAG–MUG/PACKAGE–II/MISC.–02
3. DIMENSIONAL & REINF. DETAILS OF R.C.C CRASH BARRIER:
   –NIRTTP/NAG–MUG/PACKAGE–II/MISC.–03
4. DIMENSIONAL & REINF. DETAILS OF R.C.C RAILING:
   –NIRTTP/NAG–MUG/PACKAGE–II/MISC.–04
5. DIMENSIONAL AND REINFORCEMENT DETAILS OF RCC RETAINING WALL/MEDIAN WALL:
   –NIRTTP/NAG–MUG/PACKAGE–II/MISC.–06

EMPLOYER	PROJECT	DESIGN CONSULTANT				
Government of Nepal Ministry of Physical Infrastructure and Transport, Department of Roads, Foreign Co-operation Branch	Nepal India Regional Trade and Transport Project (NIRTTP) (IDA CREDIT No. 5273 - NEP) Detailed Design of Kathmandu (Nagdhunga) - Naubise - Mugling Road and Bridges	Intercontinental Consultants & Technocrats Pvt.Ltd, A-8, Green Park, New Delhi - 110016 Ph : 4086-3000, Fax 2685-5252 In Joint Venture With Soosung Engineering Co. Ltd., South Korea	In Association With Full Bright Consultancy (Pvt.) Ltd. 316,Baburam Acharya Sadak, Sinamangal, Kathmandu, GPO Box: 4970, Kathmandu, Nepal	Prepared By	PARDEEP	DRAWING TITLE: GENERAL ARRANGEMENT DRAWING FOR MINOR BRIDGE AT CH:- 3+002KM OVER GANESH KHOLA (1x17.00m) PACKAGE-II (NAUBISE-GALCHI)
				Designed By	AGNIMITA DAS	
				Checked By	P.K.KHAN	Drawing No.: NIRTTP/NAG-MUG/ GANESH/GAD
				Approved By	B.N.SINGH	

Scale: As Shown

Date: JUNE-2018

(SHEET 2 OF 2)

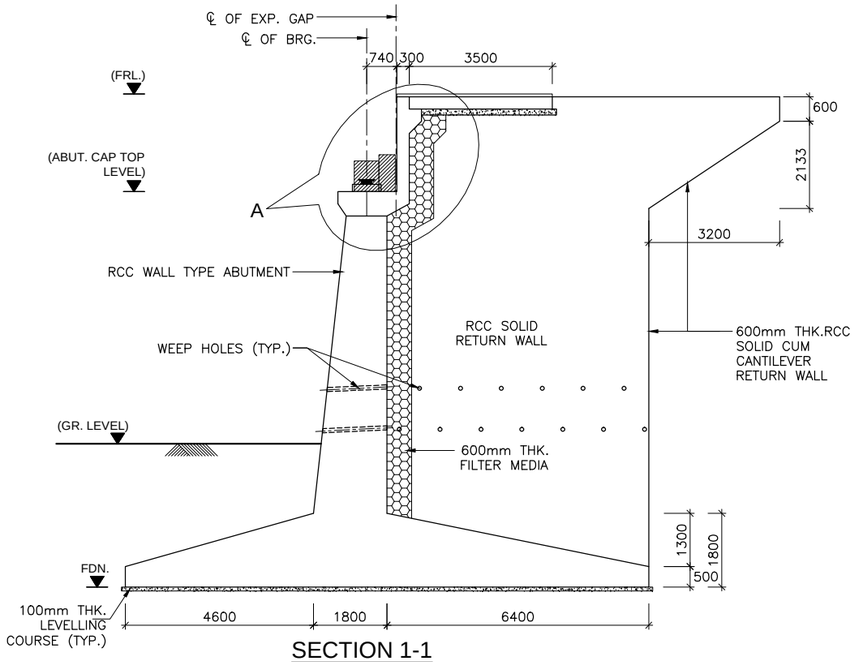

SECTION 1-1
(SCALE 1:100)

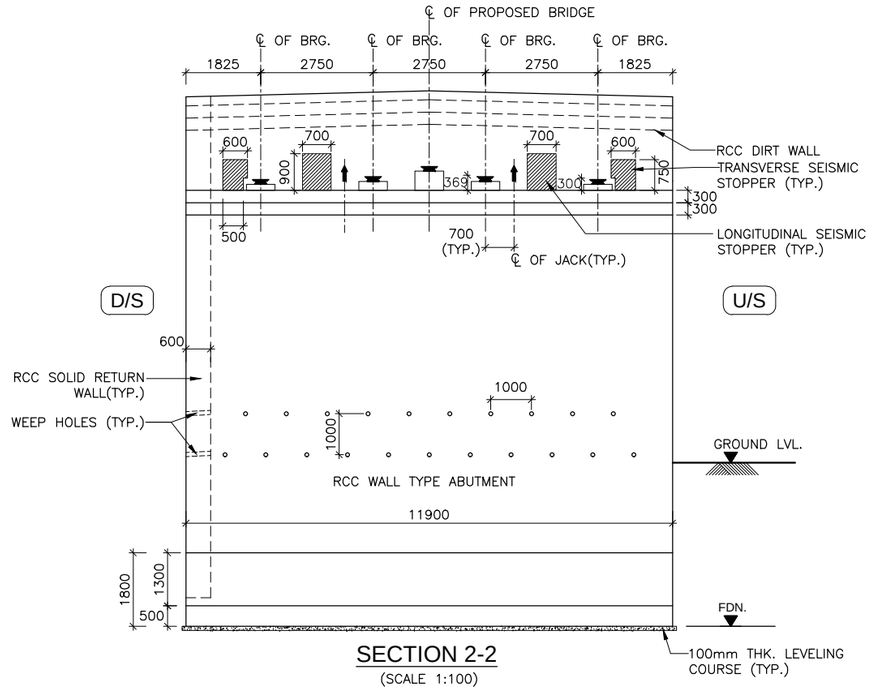

SECTION 2-2
(SCALE 1:100)

NOTES :-

1. ALL DIMENSIONS ARE IN MM, UNLESS OTHERWISE MENTIONED.
2. ONLY WRITTEN DIMENSIONS ARE TO BE FOLLOWED AND NO DIMENSION SHALL BE SCALED.
3. CONCRETE SHALL BE DESIGN MIX WITH A MINIMUM 28 DAYS CHARACTERISTIC STRENGTH ON 150mm CUBE AS FOLLOWS:
   a. LEVELING COURSE (UNDER FOUNDATION) – 10MPa
   b. LEVELING COURSE (UNDER APPROACH SLAB) – 15MPa
   c. FOUNDATION – 30MPa
   d. SUBSTRUCTURE – 30MPa
   e. APPROACH SLAB – 30MPa
   f. PEDESTAL – 40MPa
   g. SEISMIC STOPPER – 40MPa
4. UNTENSIONED REINFORCEMENT SHALL BE THERMO MECHANICALLY TREATED (TMT), HYSD BARS OF GRADE DESIGNATION Fe–500D CONFORMING TO IS: 1786.
5. MINIMUM CLEAR COVER TO OUTER MOST REINFORCEMENT SHALL BE AS UNDER
   a. SUBSTRUCTURE (EARTH FACE) – 75MM
   b. SUBSTRUCTURE (NON EARTH FACE) – 50MM
   c. FOUNDATION – 75MM
6. LL REPRESENTS LONGITUDINAL AXIS OF BRIDGE AND TT REPRESENTS TRANSVERSE AXIS OF ABUTMENT/FOUNDATION.
7. SAFE BEARING CAPACITY AT THE PROPOSED FOUNDING LEVEL HAS BEEN CONSIDERED AS 50 T/M² ON THE BASIS OF SUB SURFACE EXPLORATION RESULTS. THIS SHALL GOT CONFIRMED BEFORE EXECUTION.
8. THE LOCATION OF JACKS FOR LIFTING UP THE SUPERSTRUCTURE SHALL BE DISTINCTLY ETCHED ON SOFFIT OF SUPERSTRUCTURE AND ON TOP OF ABUTMENT CAP.
9. THIS DRAWING SHALL BE READ IN CONJUNCTION WITH THE FOLLOWING DRGS.
   - GENERAL ARRANGEMENT DRAWING REFER:
     –NIRTTP/NAG–MUG/GANESH/GAD
   - REINFORCEMENT DETAILS OF ABUTMENT, DIRT WALL, RETURN WALL, PEDESTAL AND SEISMIC STOPPER REFER:
     –NIRTTP/NAG–MUG/GANESH/SUB–02(SHEET1&2)

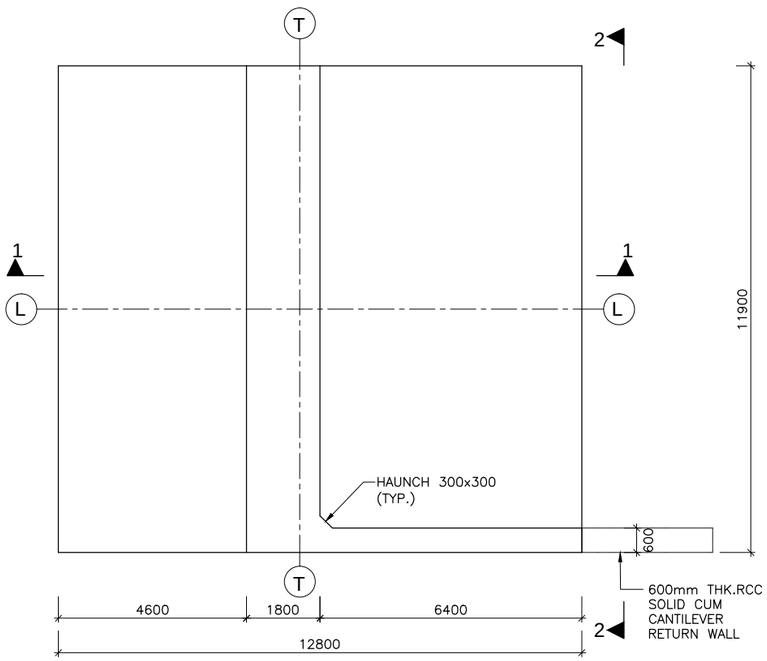

PLAN AT FOUNDATION LEVEL
(SCALE 1:100)

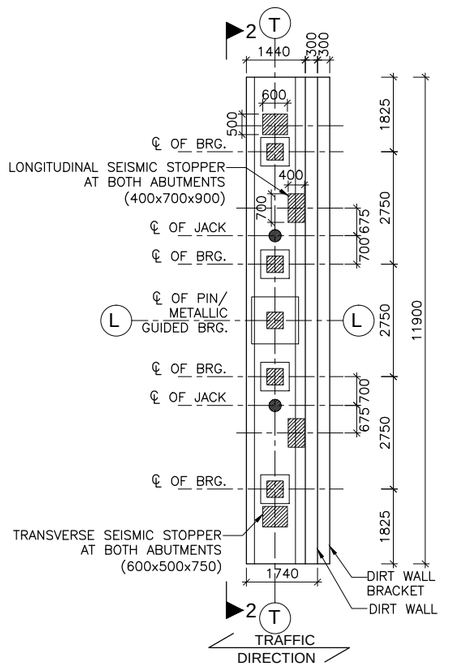

PLAN AT ABUTMENT CAP LEVEL
(SCALE 1:100)

LEGEND:-

- ▨ – BEARING LOCATION IN PLAN
- ● – JACK LOCATION IN PLAN
- ↑ – JACK LOCATION IN ELEVATION

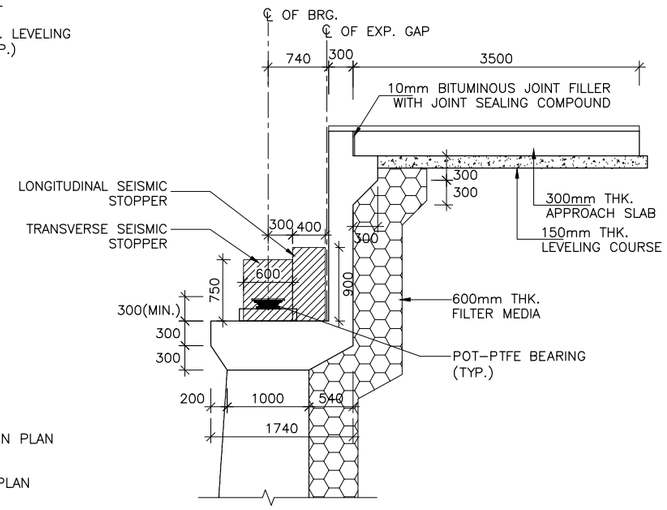

DETAIL-`A'
(SCALE 1:50)

LEVEL SCHEDULE

MARK	FRL (m)	ABUTMENT CAP TOP LVL. (m)	GR. LEVEL (m)	FDN. LEVEL (m)
ABUTMENT A1	781.911	779.810	777.093	768.400
ABUTMENT A2	781.911	779.810	777.437	768.400

EMPLOYER	PROJECT	DESIGN CONSULTANT					
Government of Nepal Ministry of Physical Infrastructure and Transport, Department of Roads, Foreign Co-operation Branch	Nepal India Regional Trade and Transport Project (NIRTTP) (IDA CREDIT No. 5273 - NEP) Detailed Design of Kathmandu (Nagdhunga) - Naubise - Mugling Road and Bridges	Intercontinental Consultants & Technocrats Pvt.Ltd, A-8, Green Park, New Delhi - 110016 Ph : 4086-3000, Fax 2685-5252 In Joint Venture With Soosung Engineering Co. Ltd., South Korea	In Association With Full Bright Consultancy (Pvt.) Ltd. 316,Baburam Acharya Sadak, Sinamangal, Kathmandu, GPO Box: 4970, Kathmandu, Nepal	Prepared By		PARDEEP	DRAWING TITLE: DIMENSIONAL DETAILS OF ABUTMENT AND FOUNDATION OF MINOR BRIDGE AT CH:- 3+002KM OVER GANESH KHOLA PACKAGE-II (NAUBISE-GALCHI)	Scale:	Date: JUNE-2018
				Designed By		AGNIMITA DAS		As Shown	
				Checked By		P.K.KHAN			
				Approved By		B.N.SINGH	Drawing No.: NIRTTP/NAG-MUG/GANESH/SUB-01		

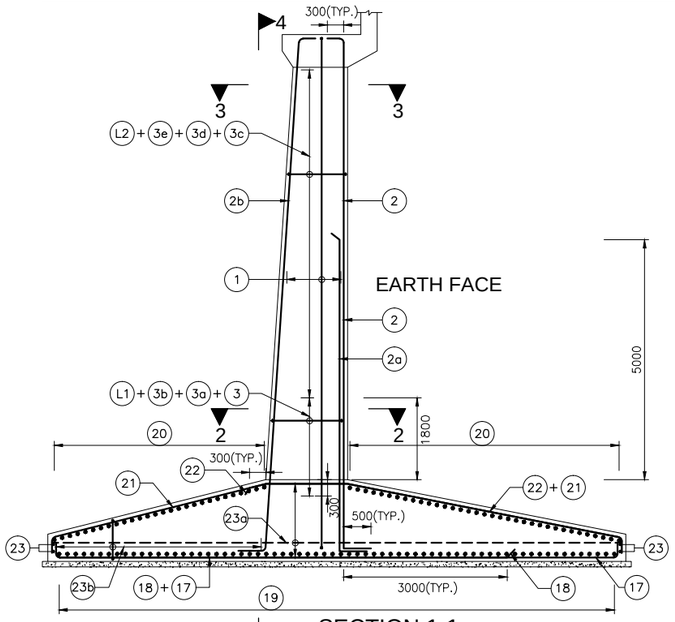

SECTION 1-1
(SCALE 1:75)

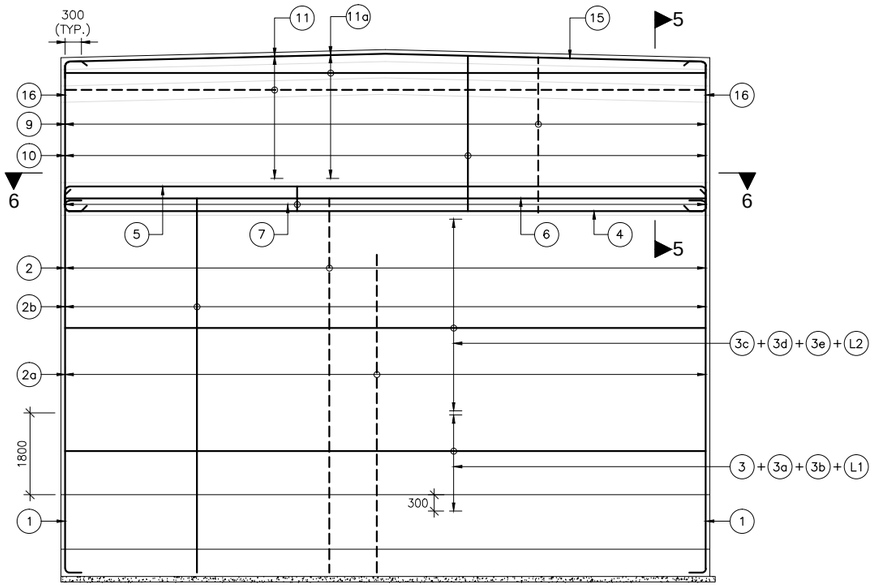

SECTION 4-4
(SCALE 1:75)
(FOUNDATION REINFORCEMENT & CORBEL REINFORCEMENT NOT SHOWN FOR CLARITY)

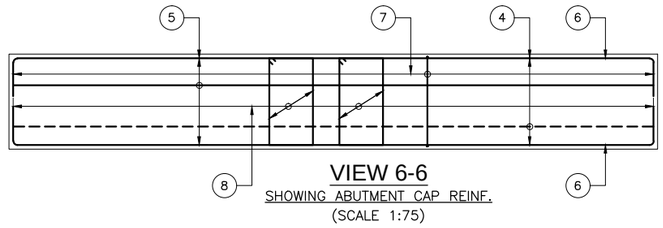

VIEW 6-6
SHOWING ABUTMENT CAP REINF.
(SCALE 1:75)

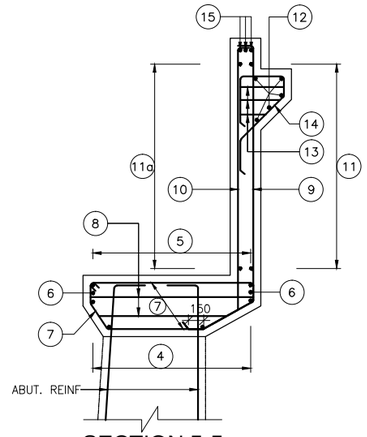

SECTION 5-5
(SCALE 1:40)

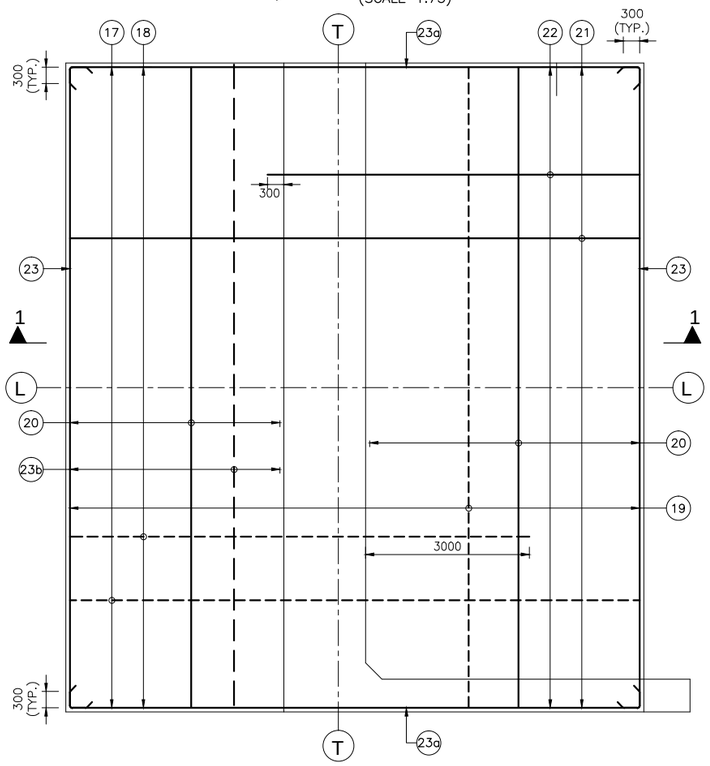

FOUNDATION PLAN
(SCALE 1:75)

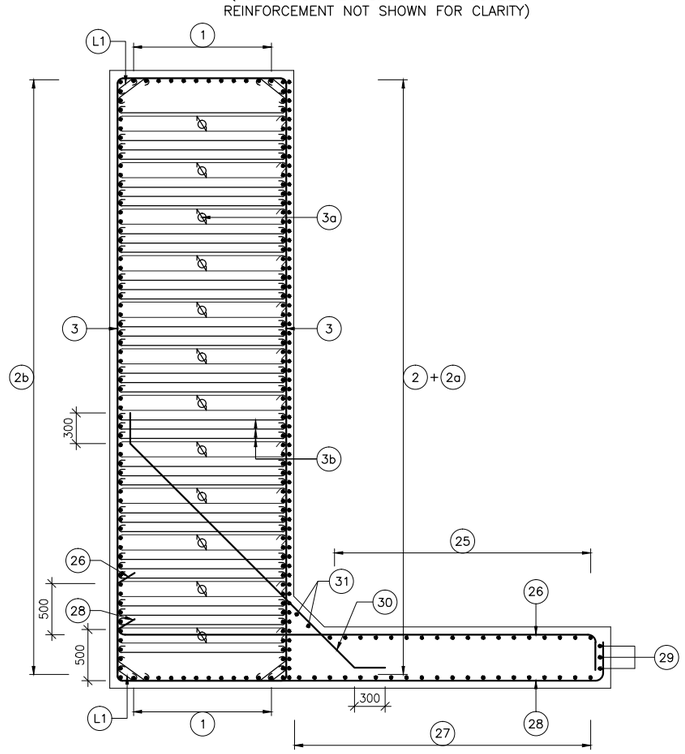

SECTION 2-2
(SCALE 1:40)

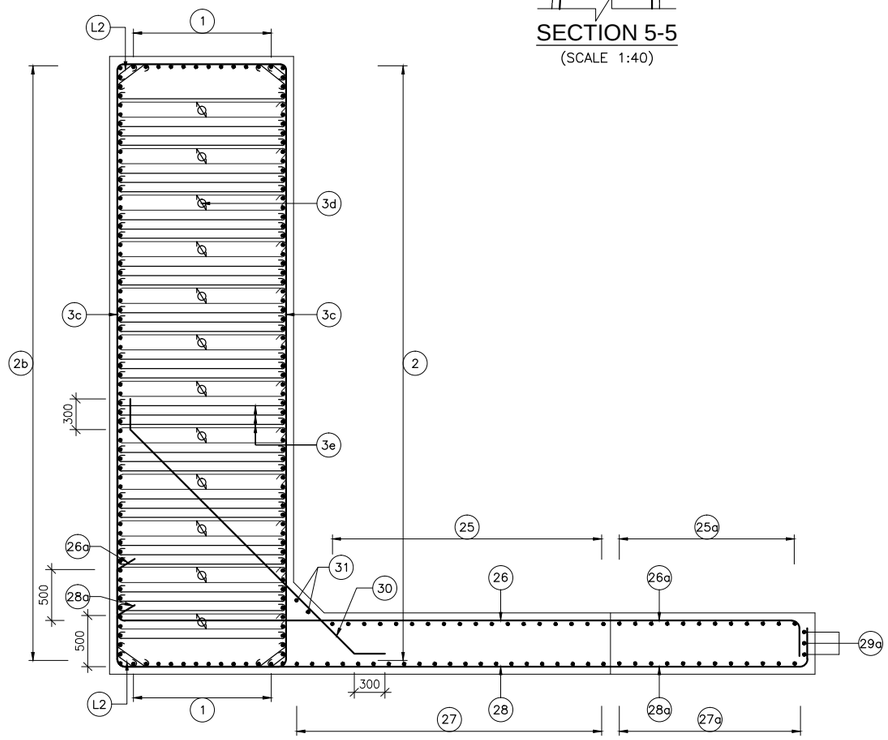

SECTION 3-3
(SCALE 1:40)

EMPLOYER	PROJECT	DESIGN CONSULTANT					
Government of Nepal Ministry of Physical Infrastructure and Transport, Department of Roads, Foreign Co-operation Branch	Nepal India Regional Trade and Transport Project (NIRTTP) (IDA CREDIT No. 5273 - NEP) Detailed Design of Kathmandu (Nagdhunga) - Naubise - Mugling Road and Bridges	Intercontinental Consultants & Technocrats Pvt.Ltd, A-8, Green Park, New Delhi - 110016 Ph : 4086-3000, Fax 2685-5252 In Joint Venture With Soosung Engineering Co. Ltd., South Korea	In Association With Full Bright Consultancy (Pvt.) Ltd. 316,Baburam Acharya Sadak, Sinamangal, Kathmandu, GPO Box: 4970, Kathmandu, Nepal	Prepared By	Pardeep	PARDEEP	DRAWING TITLE: REINFORCEMENT DETAILS OF ABUTMENT, DIRT WALL, RETURN WALL, PEDESTAL AND SEISMIC STOPPER FOR MINOR BRIDGE AT CH:- 3+002KM OVER GANESH KHOLA PACKAGE-II (NAUBISE-GALCHI)	Scale:	Date: JUNE-2018
				Designed By		AGNIMITA DAS		As Shown	
				Checked By	P.Khan	P.K.KHAN			(SHEET 1 OF 2)
				Approved By		B.N.SINGH	Drawing No.: NIRTTP/NAG-MUG/GANESH /SUB-02		

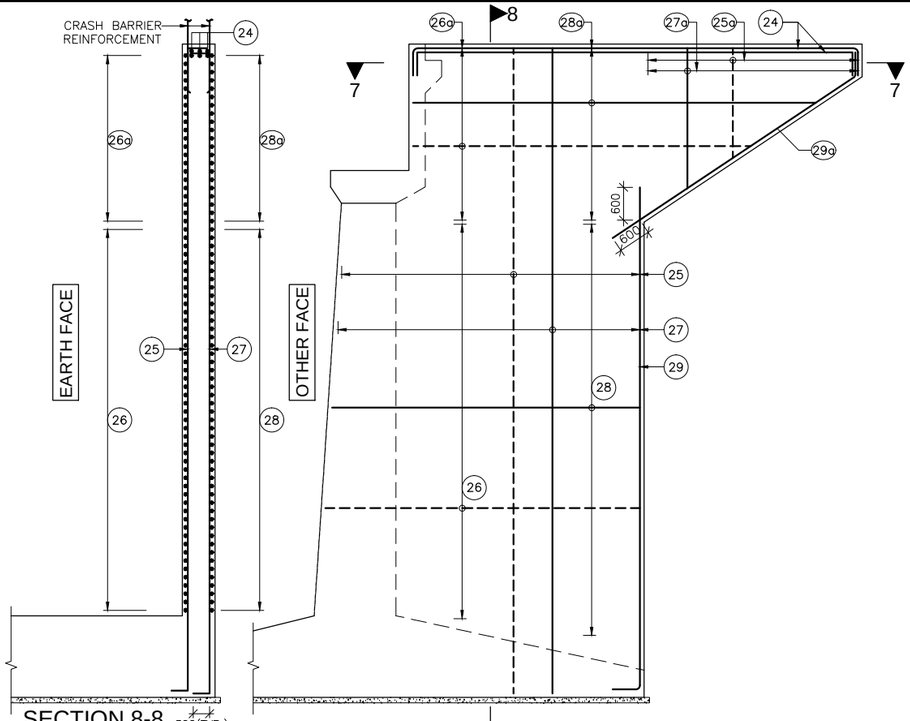

SECTION 8-8
(SCALE 1:75)

REINF. DETAILS OF RETURN WALL
(SCALE 1:75)

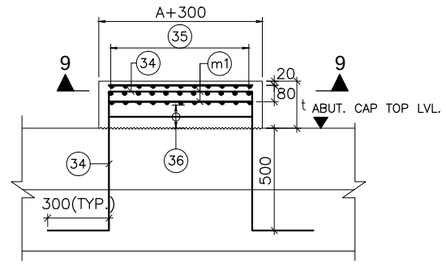

REINF. DETAILS OF PEDESTAL
(SCALE 1:20)
WHERE, A SIZE OF BEARING AND t IS HEIGHT OF PEDESTAL

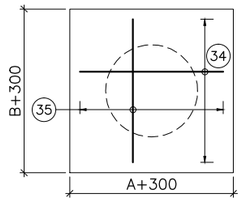

SECTION 9-9
(SCALE 1:20)
WHERE, A&B SIZE OF BEARING

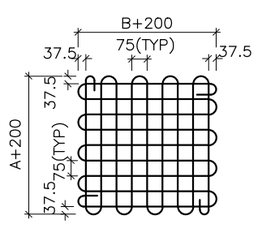

DETAIL OF MESH
TYPE "M1" 8 ϕ
(IN PEDESTAL) (IN TWO LAYERS)
(SCALE 1:20)
(WHERE A & B SIZE OF BEARING)

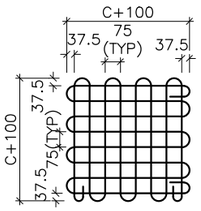

DETAIL OF MESH
TYPE "M2" 8 ϕ
(UNDER JACK LOCATION)
(IN TWO LAYERS)
(SCALE 1:20)
(WHERE C= DIA OF JACK)

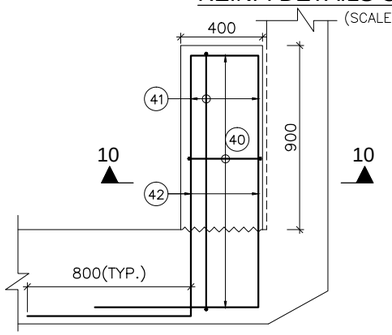

REINF. DETAILS OF LONGITUDINAL SEISMICSTOPPER
(SCALE 1:20)

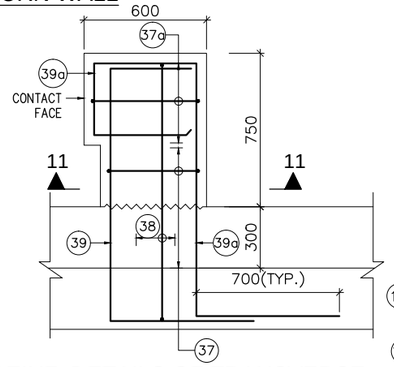

REINF. DETAILS OF TRANSVERSE SEISMIC STOPPER
(SCALE 1:20)

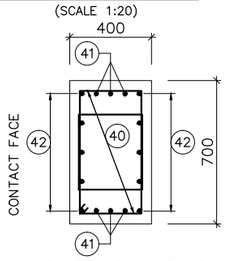

SECTION 10-10
(SCALE 1:20)
WHERE, A/B SIZE OF BEARING

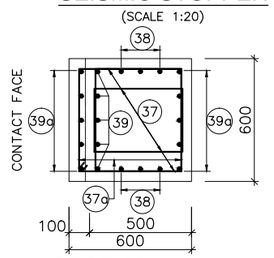

SECTION 11-11
(SCALE 1:20)

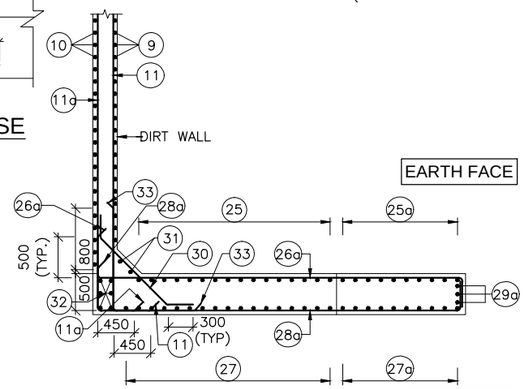

SECTION 7-7
JUNCTION DETAILS OF R.C.C. RETURN WALL & DIRT WALL
(SCALE 1:50)

10	10 ϕ @ 125 c/c	150 150		DIRT WALL AND BRACKET
11	10 ϕ @ 100 c/c	150 150		
11a	10 ϕ @ 100 c/c	150 450		
12	12 ϕ –5 NOS.			
13	2L–12ϕ@ 100c/c	400 200	(3 LAYERS)	
14	12 ϕ @ 100 c/c	400 300 300		
15	20 ϕ –3 NOS.		(2 LAYERS)	
16	12 ϕ –3 NOS.	300 300		
17	32 ϕ @ 180 c/c	100 100		FOUNDATION
18	32 ϕ @ 180 c/c	100		
19	16 ϕ @ 100 c/c	LV. LV.		
20	16 ϕ @ 100 c/c	LV. LV.		
21	16 ϕ @ 180 c/c	100 100		
22	20 ϕ @ 180 c/c	100		
23	12 ϕ –2 Nos	300 300		
23a	12 ϕ @ 200 c/c	300 300		
23b	22L–10ϕ@ 150c/c	360 400 360	STIRRUPS	
24	25 ϕ –3 Nos.	500 500	IN 2 LAYERS	RETURN WALL
25	25 ϕ @100c/c	300 300		
25a	20 ϕ @100c/c	300 300		
26	20 ϕ @ 100c/c	300 800		
26a	20 ϕ @ 100c/c	300 800		
27	12 ϕ @100c/c	300 300		
27a	12 ϕ @100c/c	300 300		
28	10 ϕ @ 100c/c	300 500		
28a	10 ϕ @ 100c/c	300 500		
29	12 ϕ –3 Nos.	300		
29a	12 ϕ –3 Nos.			
30	12 ϕ @ 200c/c			
31	12 ϕ –2 Nos.			
32	16 ϕ –6 Nos.			
33	20 ϕ @ 100c/c	1000 1000		
34	12 ϕ @ 75c/c			RCC PEDESTAL
35	12 ϕ @ 75c/c			
36	2L–12ϕ@ 150c/c		STRPS.	
37	4L–12ϕ@ 150c/c		STRPS.	TRANSVERSE SEISMIC STOPPER
37a	2L–12ϕ@ 150c/c		STRPS.	
38	16 ϕ –3 Nos.		BOTH FACES	
39	32 ϕ –5 Nos.		BOTH FACES	
39a	25 ϕ –5 Nos.		BOTH FACES	
40	4L–12ϕ@ 200c/c		STRPS.	LONGITUDINAL SEISMIC STOPPER
41	16 ϕ –3 Nos.		BOTH FACES	
42	32 ϕ –5 Nos.		BOTH FACES	

NOTES :-

1. ALL DIMENSIONS ARE IN MM, UNLESS OTHERWISE MENTIONED.
2. ONLY WRITTEN DIMENSIONS ARE TO BE FOLLOWED AND NO DIMENSION SHALL BE SCALED.
3. CONCRETE SHALL BE DESIGN MIX WITH A MINIMUM 28 DAYS CHARACTERISTIC STRENGTH ON 150mm CUBE AS FOLLOWS:
   a. LEVELING COURSE (UNDER FOUNDATION) – 10MPa
   b. LEVELING COURSE (UNDER APPROACH SLAB) – 15MPa
   c. FOUNDATION – 30MPa
   d. SUBSTRUCTURE – 00MPa
   e. APPROACH SLAB – 30MPa
   f. PEDESTAL – 40MPa
   g. SEISMIC STOPPER – 40MPa
4. UNTENSIONED REINFORCEMENT SHALL BE THERMO MECHANICALLY TREATED (TMT), HYSD BARS OF GRADE DESIGNATION Fe–500D CONFORMING TO IS: 1786.
5. MINIMUM CLEAR COVER TO OUTER MOST REINFORCEMENT SHALL BE AS UNDER:–
   a. SUBSTRUCTURE (EARTH FACE) – 75MM
   b. SUBSTRUCTURE (NON EARTH FACE) – 50MM
   c. FOUNDATION – 75MM
6. LL REPRESENTS LONGITUDINAL AXIS OF BRIDGE AND TT REPRESENTS TRANSVERSE AXIS OF ABUTMENT/FOUNDATION.
7. MINIMUM ANCHORAGE LENGTH OF REINFORCEMENT FOR FAVOURABLE CONDITION SHALL BE AS UNDER:
   CONCRETE GRADE – M–30 – 40 x DIA OF BAR
   CONCRETE GRADE – M–40 – 34 x DIA OF BAR
   (WHERE DIA OF BAR < = 32MM.)
   FOR UNFAVOURABLE CONDITION THESE VALUES SHALL BE MULTIPLIED BY 1.43.
8. MINIMUM LAP LENGTH OF REINFORCEMENT FOR FAVOURABLE CONDITION SHALL BE AS UNDER:
   CONCRETE GRADE – M–30 – 56 x DIA OF BAR
   CONCRETE GRADE – M–40 – 48 x DIA OF BAR
9. THIS DRAWING SHALL BE READ IN CONJUNCTION WITH THE FOLLOWING DRGS.
   - GENERAL ARRANGEMENT DRAWING REFER DRG. NO. : NIRTTP/NAG–MUG/GANESH/GAD
   - DIMENSIONAL DETAILS OF ABUTMENT AND FOUNDATION REFER DRG. NO. : NIRTTP/NAG–MUG/GANESH/SUB–01

BAR SHAPE SCHEDULE

BAR MRKD.	DESCRIPTION	BAR SHAPE	REMARKS	
1	16 ϕ –12 NOS.	300 300	EACH FACE	ABUTMENT SHAFT
2	32 ϕ –80 NOS.	300 300	1st LAYER	
2a	32 –80 NOS.	300 300	2nd LAYER	
2b	25 ϕ –80 NOS.	300 300		
3	16 ϕ @ 100c/c			
3a	30L–8 ϕ @ 100c/c			
3b	42LINK8 ϕ @100 c/c			
3c	16ϕ @ 200c/c			
3d	30L–8 ϕ @ 200c/c			
3e	42LINK8 ϕ @200 c/c			
L1	8LINK8 ϕ @100 c/c			
L2	8LINK8 ϕ @200 c/c			
4	12 ϕ –10 NOS.	300 300		ABUTMENT CAP
5	12 ϕ –10 NOS.	500 500		
6	12 ϕ –1 NO.	300 300	EACH FACE	
7	2L–12ϕ@ 150c/c		STIRRUPS	
8	2L–12 ϕ @ 200c/c	300	IN 2 LAYERS	
9	16 ϕ @ 125 c/c	150		

LEGEND

- - - - - - - EARTH FACE/BOTTOM FACE
——————— NON EARTH FACE/TOP FACE

EMPLOYER	PROJECT	DESIGN CONSULTANT
Government of Nepal Ministry of Physical Infrastructure and Transport, Department of Roads, Foreign Co-operation Branch	Nepal India Regional Trade and Transport Project (NIRTTP) (IDA CREDIT No. 5273 - NEP) Detailed Design of Kathmandu (Nagdhunga) - Naubise - Mugling Road and Bridges	Intercontinental Consultants & Technocrats Pvt.Ltd, A-8, Green Park, New Delhi - 110016 Ph : 4086-3000, Fax 2685-5252 In Joint Venture With Soosung Engineering Co. Ltd., South Korea In Association With Full Bright Consultancy (Pvt.) Ltd. 316,Baburam Acharya Sadak, Sinamangal, Kathmandu, GPO Box: 4970, Kathmandu, Nepal

Prepared By	Pardeep	PARDEEP
Designed By		AGNIMITA DAS
Checked By	P.Khan	P.K.KHAN
Approved By		B.N.SINGH

DRAWING TITLE:
REINFORCEMENT DETAILS OF ABUTMENT, DIRT WALL, RETURN WALL, PEDESTAL AND SEISMIC STOPPER FOR MINOR BRIDGE AT CH:- 3+002KM OVER GANESH KHOLA
PACKAGE-II (NAUBISE-GALCHI)

Drawing No.: NIRTTP/NAG-MUG/GANESH /SUB-02

Scale: As Shown

Date: JUNE-2018

(SHEET 2 OF 2)

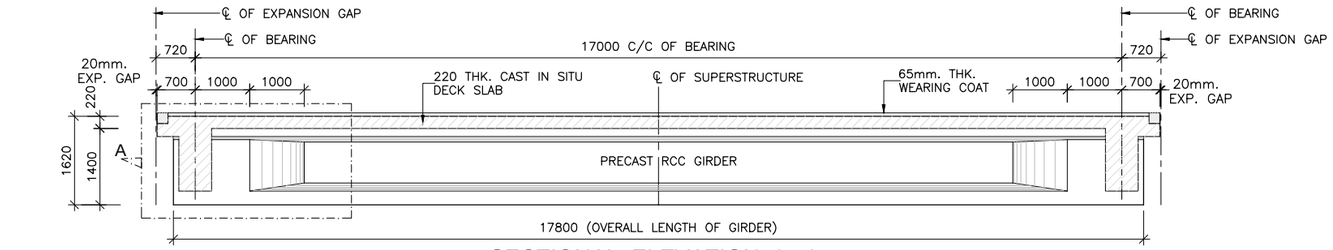

SECTIONAL ELEVATION 1 - 1

(SCALE 1:75)

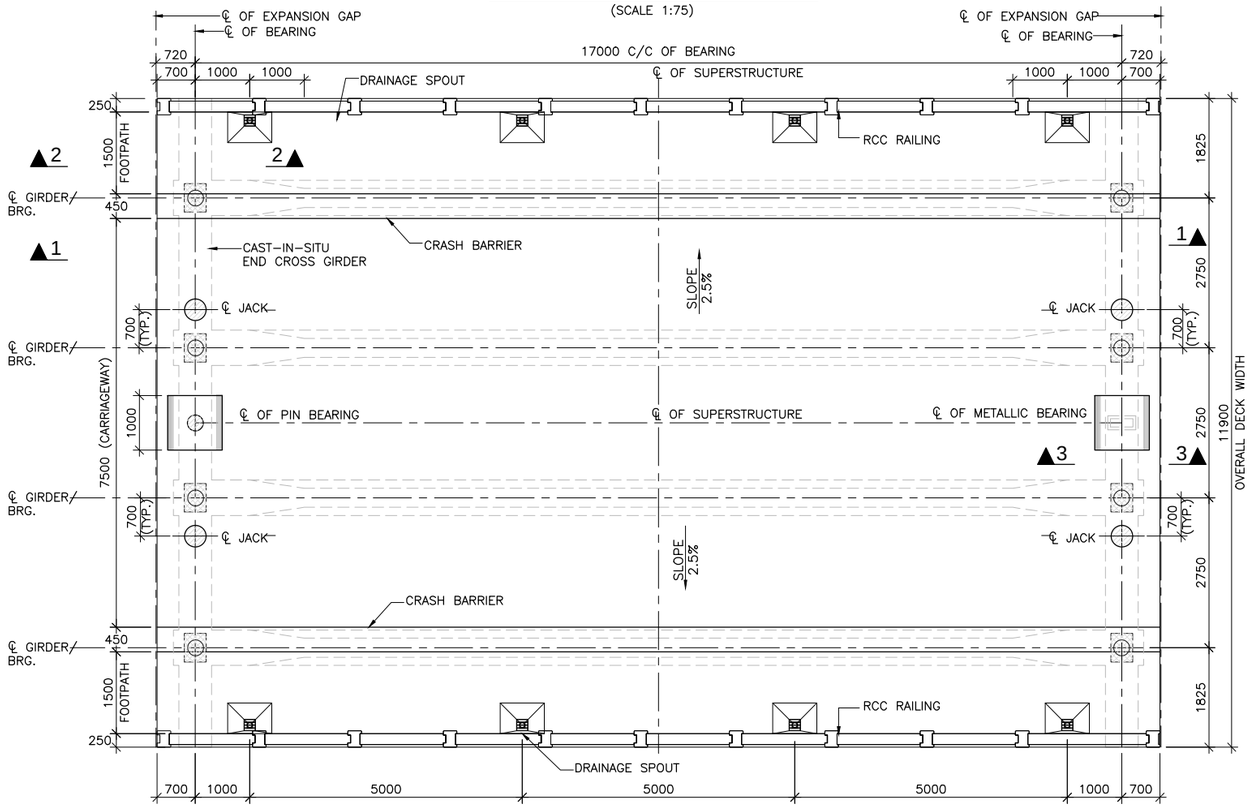

TOP PLAN OF DECK SLAB

(SCALE 1:75)

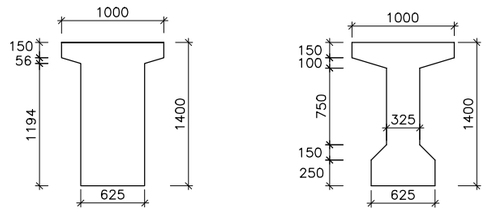

AT SUPPORT

AT MID SPAN

DETAILS OF PRECAST RCC GIRDER

(SCALE 1:40)

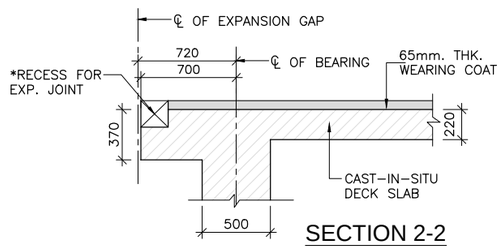

SECTION 2-2

(SCALE 1:30)

NOTES:-

1. ALL DIMENSIONS ARE IN mm UNLESS OTHERWISE MENTIONED. ONLY WRITTEN DIMENSIONS ARE TO BE FOLLOWED. NO DIMENSIONS SHALL BE SCALED.
2. (i) THE BRIDGE IS TO BE DESIGNED FOR ONE LANE OF IRC CLASS 70R OR 2 LANES OF IRC CLASS A LOADING WITH FOOTPATH WHICHEVER GOVERNS.
   (ii)THIS BRIDGE ALSO TO BE DESIGNED IRC CLASS SV LOADING: SPECIAL MULTI AXLE HYDRAULIC TRAILER VEHICLE (PRIME MOVER WITH 20 AXLE TRAILER–GVW=385 TONES)
3. CONCRETE SHALL BE DESIGN MIX WITH A MINIMUM 28 DAYS CHARACTERISTIC STRENGTH ON 150mm CUBES AS FOLLOWS :–
   PRECAST RCC GIRDER + RCC CAST IN SITU DECK SLAB–35 MPa
4. UNTENSIONED REINFORCEMENT SHALL BE THERMO MECHANICALLY TREATED (TMT), HYSD BARS OF GRADE DESIGNATION Fe–500D CONFORMING TO IS: 1786.
5. CLEAR COVER TO OUTER MOST STEEL SHALL BE AS UNDER:–
   FOR SUPER STRUCTURE–40mm.
6. 65mm. THK. WEARING COURSE COMPRISING OF 40mm THK. ASPHALTIC CONCRETE OVER LAID WITH 25mm THK. MASTIC ASPHALT SHALL BE PROVIDED AS PER SECTION 500 OF MORTH SPECIFICATIONS.
7. FOR LIFTING OF THE SUPERSTRUCTURE 2Nos. OF FREYSSINET JACKS OF CAPACITY **110t** EACH MAY BE REQUIRED AT EACH END. THE LOCATION OF JACKS FOR LIFTING OF THE SUPERSTRUCTURES TO REPLACE BEARINGS ETC. IS SHOWN ↑ THUS THIS SHALL BE DISTINCTLY ETCHED FOR EASY IDENTIFICATION ON THE ABUTMENT CAPS
8. DURING THE LIFTING OPERATION OF SUPERSTRUCTURE ALL THE JACKS PLACED UNDER THE END DIAPHRAGM IN LINE WITH THE BEARINGS SHALL BE OPERATED SIMULTANEOUSLY USING SINGLE OPERATING CONSOLE, GROUPING THE PUMP AND CONTROL SYSTEM SO AS TO ENSURE THAT THE REACTIONS ON ALL THE JACKS ARE EQUAL AT ALL TIMES.
9. PRECAST GIRDERS SHALL BE CAST IN ONE CONCRETING OPERATION IN CASTING YARD WITHOUT ANY CONSTRUCTION JOINT.
10. EACH PRECAST GIRDER WILL BE LIFTED BY USING LIFTING STRANDS AT EITHER END. DURING LIFTING, GIRDER SHALL BE KEPT PLUMB AND UPRIGHT SELF WEIGHT OF GIRDER IS **385kN.**

AGE OF GIRDER (IN DAYS)	ACTIVITY	STRENGTH OF CONC. (IN MPa)
0	CASTING OF LONGITUDINAL GIRDER AT CASTING YARD WITH PORTION OF DIAPHRAGM	–
14 to 28	POSITION OF LONGITUDINAL GIRDER ON TEMPORARY BRGS. AND HOLD THEM IN POSITION BY LATERAL BRACING. REINF. OF DECK SLAB & END DIAPHRAGM WILL BE FIXED IN POSITION	30
28	CASTING OF DECK SLAB ALONG WITH CROSS GIRDER	35
28 to 42	AVERAGE AGE OF GIRDER WHEN COMPOSITE ACTION TAKES PLACE	35
42 to 56	FIXING THE CRASH BARRIER AND LAYING OFWEARING COAT	35
56	AVERAGE AGE OF GIRDER WHEN SILD & CWLL ON IT	35

REFERENCE DRAWINGS:-

2. REINFORCEMENT DETAILS OF LONGITUDINAL GIRDER:
   –NIRTTP/NAG–MUG/GANESH/RCC–G/17m/02
3. REINFORCEMENT DETAILS OF END CROSS GIRDER:
   –NIRTTP/NAG–MUG/GANESH/RCC–G/17m/03
4. REINFORCEMENT DETAILS OF RCC DECK SLAB:
   –NIRTTP/NAG–MUG/GANESH/RCC–G/17m/04(SHEET 1&2)
5. DETAILS OF LOAD AND FORCES FOR POT/PTFE BEARINGS:
   –NIRTTP/NAG–MUG/GANESH/RCC–G/17m/05

LEGEND:-

- – CAST–IN–SITU PORTION
- – JACK LOCATION IN PLAN
- – JACK LOCATION IN ELEVATION
- – BEARING LOCATION

EMPLOYER	PROJECT	DESIGN CONSULTANT					
Government of Nepal Ministry of Physical Infrastructure and Transport, Department of Roads, Foreign Co-operation Branch	Nepal India Regional Trade and Transport Project (NIRTTP) (IDA CREDIT No. 5273 - NEP) Detailed Design of Kathmandu (Nagdhunga) - Naubise - Mugling Road and Bridges	Intercontinental Consultants & Technocrats Pvt.Ltd, A-8, Green Park, New Delhi - 110016 Ph : 4086-3000, Fax 2685-5252 In Joint Venture With Soosung Engineering Co. Ltd., South Korea	In Association With Full Bright Consultancy (Pvt.) Ltd. 316,Baburam Acharya Sadak, Sinamangal, Kathmandu, GPO Box: 4970, Kathmandu, Nepal	Prepared By		K.M.JOHRI	DRAWING TITLE: DIMENSION DETAILS OF PRECAST RCC GIRDER & CAST-IN-SITU SLAB SUPERSTRUCTURE EFFECTIVE SPAN : 17.00m
				Designed By		V.CHAUDHARY	
				Checked By		P.K.KHAN	Drawing No.: NIRTTP/NAG-MUG/GANESH/RCC-G/17m/01
				Approved By		B.N.SINGH	

Scale:	Date: JUNE-2018
As Shown	(SHEET 1 OF 2)

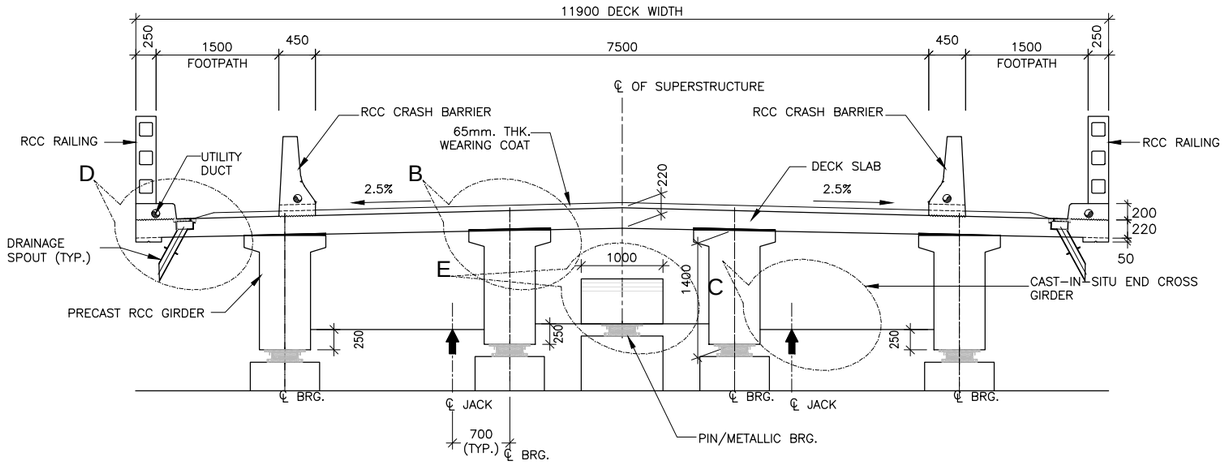

SECTION AT SUPPORT
(SCALE 1:50)

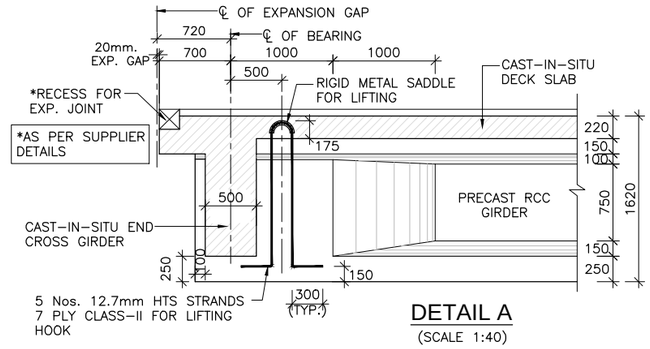

DETAIL A
(SCALE 1:40)

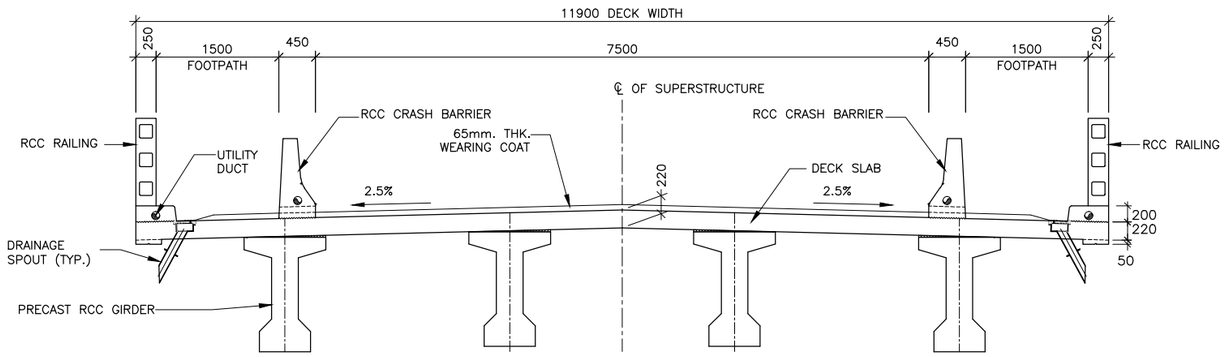

SECTION AT MID
(SCALE 1:50)

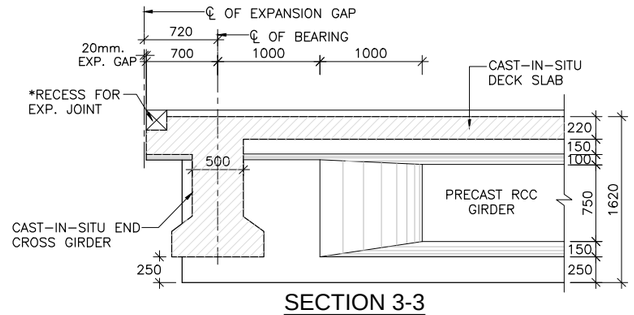

SECTION 3-3
(SCALE 1:40)

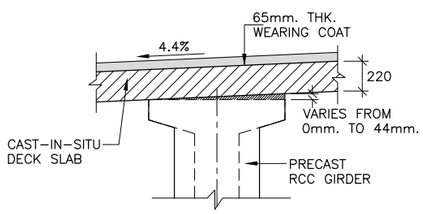

DETAIL -B
(SCALE 1:30)

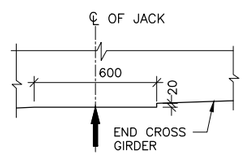

DETAIL - C
DETAIL OF CROSS GIRDERAT JACK LOCATION
(SCALE 1:20)

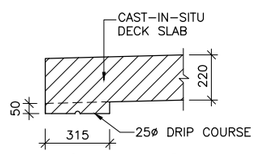

DETAIL - D
(SCALE 1:20)

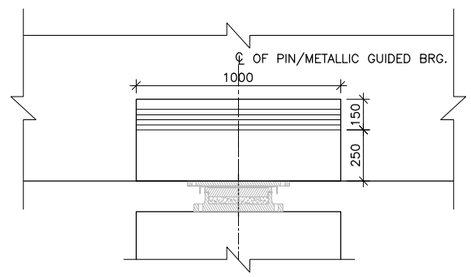

DETAIL - E
(SCALE 1:20)

EMPLOYER	PROJECT	DESIGN CONSULTANT					
Government of Nepal Ministry of Physical Infrastructure and Transport, Department of Roads, Foreign Co-operation Branch	Nepal India Regional Trade and Transport Project (NIRTTP) (IDA CREDIT No. 5273 - NEP) Detailed Design of Kathmandu (Nagdhunga) - Naubise - Mugling Road and Bridges	Intercontinental Consultants & Technocrats Pvt.Ltd, A-8, Green Park, New Delhi - 110016 Ph : 4086-3000, Fax 2685-5252 In Joint Venture With Soosung Engineering Co. Ltd., South Korea	In Association With Full Bright Consultancy (Pvt.) Ltd. 316,Baburam Acharya Sadak, Sinamangal, Kathmandu, GPO Box: 4970, Kathmandu, Nepal	Prepared By		K.M.JOHRI	DRAWING TITLE: DIMENSION DETAILS OF PRECAST RCC GIRDER & CAST-IN-SITU SLAB SUPERSTRUCTURE EFFECTIVE SPAN : 17.00m	Scale:
				Designed By		V.CHAUDHARY		As Shown
				Checked By		P.K.KHAN	Drawing No.:	
				Approved By		B.N.SINGH	NIRTTP/NAG-MUG/GANESH/RCC-G/17m/01	

Date: JUNE-2018

(SHEET 2 OF 2)

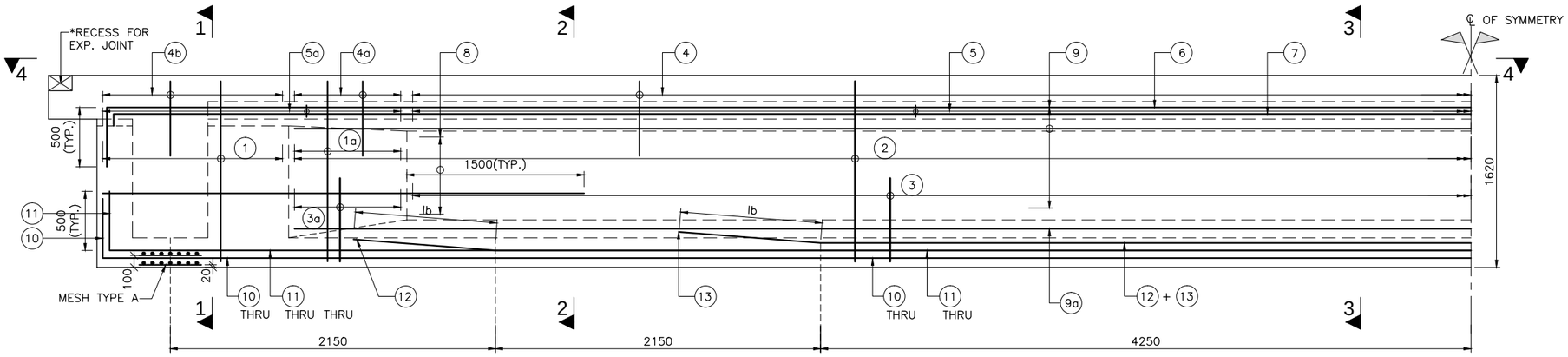

SECTIONAL ELEVATION OF GIRDER

(SCALE 1:30)

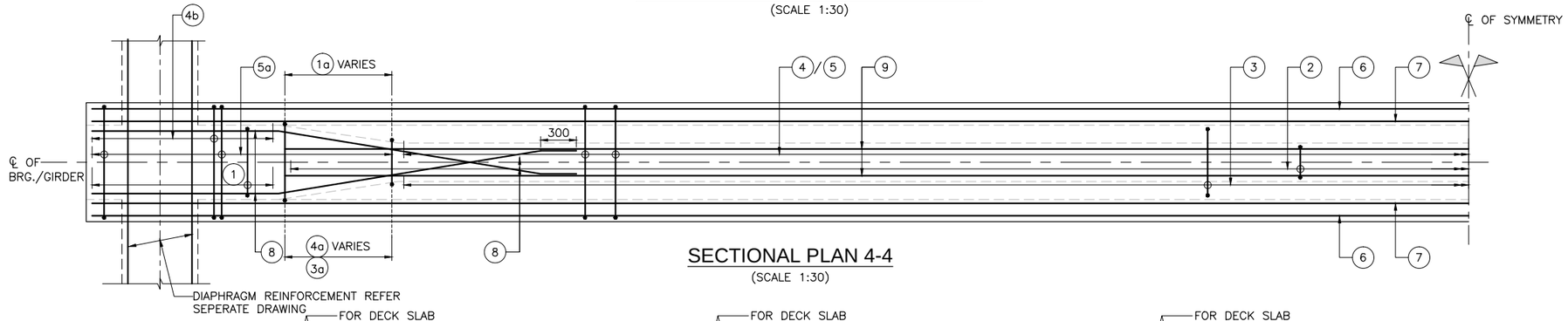

SECTIONAL PLAN 4-4

(SCALE 1:30)

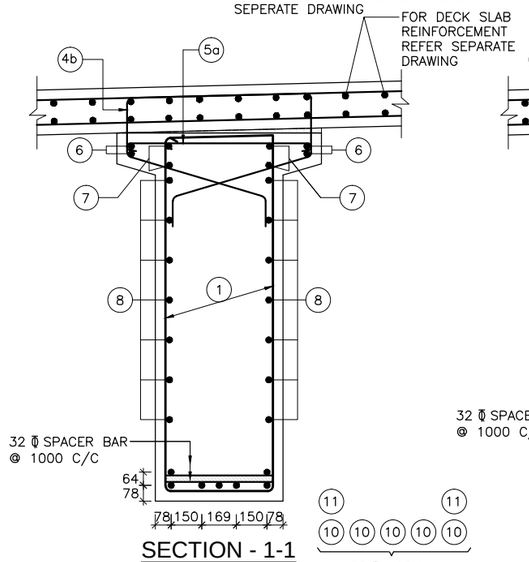

SECTION - 1-1

(SCALE 1:20)

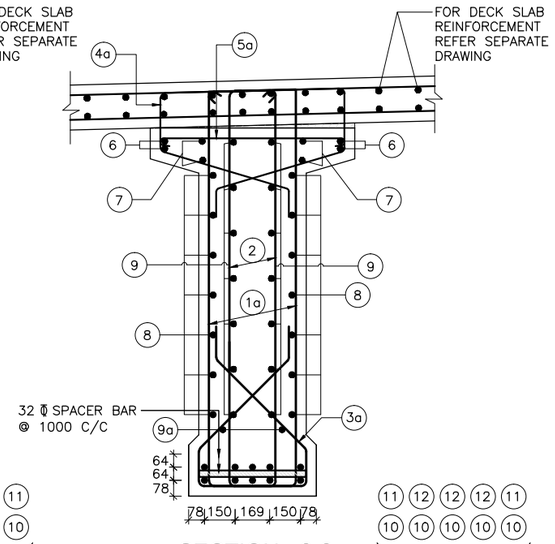

SECTION - 2-2

(SCALE 1:20)

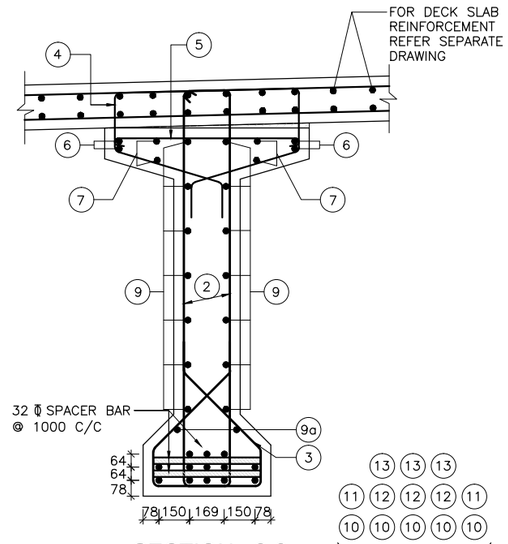

SECTION - 3-3

(SCALE 1:20)

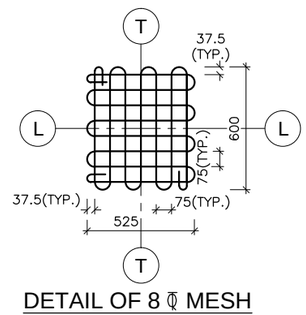

DETAIL OF 8 ϕ MESH TYPE "A"

(IN TWO LAYERS)
(SCALE = 1:20)

NOTES:-

1. ALL DIMENSIONS ARE IN MILLIMETERS AND LEVELS ARE IN METERS UNLESS OTHERWISE SPECIFIED.
2. DIMENSIONS ARE NOT TO BE SCALED. ONLY WRITTEN DIMENSIONS SHALL BE FOLLOWED.
3. UNTENSIONED REINFORCEMENT SHALL BE THERMO MECHANICALLY TREATED (TMT), HYSD BARS OF GRADE DESIGNATION Fe–500D CONFORMING TO IS: 1786.
4. CLEAR COVER TO THE OUTERMOST STEEL SHALL BE 40mm UNLESS OTHERWISE SPECIFIED.
5. LAPPING OF REINFORCEMENT SHALL BE AVOIDED AS FAR AS POSSIBLE. IN CASE LAPPING OF BARS BECOMES UNAVOIDABLE, MINIMUM LAP LENGTH OF REINFORCEMENT BARS SHALL BE CALCULATED AS FOLLOW WITH MAXIMUM ALLOWABLE LAPPING (p) OF 50% ONLY. (IRC:112–2011) (CLAUSE:15.2.5.1)
   LAP LENGTH ls = α_1.lbnet
   α_1 = 1.0 FOR p%≤25%
   α_1 = 1.15 FOR 25%≤p%≤33%
   α_1 = 1.4 FOR 33%≤p%≤50%
   (IRC:112–2011) (CLAUSE:15.2.3.3)
   DEVELOPMENT LENGTH (lbnet)
   lbnet = α.lb (α = 1.0)
   lb = kϕ
   k = 40 FOR M30 (Fe500D)
   k = 36 FOR M35 (Fe500D)
   k = 34 FOR M40 (Fe500D)
   FOR UNFAVORABLE BOND CONDITION THE lb SHOULD BE MULTIPLIED BY FACTOR OF 1.43. FOR ø>32mm lb, SHOULD BE INCREASED BY MULTIPLYING FACTOR ($\frac{100}{132-\phi}$)

REFERENCE DRAWINGS:-

1. DIMENSIONAL DETAILS OF PRECAST RCC GIRDER & CAST–IN–SITU SLAB SUPERSTRUCTURE:
   –NIRTTP/NAG–MUG/GANESH/RCC–G/17m/01(SHEET 1&2)
2. REINFORCEMENT DETAILS OF END CROSS GIRDER:
   –NIRTTP/NAG–MUG/GANESH/RCC–G/17m/03
3. REINFORCEMENT DETAILS OF RCC DECK SLAB:
   –NIRTTP/NAG–MUG/GANESH/RCC–G/17m/04(SHEET 1&2)
4. DETAILS OF LOAD AND FORCES FOR POT/PTFE BEARINGS:
   –NIRTTP/NAG–MUG/GANESH/RCC–G/17m/05

SCHEDULE OF REINFORCEMENT

BAR MKD.	DESCRIPTION	SHAPE	REMARKS
1	2L–12 ϕ @125 C/C		STIRRUP
1a	2L–12 ϕ @125 C/C		STIRRUP (VARIES)
2	2L–12 ϕ @150 C/C		STIRRUP
3	10 ϕ @150 C/C		
3a	10 ϕ @125 C/C		(VARIES)
4	10 ϕ @150 C/C		
4a	10 ϕ @125 C/C		(VARIES)
4b	10 ϕ @125 C/C		
5	10 ϕ @150 C/C		LINKS
5a	10 ϕ @125 C/C		LINKS
6	12 ϕ –4 Nos.		
7	12 ϕ –4 Nos.		
8	10 ϕ –7 Nos.		ON EACH FACE
9	10 ϕ –7 Nos.		ON EACH FACE
9a	10 ϕ –1 Nos.		ON EACH FACE
10	32 ϕ –5 Nos.		
11	32 ϕ –5 Nos.		
12	32 ϕ –3 Nos.		
13	25 ϕ –3 Nos.		

EMPLOYER	PROJECT	DESIGN CONSULTANT					
Government of Nepal Ministry of Physical Infrastructure and Transport, Department of Roads, Foreign Co-operation Branch	Nepal India Regional Trade and Transport Project (NIRTTP) (IDA CREDIT No. 5273 - NEP) Detailed Design of Kathmandu (Nagdhunga) - Naubise - Mugling Road and Bridges	Intercontinental Consultants & Technocrats Pvt.Ltd, A-8, Green Park, New Delhi - 110016 Ph : 4086-3000, Fax 2685-5252 In Joint Venture With Soosung Engineering Co. Ltd., South Korea	In Association With Full Bright Consultancy (Pvt.) Ltd. 316,Baburam Acharya Sadak, Sinamangal, Kathmandu, GPO Box: 4970, Kathmandu, Nepal	Prepared By		K.M.JOHRI	DRAWING TITLE: REINFORCEMENT DETAILS OF LONGITUDINAL GIRDER EFFECTIVE SPAN : 17.00m	Scale: As Shown	Date: JUNE-2018
				Designed By		V.CHAUDHARY			
				Checked By		P.K.KHAN	Drawing No.:		
				Approved By		B.N.SINGH	NIRTTP/NAG-MUG/GANESH/RCC-G/17m/02		

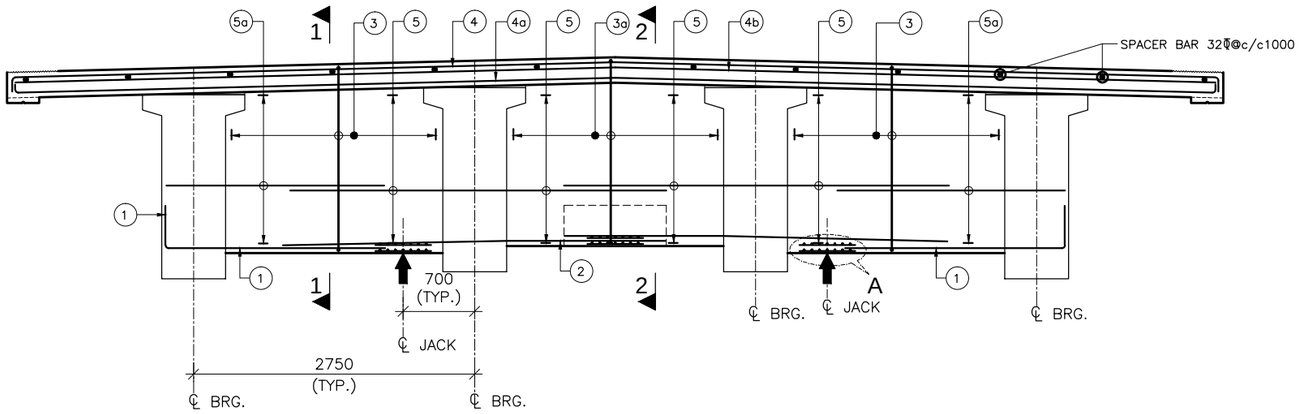

SECTIONAL ELEVATION OF END DIAPHRAGM
(SCALE 1:40)

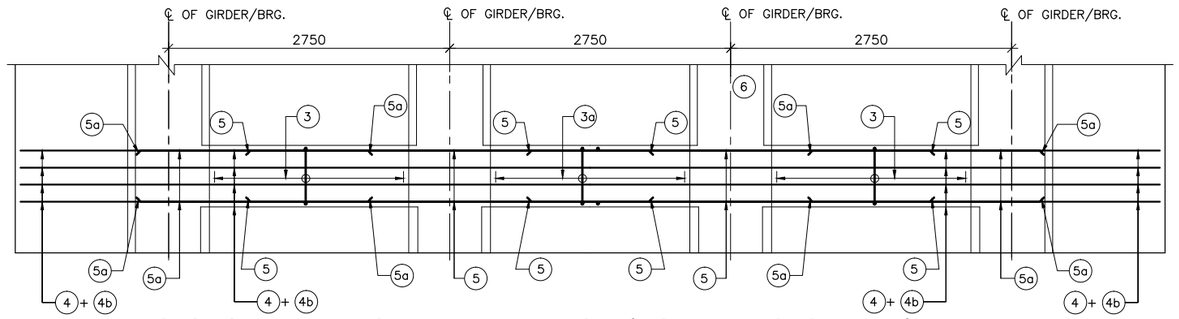

SECTIONAL PLAN OF END DIAPHRAGM (TOP REINFORCEMENT)
(SCALE 1:40)

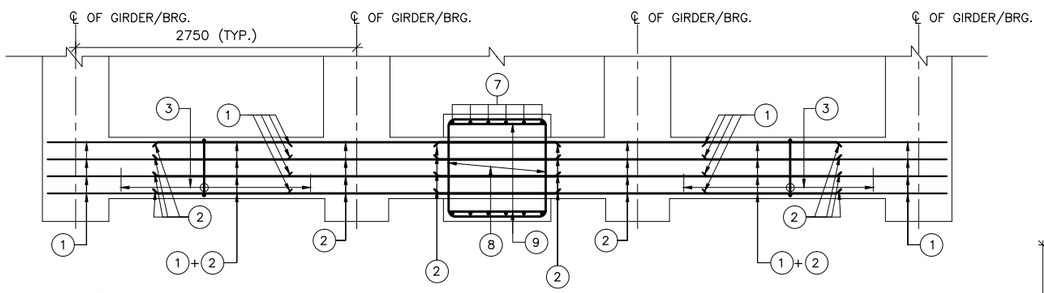

SECTIONAL PLAN OF END DIAPHRAGM (BOTTOM REINFORCEMENT)
(SCALE 1:40)

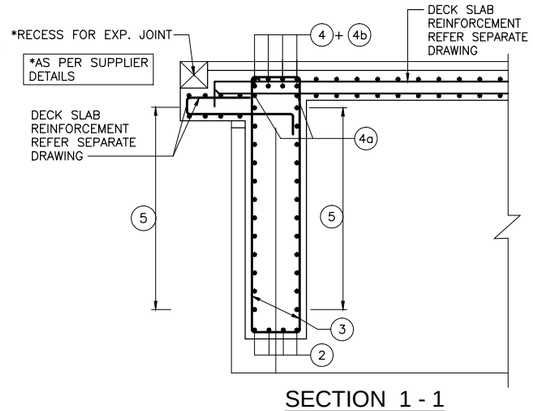

SECTION 1 - 1
(SCALE 1:30)

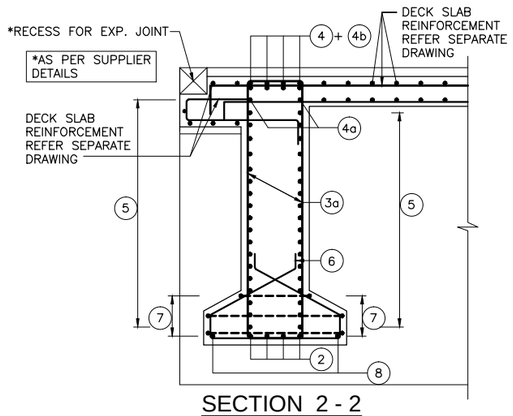

SECTION 2 - 2
(SCALE 1:30)

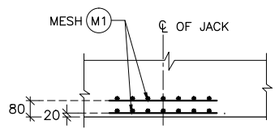

DETAIL - A
(SCALE 1:20)

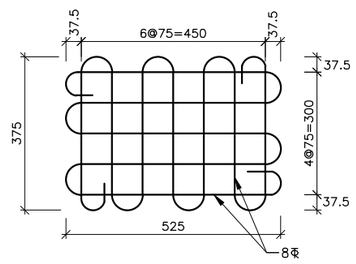

DETAIL OF 8ϕ MESH (M1) REINF. FOR JACK LOCATION
(SCALE 1:10)

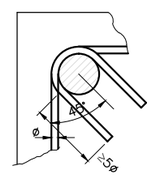

TYPICAL DETAIL INDICATING ANCHORAGE OF STIRRUP
(SCALE 1:30)

NOTES:-

1. ALL DIMENSIONS ARE IN MILLIMETERS AND LEVELS ARE IN METERS UNLESS OTHERWISE SPECIFIED.
2. DIMENSIONS ARE NOT TO BE SCALED. ONLY WRITTEN DIMENSIONS SHALL BE FOLLOWED.
3. UNTENSIONED REINFORCEMENT SHALL BE THERMO MECHANICALLY TREATED (TMT), HYSD BARS OF GRADE DESIGNATION Fe–500D CONFORMING TO IS: 1786.
4. CLEAR COVER TO THE OUTERMOST STEEL SHALL BE 40mm UNLESS OTHERWISE SPECIFIED.
5. LAPPING OF REINFORCEMENT SHALL BE AVOIDED AS FAR AS POSSIBLE. IN CASE LAPPING OF BARS BECOMES UNAVOIDABLE, MINIMUM LAP LENGTH OF REINFORCEMENT BARS SHALL BE CALCULATED AS FOLLOW WITH MAXIMUM ALLOWABLE LAPPING (p) OF 50% ONLY. (IRC:112–2011) (CLAUSE:15.2.5.1)
   LAP LENGTH ls = α1.lbnet
   α1 = 1.0 FOR p%≤25%
   α1 = 1.15 FOR 25%≤p%≤33%
   α1 = 1.4 FOR 33%≤p%≤50%
   (IRC:112–2011) (CLAUSE:15.2.3.3)
   DEVELOPMENT LENGTH (lbnet)
   lbnet = α.lb (α = 1.0)
   lb = kø
   k = 40 FOR M30 (Fe500D)
   k = 36 FOR M35 (Fe500D)
   k = 34 FOR M40 (Fe500D)

FOR UNFAVORABLE BOND CONDITION THE lb SHOULD BE MULTIPLIED BY FACTOR OF 1.43. FOR ø>32mm lb, SHOULD BE INCREASED BY MULTIPLYING FACTOR $(\frac{100}{132-ø})$

REFERENCE DRAWINGS:-

1. DIMENSIONAL DETAILS OF PRECAST RCC GIRDER & CAST–IN–SITU SLAB SUPERSTRUCTURE:
   –NIRTTP/NAG–MUG/GANESH/RCC–G/17m/01(SHEET 1&2)
2. REINFORCEMENT DETAILS OF LONGITUDINAL GIRDER:
   –NIRTTP/NAG–MUG/GANESH/RCC–G/17m/02
3. REINFORCEMENT DETAILS OF RCC DECK SLAB:
   –NIRTTP/NAG–MUG/GANESH/RCC–G/17m/04(SHEET 1&2)
4. DETAILS OF LOAD AND FORCES FOR POT/PTFE BEARINGS:
   –NIRTTP/NAG–MUG/GANESH/RCC–G/17m/05

REINFORCEMENT SCHEDULE

BAR MKD.	DESCRIPTION	SHAPE	REMARKS
1	25ϕ –4 Nos.		
2	25ϕ –4 Nos.		
3	25ϕ –2L @125 C/C		
3a	25ϕ –2L @125 C/C		
4	25ϕ –4 Nos.		
4a	16ϕ –2 Nos.		
4b	25ϕ –4 Nos.		
5	25ϕ –14 Nos.		ON EACH FACE
5a	16ϕ –14 Nos.		ON EACH FACE
6	NOT USED		
7	12ϕ –6 Nos.		
8	12ϕ –2L–3 No.		VARIES
9	10ϕ –2 Nos.		

EMPLOYER	PROJECT	DESIGN CONSULTANT				
Government of Nepal Ministry of Physical Infrastructure and Transport, Department of Roads, Foreign Co-operation Branch	Nepal India Regional Trade and Transport Project (NIRTTP) (IDA CREDIT No. 5273 - NEP) Detailed Design of Kathmandu (Nagdhunga) - Naubise - Mugling Road and Bridges	Intercontinental Consultants & Technocrats Pvt.Ltd, A-8, Green Park, New Delhi - 110016 Ph : 4086-3000, Fax 2685-5252 In Joint Venture With Soosung Engineering Co. Ltd., South Korea	In Association With Full Bright Consultancy (Pvt.) Ltd. 316,Baburam Acharya Sadak, Sinamangal, Kathmandu, GPO Box: 4970, Kathmandu, Nepal	Prepared By	K.M.JOHRI	DRAWING TITLE: REINFORCEMENT DETAILS OF END CROSS GIRDER EFFECTIVE SPAN : 17.00m
				Designed By	V.CHAUDHARY	
				Checked By	P.K.KHAN	Drawing No.: NIRTTP/NAG-MUG/GANESH/RCC-G/17m/03
				Approved By	B.N.SINGH	

Scale: As Shown

Date: JUNE-2018

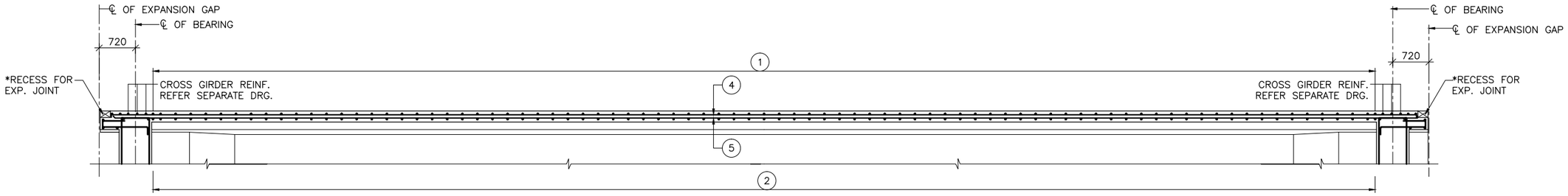

SECTION 1 - 1
(SCALE 1:60)

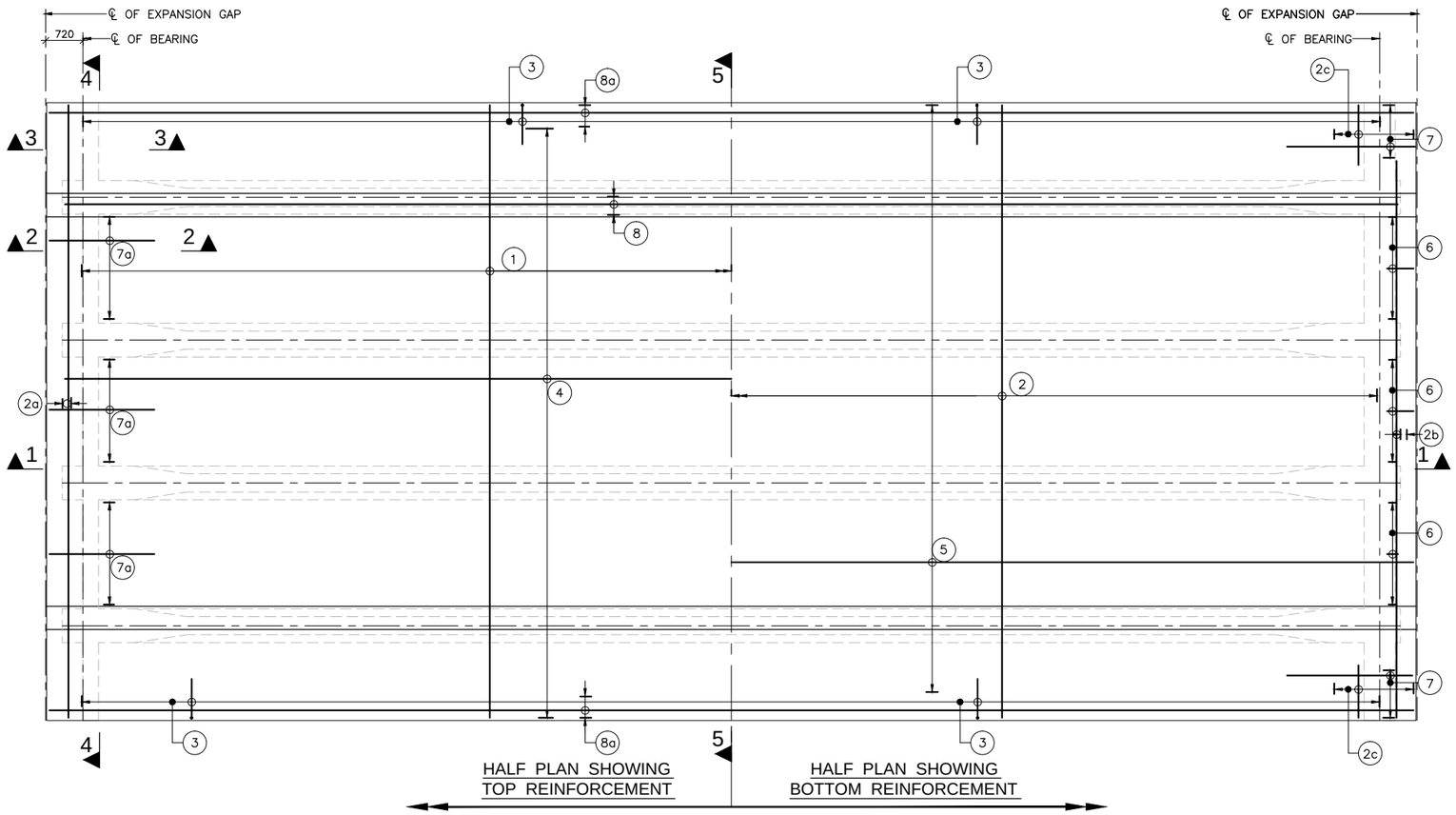

PLAN
(SCALE 1:75)

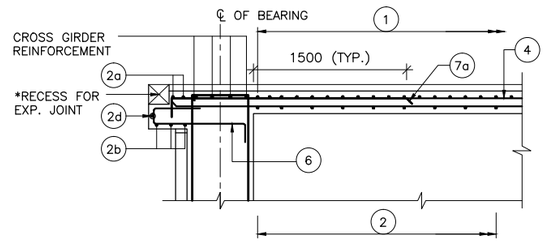

SECTION 2 - 2
(SCALE 1:40)

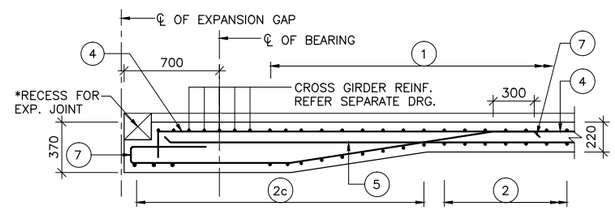

SECTION 3 - 3
(SCALE 1:30)

EMPLOYER	PROJECT	DESIGN CONSULTANT					
Government of Nepal Ministry of Physical Infrastructure and Transport, Department of Roads, Foreign Co-operation Branch	Nepal India Regional Trade and Transport Project (NIRTTP) (IDA CREDIT No. 5273 - NEP) Detailed Design of Kathmandu (Nagdhunga) - Naubise - Mugling Road and Bridges	Intercontinental Consultants & Technocrats Pvt.Ltd, A-8, Green Park, New Delhi - 110016 Ph : 4086-3000, Fax 2685-5252 In Joint Venture With Soosung Engineering Co. Ltd., South Korea	In Association With Full Bright Consultancy (Pvt.) Ltd. 316,Baburam Acharya Sadak, Sinamangal, Kathmandu, GPO Box: 4970, Kathmandu, Nepal	Prepared By		K.M.JOHRI	DRAWING TITLE: REINFORCEMENT DETAILS OF DECK SLAB EFFECTIVE SPAN : 17.00m	Scale:
				Designed By		V.CHAUDHARY		As Shown
				Checked By		P.K.KHAN	Drawing No.:	
				Approved By		B.N.SINGH	NIRTTP/NAG-MUG/GANESH/RCC-G/17m/04	

Date: JUNE-2018

(SHEET 1 OF 2)

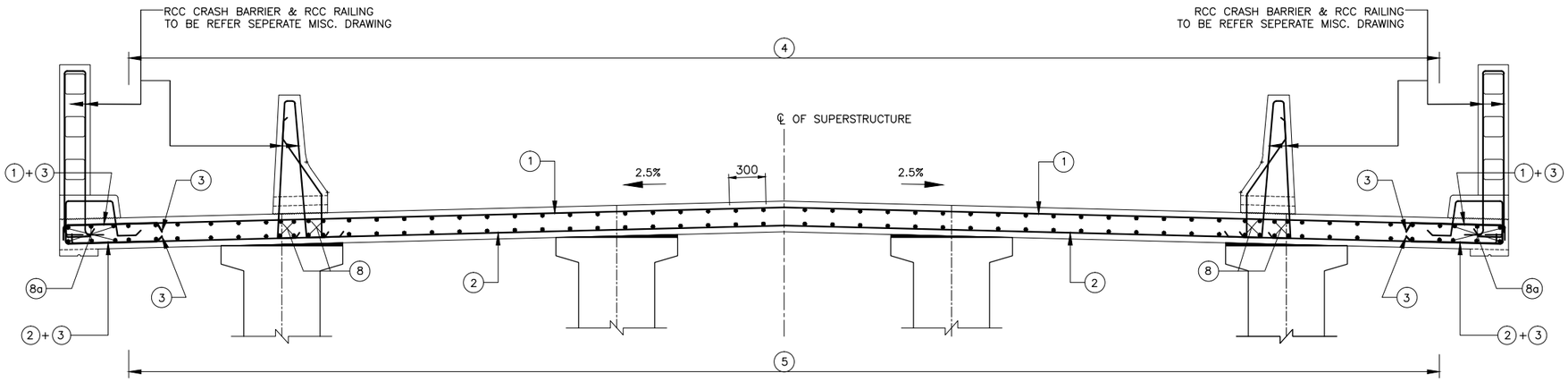

SECTION AT 5 - 5 (MID SPAN)

(SCALE 1:30)

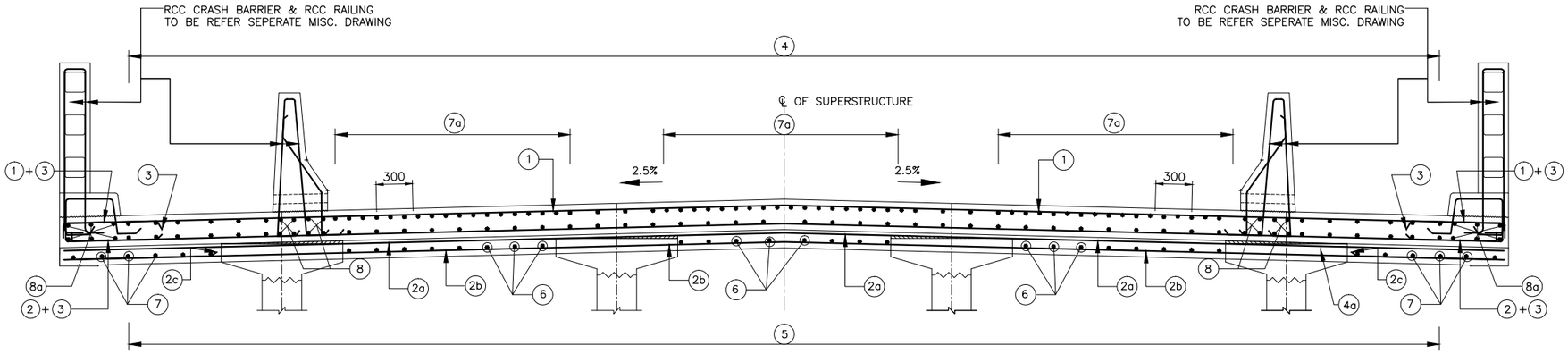

SECTION AT 4 - 4 (NEAR SUPPORT)

(SCALE 1:30)

FOR RCC CRASH BARRIER REINF.
REFER MISCELLANEOUS DRG.

NOTES:-

1. ALL DIMENSIONS ARE IN MILLIMETERS AND LEVELS ARE IN METERS UNLESS OTHERWISE SPECIFIED.
2. DIMENSIONS ARE NOT TO BE SCALED. ONLY WRITTEN DIMENSIONS SHALL BE FOLLOWED.
3. UNTENSIONED REINFORCEMENT SHALL BE THERMO MECHANICALLY TREATED (TMT), HYSD BARS OF GRADE DESIGNATION Fe–500D CONFORMING TO IS: 1786.
4. CLEAR COVER TO THE OUTERMOST STEEL SHALL BE 40mm UNLESS OTHERWISE SPECIFIED.
5. LAPPING OF REINFORCEMENT SHALL BE AVOIDED AS FAR AS POSSIBLE. IN CASE LAPPING OF BARS BECOMES UNAVOIDABLE, MINIMUM LAP LENGTH OF REINFORCEMENT BARS SHALL BE CALCULATED AS FOLLOW WITH MAXIMUM ALLOWABLE LAPPING (p) OF 50% ONLY. (IRC:112–2011) (CLAUSE:15.2.5.1)
   LAP LENGTH ls = $\alpha 1$.lbnet
   $\alpha 1$ = 1.0 FOR p%≤25%
   $\alpha 1$ = 1.15 FOR 25%≤p%≤33%
   $\alpha 1$ = 1.4 FOR 33%≤p%≤50%
   (IRC:112–2011) (CLAUSE:15.2.3.3)
   DEVELOPMENT LENGTH (lbnet)
   lbnet = α.lb (α = 1.0)
   lb = kϕ
   k = 40 FOR M30 (Fe500D)
   k = 36 FOR M35 (Fe500D)
   k = 34 FOR M40 (Fe500D)
   FOR UNFAVORABLE BOND CONDITION THE lb SHOULD BE MULTIPLIED BY FACTOR OF 1.43. FOR ϕ>32mm lb, SHOULD BE INCREASED BY MULTIPLYING FACTOR $(\frac{132-\phi}{100})$
6. RECESS FOR EXPANSION JOINT, AS PER SUPPLIER DETAILS.

REFERENCE DRAWINGS:-

1. DIMENSIONAL DETAILS OF PRECAST RCC GIRDER & CAST–IN–SITU SLAB SUPERSTRUCTURE:
   –NIRTTP/NAG–MUG/GANESH/RCC–G/17m/01(SHEET 1&2)
2. REINFORCEMENT DETAILS OF LONGITUDINAL GIRDER:
   –NIRTTP/NAG–MUG/GANESH/RCC–G/17m/02
3. REINFORCEMENT DETAILS OF END CROSS GIRDER:
   –NIRTTP/NAG–MUG/GANESH/RCC–G/17m/03
4. DETAILS OF LOAD AND FORCES FOR POT/PTFE BEARINGS:
   –NIRTTP/NAG–MUG/GANESH/RCC–G/17m/05

REINFORCEMENT SCHEDULE

BAR MKD.	DESCRIPTION	SHAPE	REMARKS
1	12ϕ @100 C/C		
2	12ϕ @100 C/C		
2a	12ϕ @100 C/C		
2b	12ϕ @100 C/C		
2c	12ϕ @100 C/C		
2d	12ϕ –1 Nos.		
3	12ϕ @100 C/C		
4	10ϕ @200 C/C		
5	10ϕ @200 C/C		
6	12ϕ @200 C/C		
7	12ϕ @200 C/C		
7a	12ϕ @200 C/C		
8	16ϕ –8 Nos.		(ON EACH SIDE)
8a	16ϕ –6 Nos.		(ON EACH SIDE)

EMPLOYER	PROJECT	DESIGN CONSULTANT					
Government of Nepal Ministry of Physical Infrastructure and Transport, Department of Roads, Foreign Co-operation Branch	Nepal India Regional Trade and Transport Project (NIRTTP) (IDA CREDIT No. 5273 - NEP) Detailed Design of Kathmandu (Nagdhunga) - Naubise - Mugling Road and Bridges	Intercontinental Consultants & Technocrats Pvt.Ltd, A-8, Green Park, New Delhi - 110016 Ph : 4086-3000, Fax 2685-5252 In Joint Venture With Soosung Engineering Co. Ltd., South Korea	In Association With Full Bright Consultancy (Pvt.) Ltd. 316,Baburam Acharya Sadak, Sinamangal, Kathmandu, GPO Box: 4970, Kathmandu, Nepal	Prepared By		K.M.JOHRI	DRAWING TITLE: REINFORCEMENT DETAILS OF DECK SLAB EFFECTIVE SPAN : 17.00m	Scale:	Date: JUNE-2018
				Designed By		V.CHAUDHARY		As Shown	
				Checked By		P.K.KHAN	Drawing No.:		(SHEET 2 OF 2)
				Approved By		B.N.SINGH	NIRTTP/NAG-MUG/GANESH/RCC-G/17m/04		

LEGEND:-

B1	⊕	FREE SLIDING POT–CUM–PTFE BEARING
B2	◎	PIN BEARING
B3	▭	METALLIC GUIDED BEARING

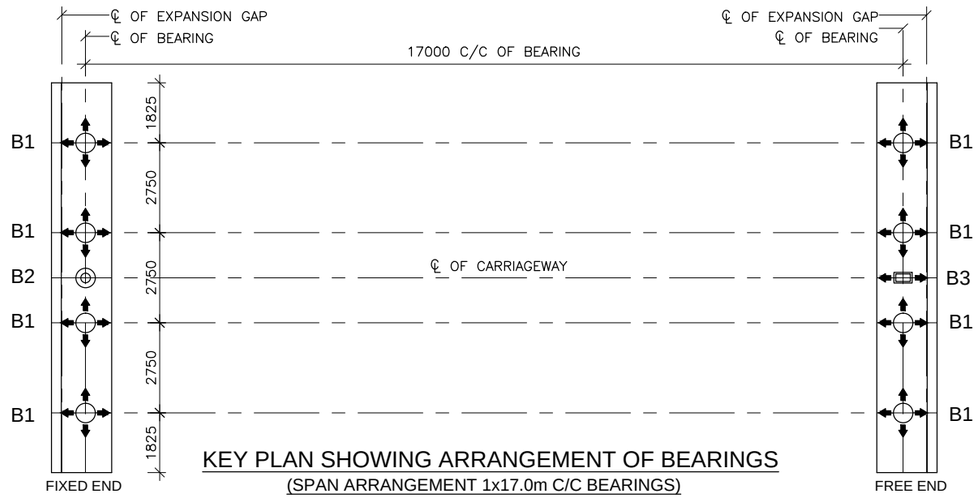

KEY PLAN SHOWING ARRANGEMENT OF BEARINGS

(SPAN ARRANGEMENT 1x17.0m C/C BEARINGS)

NOTES:–

1. MATERIAL SPECIFICATIONS, DESIGN OF BEARINGS, ACCEPTANCE CRITERIA AND INSTALLATION MORTH SHALL BE IN ACCORDANCE WITH IRC:83 (PART III)–2002 AND MOSRTH SPECIFICATIONS (FOURTH REVISION).
2. BEARINGS SHALL BE OBTAINED FROM MANUFACTURERS APPROVED BY MORTH.
3. INSTALLATION OF BEARINGS SHALL BE UNDER THE SUPERVISION OF REPRESENTATIVE OF THE MANUFACTURER.
4. FOR DESIGN LOADS AND ROTATIONS REFER TABLE IN THE DRAWING.
5. FOR BEARINGS, DETAILED SHOP DRAWINGS SHALL BE PREPARED BY THE SUPPLIER AND BE DULY APPROVED BEFORE MANUFACTURE AND INSTALLATION.
6. THE GROUT/BEDDING MORTAR SHALL BE HIGH STRENGTH FREE FLOWING NON SHRINK GROUT (80 MPa STRENGTH).
7. ALL BEARING SHALL BE PLACED IN TRULY HORIZONTAL PLANE ONLY.
8. FOR DESIGN OF POT BEARINGS, THE DESIGN HORIZONTAL FORCE SHALL, IN NO CASE BE LESS THAN 10% AND GREATER THAN 25% OF THE DESIGN VERTICAL LOAD.
9. THE CONTRACTOR AND SUPPLIER OF BEARINGS SHALL BE FURNISH A MINIMUM TROUBLE FREE WARRANTY OF 10 YEARS AFTER OPENING OF THE BRIDGE.
10. THIS DRAWING SHALL BE READ IN CONJUNCTION WITH:
    DIMENSIONAL DETAILS OF PRECAST RCC GIRDER & CAST–IN–SITU SLAB SUPERSTRUCTURE
    NIRTTP/NAG–MUG/GANESH/RCC–G/17m/01(SHEET 1&2)

GENERAL DATA:

1. STRUCTURE IS LOCATED IN SEISMIC ZONE : V
2. GRADE OF CONCRETE
   ABUTMENT CAP. M–30
   PEDESTAL M–40

TABLE SHOWING DATA FOR DESIGN OF BEARINGS

SL. No.	BEARING TYPE	LOAD CONDITION	LOADS, FORCES, MOVEMENTS AND ROTATION DATA										BEARING (Nos.) PER SPAN
			VERTICAL LOAD (kN)		HORIZONTAL FORCE (kN)				ROTATION (RAD)		MOVEMENT (mm)		
			CASE	MAGNITUDE	LONGITUDINAL		TRANSVERSE		CASE	MAGNITUDE	LONGITUDINAL	TRANSVERSE	
(1)	(2)	(3)	(4)	(5)	(6)	(7)	(8)	(9)	(10)	(11)	(12)	(13)	(14)
1.	FREE POT –CUM PTFE	NORMAL	MAXIMUM (WITH LIVE LOAD)	953	COEXISTING	95	COEXISTING	–	COEXISTING	0.002	–12.7/12.6	4.70	8
			MINIMUM (WITH LIVE LOAD)	378	COEXISTING	38	COEXISTING	–	COEXISTING	0.002	–12.7/12.6	4.70	
			MINIMUM (WITHOUT LIVE LOAD)	310	COEXISTING	31	COEXISTING	–	COEXISTING	0.002	–12.7/12.6	4.70	
		SEISMIC (LONGITUDINAL)	MAXIMUM (WITH LIVE LOAD)	599	COEXISTING	–	COEXISTING	–	COEXISTING	0.002	–12.7/12.6	4.70	
			MINIMUM (WITH LIVE LOAD)	359	COEXISTING	–	COEXISTING	–	COEXISTING	0.002	–12.7/12.6	4.70	
			MINIMUM (WITHOUT LIVE LOAD)	343	COEXISTING	–	COEXISTING	–	COEXISTING	0.002	–12.7/12.6	4.70	
		SEISMIC (TRANSVERSE)	MAXIMUM (WITH LIVE LOAD)	599	COEXISTING	–	COEXISTING	–	COEXISTING	0.002	–12.7/12.6	4.70	
			MINIMUM (WITH LIVE LOAD)	359	COEXISTING	–	COEXISTING	–	COEXISTING	0.002	–12.7/12.6	4.70	
			MINIMUM (WITHOUT LIVE LOAD)	343	COEXISTING	–	COEXISTING	–	COEXISTING	0.002	–12.7/12.6	4.70	
2.	PIN BEARING	NORMAL	MAXIMUM (WITH LIVE LOAD)	–	COEXISTING	212	COEXISTING	–	COEXISTING	0.002	–	–	1
			MINIMUM (WITH LIVE LOAD)	–	COEXISTING	172	COEXISTING	–	COEXISTING	0.002	–	–	
			MINIMUM (WITHOUT LIVE LOAD)	–	COEXISTING	172	COEXISTING	–	COEXISTING	0.002	–	–	
		SEISMIC (LONGITUDINAL)	MAXIMUM (WITH LIVE LOAD)	–	COEXISTING	1806	COEXISTING	280	COEXISTING	0.002	–	–	
			MINIMUM (WITH LIVE LOAD)	–	COEXISTING	1806	COEXISTING	265	COEXISTING	0.002	–	–	
			MINIMUM (WITHOUT LIVE LOAD)	–	COEXISTING	1770	COEXISTING	266	COEXISTING	0.002	–	–	
		SEISMIC (TRANSVERSE)	MAXIMUM (WITH LIVE LOAD)	–	COEXISTING	567	COEXISTING	932	COEXISTING	0.002	–	–	
			MINIMUM (WITH LIVE LOAD)	–	COEXISTING	567	COEXISTING	885	COEXISTING	0.002	–	–	
			MINIMUM (WITHOUT LIVE LOAD)	–	COEXISTING	567	COEXISTING	590	COEXISTING	0.002	–	–	
3.	METALLIC GUIDE BEARING	NORMAL	MAXIMUM (WITH LIVE LOAD)	–	COEXISTING	–	COEXISTING	–	COEXISTING	0.002	–12.7/12.6	–	1
			MINIMUM (WITH LIVE LOAD)	–	COEXISTING	–	COEXISTING	–	COEXISTING	0.002	–12.7/12.6	–	
			MINIMUM (WITHOUT LIVE LOAD)	–	COEXISTING	–	COEXISTING	–	COEXISTING	0.002	–12.7/12.6	–	
		SEISMIC (LONGITUDINAL)	MAXIMUM (WITH LIVE LOAD)	–	COEXISTING	–	COEXISTING	280	COEXISTING	0.002	–12.7/12.6	–	
			MINIMUM (WITH LIVE LOAD)	–	COEXISTING	–	COEXISTING	265	COEXISTING	0.002	–12.7/12.6	–	
			MINIMUM (WITHOUT LIVE LOAD)	–	COEXISTING	–	COEXISTING	266	COEXISTING	0.002	–12.7/12.6	–	
		SEISMIC (TRANSVERSE)	MAXIMUM (WITH LIVE LOAD)	–	COEXISTING	–	COEXISTING	932	COEXISTING	0.002	–12.7/12.6	–	
			MINIMUM (WITH LIVE LOAD)	–	COEXISTING	–	COEXISTING	885	COEXISTING	0.002	–12.7/12.6	–	
			MINIMUM (WITHOUT LIVE LOAD)	–	COEXISTING	–	COEXISTING	590	COEXISTING	0.002	–12.7/12.6	–	

EMPLOYER	PROJECT	DESIGN CONSULTANT					
Government of Nepal Ministry of Physical Infrastructure and Transport, Department of Roads, Foreign Co-operation Branch	Nepal India Regional Trade and Transport Project (NIRTTP) (IDA CREDIT No. 5273 - NEP) Feasibility Study of Kathmandu (Nagdhunga) -Detailed Design of Kathmandu (Nagdhunga) -Naubise - Mugling Road and BridgesNaubise - Mugling Road and Bridges	Intercontinental Consultants & Technocrats Pvt.Ltd, A-8, Green Park, New Delhi - 110016 Ph : 4086-3000, Fax 2685-5252 In Joint Venture With Soosung Engineering Co. Ltd., South Korea	In Association With Full Bright Consultancy (Pvt.) Ltd. 316,Baburam Acharya Sadak, Sinamangal, Kathmandu, GPO Box: 4970, Kathmandu, Nepal	Prepared By	K.M.JOHRI	DRAWING TITLE: DETAILS OF LOADS AND FORCES FOR POT/PTFE BEARINGS EFFECTIVE SPAN : 17.00m	Scale: As Shown
				Designed By	V.CHAUDHARY		Date: JUNE-2018
				Checked By	P.K.KHAN	Drawing No.: NIRTTP/NAG-MUG/GANESH/RCC-G/17m/05	
				Approved By	B.N.SINGH		

SOPYANG KHOLA BRIDGE

CHAINAGE : 5+145

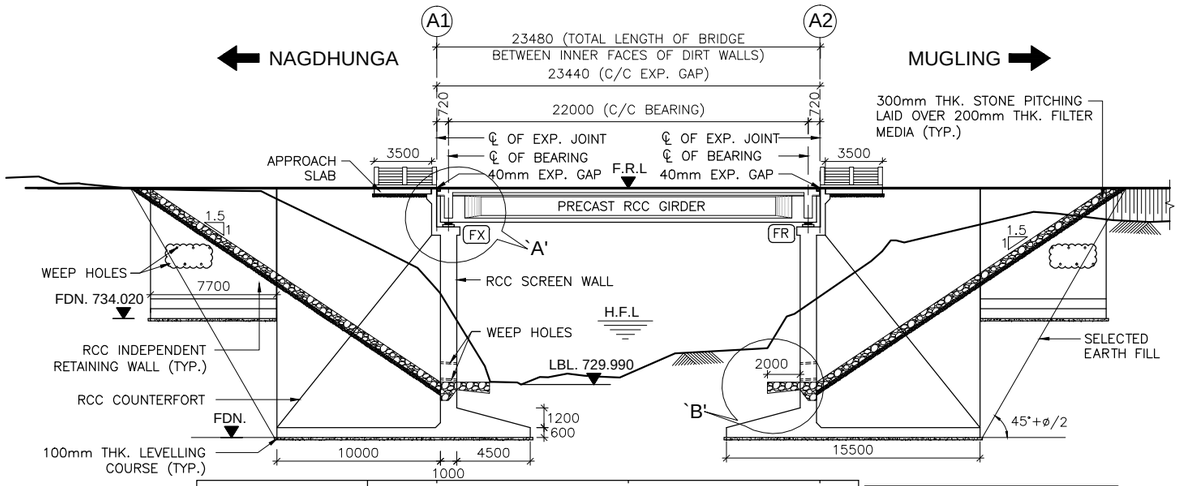

FINISHED ROAD LEVEL (m)	742.000	742.000	742.000	CHAINAGE AT 0.000m IS 5+145 KM
GROUND LEVEL (m)	735.811	730.642	735.380	
FOUNDING LEVEL (m)	726.750		726.750	
CHAINAGE (m)	(−)11.000	0.000	11.000	

LONGITUDINAL ELEVATION OF PROPOSED BRIDGE

(SCALE 1:250)

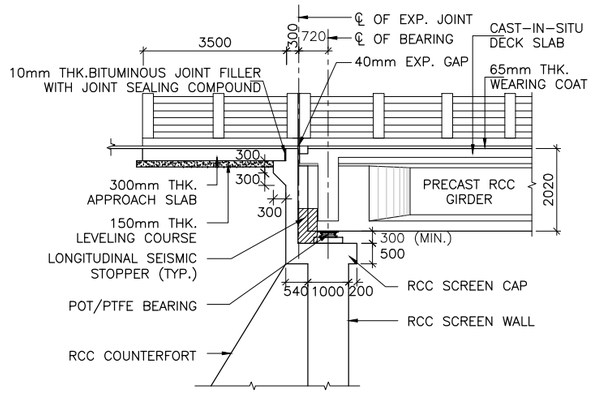

DETAIL-'A'

(SCALE 1:100)

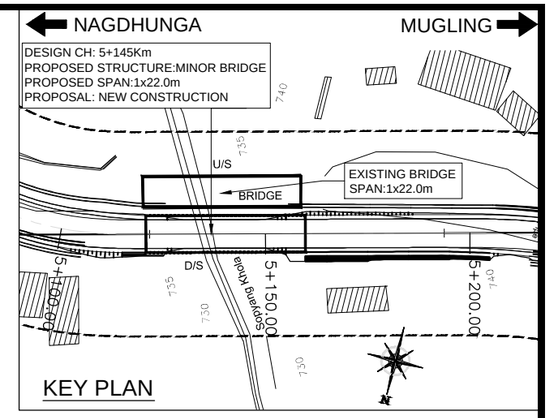

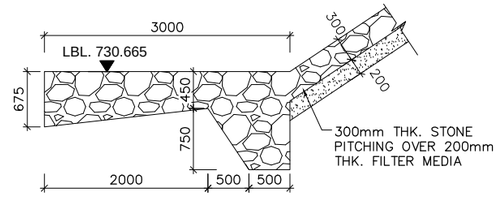

DETAIL-`B'

SCALE−1:50

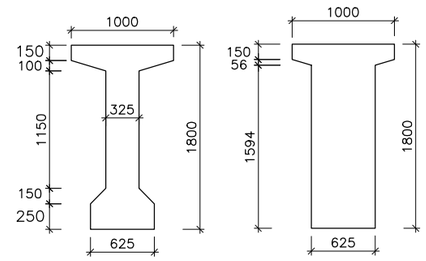

AT MID SPAN AT SUPPORT

CROSS SECTION OF PRECAST RCC GIRDER FOR 22m SPAN

(SCALE 1:40)

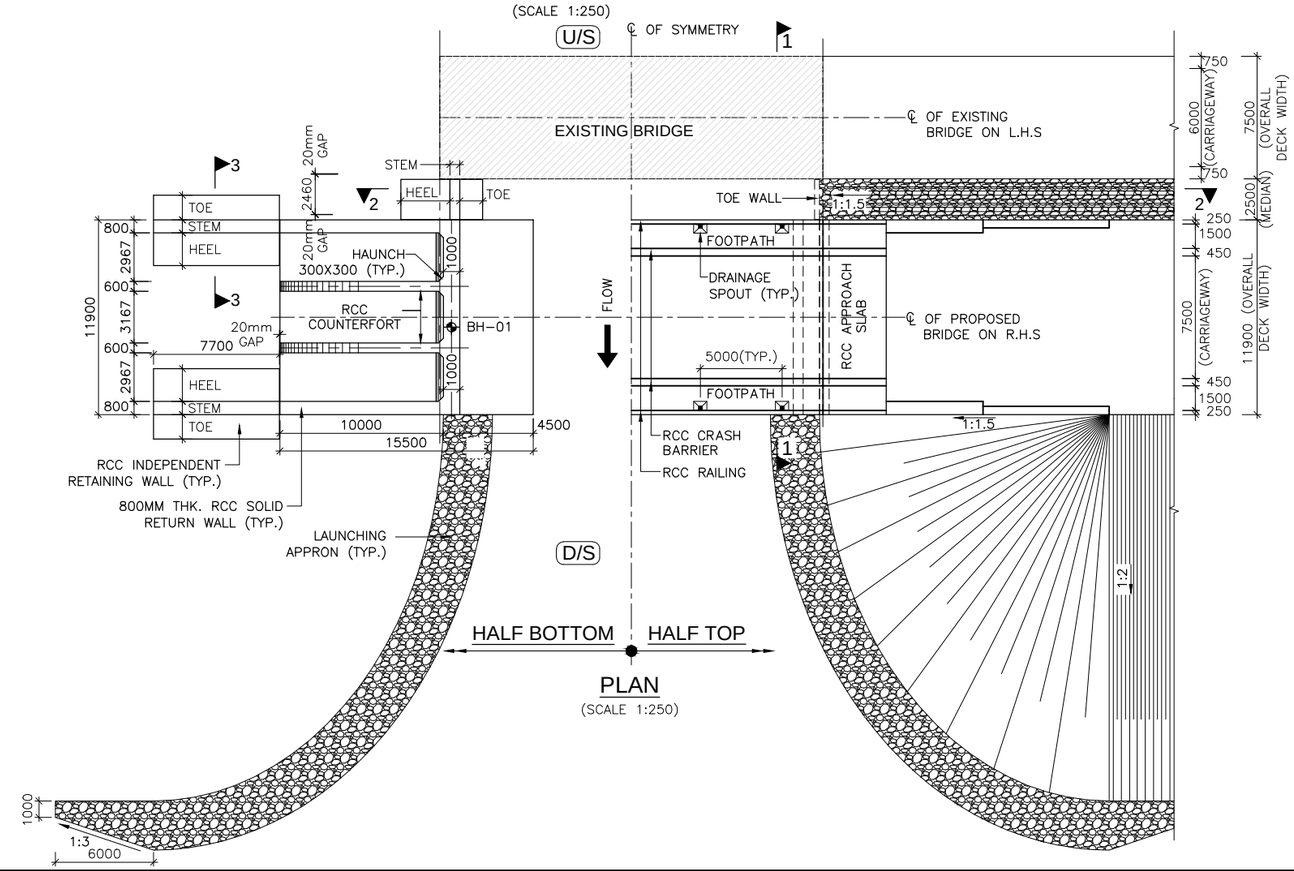

PLAN

(SCALE 1:250)

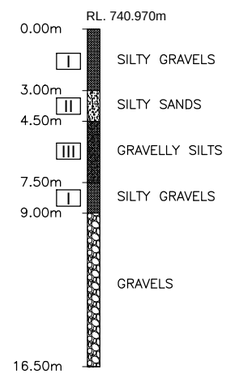

BH-01

(SCALE 1:200)

HYDRAULIC DATA:-

DISCHARGE	− 70 cumec
VELOCITY	− 3.64m/s
H.F.L	− 733.220m
M.S.L AT ABUTMENT	− 728.750

LEGEND:

F.R.L	: FINISHED ROAD LEVEL
H.F.L	: HIGH FLOOD LEVEL
℄	: CENTER LINE
LVL.	: LEVEL
RL.	: REDUCED LEVEL
TYP.	: TYPICAL
THK.	: THICK
D/S	: DOWNSTREAM
U/S	: UPSTREAM
G.L	: GROUND LEVEL
L.B.L	: LOWEST BED LEVEL
FDN.	: FOUNDING LEVEL
FX	: FIX
FR	: FREE
EXISTING	:
PROPOSED	:
BH	: BORE HOLE

EMPLOYER	PROJECT	DESIGN CONSULTANT			
Government of Nepal Ministry of Physical Infrastructure and Transport, Department of Roads, Foreign Co-operation Branch	Nepal India Regional Trade and Transport Project (NIRTTP) (IDA CREDIT No. 5273 - NEP) Feasibility Study of Kathmandu (Nagdhunga) -Feasibility Study of Kathmandu (Nagdhunga) -Feasibility Study of Kathmandu (Nagdhunga) -Detailed Design of Kathmandu (Nagdhunga) -Feasibility Study of Kathmandu (Nagdhunga) -Feasibility Study of Kathmandu (Nagdhunga) -Naubise - Mugling Road and BridgesNaubise - Mugling Road and BridgesNaubise - Mugling	Intercontinental Consultants & Technocrats Pvt.Ltd, A-8, Green Park, New Delhi - 110016 Ph : 4086-3000, Fax 2685-5252 In Joint Venture With Soosung Engineering Co. Ltd., South Korea In Association With Full Bright Consultancy (Pvt.) Ltd. 316,Baburam Acharya Sadak, Sinamangal, Kathmandu, GPO Box: 4970, Kathmandu, Nepal			

Prepared By		M.L.GUPTA
Designed By		V.CHAUDHARY
Checked By		P.K.KHAN
Approved By		B.N.SINGH

DRAWING TITLE: GENERAL ARRANGEMENT DRAWING FOR MINOR BRIDGE AT CH: 5+145KM OVER SOPYANG KHOLA (1x22.0m) PACKAGE-II (NAUBISE-GALCHI)

Drawing No.: NIRTTP/NAG-MUG/SOPYANG/GAD

Scale: As Shown

Date: JUNE-2018

(SHEET 1 OF 2)

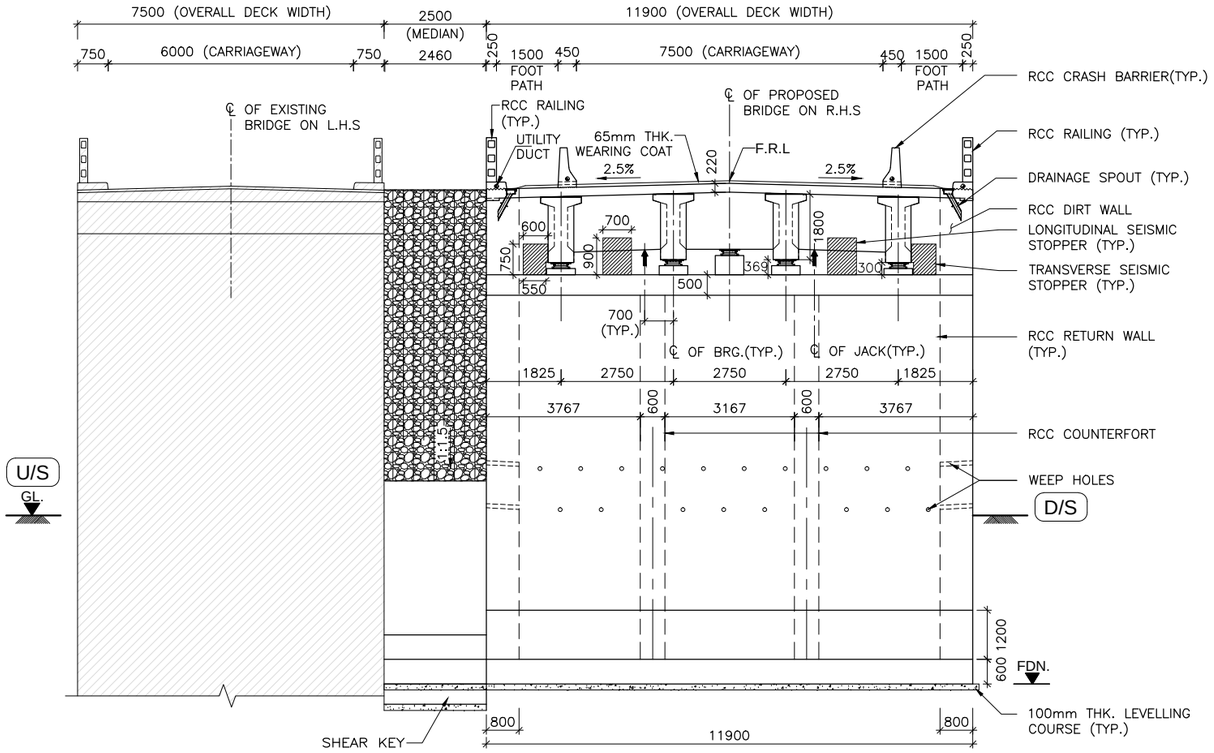

SECTION 1-1

(SCALE 1:100)

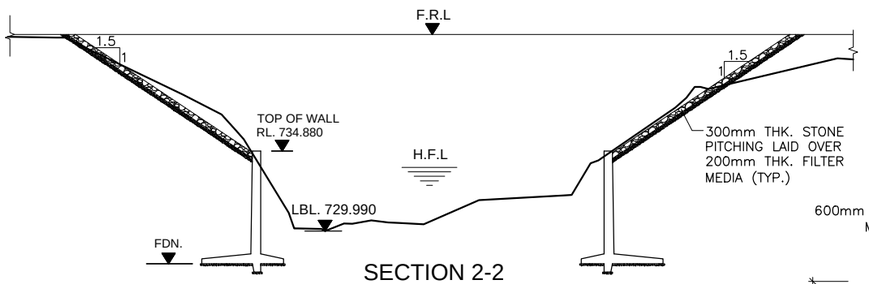

SECTION 2-2

(SCALE 1:250)

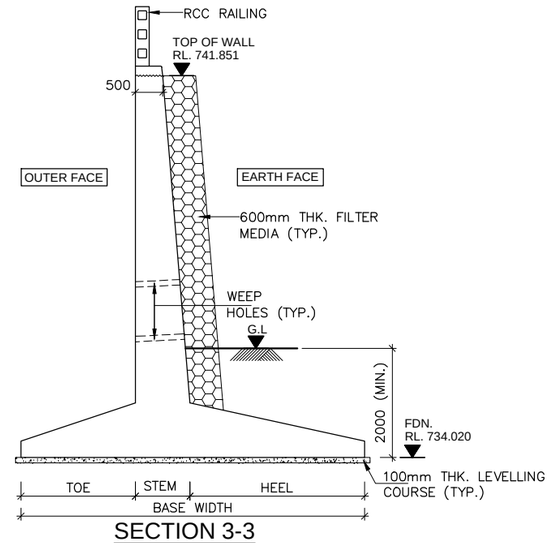

SECTION 3-3

(REFER SEPARATE DRAWING FOR DETAILS)

(SCALE 1:75)

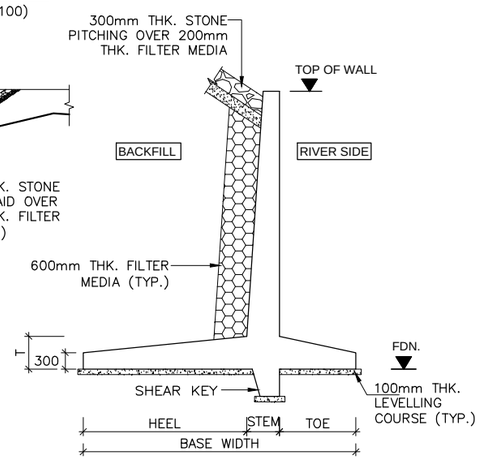

DETAIL OF TOE WALL

(REFER SEPARATE DRAWING FOR DETAILS)

(SCALE 1:75)

REFERENCE DRAWINGS:-

1. DIMENSIONAL DETAILS OF COUNTER FORT TYPE ABUTMENT & ITS COMPONENTS:
   –NIRTTP/NAG–MUG/SOPYANG/SUB–01
2. REINFORCEMENT DETAILS OF COUNTER FORT TYPE ABUTMENT & ITS COMPONENTS, DIRT WALL, RETURN WALL, PEDESTAL AND SEISMIC STOPPER:
   –NIRTTP/NAG–MUG/SOPYANG/SUB–02(SHEET–1 TO 3)
3. DIMENSIONAL DETAILS OF PRECAST RCC GIRDER & CAST–IN–SITU SLAB SUPERSTRUCTURE:
   –NIRTTP/NAG–MUG/SOPYANG/RCC–G/22m/01
4. REINFORCEMENT DETAILS OF LONGITUDINAL GIRDER:
   –NIRTTP/NAG–MUG/SOPYANG/RCC–G/22m/02
5. REINFORCEMENT DETAILS OF END CROSS GIRDER:
   –NIRTTP/NAG–MUG/SOPYANG/RCC–G/22m/03
6. REINFORCEMENT DETAILS OF RCC DECK SLAB:
   –NIRTTP/NAG–MUG/SOPYANG/RCC–G/22m/04 (SHEET 1 & 2)
7. DETAILS OF LOAD AND FORCES FOR POT/PTFE BEARINGS:
   –NIRTTP/NAG–MUG/SOPYANG/RCC–G/22m/05

MISCELLANEOUS DRAWINGS:

1. DETAILS OF APPROACH SLAB:
   –NIRTTP/NAG–MUG/PACKAGE–II/MISC.–01
2. DETAILS OF DRAINAGE SPOUT & WEARING COAT:
   –NIRTTP/NAG–MUG/PACKAGE–II/MISC.–02
3. DIMENSIONAL & REINF. DETAILS OF R.C.C CRASH BARRIER:
   –NIRTTP/NAG–MUG/PACKAGE–II/MISC.–03
4. DIMENSIONAL & REINF. DETAILS OF R.C.C RAILING:
   –NIRTTP/NAG–MUG/PACKAGE–II/MISC.–04
5. DIMENSIONAL AND REINFORCEMENT DETAILS OF RCC RETAINING WALL/MEDIAN WALL:
   –NIRTTP/NAG–MUG/PACKAGE–II/MISC.–06
6. DIMENSIONAL AND REINFORCEMENT DETAILS OF RCC TOE WALL:
   –NIRTTP/NAG–MUG/PACKAGE–II/MISC.–07

FACE OF OLD ABUTMENT SHALL BE MATCHED WITH PROPOSED BRIDGE ABUTMENT. IN CASE OF BIGGER SPAN IN PROPOSED SPAN, TOE WALL SHALL BE PROVIDED IN FLARED SHAPE TO ALLOW SMOOTH PASSAGE OF RIVER WATER.

ABUTMENT CAP SHALL BE CAST ONLY AFTER COMPLETING THE BACK FILLING WORK UP TO ABUTMENT SHAFT TOP LEVEL.

NOTES:-

1. ALL DIMENSIONS ARE IN MILLIMETER AND LEVELS ARE IN METER UNLESS OTHERWISE SPECIFIED.
2. DIMENSIONS ARE NOT TO BE SCALED ONLY WRITTEN DIMENSIONS SHALL BE FOLLOWED.
3. THE BRIDGE HAS BEEN DESIGNED FOR MOST SEVERE OF:
   (I) ONE LANE OF IRC CLASS 70R LOADING OR TWO LANES OF IRC CLASS A LOADING WHEN FOOTPATHS ARE IN POSITION.
   (ii) ONE LANE OF IRC CLASS 70R LOADING +ONE LANE OF IRC CLASS A LOADING OR 3 LANES OF IRC CLASS A LOADING WHEN FOOTPATHS ARE REMOVED.
   (iii) ONE LANE OF SV LOADING IN ACCORDANCE WITH CLAUSE 204.5 OF IRC–6:2017.
4. MINIMUM CONCRETE COVER, GRADE OF CONCRETE, MINIMUM CEMENT CONTENT & MAXIMUM W/C RATIO SHALL BE AS PER 'MODERATE' CONDITION OF EXPOSURE.
5. CONCRETE SHALL BE DESIGN MIX WITH A MINIMUM 28 DAYS CHARACTERISTIC STRENGTH ON 150MM CUBE AS FOLLOWS:
   a. LEVELING COURSE (UNDER FOUNDATION) – M10
   b. LEVELING COURSE (UNDER APPROACH SLAB) – M15
   c. FOUNDATION – M30
   d. PEDESTAL – M40
   e. SEISMIC STOPPER – M30
   f. SUBSTRUCTURE – M30
   g. PRECAST RCC GIRDER – M35
   h. RETURN/RETAINING WALL – M30
   i. CRASH BARRIER – M40
   j. APPROACH SLAB – M30
6. UNTENSIONED REINFORCEMENT SHALL BE THERMO MECHANICALLY TREATED (TMT), HYSD BARS OF GRADE DESIGNATION FE–500D CONFORMING TO IS: 1786.
7. POT/PTFE BEARINGS SHALL BE DESIGNED AS PER PROVISION OF IRC : 83 (PART–III 2002).
8. STRIP SEAL TYPE EXPANSION JOINTS SHALL BE PROVIDED AS PER PROVISION OF IRC: SP–69–2011.
9. 65MM THICK WEARING COURSE COMPRISING OF 40MM THICK ASPHALTIC CONCRETE OVERLAID WITH 25MM THICK MASTIC ASPHALT SHALL BE PROVIDED AS PER SECTION 500 OF MORT&H SPECIFICATION.
10. 100MM DIA WEEP HOLES AT 1000MM C/C STAGGERED HORIZONTALLY AND VERTICALLY SHALL BE PROVIDED IN ONE OR TWO LAYERS ABOVE G.L IN VERTICAL WALLS OF ABUTMENT, RETURN/RETAINING WALLS AT A SLOPE OF 1 VERTICAL TO 20 HORIZONTAL TOWARDS THE DRAINING FACE.
11. WATER TO BE USED IN CONCRETING AND CURING SHALL CONFIRM TO CLAUSE 18.4.5 OF IRC:112–2011.
12. LAYING, COMPACTION AND EXTENT OF BACKFILL BEHIND ABUTMENTS AND RETURN/RETAINING WALLS SHALL CONSIST OF SELECTED EARTH CONFORMING TO APPENDIX:6 OF IRC:78–2014 HAVING PROPERTIES C=0, ϕ= 35°, Δ=22.5° & γD = 20 KN/M³.
13. MINIMUM CLEAR COVER TO OUTER MOST REINFORCEMENT SHALL BE AS UNDER:–
    a. SUPERSTRUCTURE – 40MM
    b. SUBSTRUCTURE (EARTH FACE) – 75MM
    c. SUBSTRUCTURE (NON EARTH FACE) – 50MM
    d. FOUNDATION – 75MM
14. THE BRIDGE IS DESIGNED FOR PROVISION OF SEISMIC ZONE–V AS PER CLAUSE 219 OF IRC:6:2017.
15. SAFE BEARING CAPACITY CONSIDERED IN DESIGN AT PROPOSED FOUNDING LEVEL IS 50 T/M². THIS SHALL BE ASCERTAINED BEFORE EXECUTION AT SITE BY CONFIRMATORY GEOTECHNICAL INVESTIGATIONS.
16. FILTER MEDIA SHALL BE PROVIDED AS PER APPENDIX–6 OF IRC–78:2014.
17. MINIMUM ANCHORAGE OF FOUNDATION IN SOFT ROCK SHALL BE 1.5M AND 0.6M IN HARD ROCK ANY DEVIATION IN ROCK LEVEL FROM DESIGN SHALL BE REPORTED TO ENGINEER FOR REQUIRED CHANGES IN DESIGN NO CHANGES REQUIRED FOR INCREASE HEIGHT UP TO 50 CM.
18. WHERE FOUNDATIONS ARE PLACED ON ROCK, TRENCHES AROUND THE FOOTING SHALL BE FILLED UP WITH CONCRETE OF M15 GRADE UP TO TOP OF ROCK.
19. THIS DRAWING SHOULD BE READ IN CONJUNCTION WITH RELEVANT HIGHWAY PLAN AND PROFILE DRAWINGS.
20. ALL CHAINAGES, FRL, GL SHALL BE CONFIRMED AT SITE PRIOR TO EXECUTION.
21. FOR APPROACH SLAB, DRAINAGE SPOUTS, CRASH BARRIER, PROTECTION WORK, RETAINING WALL AND MEDIAN WALL DETAILS REFER SEPARATE DRAWINGS.
22. WHEREVER THE COMPONENTS OF EXISTING BRIDGE INTERFERES WITH THE PROPOSED BRIDGE, THAT SHALL BE DISMANTLED UPTO FOUNDATION TOP.
23. MINIMUM LONGITUDINAL GRADIENT OF 0.3% SHALL BE PROVIDED IN PROPOSED BRIDGE TO FACILITATE DRAINAGE OF DECK AS PER CLAUSE 105.3.6 OF IRC–5.
24. SIZE OF EACH INDIVIDUAL STONE PITCHING AND LAUNCHING APRON SHALL NOT BE LESS THAN 30CM IN DIAMETER AND 40KG IN WEIGHT OR AS PER TABLE 5.1 & 5.2 OF IRC:89–1997. WHERE THE REQUIRED SIZE STONES ARE NOT ECONOMICALLY AVAILABLE, STONES IN WIRE CRATES MAY BE USED IN PLACE OF ISOLATED STONES OF EQUIVALENT WEIGHT.

EMPLOYER	PROJECT	DESIGN CONSULTANT					
Government of Nepal Ministry of Physical Infrastructure and Transport, Department of Roads, Foreign Co-operation Branch	Nepal India Regional Trade and Transport Project (NIRTTP) (IDA CREDIT No. 5273 - NEP) Detailed Design of Kathmandu (Nagdhunga) - Naubise - Mugling Road and Bridges	Intercontinental Consultants & Technocrats Pvt.Ltd, A-8, Green Park, New Delhi - 110016 Ph : 4086-3000, Fax 2685-5252 In Joint Venture With Soosung Engineering Co. Ltd., South Korea	In Association With Full Bright Consultancy (Pvt.) Ltd. 316,Baburam Acharya Sadak, Sinamangal, Kathmandu, GPO Box: 4970, Kathmandu, Nepal	Prepared By		M.L.GUPTA	DRAWING TITLE: GENERAL ARRANGEMENT DRAWING FOR MINOR BRIDGE AT CH: 5+145KM OVER SOPYANG KHOLA (1x22.0m) PACKAGE-II (NAUBISE-GALCHI)	Scale: As Shown	Date: JUNE-2018
				Designed By		V.CHAUDHARY			
				Checked By		P.K.KHAN			
				Approved By		B.N.SINGH	Drawing No.: NIRTTP/NAG-MUG/SOPYANG/GAD		(SHEET 2 OF 2)

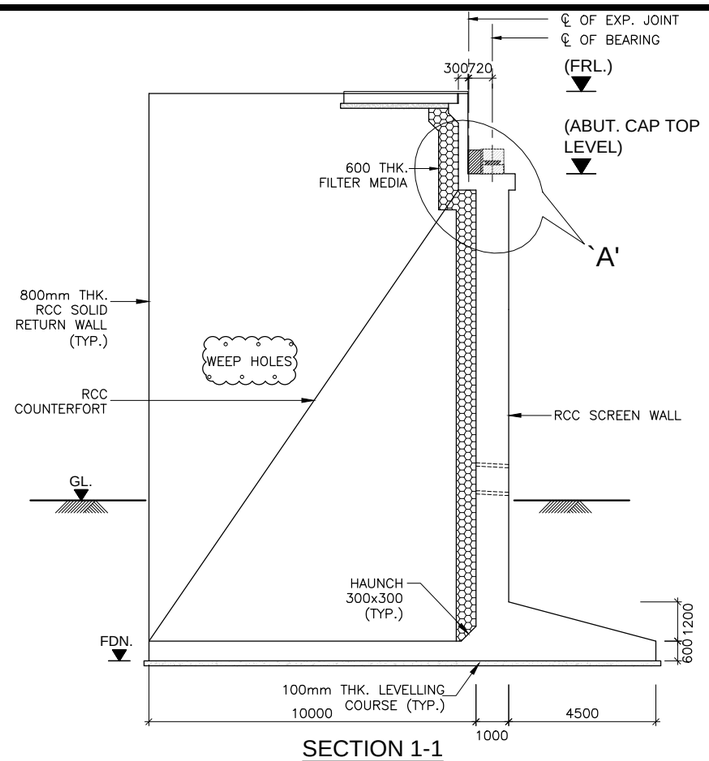

SECTION 1-1

(SCALE 1:125)

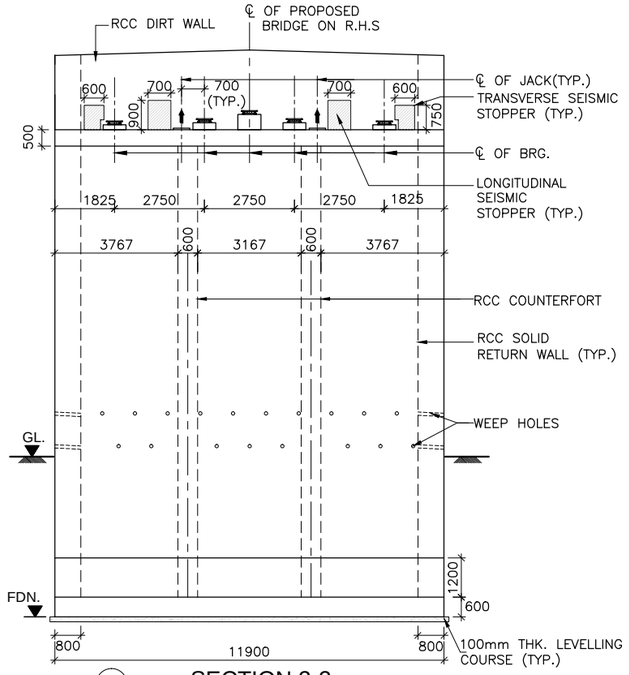

SECTION 2-2

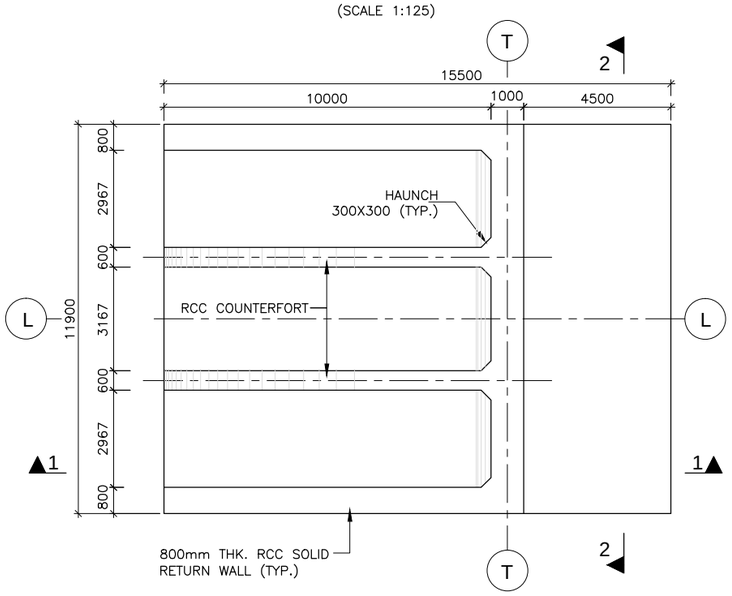

PLAN AT FOOTING

(SCALE 1:125)

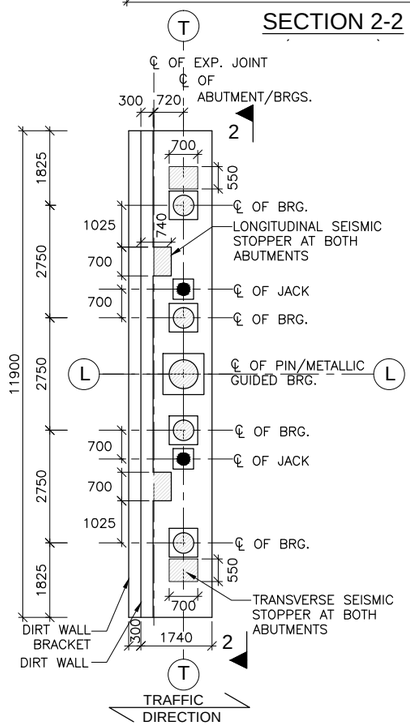

PLAN AT ABUTMENT CAP LEVEL

(SCALE 1:100)

NOTES :-

1. ALL DIMENSIONS ARE IN MM, UNLESS OTHERWISE MENTIONED.
2. ONLY WRITTEN DIMENSIONS ARE TO BE FOLLOWED AND NO DIMENSION SHALL BE SCALED.
3. CONCRETE SHALL BE DESIGN MIX WITH A MINIMUM 28 DAYS CHARACTERISTIC STRENGTH ON 150mm CUBE AS FOLLOWS:
   a. LEVELING COURSE (UNDER FOUNDATION) – 10MPa
   b. LEVELING COURSE (UNDER APPROACH SLAB) – 15MPa
   c. FOUNDATION – 30MPa
   d. SUBSTRUCTURE – 30MPa
   e. APPROACH SLAB – 30MPa
   f. PEDESTAL – 40MPa
   g. SEISMIC STOPPER – 30MPa
4. UNTENSIONED REINFORCEMENT SHALL BE THERMO MECHANICALLY TREATED (TMT), HYSD BARS OF GRADE DESIGNATION Fe–500D CONFORMING TO IS: 1786.
5. MINIMUM CLEAR COVER TO OUTER MOST REINFORCEMENT SHALL BE AS UNDER
   a. SUBSTRUCTURE (EARTH FACE) – 75MM
   b. SUBSTRUCTURE (NON EARTH FACE) – 50MM
   c. FOUNDATION – 75MM
6. LL REPRESENTS LONGITUDINAL AXIS OF BRIDGE AND TT REPRESENTS TRANSVERSE AXIS OF ABUTMENT/FOUNDATION.
7. SAFE BEARING CAPACITY AT THE PROPOSED FOUNDING LEVEL HAS BEEN CONSIDERED AS 63 T/M^2 ON THE BASIS OF SUB SURFACE EXPLORATION RESULTS. THIS SHALL GOT CONFIRMED BEFORE EXECUTION.
8. THE LOCATION OF JACKS FOR LIFTING UP THE SUPERSTRUCTURE SHALL BE DISTINCTLY ETCHED ON SOFFIT OF SUPERSTRUCTURE AND ON TOP OF ABUTMENT CAP.
9. THIS DRAWING SHALL BE READ IN CONJUNCTION WITH THE FOLLOWING DRGS.
   - GENERAL ARRANGEMENT DRAWING REFER:
     –NIRTTP/NAG–MUG/SOPYANG/GAD
   - REINFORCEMENT DETAILS OF COUNTER FORT TYPE ABUTMENT & ITS COMPONENTS, DIRT WALL, RETURN WALL, PEDESTAL AND SEISMIC STOPPER REFER:
     –NIRTTP/NAG–MUG/SOPYANG/SUB–02(SHEET 1 TO 3)

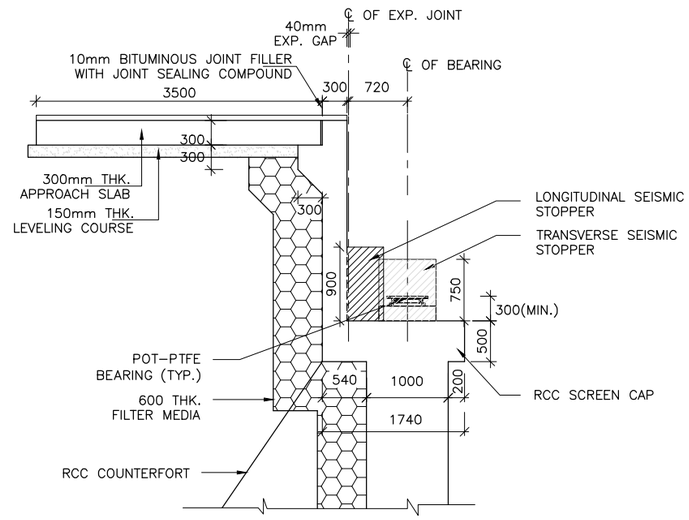

DETAIL-`A'

(SCALE 1:50)

LEGEND:-

- – BEARING LOCATION IN PLAN
- – JACK LOCATION IN PLAN
- – JACK LOCATION IN ELEVATION

LEVEL SCHEDULE AT ABUTMENT

MARK	F.R.L(m)	ABUTMENT CAP TOP LVL. (m)		GR. LEVEL(m)		FDN. LEVEL (m)
		A1	A2	A1	A2	
ABUTMENT	742.000	739.511	739.511	735.811	735.380	726.750

EMPLOYER	PROJECT	DESIGN CONSULTANT				
Government of Nepal Ministry of Physical Infrastructure and Transport, Department of Roads, Foreign Co-operation Branch	Nepal India Regional Trade and Transport Project (NIRTTP) (IDA CREDIT No. 5273 - NEP) Detailed Design of Kathmandu (Nagdhunga) - Naubise - Mugling Road and Bridges	Intercontinental Consultants & Technocrats Pvt.Ltd, A-8, Green Park, New Delhi - 110016 Ph : 4086-3000, Fax 2685-5252 In Joint Venture With Soosung Engineering Co. Ltd., South Korea	In Association With Full Bright Consultancy (Pvt.) Ltd. 316,Baburam Acharya Sadak, Sinamangal, Kathmandu, GPO Box: 4970, Kathmandu, Nepal	Prepared By: M.L.GUPTA Designed By: V.CHAUDHARY Checked By: P.K.KHAN Approved By: B.N.SINGH	DRAWING TITLE: DIMENSIONAL DETAILS OF COUNTERFORT TYPE ABUTMENT & ITS COMPONENTS, DIRT WALL, RETURN WALL, PEDESTAL ANS SEISMIC ARRESTER MINOR BRIDGE AT CH:- 5+145 OVER SOPYANG KHOLA (1x22.00m) PACKAGE-I (NAGDHUNGA-NAUBISE) Drawing No.: NIRTTP/NAG-MUG/ SOPYANG/SUB-01	Scale: As Shown Date: JUNE-2018

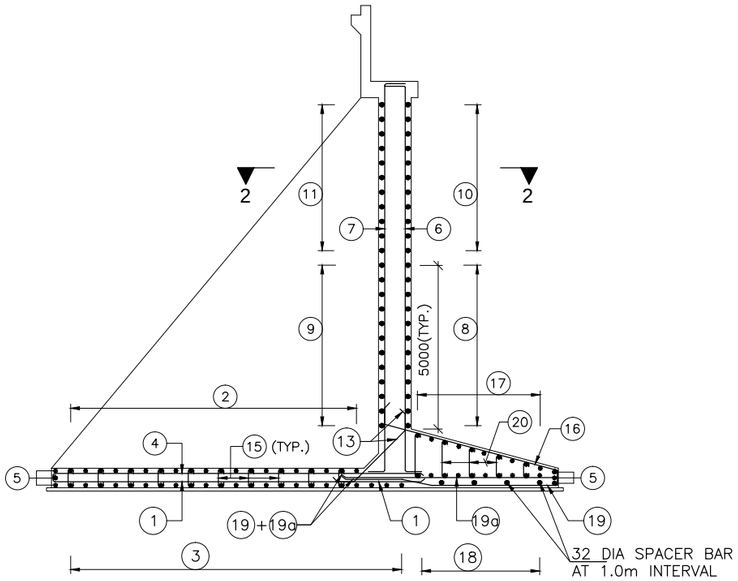

SECTION 1-1 OF SCREEN WALL & FOOTING
(SCALE 1:125)

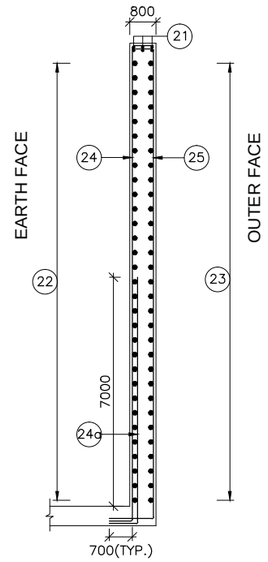

SECTION 3-3
(SCALE 1:125)

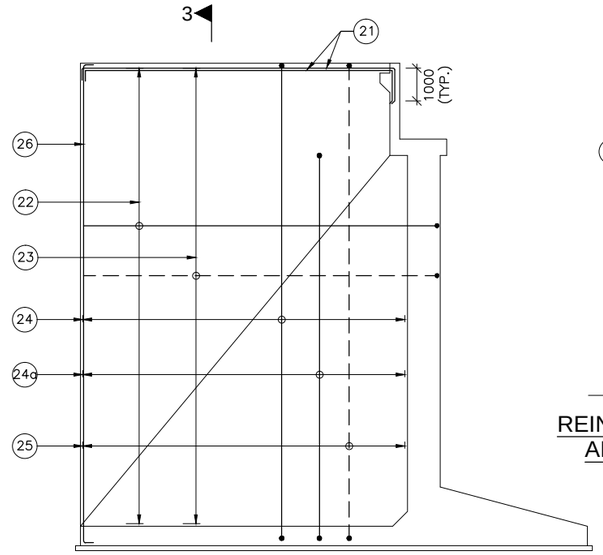

REINFORCEMENT DETAILS OF RETURN WALL
(SCALE 1:125)

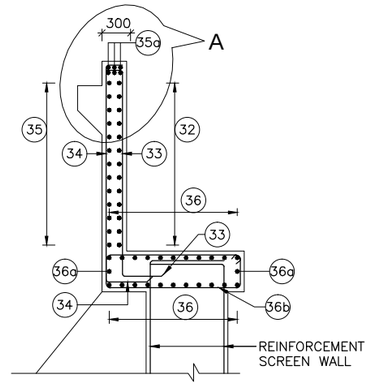

REINF. DETAILS OF DIRT WALL
AND RCC ABUTMENT CAP
(SCALE 1:50)

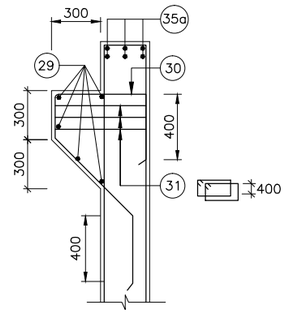

DETAIL `A'
(SCALE 1:25)

LEGEND

TOP REINFORCEMENT BARS ————————

BOTTOM REINFORCEMENT BARS — — — — —

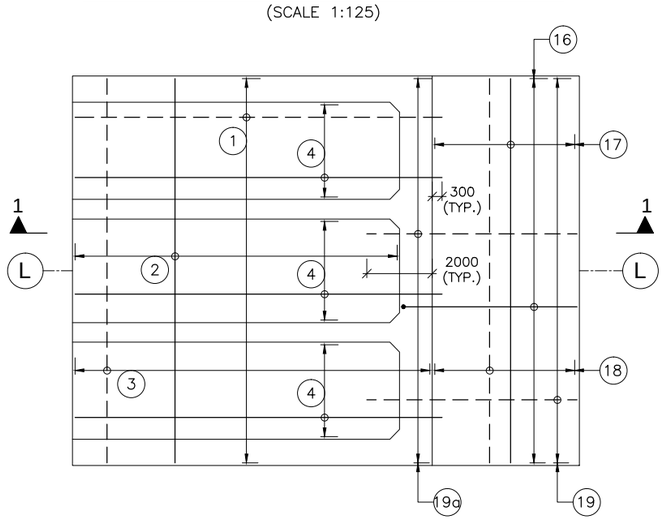

PLAN AT FOUNDATION LEVEL
(SCALE 1:125)

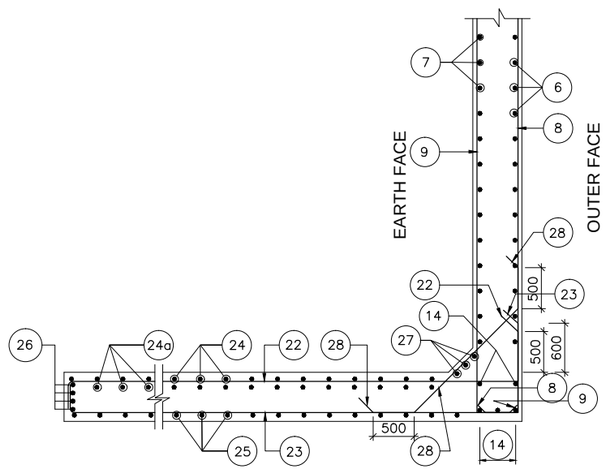

JUNCTION DETAILS OF RCC SCREEN WALL
AND RCC SOLID RETURN WALL
(SCALE: 1:50)

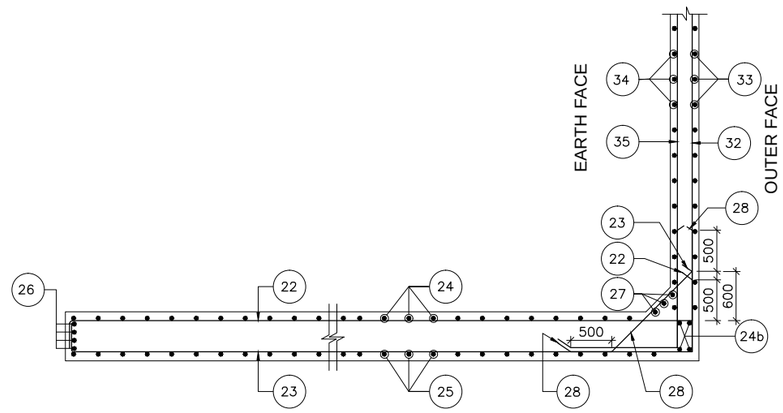

JUNCTION DETAILS OF RCC SOLID RETURN
WALL & DIRT WALL
(SCALE: 1:50)

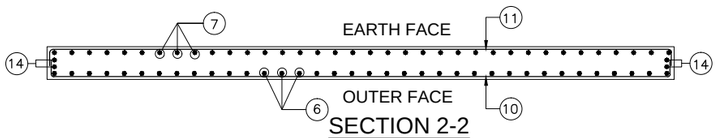

SECTION 2-2
(SCALE 1:75)

EMPLOYER	PROJECT	DESIGN CONSULTANT					
Government of Nepal Ministry of Physical Infrastructure and Transport, Department of Roads, Foreign Co-operation Branch	Nepal India Regional Trade and Transport Project (NIRTTP) (IDA CREDIT No. 5273 - NEP) Detailed Design of Kathmandu (Nagdhunga) - Naubise - Mugling Road and Bridges	Intercontinental Consultants & Technocrats Pvt.Ltd, A-8, Green Park, New Delhi - 110016 Ph : 4086-3000, Fax 2685-5252 In Joint Venture With Soosung Engineering Co. Ltd., South Korea	In Association With Full Bright Consultancy (Pvt.) Ltd. 316,Baburam Acharya Sadak, Sinamangal, Kathmandu, GPO Box: 4970, Kathmandu, Nepal	Prepared By	M.L.GUPTA	DRAWING TITLE: REINFORCEMENT DETAILS OF COUNTER FORT TYPE ABUTMENT & ITS COMPONENTS, DIRT WALL, RETURN WALL, PEDESTAL AND SEISMIC STOPPER FOR MINOR BRIDGE AT CH:- 5+145 OVER SOPYANG KHOLA (1x22.00m) PACKAGE-I (NAGDHUNGA-NAUBISE)	Scale: As Shown	Date: JUNE-2018 (SHEET 1 OF 3)
				Designed By	V.CHAUDHARY		
				Checked By	P.K.KHAN		
				Approved By	B.N.SINGH	Drawing No.: NIRTTP/NAG-MUG/SOPYANG/SUB-02	

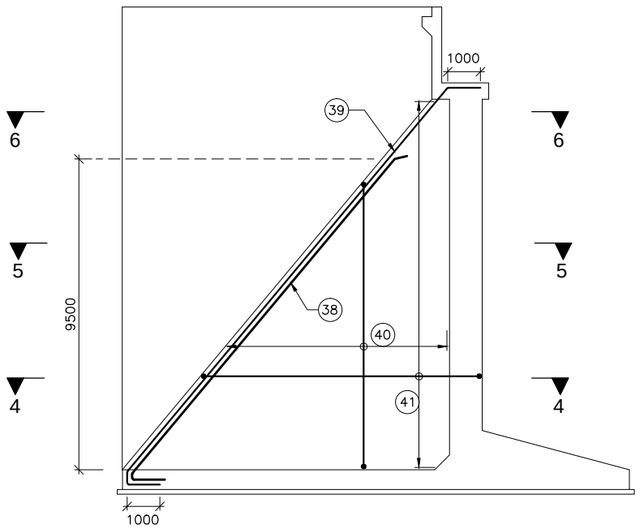

REINFORCEMENT DETAILS OF RCC COUNTERFORT

(SCALE 1:125)

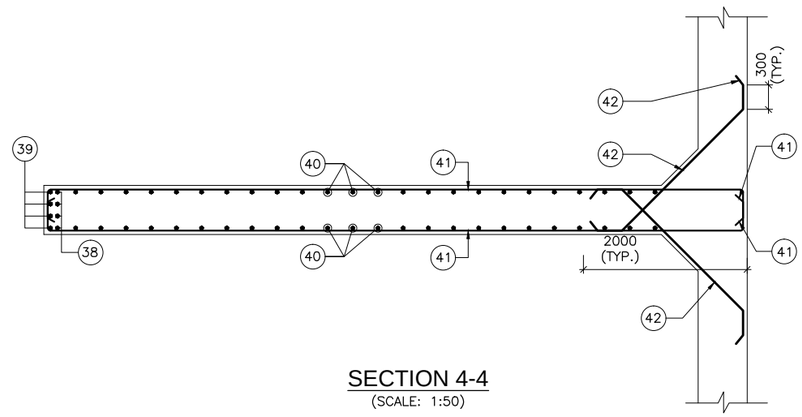

SECTION 4-4

(SCALE: 1:50)

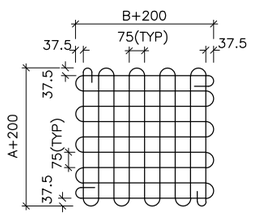

DETAIL OF MESH

TYPE "M1" 8 ϕ

(IN PEDESTAL) (IN TWO LAYERS)

(SCALE 1:20)

(WHERE A & B SIZE OF BEARING)

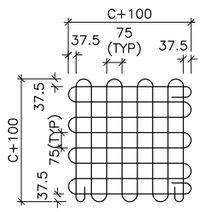

DETAIL OF MESH

TYPE "M2" 8 ϕ

(UNDER JACK LOCATION)

(IN TWO LAYERS)

(SCALE 1:20)

(WHERE C= DIA OF JACK)

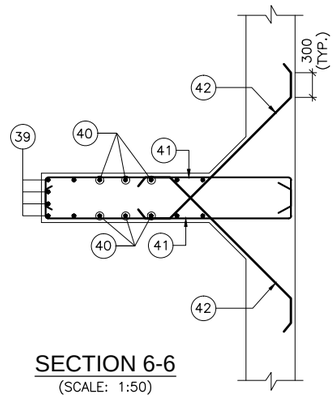

SECTION 6-6

(SCALE: 1:50)

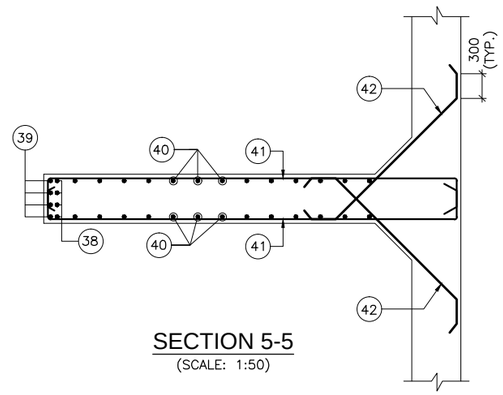

SECTION 5-5

(SCALE: 1:50)

LEGEND

TOP REINFORCEMENT BARS ————————

BOTTOM REINFORCEMENT BARS — — — — —

EMPLOYER	PROJECT	DESIGN CONSULTANT					
Government of Nepal Ministry of Physical Infrastructure and Transport, Department of Roads, Foreign Co-operation Branch	Nepal India Regional Trade and Transport Project (NIRTTP) (IDA CREDIT No. 5273 - NEP) Detailed Design of Kathmandu (Nagdhunga) - Naubise - Mugling Road and Bridges	Intercontinental Consultants & Technocrats Pvt.Ltd, A-8, Green Park, New Delhi - 110016 Ph : 4086-3000, Fax 2685-5252 In Joint Venture With Soosung Engineering Co. Ltd., South Korea	In Association With Full Bright Consultancy (Pvt.) Ltd. 316,Baburam Acharya Sadak, Sinamangal, Kathmandu, GPO Box: 4970, Kathmandu, Nepal	Prepared By	M.L.GUPTA	DRAWING TITLE: REINFORCEMENT DETAILS OF COUNTER FORT TYPE ABUTMENT & ITS COMPONENTS, DIRT WALL, RETURN WALL, PEDESTAL AND SEISMIC STOPPER FOR MINOR BRIDGE AT CH:- 5+145 OVER SOPYANG KHOLA (1x22.00m) PACKAGE-I (NAGDHUNGA-NAUBISE)	Scale: As Shown	Date: JUNE-2018 (SHEET 2 OF 3)
				Designed By	V.CHAUDHARY			
				Checked By	P.K.KHAN			
				Approved By	B.N.SINGH	Drawing No.: NIRTTP/NAG-MUG/SOPYANG/SUB-02		

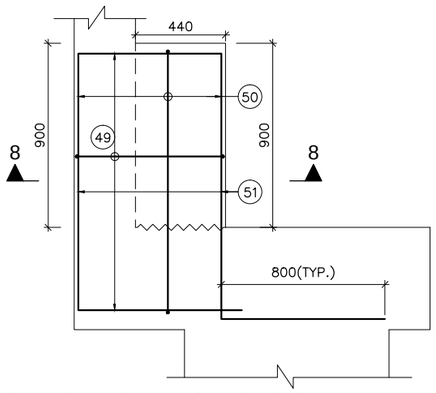

REINF. DETAILS OFLONGITUDINAL SEISMICSTOPPER

(DIRT WALL REINFORCEMENT NOT SHWON FOR CLARITY)
(SCALE 1:20)

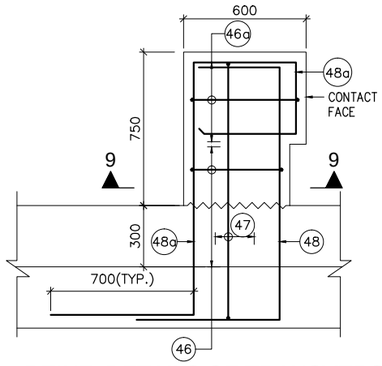

REINF. DETAILS OF TRANSVERSE SEISMIC STOPPER

(SCALE 1:20)

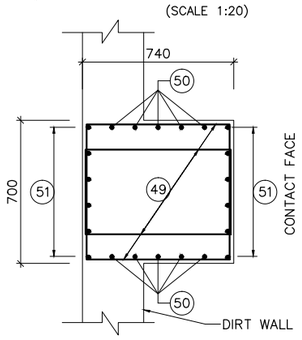

SECTION 8-8

(SCALE 1:20)
WHERE, A/B SIZE OF BEARING

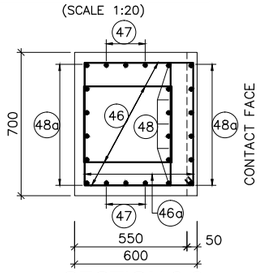

SECTION 9-9

(SCALE 1:20)

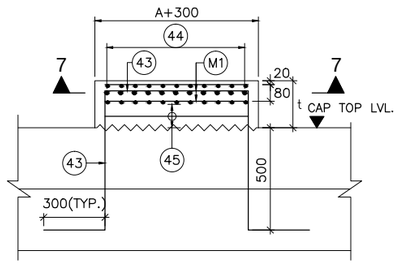

REINF. DETAILS OF PEDESTAL

(SCALE 1:20)
WHERE, A SIZE OF BEARING
AND t IS HEIGHT OF PEDESTAL

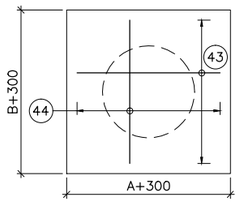

SECTION 7-7

(SCALE 1:20)
WHERE, A/B SIZE OF BEARING

BRACKET	29	12 ϕ –5 Nos.	
	30	12 ϕ @150 C/C	
	31	2L–10 ϕ STIRRUPS @ 300 C/C (3 LAYERS)	400
DIRT WALL	32	12 ϕ @150 C/C	
	33	12 ϕ @150 C/C	
	34	12 ϕ @150 C/C	
	35	20 ϕ @150 C/C	
	35a	20 ϕ –3 Nos. (2 LAYERS)	
SCREEN CAP	36	16 ϕ @150 C/C	
	36a	12 ϕ @150 C/C	
	36b	16 ϕ @150 C/C	
COUNTERFORT	37	NOT IN USED	
	38	32 ϕ –4 Nos.	
	39	32 ϕ –4 Nos.	
	40	16 ϕ @150 C/C	
	41	16 ϕ @150 C/C	
	42	16 ϕ @150 C/C	
RCC PEDESTAL	43	12 ϕ @ 75c/c	
	44	12 ϕ @ 75c/c	
	45	2L–12ϕ@ 150c/c	STRPS.
TRANSVERSE SEISMIC STOPPER	46	4L–12ϕ@ 125c/c	STRPS.
	46a	2L–12ϕ@ 125c/c	STRPS.
	47	16 ϕ –3 Nos.	BOTH FACES
	48	32 ϕ –6 Nos.	BOTH FACES
	48a	25 ϕ –6 Nos.	BOTH FACES
LONG. SEISMIC STOPPER	49	4L–12ϕ@ 150c/c	STRPS.
	50	16 ϕ –5 Nos.	BOTH FACES
	51	32 ϕ –6 Nos.	BOTH FACES

REINFORCEMENT SCHEDULE

	MARKS	DESCRIPTION	SHAPE
FOOTING & SCREEN WALL	1	16 ϕ @150 C/C	
	2	16 ϕ @150 C/C	
	3	16 ϕ @150 C/C	
	4	12 ϕ @150 C/C	
	5	12 ϕ @150 C/C	
	6	16 ϕ @150 C/C	
	7	16 ϕ @150 C/C	
	8	16 ϕ @150 C/C	
	9	12 ϕ @150 C/C	
	10	12 ϕ @150 C/C	
	11	12 ϕ @150 C/C	
	12	10 ϕ –2 Nos.	
	13	12 ϕ @150 C/C	
	14	12 ϕ –5 Nos.(ON EACH FACE)	
	15	12 ϕ @150 C/C (LINK BAR)	
FOOTING (TOE SIDE)	16	16 ϕ @150 C/C	
	17	2L–16 ϕ @150 C/C	
	18	25 ϕ @150 C/C	
	19	32 ϕ @150 C/C	
	19a	32 ϕ @150 C/C	
	20	5L12 ϕ @300 C/C	
RETURN WALL	21	25 ϕ –3 Nos. (2 LAYERS)	
	22	32 ϕ @150 C/C	
	23	16 ϕ @150 C/C	
	24	32 ϕ @150 C/C	
	24a	32 ϕ @150 C/C	
	24b	12 ϕ –4 Nos.	
	25	16 ϕ @150 C/C	
	26	20 ϕ –4 Nos.	
	27	12 ϕ –3 Nos.	
	28	12 ϕ @150 C/C	

NOTES :-

1. ALL DIMENSIONS ARE IN MM, UNLESS OTHERWISE MENTIONED.
2. ONLY WRITTEN DIMENSIONS ARE TO BE FOLLOWED AND NO DIMENSION SHALL BE SCALED.
3. CONCRETE SHALL BE DESIGN MIX WITH A MINIMUM 28 DAYS CHARACTERISTIC STRENGTH ON 150MM CUBE AS FOLLOWS:
   a. LEVELING COURSE (UNDER FOUNDATION) – 10MPa
   b. LEVELING COURSE (UNDER APPROACH SLAB) – 15MPa
   c. FOUNDATION – 30MPa
   d. SUBSTRUCTURE – 30MPa
   e. APPROACH SLAB – 30MPa
   f. PEDESTAL – 30MPa
   g. SEISMIC STOPPER – 30MPa
4. UNTENSIONED REINFORCEMENT SHALL BE THERMO MECHANICALLY TREATED (TMT), HYSD BARS OF GRADE DESIGNATION Fe–500D CONFORMING TO IS: 1786.
5. MINIMUM CLEAR COVER TO OUTER MOST REINFORCEMENT SHALL BE AS UNDER:–
   a. SUBSTRUCTURE (EARTH FACE) – 75MM
   b. SUBSTRUCTURE (NON EARTH FACE) – 50MM
   c. FOUNDATION – 75MM
6. LL REPRESENTS LONGITUDINAL AXIS OF BRIDGE AND TT REPRESENTS TRANSVERSE AXIS OF ABUTMENT/FOUNDATION.
7. MINIMUM ANCHORAGE LENGTH OF REINFORCEMENT FOR FAVOURABLE CONDITION SHALL BE AS UNDER:
   CONCRETE GRADE – M–30 – 40 x DIA OF BAR
   CONCRETE GRADE – M–40 – 34 x DIA OF BAR
   (WHERE DIA OF BAR < = 32MM.)
   FOR UNFAVOURABLE CONDITION THESE VALUES SHALL BE MULTIPLIED BY 1.43.
8. MINIMUM LAP LENGTH OF REINFORCEMENT FOR FAVOURABLE CONDITION SHALL BE AS UNDER:
   CONCRETE GRADE – M–30 – 56 x DIA OF BAR
   CONCRETE GRADE – M–40 – 48 x DIA OF BAR
9. THIS DRAWING SHALL BE READ IN CONJUNCTION WITH THE FOLLOWING DRGS.
   - GENERAL ARRANGEMENT DRAWING REFER DRG. NO. : NIRTTP/NAG–MUG/SOPYANG/GAD
   - DIMENSIONAL DETAILS OF COUNTER FORT TYPE ABUTMENT & ITS COMPONENTS REFER DRG. NO. : NIRTTP/NAG–MUG/SOPYANG/SUB–01

LEGEND

TOP REINFORCEMENT BARS ————————
BOTTOM REINFORCEMENT BARS — — — — —

EMPLOYER	PROJECT	DESIGN CONSULTANT
Government of Nepal Ministry of Physical Infrastructure and Transport, Department of Roads, Foreign Co-operation Branch	Nepal India Regional Trade and Transport Project (NIRTTP) (IDA CREDIT No. 5273 - NEP) Detailed Design of Kathmandu (Nagdhunga) - Naubise - Mugling Road and Bridges	Intercontinental Consultants & Technocrats Pvt.Ltd, A-8, Green Park, New Delhi - 110016 Ph : 4086-3000, Fax 2685-5252 In Joint Venture With Soosung Engineering Co. Ltd., South Korea In Association With Full Bright Consultancy (Pvt.) Ltd. 316,Baburam Acharya Sadak, Sinamangal, Kathmandu, GPO Box: 4970, Kathmandu, Nepal

Prepared By		M.L.GUPTA
Designed By		V.CHAUDHARY
Checked By		P.K.KHAN
Approved By		B.N.SINGH

DRAWING TITLE:
REINFORCEMENT DETAILS OF COUNTER FORT TYPE ABUTMENT & ITS COMPONENTS, DIRT WALL, RETURN WALL, PEDESTAL AND SEISMIC STOPPER FOR MINOR BRIDGE AT CH:- 5+145 OVER SOPYANG KHOLA (1x22.00m)
PACKAGE-I (NAGDHUNGA-NAUBISE)

Drawing No.:
NIRTTP/NAG-MUG/SOPYANG/SUB-02

Scale: As Shown

Date: JUNE-2018

(SHEET 3 OF 3)

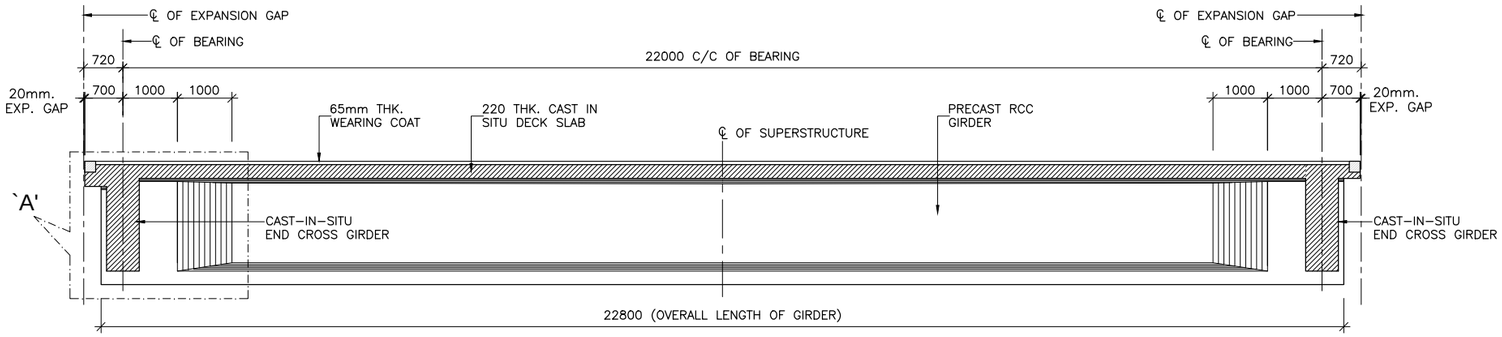

SECTIONAL ELEVATION 1 - 1

(SCALE 1:75)

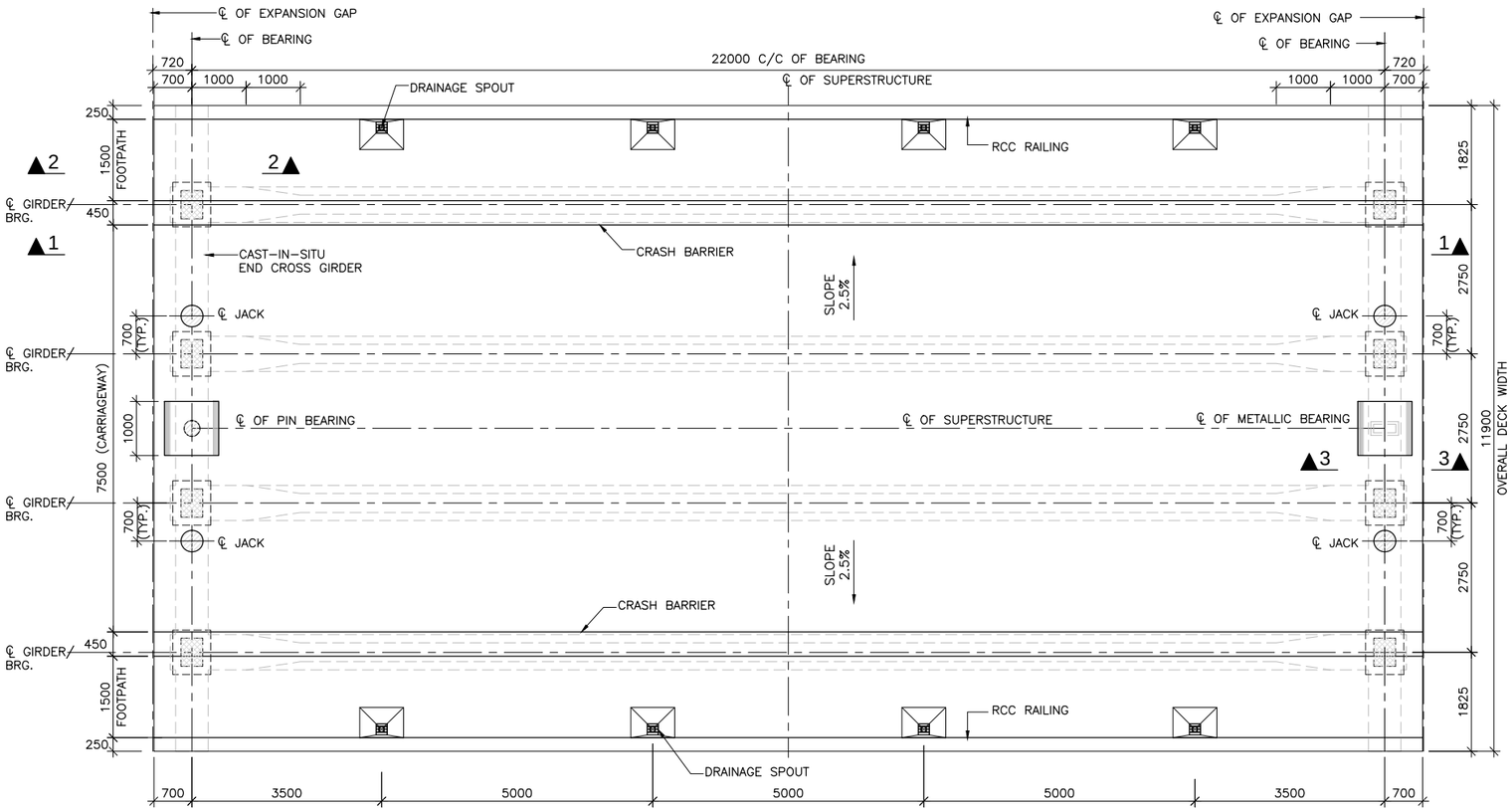

TOP PLAN OF DECK SLAB

(SCALE 1:75)

LEGEND:-

- CAST-IN-SITU PORTION
- JACK LOCATION IN PLAN
- JACK LOCATION IN ELEVATION

NOTES:-

1. ALL DIMENSIONS ARE IN mm UNLESS OTHERWISE MENTIONED. ONLY WRITTEN DIMENSIONS ARE TO BE FOLLOWED. NO DIMENSIONS SHALL BE SCALED.
2. THE BRIDGE HAS BEEN DESIGNED FOR TWO LANE TRAFFIC FOR LIVE LOAD COMBINATIONS OF CLASS A AND 70R WITH FOOTPATH LIVE LOAD. OR IRC SV VEHICLE WITH FOOTPATH LIVE LOAD. OR THREE LANE TRAFFIC FOR LIVE LOAD COMBINATIONS OF CLASS A AND 70R WITHOUT FOOTPATH LIVE LOAD AS PER IRC:6-2017, WHICHEVER GOVERNS.
3. CONCRETE SHALL BE DESIGN MIX WITH A MINIMUM 28 DAYS CHARACTERISTIC STRENGTH ON 150mm CUBES AS FOLLOWS :-
   PRECAST RCC GIRDER + RCC CAST IN SITU DECK SLAB-35 MPa
4. THE REINFORCING BARS SHALL BE OF THERMO MECHANICALLY TREATED / CORROSION RESISTANT STEEL (TMT-CRS) (GRADE DESIGNATION Fe-500D) CONFORMING TO IS:1786 STANDARDS.
5. CLEAR COVER TO OUTER MOST STEEL SHALL BE AS UNDER:-
   FOR SUPER STRUCTURE-40mm.
6. 65mm. THK. WEARING COURSE COMPRISING OF 40mm THK. BITUMINOUS CONCRETE OVER LAID WITH 25mm THK. MASTIC ASPHALT SHALL BE PROVIDED AS PER SECTION 500 OF MORTH SPECIFICATIONS.
7. FOR LIFTING OF THE SUPERSTRUCTURE 2Nos. OF FREYSSINET JACKS OF CAPACITY **135t** EACH MAY BE REQUIRED AT EACH END. THE LOCATION OF JACKS FOR LIFTING OF THE SUPERSTRUCTURES TO REPLACE BEARINGS ETC. IS SHOWN ↑ THUS THIS SHALL BE DISTINCTLY ETCHED FOR EASY IDENTIFICATION ON THE ABUTMENT CAPS
8. DURING THE LIFTING OPERATION OF SUPERSTRUCTURE ALL THE JACKS PLACED UNDER THE END DIAPHRAGM IN LINE WITH THE BEARINGS SHALL BE OPERATED SIMULTANEOUSLY USING SINGLE OPERATING CONSOLE, GROUPING THE PUMP AND CONTROL SYSTEM SO AS TO ENSURE THAT THE REACTIONS ON ALL THE JACKS ARE EQUAL AT ALL TIMES.
9. PRECAST GIRDERS SHALL BE CAST IN ONE CONCRETING OPERATION IN CASTING YARD WITHOUT ANY CONSTRUCTION JOINT.
10. EACH PRECAST GIRDER WILL BE LIFTED BY USING LIFTING STRANDS AT EITHER END. DURING LIFTING, GIRDER SHALL BE KEPT PLUMB AND UPRIGHT SELF WEIGHT OF GIRDER IS **545kN.**

SEQUENCE OF CONSTRUCTION:-

AGE OF GIRDER (IN DAYS)	ACTIVITY	STRENGTH OF CONC. (IN MPa)
0	CASTING OF LONGITUDINAL GIRDER AT CASTING YARD WITH PORTION OF DIAPHRAGM	–
14 to 28	POSITION OF LONGITUDINAL GIRDER ON TEMPORARY BRGS. AND HOLD THEM IN POSITION BY LATERAL BRACING. REINF. OF DECK SLAB & END DIAPHRAGM WILL BE FIXED IN POSITION	30
28	CASTING OF DECK SLAB ALONG WITH CROSS GIRDER	35
28 to 42	AVERAGE AGE OF GIRDER WHEN COMPOSITE ACTION TAKES PLACE	35
42 to 56	FIXING THE CRASH BARRIER AND LAYING OFWEARING COAT	35
56	AVERAGE AGE OF GIRDER WHEN SILD & CWLL ON IT	35

REFERENCE DRAWINGS:-

1. REINFORCEMENT DETAILS OF LONGITUDINAL GIRDER:
   -NIRTTP/NAG-MUG/SOPYANG/RCC-G/22m/02
2. REINFORCEMENT DETAILS OF END CROSS GIRDER:
   -NIRTTP/NAG-MUG/SOPYANG/RCC-G/22m/03
3. REINFORCEMENT DETAILS OF RCC DECK SLAB:
   -NIRTTP/NAG-MUG/SOPYANG/RCC-G/22m/04(SHEET 1&2)
4. DETAILS OF LOAD AND FORCES FOR POT/PTFE BEARINGS:
   -NIRTTP/NAG-MUG/SOPYANG/RCC-G/22m/05

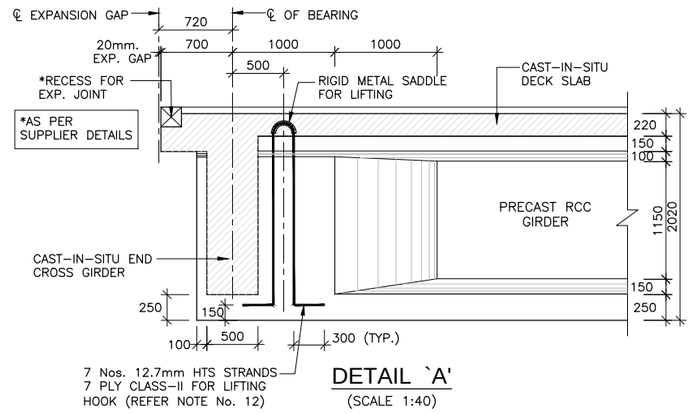

DETAIL `A'

(SCALE 1:40)

EMPLOYER	PROJECT	DESIGN CONSULTANT					
Government of Nepal Ministry of Physical Infrastructure and Transport, Department of Roads, Foreign Co-operation Branch	Nepal India Regional Trade and Transport Project (NIRTTP) (IDA CREDIT No. 5273 - NEP) Detailed Design of Kathmandu (Nagdhunga) - Naubise - Mugling Road and Bridges	Intercontinental Consultants & Technocrats Pvt.Ltd, A-8, Green Park, New Delhi - 110016 Ph : 4086-3000, Fax 2685-5252 In Joint Venture With Soosung Engineering Co. Ltd., South Korea	In Association With Full Bright Consultancy (Pvt.) Ltd. 316,Baburam Acharya Sadak, Sinamangal, Kathmandu, GPO Box: 4970, Kathmandu, Nepal	Prepared By		K.M.JOHRI	DRAWING TITLE: DIMENSION DETAILS OF PRECAST RCC GIRDER & CAST-IN-SITU SLAB SUPERSTRUCTURE EFFECTIVE SPAN : 22.00m Drawing No.: NIRTTP/NAG-MUG/SOPYANG/RCC-G/22m/01
				Designed By		V.CHAUDHARY	
				Checked By		P.K.KHAN	
				Approved By		B.N.SINGH	

Scale: As Shown

Date: JUNE-2018

(SHEET 1 OF 2)

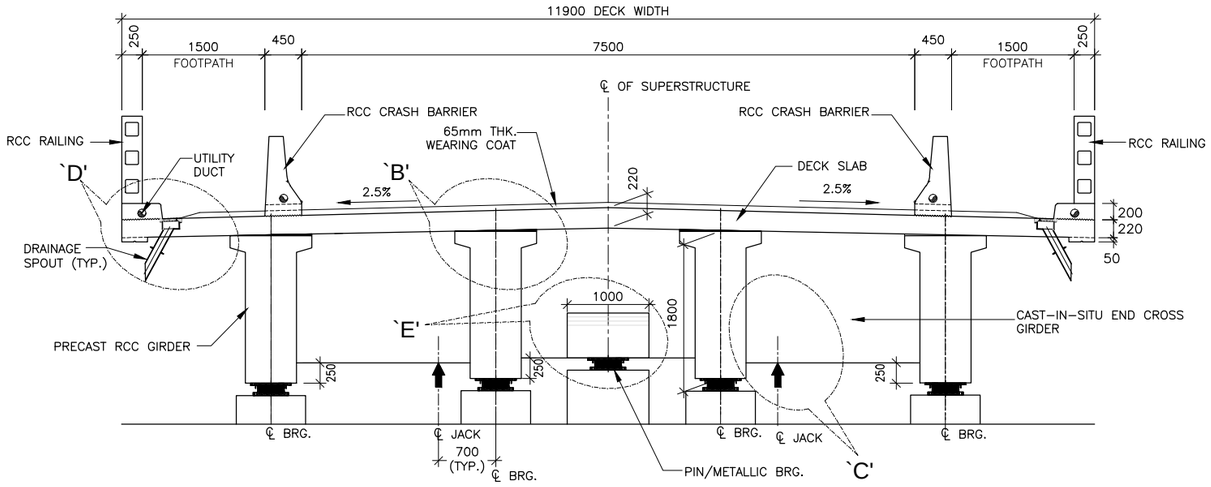

SECTION AT SUPPORT
(SCALE 1:50)

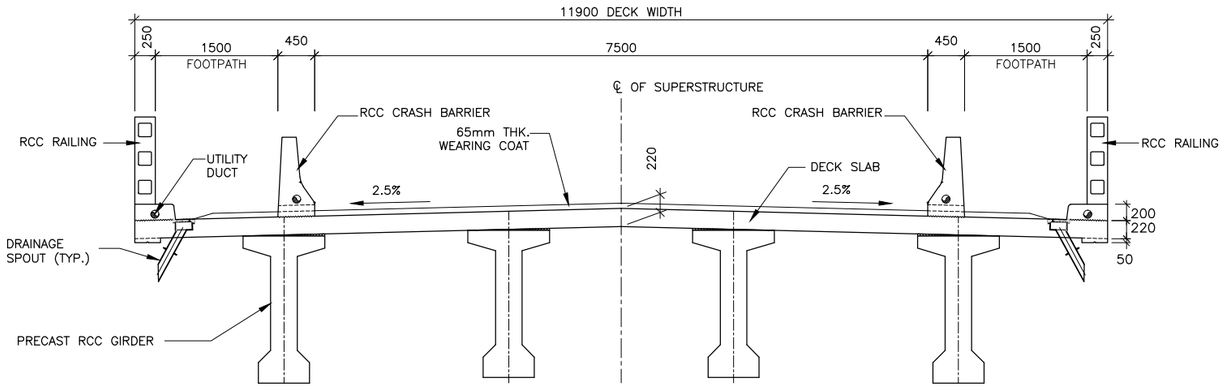

SECTION AT MID
(SCALE 1:50)

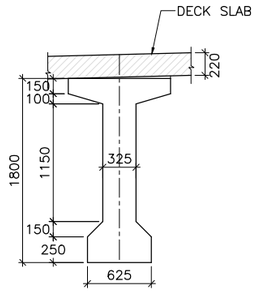

AT MID SPAN
(SCALE 1:40)

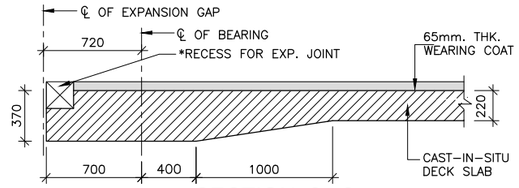

SECTION 2 - 2
(SCALE 1:30)

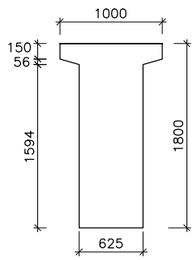

AT SUPPORT

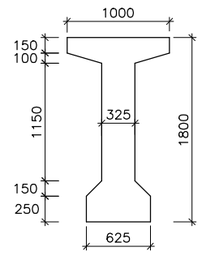

AT MID SPAN

DETAILS OF PRECAST
RCC GIRDER
(SCALE 1:40)

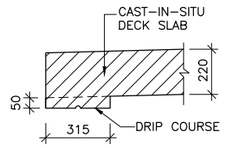

DETAIL - `D'
(SCALE 1:20)

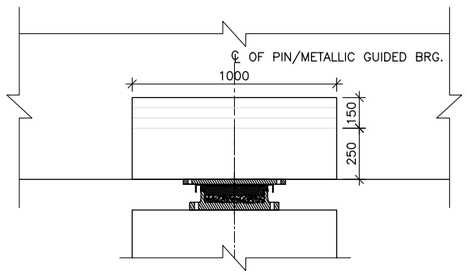

DETAIL - `E'
(SCALE 1:20)

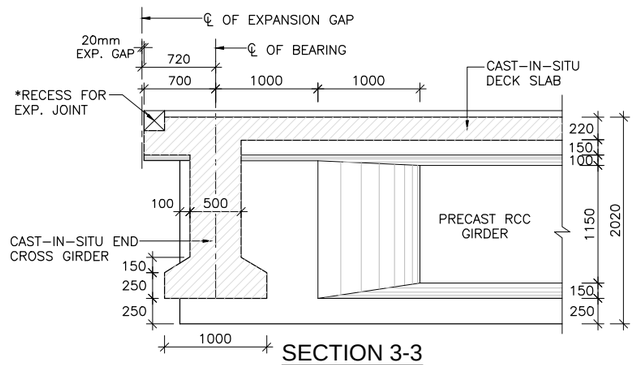

SECTION 3-3
(SCALE 1:40)

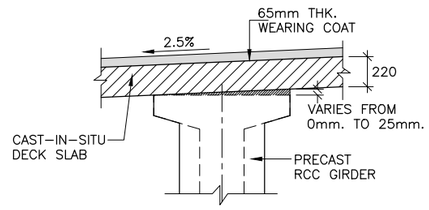

DETAIL -`B'
(SCALE 1:30)

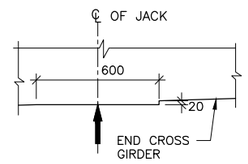

DETAIL - `C'
DETAIL OF CROSS GIRDER AT JACK LOCATION
(SCALE 1:20)

EMPLOYER	PROJECT	DESIGN CONSULTANT						
Government of Nepal Ministry of Physical Infrastructure and Transport, Department of Roads, Foreign Co-operation Branch	Nepal India Regional Trade and Transport Project (NIRTTP) (IDA CREDIT No. 5273 - NEP) Detailed Design of Kathmandu (Nagdhunga) - Naubise - Mugling Road and Bridges	Intercontinental Consultants & Technocrats Pvt.Ltd, A-8, Green Park, New Delhi - 110016 Ph : 4086-3000, Fax 2685-5252 In Joint Venture With Soosung Engineering Co. Ltd., South Korea	In Association With Full Bright Consultancy (Pvt.) Ltd. 316,Baburam Acharya Sadak, Sinamangal, Kathmandu, GPO Box: 4970, Kathmandu, Nepal	Prepared By		K.M.JOHRI	DRAWING TITLE: DIMENSION DETAILS OF PRECAST RCC GIRDER & CAST-IN-SITU SLAB SUPERSTRUCTURE EFFECTIVE SPAN : 22.00m	Scale:	Date: JUNE-2018
				Designed By		V.CHAUDHARY		As Shown	
				Checked By		P.K.KHAN	Drawing No.: NIRTTP/NAG-MUG/SOPYANG/RCC-G/22m/01		(SHEET 2 OF 2)
				Approved By		B.N.SINGH			

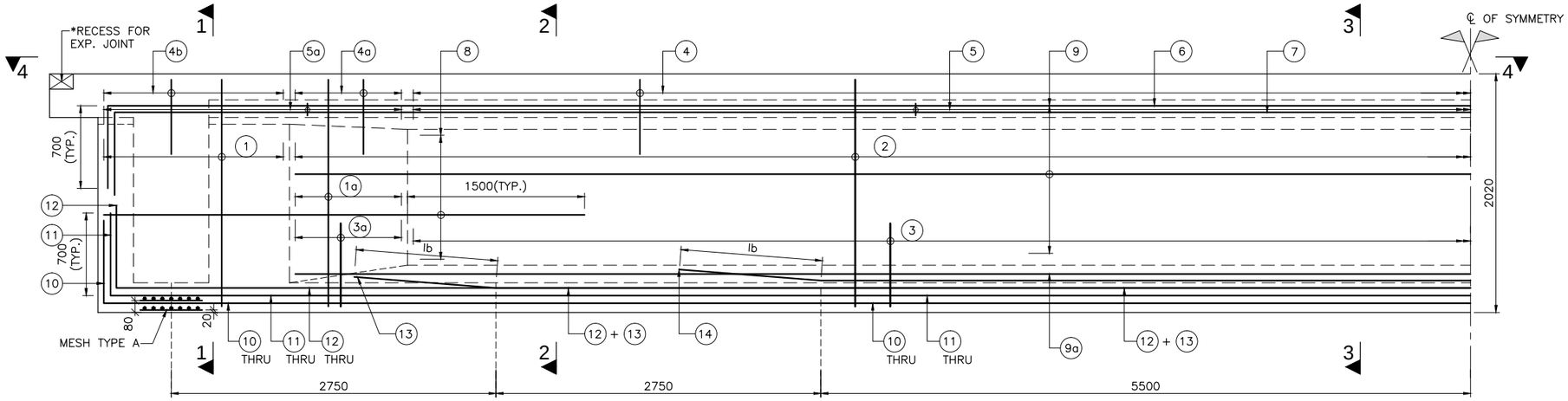

SECTIONAL ELEVATION OF GIRDER

(SCALE 1:30)

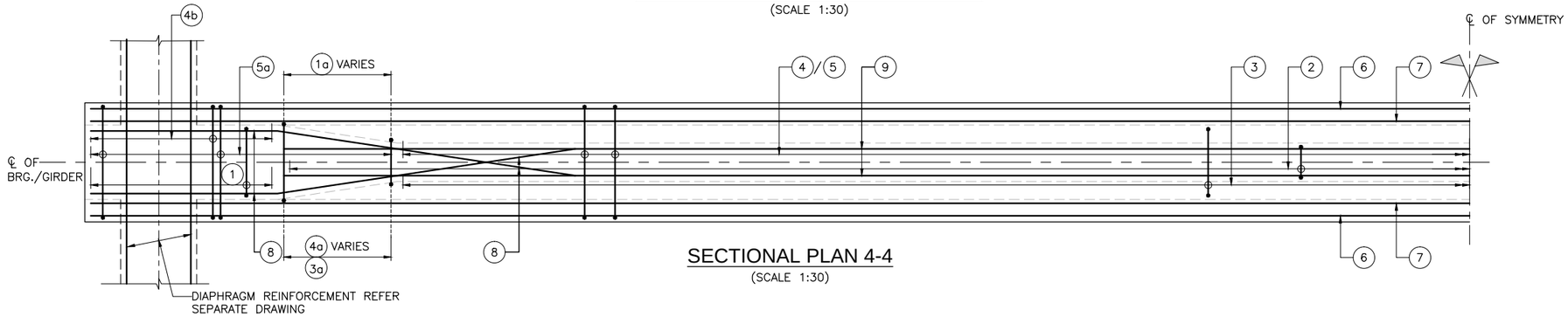

SECTIONAL PLAN 4-4

(SCALE 1:30)

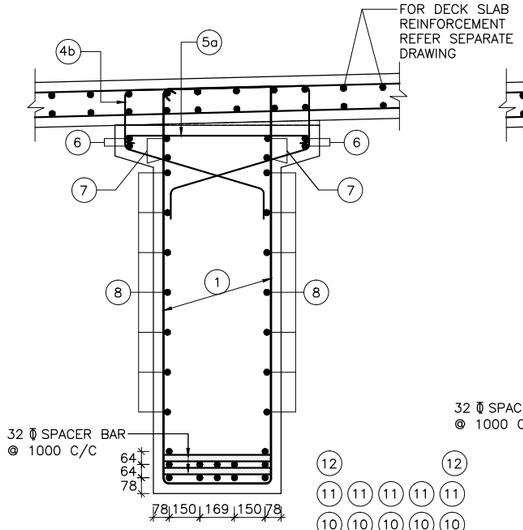

SECTION - 1-1

(SCALE 1:20)

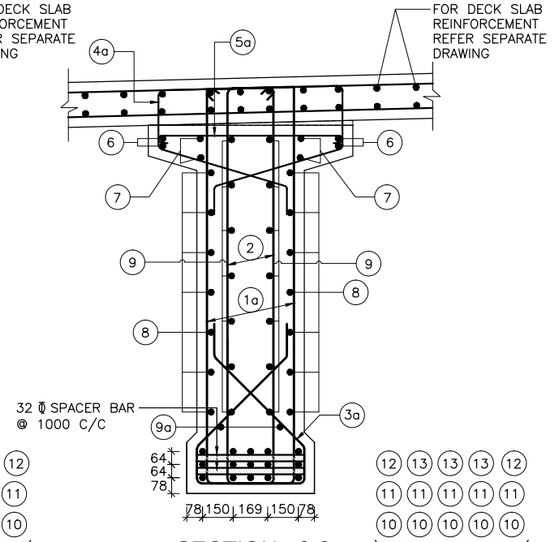

SECTION - 2-2

(SCALE 1:20)

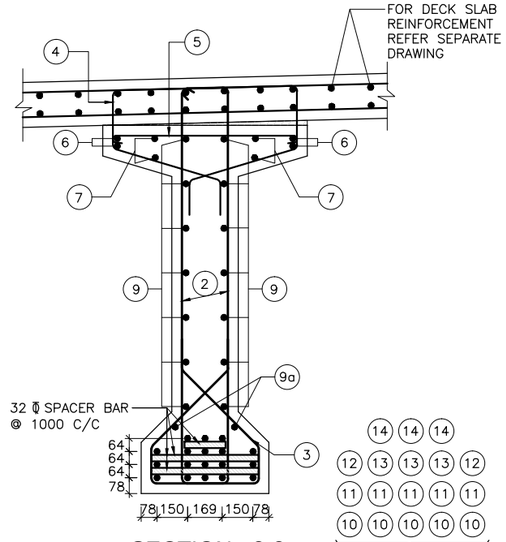

SECTION - 3-3

(SCALE 1:20)

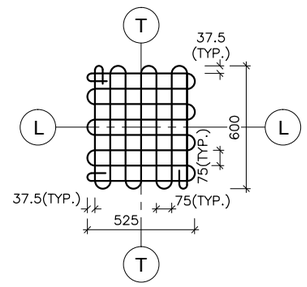

DETAIL OF 8 ϕ MESH TYPE `A'

(IN TWO LAYERS)
(SCALE = 1:20)

NOTES:-

1. ALL DIMENSIONS ARE IN MILLIMETERS AND LEVELS ARE IN METERS UNLESS OTHERWISE SPECIFIED.
2. DIMENSIONS ARE NOT TO BE SCALED. ONLY WRITTEN DIMENSIONS SHALL BE FOLLOWED.
3. THE REINFORCEMENT SHALL BE HYSD. BARS (GRADE DESIGNATION Fe–500D) CONFORMING TO IS:1786–2008. HAVING MINIMUM ELONGATION OF 16% AS PER TABLE:18.1 OF IRC:112–2011.
4. CLEAR COVER TO THE OUTERMOST STEEL SHALL BE 40mm UNLESS OTHERWISE SPECIFIED.
5. LAPPING OF REINFORCEMENT SHALL BE AVOIDED AS FAR AS POSSIBLE. IN CASE LAPPING OF BARS BECOMES UNAVOIDABLE, MINIMUM LAP LENGTH OF REINFORCEMENT BARS SHALL BE CALCULATED AS FOLLOW WITH MAXIMUM ALLOWABLE LAPPING (p) OF 50% ONLY. (IRC:112–2011) (CLAUSE:15.2.5.1)
   LAP LENGTH ls = α_1.lbnet
   α_1 = 1.0 FOR p%≤25%
   α_1 = 1.15 FOR 25%≤p%≤33%
   α_1 = 1.4 FOR 33%≤p%≤50%
   (IRC:112–2011) (CLAUSE:15.2.3.3)
   DEVELOPMENT LENGTH (lbnet)
   lbnet = α.lb (α = 1.0)
   lb = kϕ
   k = 40 FOR M30 (Fe500D)
   k = 36 FOR M35 (Fe500D)
   k = 34 FOR M40 (Fe500D)
   FOR UNFAVORABLE BOND CONDITION THE lb SHOULD BE MULTIPLIED BY FACTOR OF 1.43. FOR ϕ>32mm lb, SHOULD BE INCREASED BY MULTIPLYING FACTOR $(\frac{100}{132-\phi})$

REFERENCE DRAWINGS:-

1. DIMENSIONAL DETAILS OF PRECAST RCC GIRDER & CAST–IN–SITU SLAB SUPERSTRUCTURE:
   –NIRTTP/NAG–MUG/SOPYANG/RCC–G/22m/01
2. REINFORCEMENT DETAILS OF END CROSS GIRDER:
   –NIRTTP/NAG–MUG/SOPYANG/RCC–G/22m/03
3. REINFORCEMENT DETAILS OF RCC DECK SLAB:
   –NIRTTP/NAG–MUG/SOPYANG/RCC–G/22m/04(SHEET 1&2)
4. DETAILS OF LOAD AND FORCES FOR POT/PTFE BEARINGS:
   –NIRTTP/NAG–MUG/SOPYANG/RCC–G/22m/05

SCHEDULE OF REINFORCEMENT

BAR MKD.	DESCRIPTION	SHAPE	REMARKS
1	2L–12 ϕ @125 C/C		STIRRUP
1a	2L–12 ϕ @125 C/C		STIRRUP (VARIES)
2	2L–12 ϕ @150 C/C		STIRRUP
3	10 ϕ @150 C/C		
3a	10 ϕ @125 C/C		(VARIES)
4	10 ϕ @150 C/C		
4a	10 ϕ @125 C/C		(VARIES)
4b	10 ϕ @125 C/C		
5	10 ϕ @150 C/C		LINKS
5a	10 ϕ @125 C/C		LINKS
6	12 ϕ –4 Nos.		
7	12 ϕ –4 Nos.		
8	10 ϕ –7 Nos.		ON EACH FACE
9	10 ϕ –7 Nos.		ON EACH FACE
9a	10 ϕ –1 Nos.		ON EACH FACE
10	32 ϕ –5 Nos.		
11	32 ϕ –5 Nos.		
12	32 ϕ –2 Nos.		
13	32 ϕ –3 Nos.		
14	32 ϕ –3 Nos.		

EMPLOYER	PROJECT	DESIGN CONSULTANT
Government of Nepal Ministry of Physical Infrastructure and Transport, Department of Roads, Foreign Co-operation Branch	Nepal India Regional Trade and Transport Project (NIRTTP) (IDA CREDIT No. 5273 - NEP) Detailed Design of Kathmandu (Nagdhunga) - Naubise - Mugling Road and Bridges	Intercontinental Consultants & Technocrats Pvt.Ltd, A-8, Green Park, New Delhi - 110016 Ph : 4086-3000, Fax 2685-5252 In Joint Venture With Soosung Engineering Co. Ltd., South Korea In Association With Full Bright Consultancy (Pvt.) Ltd. 316,Baburam Acharya Sadak, Sinamangal, Kathmandu, GPO Box: 4970, Kathmandu, Nepal

Prepared By		K.M.JOHRI
Designed By		V.CHAUDHARY
Checked By		P.K.KHAN
Approved By		B.N.SINGH

DRAWING TITLE:
REINFORCEMENT DETAILS OF LONGITUDINAL GIRDER
EFFECTIVE SPAN : 22.00m

Drawing No.:
NIRTTP/NAG-MUG/SOPYANG/RCC-G/22m/02

Scale: As Shown

Date: JUNE-2018

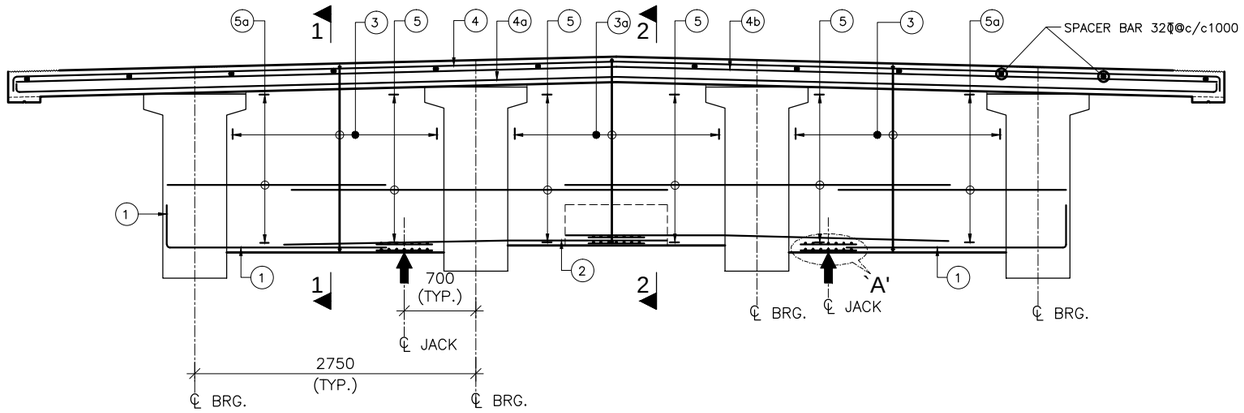

SECTIONAL ELEVATION OF END DIAPHRAGM

(SCALE 1:40)

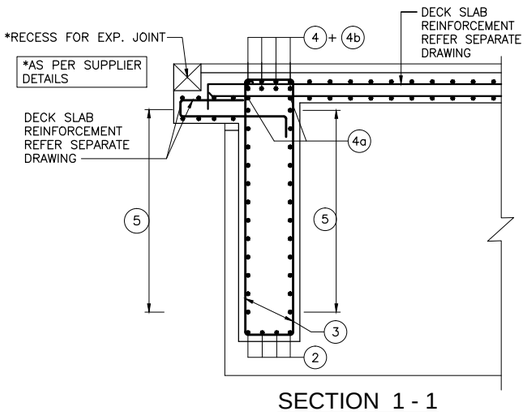

SECTION 1 - 1

(SCALE 1:30)

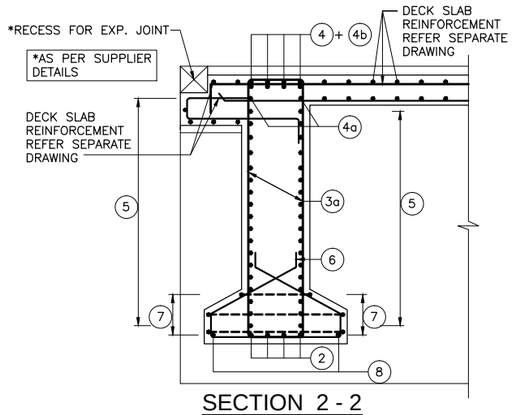

SECTION 2 - 2

(SCALE 1:30)

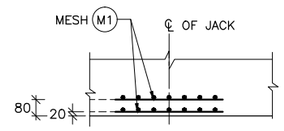

DETAIL - `A'

(SCALE 1:20)

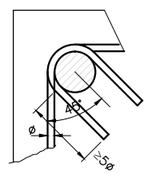

TYPICAL DETAIL INDICATING ANCHORAGE OF STIRRUP

(SCALE 1:30)

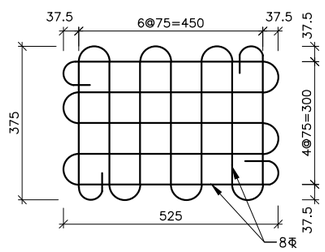

DETAIL OF 8ϕ MESH (M1) REINF. FOR JACK LOCATION

(SCALE 1:10)

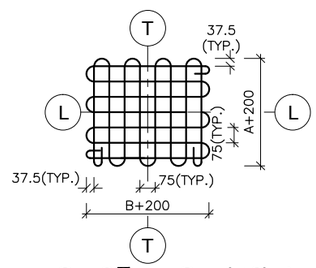

DETAIL OF 8ϕ MESH (M2) REINF. FOR PIN / METALLIC GUIDED BEARING

WHERE A & B ARE SIZE OF BEARING

(SCALE 1:20)

NOTES:-

1. ALL DIMENSIONS ARE IN MILLIMETERS AND LEVELS ARE IN METERS UNLESS OTHERWISE SPECIFIED.
2. DIMENSIONS ARE NOT TO BE SCALED. ONLY WRITTEN DIMENSIONS SHALL BE FOLLOWED.
3. THE REINFORCEMENT SHALL BE HYSD. BARS (GRADE DESIGNATION Fe–500D) CONFORMING TO IS:1786–2008. HAVING MIN. ELONGATION OF 16% AS PER TABLE:18.1 OF IRC:112–2011
4. CLEAR COVER TO THE OUTERMOST STEEL SHALL BE 40mm UNLESS OTHERWISE SPECIFIED.
5. LAPPING OF REINFORCEMENT SHALL BE AVOIDED AS FAR AS POSSIBLE. IN CASE LAPPING OF BARS BECOMES UNAVOIDABLE, MINIMUM LAP LAPPING OF REINFORCEMENT BARS SHALL BE CALCULATED AS FOLLOW WITH MAXIMUM ALLOWABLE LAPPING (p) OF 50% ONLY. (IRC:112–2011) (CLAUSE:15.2.5.1)
   LAP LENGTH ls = α_1.lbnet
   α_1 = 1.0 FOR p%≤25%
   α_1 = 1.15 FOR 25%≤p%≤33%
   α_1 = 1.4 FOR 33%≤p%≤50%
   (IRC:112–2011) (CLAUSE:15.2.3.3)
   DEVELOPMENT LENGTH (lbnet)
   lbnet = α.lb (α = 1.0)
   lb = kϕ
   k = 40 FOR M30 (Fe500D)
   k = 36 FOR M35 (Fe500D)
   k = 34 FOR M40 (Fe500D)

FOR UNFAVORABLE BOND CONDITION THE lb SHOULD BE MULTIPLIED BY FACTOR OF 1.43. FOR ϕ>32mm lb, SHOULD BE INCREASED BY MULTIPLYING FACTOR $(\frac{100}{132-\phi})$

REFERENCE DRAWINGS:-

1. DIMENSIONAL DETAILS OF PRECAST RCC GIRDER & CAST–IN–SITU SLAB SUPERSTRUCTURE:
   –NIRTTP/NAG–MUG/SOPYANG/RCC–G/22m/01
2. REINFORCEMENT DETAILS OF LONGITUDINAL GIRDER:
   –NIRTTP/NAG–MUG/SOPYANG/RCC–G/22m/02
3. REINFORCEMENT DETAILS OF RCC DECK SLAB:
   –NIRTTP/NAG–MUG/SOPYANG/RCC–G/22m/04 (SHEET 1 & 2)
4. DETAILS OF LOAD AND FORCES FOR POT/PTFE BEARINGS:
   –NIRTTP/NAG–MUG/SOPYANG/RCC–G/22m/05

REINFORCEMENT SCHEDULE FOR END DIAPHRAGM

BAR MKD.	DESCRIPTION	SHAPE	REMARKS
1	25ϕ –4 Nos.		
2	25ϕ –4 Nos.		
3	25ϕ –2L @125 c/c		
3a	25ϕ –2L @125 c/c		
4	25ϕ –4 Nos.		
4a	16ϕ –2 Nos.		
4b	25ϕ –4 Nos.		
5	25ϕ –14 Nos.		(ON EACH FACE)
5a	16ϕ –14 Nos.		(ON EACH FACE)
6	12ϕ –7 Nos.		
7	12ϕ –3 Nos.		
8	10ϕ –2 Nos.		

EMPLOYER	PROJECT	DESIGN CONSULTANT					
Government of Nepal Ministry of Physical Infrastructure and Transport, Department of Roads, Foreign Co-operation Branch	Nepal India Regional Trade and Transport Project (NIRTTP) (IDA CREDIT No. 5273 - NEP) Detailed Design of Kathmandu (Nagdhunga) - Naubise - Mugling Road and Bridges	Intercontinental Consultants & Technocrats Pvt.Ltd, A-8, Green Park, New Delhi - 110016 Ph : 4086-3000, Fax 2685-5252 In Joint Venture With Soosung Engineering Co. Ltd., South Korea	In Association With Full Bright Consultancy (Pvt.) Ltd. 316,Baburam Acharya Sadak, Sinamangal, Kathmandu, GPO Box: 4970, Kathmandu, Nepal	Prepared By		K.M.JOHRI	DRAWING TITLE: REINFORCEMENT DETAILS OF END CROSS GIRDER EFFECTIVE SPAN : 22.00m
				Designed By		V.CHAUDHARY	
				Checked By		P.K.KHAN	Drawing No.: NIRTTP/NAG-MUG/SOPYANG/RCC-G/22m/03
				Approved By		B.N.SINGH	

Scale:	Date: JUNE-2018
As Shown	

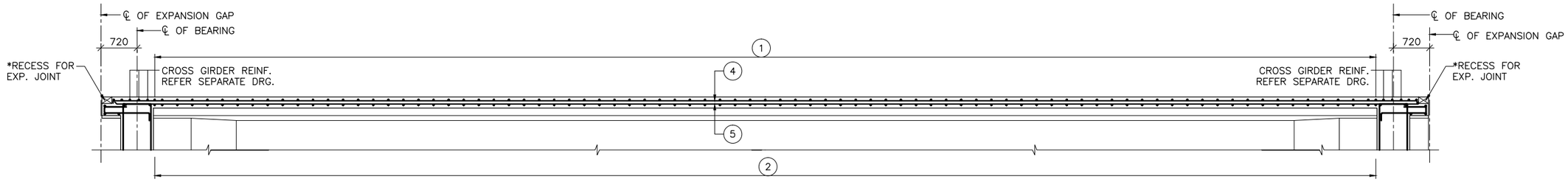

SECTION 1 - 1
(SCALE 1:60)

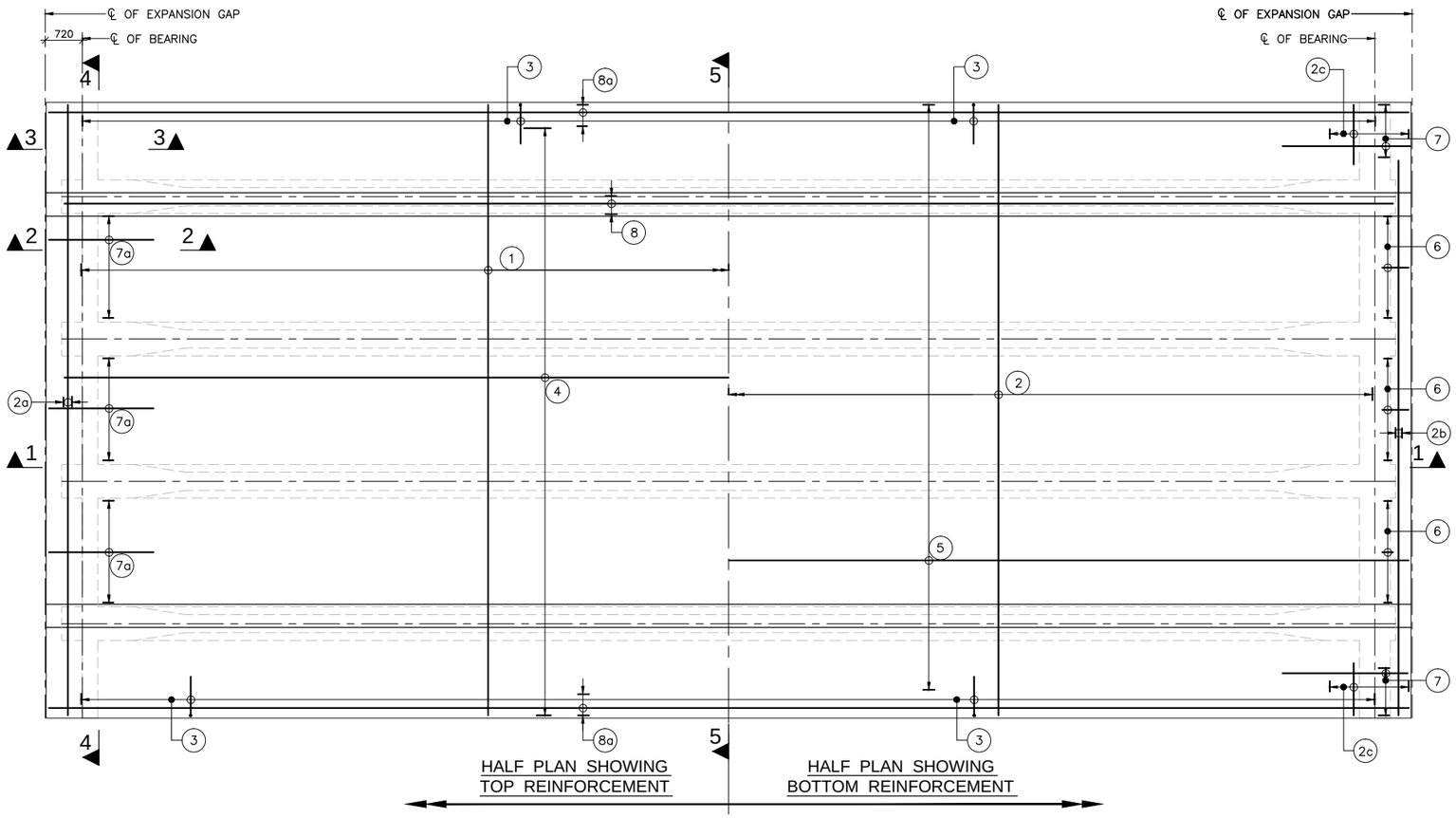

HALF PLAN SHOWING TOP REINFORCEMENT

HALF PLAN SHOWING BOTTOM REINFORCEMENT

PLAN
(SCALE 1:75)

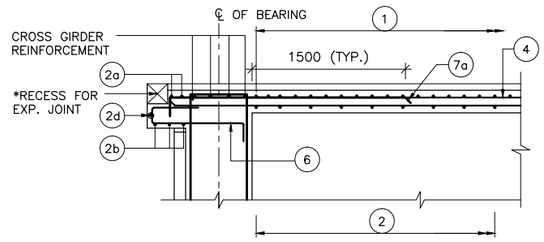

SECTION 2 - 2
(SCALE 1:40)

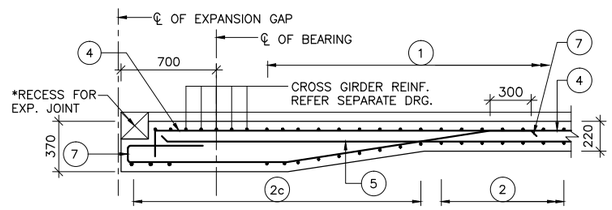

SECTION 3 - 3
(SCALE 1:30)

EMPLOYER	PROJECT	DESIGN CONSULTANT					
Government of Nepal Ministry of Physical Infrastructure and Transport, Department of Roads, Foreign Co-operation Branch	Nepal India Regional Trade and Transport Project (NIRTTP) (IDA CREDIT No. 5273 - NEP) Detailed Design of Kathmandu (Nagdhunga) - Naubise - Mugling Road and Bridges	Intercontinental Consultants & Technocrats Pvt.Ltd, A-8, Green Park, New Delhi - 110016 Ph : 4086-3000, Fax 2685-5252 In Joint Venture With Soosung Engineering Co. Ltd., South Korea	In Association With Full Bright Consultancy (Pvt.) Ltd. 316,Baburam Acharya Sadak, Sinamangal, Kathmandu, GPO Box: 4970, Kathmandu, Nepal	Prepared By		K.M.JOHRI	DRAWING TITLE: REINFORCEMENT DETAILS OF DECK SLAB EFFECTIVE SPAN : 22.00m Drawing No.: NIRTTP/NAG-MUG/SOPYANG/RCC-G/22m/04	Scale: As Shown	Date: JUNE-2018 (SHEET 1 OF 2)
				Designed By		V.CHAUDHARY			
				Checked By		P.K.KHAN			
				Approved By		B.N.SINGH			

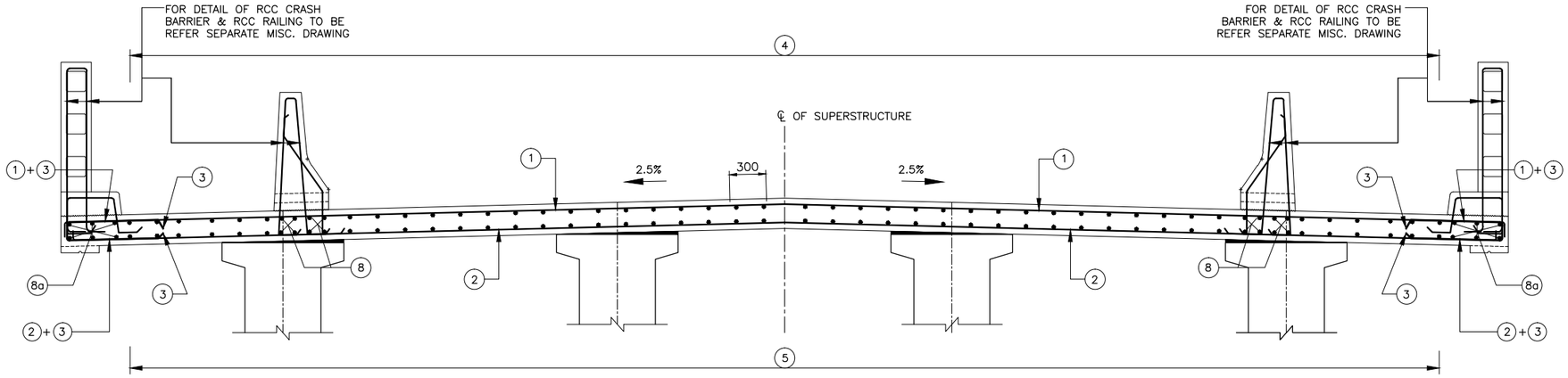

SECTION AT 5 - 5 (MID SPAN)

(SCALE 1:30)

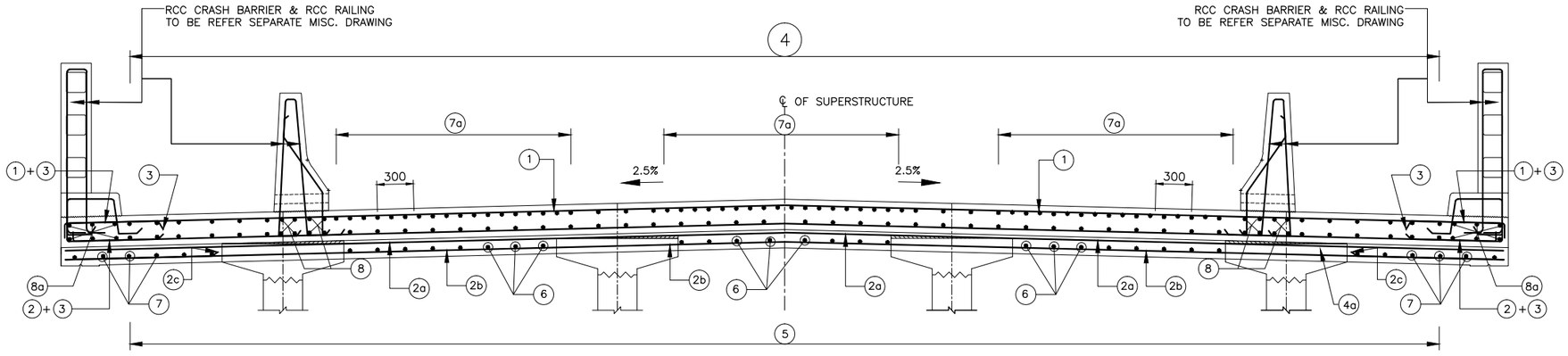

SECTION AT 4 - 4 (NEAR SUPPORT)

(SCALE 1:30)

FOR RCC CRASH BARRIER REINF. REFER MISCELLANEOUS DRG.

NOTES:-

1. ALL DIMENSIONS ARE IN MILLIMETERS AND LEVELS ARE IN METERS UNLESS OTHERWISE SPECIFIED.
2. DIMENSIONS ARE NOT TO BE SCALED. ONLY WRITTEN DIMENSIONS SHALL BE FOLLOWED.
3. THE REINFORCEMENT SHALL BE HYSD. BARS (GRADE DESIGNATION Fe-500D) CONFORMING TO IS:1786-2008. HAVING MIN. ELONGATION OF 16% AS PER TABLE:18.1 OF IRC:112-2011
4. CLEAR COVER TO THE OUTERMOST STEEL SHALL BE 40mm UNLESS OTHERWISE SPECIFIED.
5. LAPPING OF REINFORCEMENT SHALL BE AVOIDED AS FAR AS POSSIBLE. IN CASE LAPPING OF BARS BECOMES UNAVOIDABLE, MINIMUM LAP LENGTH OF REINFORCEMENT BARS SHALL BE CALCULATED AS FOLLOW WITH MAXIMUM ALLOWABLE LAPPING (p) OF 50% ONLY. (IRC:112-2011) (CLAUSE:15.2.5.1)
   LAP LENGTH ls = $\alpha 1$.lbnet
   $\alpha 1$ = 1.0 FOR p%≤25%
   $\alpha 1$ = 1.15 FOR 25%≤p%≤33%
   $\alpha 1$ = 1.4 FOR 33%≤p%≤50%
   (IRC:112-2011) (CLAUSE:15.2.3.3)
   DEVELOPMENT LENGTH (lbnet)
   lbnet = α.lb (α = 1.0)
   lb = kϕ
   k = 40 FOR M30 (Fe500D)
   k = 36 FOR M35 (Fe500D)
   k = 34 FOR M40 (Fe500D)
   FOR UNFAVORABLE BOND CONDITION THE lb SHOULD BE MULTIPLIED BY FACTOR OF 1.43. FOR ϕ>32mm lb, SHOULD BE INCREASED BY MULTIPLYING FACTOR $(\frac{132-\phi}{100})$
6. RECESS FOR EXPANSION JOINT, AS PER SUPPLIER DETAILS.

REFERENCE DRAWINGS:-

1. DIMENSIONAL DETAILS OF PRECAST RCC GIRDER & CAST-IN-SITU SLAB SUPERSTRUCTURE:
   -NIRTTP/NAG-MUG/SOPYANG/RCC-G/22m/01
2. REINFORCEMENT DETAILS OF LONGITUDINAL GIRDER:
   -NIRTTP/NAG-MUG/SOPYANG/RCC-G/22m/02
3. REINFORCEMENT DETAILS OF END CROSS GIRDER:
   -NIRTTP/NAG-MUG/SOPYANG/RCC-G/22m/03
4. DETAILS OF LOAD AND FORCES FOR POT/PTFE BEARINGS:
   -NIRTTP/NAG-MUG/SOPYANG/RCC-G/22m/05

REINFORCEMENT SCHEDULE

BAR MKD.	DESCRIPTION	SHAPE	REMARKS
1	12ϕ @100 C/C		
2	12ϕ @100 C/C		
2a	12ϕ @100 C/C		
2b	12ϕ @100 C/C		
2c	12ϕ @100 C/C		
2d	12ϕ -1 Nos.		
3	12ϕ @100 C/C		
4	10ϕ @200 C/C		
5	10ϕ @200 C/C		
6	12ϕ @200 C/C		
7	12ϕ @200 C/C		
7a	12ϕ @200 C/C		
8	16ϕ -8 Nos.		(ON EACH SIDE)
8a	16ϕ -6 Nos.		(ON EACH SIDE)

EMPLOYER	PROJECT	DESIGN CONSULTANT					
Government of Nepal Ministry of Physical Infrastructure and Transport, Department of Roads, Foreign Co-operation Branch	Nepal India Regional Trade and Transport Project (NIRTTP) (IDA CREDIT No. 5273 - NEP) Detailed Design of Kathmandu (Nagdhunga) - Naubise - Mugling Road and Bridges	Intercontinental Consultants & Technocrats Pvt.Ltd, A-8, Green Park, New Delhi - 110016 Ph : 4086-3000, Fax 2685-5252 In Joint Venture With Soosung Engineering Co. Ltd., South Korea	In Association With Full Bright Consultancy (Pvt.) Ltd. 316,Baburam Acharya Sadak, Sinamangal, Kathmandu, GPO Box: 4970, Kathmandu, Nepal	Prepared By		K.M.JOHRI	DRAWING TITLE: REINFORCEMENT DETAILS OF DECK SLAB EFFECTIVE SPAN : 22.00m
				Designed By		V.CHAUDHARY	
				Checked By		P.K.KHAN	Drawing No.: NIRTTP/NAG-MUG/SOPYANG/RCC-G/22m/04
				Approved By		B.N.SINGH	

Scale:	Date: JUNE-2018
As Shown	(SHEET 2 OF 2)

LEGEND:-

B1	⊕	FREE SLIDING POT–CUM–PTFE BEARING
B2	◎	PIN BEARING
B3	▭	METALLIC GUIDED BEARING

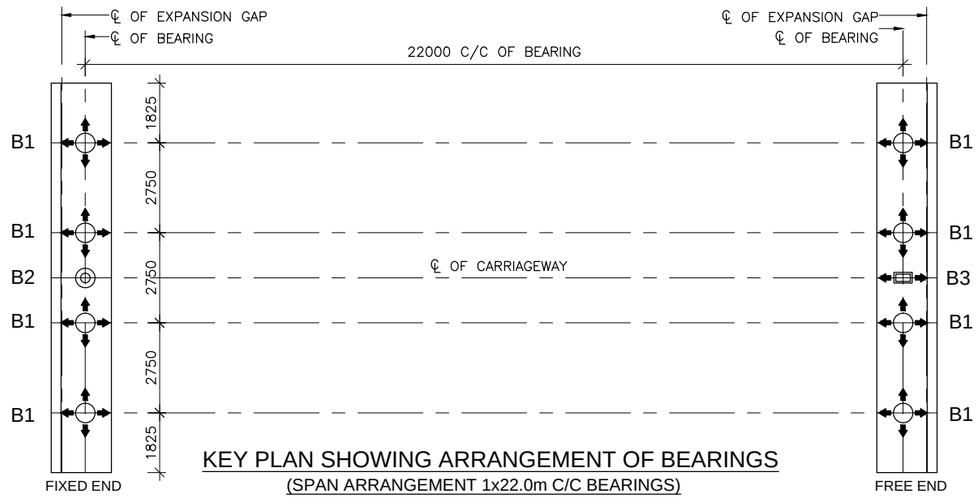

KEY PLAN SHOWING ARRANGEMENT OF BEARINGS

(SPAN ARRANGEMENT 1x22.0m C/C BEARINGS)

NOTES:–

1. MATERIAL SPECIFICATIONS, DESIGN OF BEARINGS, ACCEPTANCE CRITERIA AND INSTALLATION MORTH SHALL BE IN ACCORDANCE WITH IRC:83 (PART III)–2002 AND MOSRTH SPECIFICATIONS (FOURTH REVISION).
2. BEARINGS SHALL BE OBTAINED FROM MANUFACTURERS APPROVED BY MORTH.
3. INSTALLATION OF BEARINGS SHALL BE UNDER THE SUPERVISION OF REPRESENTATIVE OF THE MANUFACTURER.
4. FOR DESIGN LOADS AND ROTATIONS REFER TABLE IN THE DRAWING.
5. FOR BEARINGS, DETAILED SHOP DRAWINGS SHALL BE PREPARED BY THE SUPPLIER AND BE DULY APPROVED BEFORE MANUFACTURE AND INSTALLATION.
6. THE GROUT/BEDDING MORTAR SHALL BE HIGH STRENGTH FREE FLOWING NON SHRINK GROUT (80 MPa STRENGTH).
7. ALL BEARING SHALL BE PLACED IN TRULY HORIZONTAL PLANE ONLY.
8. FOR DESIGN OF POT BEARINGS, THE DESIGN HORIZONTAL FORCE SHALL, IN NO CASE BE LESS THAN 10% AND GREATER THAN 25% OF THE DESIGN VERTICAL LOAD.
9. THE CONTRACTOR AND SUPPLIER OF BEARINGS SHALL BE FURNISH A MINIMUM TROUBLE FREE WARRANTY OF 10 YEARS AFTER OPENING OF THE BRIDGE.
10. THIS DRAWING SHALL BE READ IN CONJUNCTION WITH:
    DIMENSIONAL DETAILS OF PRECAST RCC GIRDER & CAST–IN–SITU SLAB SUPERSTRUCTURE
    NIRTTP/NAG–MUG/SOPYANG/RCC–G/22m/01 (SHEET 1 & 2)

GENERAL DATA:

1. STRUCTURE IS LOCATED IN SEISMIC ZONE : V
2. GRADE OF CONCRETE
   ABUTMENT CAP. M–30
   PEDESTAL M–40

TABLE SHOWING DATA FOR DESIGN OF BEARINGS

SL. No.	BEARING TYPE	LOAD CONDITION	LOADS, FORCES, MOVEMENTS AND ROTATION DATA										BEARING (Nos.) PER SPAN
			VERTICAL LOAD (kN)		HORIZONTAL FORCE (kN)				ROTATION (RAD)		MOVEMENT (mm)		
			CASE	MAGNITUDE	LONGITUDINAL		TRANSVERSE		CASE	MAGNITUDE	LONGITUDINAL	TRANSVERSE	
(1)	(2)	(3)	(4)	(5)	(6)	(7)	(8)	(9)	(10)	(11)	(12)	(13)	(14)
1.	FREE POT –CUM PTFE	NORMAL	MAXIMUM (WITH LIVE LOAD)	1516	COEXISTING	152	COEXISTING	–	COEXISTING	0.002	–16.5/16.2	4.70	8
			MINIMUM (WITH LIVE LOAD)	576	COEXISTING	58	COEXISTING	–	COEXISTING	0.002	–16.5/16.2	4.70	
			MINIMUM (WITHOUT LIVE LOAD)	440	COEXISTING	44	COEXISTING	–	COEXISTING	0.002	–16.5/16.2	4.70	
		SEISMIC (LONGITUDINAL)	MAXIMUM (WITH LIVE LOAD)	884	COEXISTING	–	COEXISTING	–	COEXISTING	0.002	–16.5/16.2	4.70	
			MINIMUM (WITH LIVE LOAD)	522	COEXISTING	–	COEXISTING	–	COEXISTING	0.002	–16.5/16.2	4.70	
			MINIMUM (WITHOUT LIVE LOAD)	487	COEXISTING	–	COEXISTING	–	COEXISTING	0.002	–16.5/16.2	4.70	
		SEISMIC (TRANSVERSE)	MAXIMUM (WITH LIVE LOAD)	884	COEXISTING	–	COEXISTING	–	COEXISTING	0.002	–16.5/16.2	4.70	
			MINIMUM (WITH LIVE LOAD)	522	COEXISTING	–	COEXISTING	–	COEXISTING	0.002	–16.5/16.2	4.70	
			MINIMUM (WITHOUT LIVE LOAD)	487	COEXISTING	–	COEXISTING	–	COEXISTING	0.002	–16.5/16.2	4.70	
2.	PIN BEARING	NORMAL	MAXIMUM (WITH LIVE LOAD)	–	COEXISTING	278	COEXISTING	–	COEXISTING	0.002	–	–	1
			MINIMUM (WITH LIVE LOAD)	–	COEXISTING	203	COEXISTING	–	COEXISTING	0.002	–	–	
			MINIMUM (WITHOUT LIVE LOAD)	–	COEXISTING	203	COEXISTING	–	COEXISTING	0.002	–	–	
		SEISMIC (LONGITUDINAL)	MAXIMUM (WITH LIVE LOAD)	–	COEXISTING	2469	COEXISTING	405	COEXISTING	0.002	–	–	
			MINIMUM (WITH LIVE LOAD)	–	COEXISTING	2469	COEXISTING	365	COEXISTING	0.002	–	–	
			MINIMUM (WITHOUT LIVE LOAD)	–	COEXISTING	2433	COEXISTING	365	COEXISTING	0.002	–	–	
		SEISMIC (TRANSVERSE)	MAXIMUM (WITH LIVE LOAD)	–	COEXISTING	766	COEXISTING	1349	COEXISTING	0.002	–	–	
			MINIMUM (WITH LIVE LOAD)	–	COEXISTING	766	COEXISTING	1216	COEXISTING	0.002	–	–	
			MINIMUM (WITHOUT LIVE LOAD)	–	COEXISTING	766	COEXISTING	811	COEXISTING	0.002	–	–	
3.	METALLIC GUIDE BEARING	NORMAL	MAXIMUM (WITH LIVE LOAD)	–	COEXISTING	–	COEXISTING	–	COEXISTING	0.002	–16.5/16.2	–	1
			MINIMUM (WITH LIVE LOAD)	–	COEXISTING	–	COEXISTING	–	COEXISTING	0.002	–16.5/16.2	–	
			MINIMUM (WITHOUT LIVE LOAD)	–	COEXISTING	–	COEXISTING	–	COEXISTING	0.002	–16.5/16.2	–	
		SEISMIC (LONGITUDINAL)	MAXIMUM (WITH LIVE LOAD)	–	COEXISTING	–	COEXISTING	405	COEXISTING	0.002	–16.5/16.2	–	
			MINIMUM (WITH LIVE LOAD)	–	COEXISTING	–	COEXISTING	365	COEXISTING	0.002	–16.5/16.2	–	
			MINIMUM (WITHOUT LIVE LOAD)	–	COEXISTING	–	COEXISTING	365	COEXISTING	0.002	–16.5/16.2	–	
		SEISMIC (TRANSVERSE)	MAXIMUM (WITH LIVE LOAD)	–	COEXISTING	–	COEXISTING	1349	COEXISTING	0.002	–16.5/16.2	–	
			MINIMUM (WITH LIVE LOAD)	–	COEXISTING	–	COEXISTING	1216	COEXISTING	0.002	–16.5/16.2	–	
			MINIMUM (WITHOUT LIVE LOAD)	–	COEXISTING	–	COEXISTING	811	COEXISTING	0.002	–16.5/16.2	–	

EMPLOYER	PROJECT	DESIGN CONSULTANT					
Government of Nepal Ministry of Physical Infrastructure and Transport, Department of Roads, Foreign Co-operation Branch	Nepal India Regional Trade and Transport Project (NIRTTP) (IDA CREDIT No. 5273 - NEP) Feasibility Study of Kathmandu (Nagdhunga) -Detailed Design of Kathmandu (Nagdhunga) -Naubise - Mugling Road and BridgesNaubise - Mugling Road and Bridges	Intercontinental Consultants & Technocrats Pvt.Ltd, A-8, Green Park, New Delhi - 110016 Ph : 4086-3000, Fax 2685-5252 In Joint Venture With Soosung Engineering Co. Ltd., South Korea	In Association With Full Bright Consultancy (Pvt.) Ltd. 316,Baburam Acharya Sadak, Sinamangal, Kathmandu, GPO Box: 4970, Kathmandu, Nepal	Prepared By	K.M.JOHRI	DRAWING TITLE: DETAILS OF LOADS AND FORCES FOR POT/PTFE BEARINGS EFFECTIVE SPAN : 22.00m	Scale: As Shown
				Designed By	V.CHAUDHARY		Date: JUNE-2018
				Checked By	P.K.KHAN	Drawing No.: NIRTTP/NAG-MUG/SOPYANG/RCC-G/22m/05	
				Approved By	B.N.SINGH		

KHAHARE KHOLA BRIDGE

CHAINAGE : 12+255

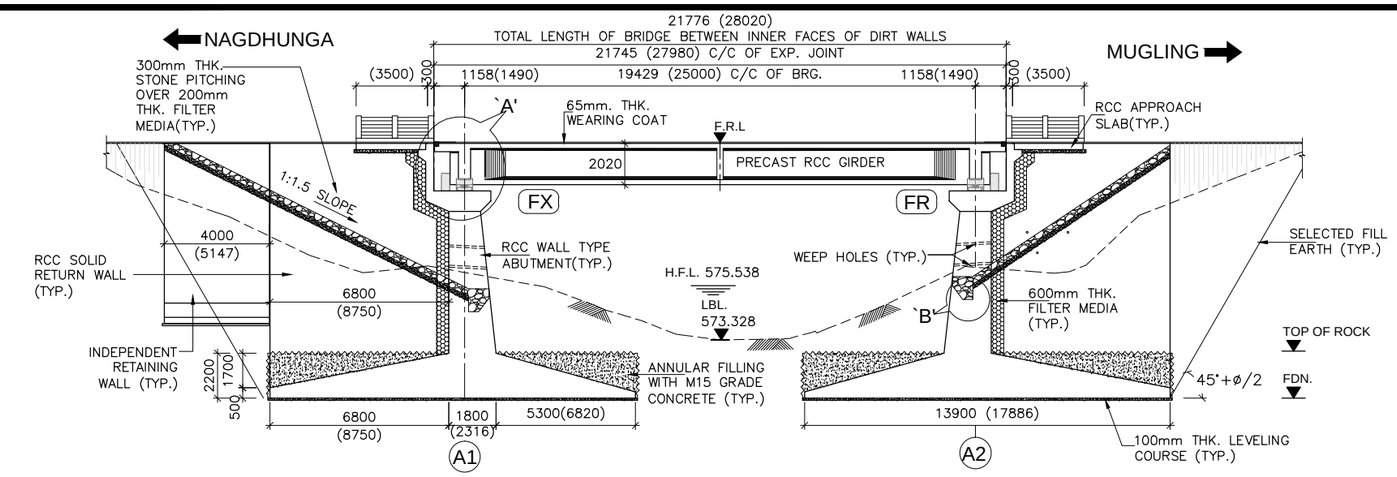

SECTIONAL ELEVATION OF PROPOSED BRIDGE

(SCALE 1:200)

KEY PLAN

FINISHED ROAD LEVEL (m)	583.000	583.000	583.000	583.000
GROUND LEVEL. (m)	578.401	576.625		576.625
FOUNDING LEVEL (m)	574.127	570.328		570.328
CHAINAGE (m)	(−)20.790	(−)13.990	0.000	13.990

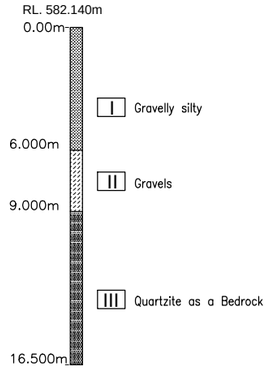

BH-01

(SCALE 1:175)

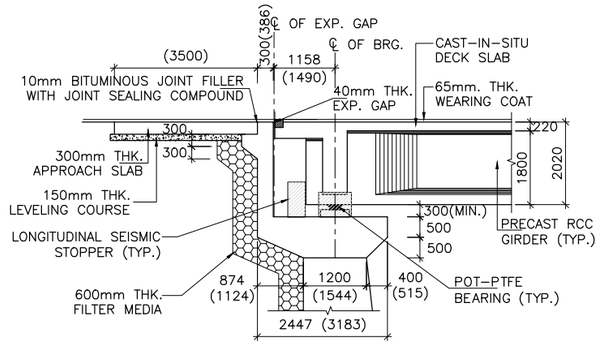

DETAIL-`A'

(SCALE 1:100)

CHAINAGE AT 0+000M IS 12+355KM

DIMENSION SHOWN IN BRACKET ARE ALONG SKEW DIRECTION

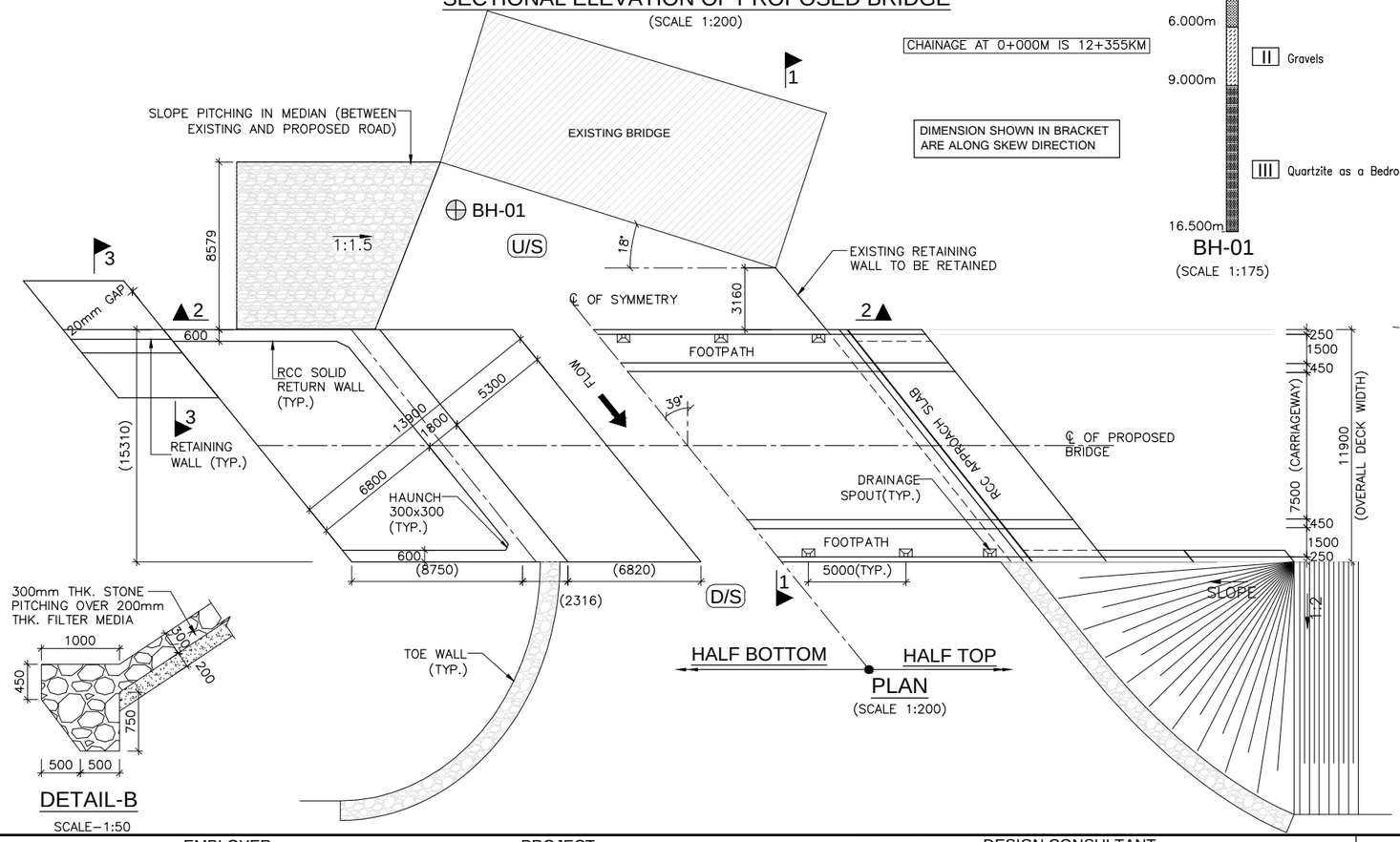

PLAN

(SCALE 1:200)

DETAIL-B

SCALE−1:50

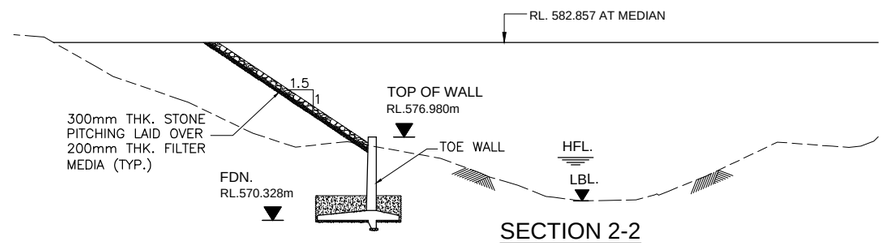

SECTION 2-2

(SCALE 1:250)

LEGEND:

F.R.L	:	FINISHED ROAD LEVEL
H.F.L	:	HIGH FLOOD LEVEL
℄	:	CENTER LINE
LVL.	:	LEVEL
TYP.	:	TYPICAL
THK.	:	THICK
D/S	:	DOWNSTREAM
U/S	:	UPSTREAM
G.L	:	GROUND LEVEL
FDN.	:	FOUNDING LEVEL
FX	:	FIX
FR	:	FREE
BH	:	BORE HOLE

HYDRAULIC DATA:-

DISCHARGE	− 26.0 cumec
VELOCITY	− 2.14m/s
H.F.L	− 575.538m
ROCK TOP LEVEL	− 571.520m

EMPLOYER	PROJECT	DESIGN CONSULTANT
Government of Nepal Ministry of Physical Infrastructure and Transport, Department of Roads, Foreign Co-operation Branch	Nepal India Regional Trade and Transport Project (NIRTTP) (IDA CREDIT No. 5273 - NEP) Detailed Design of Kathmandu (Nagdhunga) - Naubise - Mugling Road and Bridges	Intercontinental Consultants & Technocrats Pvt.Ltd, A-8, Green Park, New Delhi - 110016 Ph : 4086-3000, Fax 2685-5252 In Joint Venture With Soosung Engineering Co. Ltd., South Korea In Association With Full Bright Consultancy (Pvt.) Ltd. 316,Baburam Acharya Sadak, Sinamangal, Kathmandu, GPO Box: 4970, Kathmandu, Nepal

Prepared By		K.M.JOHRI
Designed By		RAGHURAJ T.
Checked By		P.K.KHAN
Approved By		B.N.SINGH

DRAWING TITLE:
GENERAL ARRANGEMENT
DRAWING FOR MAJOR BRIDGE AT CH.12+355KM
(SPAN ARRANGEMENT 25.000m C/C BEARING)
OVER KHAHARE KHOLA
(PACKAGE-II)

Drawing No.: NIRTTP/NAG-MUG/12+355/GAD/25.00M/R0

Scale: As Shown

Date: JUNE-2018

(SHEET 1 OF 2)

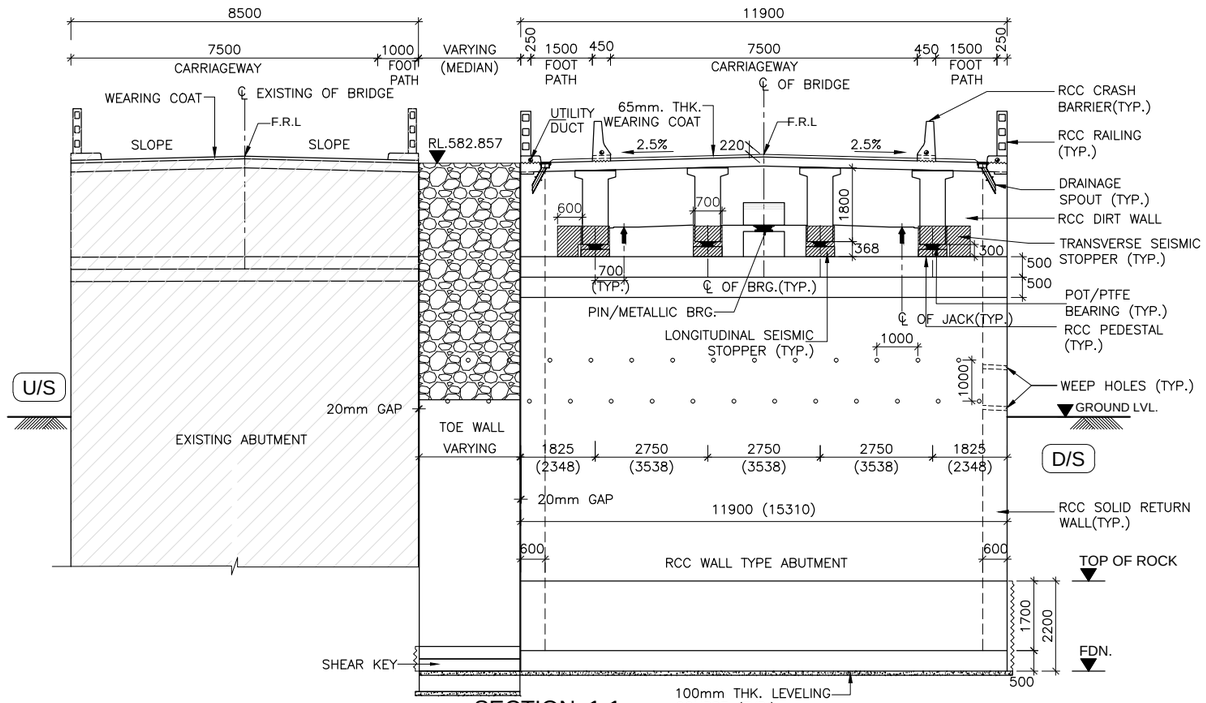

SECTION 1-1

(SCALE 1:100)

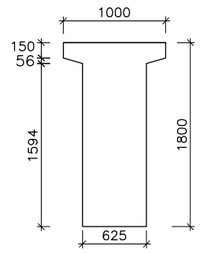

AT SUPPORT

DETAILS OF PRECAST RCC GIRDER

(SCALE 1:40)

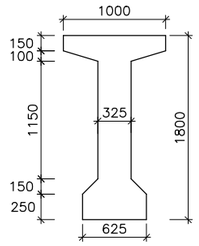

AT MID SPAN

DETAILS OF PRECAST RCC GIRDER

(SCALE 1:40)

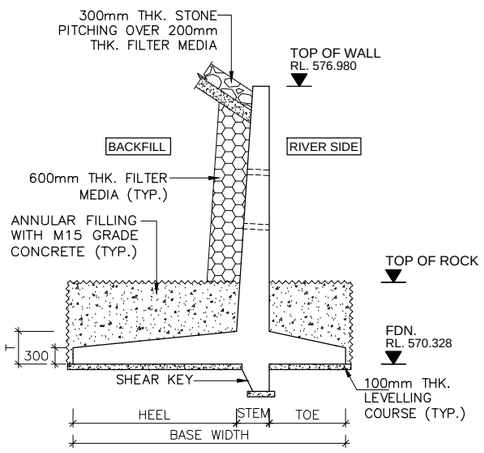

DETAIL OF TOE WALL

(REFER SEPARATE DRAWING FOR DETAILS)

(SCALE 1:75)

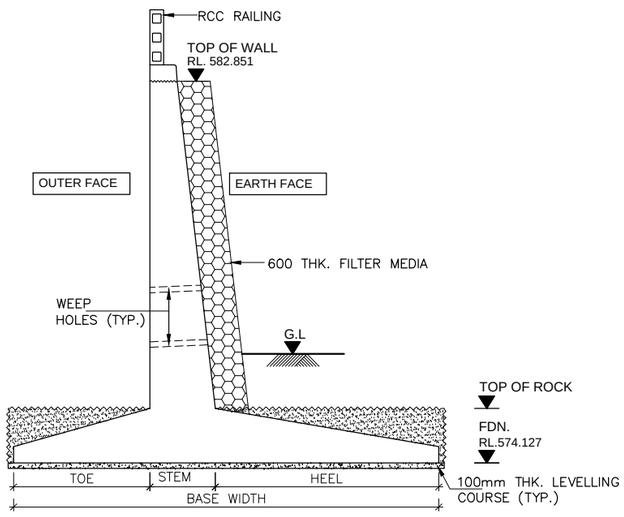

SECTION 3-3

(SCALE 1:75)

REFER SEPARATE DRAWING FOR DETAILS

REFERENCE DRAWINGS:-

1. DIMENSIONAL DETAILS OF ABUTMENT AND FOUNDATION:
   –NIRTTP/NAG–MUG/KHAHARE/SUB–01
2. REINFORCEMENT DETAILS OF ABUTMENT, DIRT WALL, RETURN WALL, PEDESTAL AND SEISMIC STOPPER:
   –NIRTTP/NAG–MUG/KHAHARE/SUB–02(SHEET1&3)
3. DIMENSIONAL DETAILS OF PRECAST RCC GIRDER & CAST–IN–SITU SLAB SUPERSTRUCTURE:
   –NIRTTP/NAG–MUG/KHAHARE/RCC–G/25m/01
4. REINFORCEMENT DETAILS OF LONGITUDINAL GIRDER:
   –NIRTTP/NAG–MUG/KHAHARE/RCC–G/25m/02
5. REINFORCEMENT DETAILS OF END CROSS GIRDER:
   –NIRTTP/NAG–MUG/KHAHARE/RCC–G/25m/03
6. REINFORCEMENT DETAILS OF RCC DECK SLAB:
   –NIRTTP/NAG–MUG/KHAHARE/RCC–G/25m/04(SHEET 1&2)
7. DETAILS OF LOAD AND FORCES FOR POT/PTFE BEARINGS:
   –NIRTTP/NAG–MUG/KHAHARE/RCC–G/25m/05

MISCELLANEOUS DRAWINGS:

1. DETAILS OF APPROACH SLAB:
   –NIRTTP/NAG–MUG/PACKAGE–II/MISC.–01a
2. DETAILS OF DRAINAGE SPOUT & WEARING COAT:
   –NIRTTP/NAG–MUG/PACKAGE–II/MISC.–02
3. DIMENSIONAL & REINF. DETAILS OF R.C.C CRASH BARRIER:
   –NIRTTP/NAG–MUG/PACKAGE–II/MISC.–03
4. DIMENSIONAL & REINF. DETAILS OF R.C.C RAILING:
   –NIRTTP/NAG–MUG/PACKAGE–II/MISC.–04
5. DIMENSIONAL AND REINFORCEMENT DETAILS OF RCC RETAINING WALL/MEDIAN WALL:
   –NIRTTP/NAG–MUG/PACKAGE–II/MISC.–06
6. DIMENSIONAL AND REINFORCEMENT DETAILS OF RCC TOE WALL:
   –NIRTTP/NAG–MUG/PACKAGE–II/MISC.–07

NOTES:-

1. ALL DIMENSIONS ARE IN MILLIMETER AND LEVELS ARE IN METER UNLESS OTHERWISE SPECIFIED.
2. DIMENSIONS ARE NOT TO BE SCALED ONLY WRITTEN DIMENSIONS SHALL BE FOLLOWED.
3. THE BRIDGE HAS BEEN DESIGNED FOR MOST SEVERE OF:
   (i) ONE LANE OF IRC CLASS 70R LOADING OR TWO LANES OF IRC CLASS A LOADING WHEN FOOTPATHS ARE IN POSITION.
   (ii) ONE LANE OF IRC CLASS 70R LOADING +ONE LANE OF IRC CLASS A LOADING OR 3 LANES OF IRC CLASS A LOADING WHEN FOOTPATHS ARE REMOVED.
   (iii) ONE LANE OF SV LOADING IN ACCORDANCE WITH CLAUSE 204.5 OF IRC–6:2017.
4. MINIMUM CONCRETE COVER, GRADE OF CONCRETE, MINIMUM CEMENT CONTENT & MAXIMUM W/C RATIO SHALL BE AS PER 'MODERATE' CONDITION OF EXPOSURE.
5. CONCRETE SHALL BE DESIGN MIX WITH A MINIMUM 28 DAYS CHARACTERISTIC STRENGTH ON 150mm CUBE AS FOLLOWS:
   a. LEVELING COURSE (UNDER FOUNDATION) – M10
   b. LEVELING COURSE (UNDER APPROACH SLAB) – M15
   c. FOUNDATION – M30
   d. PEDESTAL – M40
   e. SEISMIC STOPPER – M40
   f. SUBSTRUCTURE – M30
   g. SUPERSTRUCTURE – M35
   h. RETURN/RETAINING WALL – M30
   j. CRASH BARRIER – M40
   k. APPROACH SLAB – M30
6. UNTENSIONED REINFORCEMENT SHALL BE THERMO MECHANICALLY TREATED (TMT), HYSD BARS OF GRADE DESIGNATION Fe–500D CONFORMING TO IS: 1786.
7. POT/PTFE BEARINGS SHALL BE DESIGNED AS PER PROVISION OF IRC : 83 (PART–III 2002).
8. STRIP SEAL TYPE EXPANSION JOINTS SHALL BE PROVIDED AS PER PROVISION OF IRC: SP–69–2011.
9. 65MM THICK WEARING COURSE COMPRISING OF 40MM THICK ASPHALTIC CONCRETE OVERLAID WITH 25MM THICK MASTIC ASPHALT SHALL BE PROVIDED AS PER SECTION 500 OF MORT&H SPECIFICATION.
10. 100MM DIA WEEP HOLES AT 1000MM C/C STAGGERED HORIZONTALLY AND VERTICALLY SHALL BE PROVIDED IN ONE OR TWO LAYERS ABOVE G.L IN VERTICAL WALLS OF ABUTMENT, RETURN/RETAINING WALLS AT A SLOPE OF 1 VERTICAL TO 20 HORIZONTAL TOWARDS THE DRAINING FACE.
11. WATER TO BE USED IN CONCRETING AND CURING SHALL CONFORM TO CLAUSE 18.4.5 OF IRC:112–2011.
12. LAYING, COMPACTION AND EXTENT OF BACKFILL BEHIND ABUTMENTS AND RETURN/RETAINING WALLS SHALL CONSIST OF SELECTED EARTH CONFORMING TO APPENDIX:6 OF IRC:78–2014 HAVING PROPERTIES C=0, ϕ= 35°, δ=22.5° & γd = 20 KN/M³.
13. MINIMUM CLEAR COVER TO OUTER MOST REINFORCEMENT SHALL BE AS UNDER:–
    a. SUPERSTRUCTURE – 40MM
    b. SUBSTRUCTURE (EARTH FACE) – 75MM
    c. SUBSTRUCTURE (NON EARTH FACE) – 50MM
    d. FOUNDATION – 75MM
14. THE BRIDGE IS DESIGNED FOR PROVISION OF SEISMIC ZONE–V AS PER CLAUSE 219 OF IRC:6:2017.
15. SAFE BEARING CAPACITY CONSIDERED IN DESIGN AT PROPOSED FOUNDING LEVEL IS 34 T/M². THIS SHALL BE ASCERTAINED BEFORE EXECUTION AT SITE.
16. FILTER MEDIA SHALL BE PROVIDED AS PER APPENDIX–6 OF IRC–78:2014.
17. MINIMUM ANCHORAGE OF FOUNDATION IN SOFT ROCK SHALL BE 1.5M AND 0.6M IN HARD ROCK.
18. WHERE FOUNDATIONS ARE PLACED ON ROCK, TRENCHES AROUND THE FOOTING SHALL BE FILLED UP WITH CONCRETE OF M15 GRADE UP TO TOP OF ROCK.
19. THIS DRAWING SHOULD BE READ IN CONJUNCTION WITH RELEVANT HIGHWAY PLAN AND PROFILE DRAWINGS.
20. ALL CHAINAGES, FRL, GL SHALL BE CONFIRMED AT SITE PRIOR TO EXECUTION.
21. FOR APPROACH SLAB, DRAINAGE SPOUTS, CRASH BARRIER, PROTECTION WORK, RETAINING WALL AND MEDIAN WALL DETAILS REFER SEPARATE DRAWINGS.
22. WHEREVER THE COMPONENTS OF EXISTING BRIDGE INTERFERES WITH THE PROPOSED BRIDGE, THAT SHALL BE DISMANTLED UPTO FOUNDATION TOP.
23. MINIMUM LONGITUDINAL GRADIENT OF 0.3% SHALL BE PROVIDED IN PROPOSED BRIDGE TO FACILITATE DRAINAGE OF DECK AS PER CLAUSE 105.3.6 OF IRC–5.
24. SIZE OF EACH INDIVIDUAL STONE PITCHING AND LAUNCHING APRON SHALL NOT BE LESS THAN 30CM IN DIAMETER AND 40KG IN WEIGHT OR AS PER TABLE 5.1 & 5.2 OF IRC:89–1997. WHERE THE REQUIRED SIZE STONES ARE NOT ECONOMICALLY AVAILABLE, STONES IN WIRE CRATES MAY BE USED IN PLACE OF ISOLATED STONES OF EQUIVALENT WEIGHT.

ABUTMENT CAP SHALL BE CAST ONLY AFTER COMPLETING THE BACK FILLING WORK UP TO ABUTMENT SHAFT TOP LEVEL.

EMPLOYER	PROJECT	DESIGN CONSULTANT					
Government of Nepal Ministry of Physical Infrastructure and Transport, Department of Roads, Foreign Co-operation Branch	Nepal India Regional Trade and Transport Project (NIRTTP) (IDA CREDIT No. 5273 - NEP) Detailed Design of Kathmandu (Nagdhunga) - Naubise - Mugling Road and Bridges	Intercontinental Consultants & Technocrats Pvt.Ltd, A-8, Green Park, New Delhi - 110016 Ph : 4086-3000, Fax 2685-5252 In Joint Venture With Soosung Engineering Co. Ltd., South Korea	In Association With Full Bright Consultancy (Pvt.) Ltd. 316,Baburam Acharya Sadak, Sinamangal, Kathmandu, GPO Box: 4970, Kathmandu, Nepal	Prepared By		K.M.JOHRI	DRAWING TITLE: GENERAL ARRANGEMENT DRAWING FOR MAJOR BRIDGE AT CH.12+355 (SPAN ARRANGEMENT 25.000m C/C EXP. JOINT) OVER KHAHARE KHOLA (PACKAGE-II)	Scale: As Shown	Date: JUNE-2018
				Designed By		RAGHURAJ T.			
				Checked By		P.K.KHAN	Drawing No.: NIRTTP/NAG-MUG/12+355/GAD/25.00M/R0		(SHEET 2 OF 2)
				Approved By		B.N.SINGH			

LEGEND:-

- BEARING LOCATION IN PLAN
- JACK LOCATION IN PLAN
- JACK LOCATION IN ELEVATION

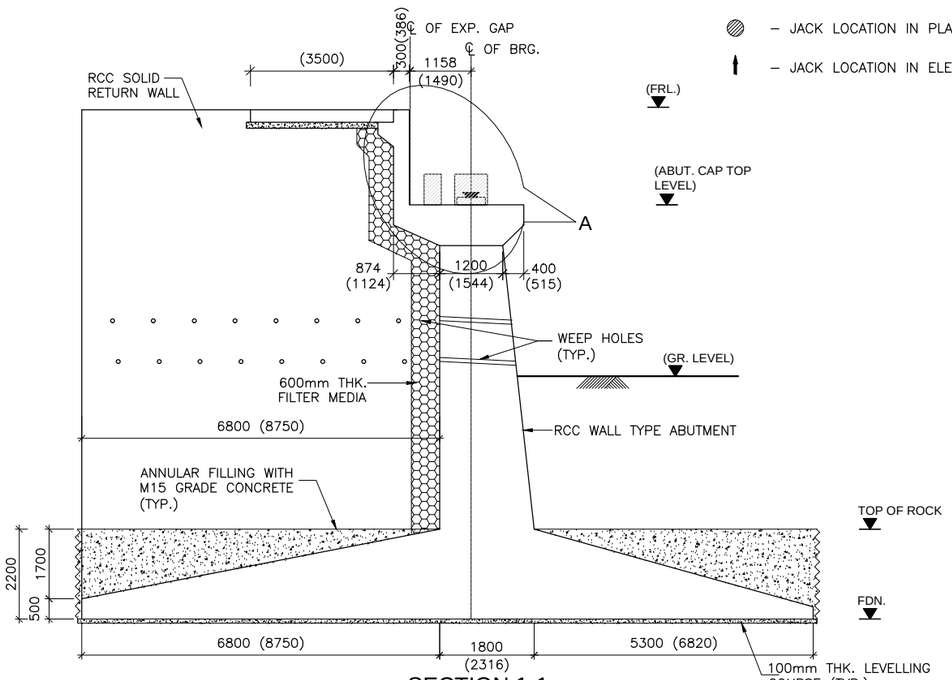

SECTION 1-1

(SCALE 1:100)

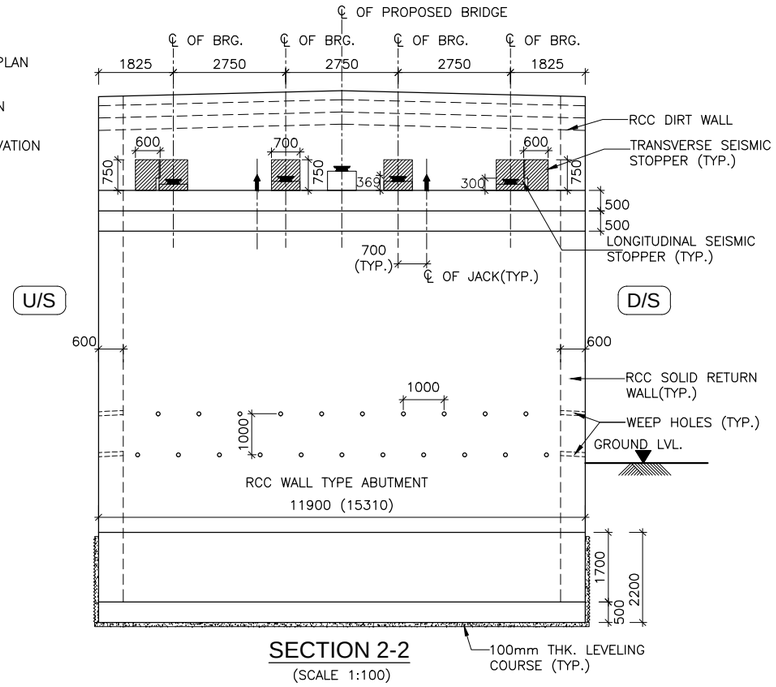

SECTION 2-2

(SCALE 1:100)

NOTES :-

1. ALL DIMENSIONS ARE IN MM, UNLESS OTHERWISE MENTIONED.
2. ONLY WRITTEN DIMENSIONS ARE TO BE FOLLOWED AND NO DIMENSION SHALL BE SCALED.
3. CONCRETE SHALL BE DESIGN MIX WITH A MINIMUM 28 DAYS CHARACTERISTIC STRENGTH ON 150mm CUBE AS FOLLOWS:
   a. LEVELING COURSE (UNDER FOUNDATION) – 10MPa
   b. LEVELING COURSE (UNDER APPROACH SLAB) – 15MPa
   c. FOUNDATION – 30MPa
   d. SUBSTRUCTURE – 30MPa
   e. APPROACH SLAB – 30MPa
   f. PEDESTAL – 40MPa
   g. SEISMIC STOPPER – 40MPa
4. UNTENSIONED REINFORCEMENT SHALL BE THERMO MECHANICALLY TREATED (TMT), HYSD BARS OF GRADE DESIGNATION Fe–500D CONFORMING TO IS: 1786.
5. MINIMUM CLEAR COVER TO OUTER MOST REINFORCEMENT SHALL BE AS UNDER
   a. SUBSTRUCTURE (EARTH FACE) – 75MM
   b. SUBSTRUCTURE (NON EARTH FACE) – 50MM
   c. FOUNDATION – 75MM
6. LL REPRESENTS LONGITUDINAL AXIS OF BRIDGE AND TT REPRESENTS TRANSVERSE AXIS OF ABUTMENT/FOUNDATION.
7. SAFE BEARING CAPACITY AT THE PROPOSED FOUNDING LEVEL HAS BEEN CONSIDERED AS 34 T/M² ON THE BASIS OF SUB SURFACE EXPLORATION RESULTS. THIS SHALL GOT CONFIRMED BEFORE EXECUTION.
8. THE LOCATION OF JACKS FOR LIFTING UP THE SUPERSTRUCTURE SHALL BE DISTINCTLY ETCHED ON SOFFIT OF SUPERSTRUCTURE AND ON TOP OF ABUTMENT CAP.
9. THIS DRAWING SHALL BE READ IN CONJUNCTION WITH THE FOLLOWING DRGS.
   - GENERAL ARRANGEMENT DRAWING REFER:
     –NIRTTP/NAG–MUG/GOMATI/GAD
     REINFORCEMENT DETAILS OF ABUTMENT DIRT WALL, RETURN WALL, PEDESTAL AND SEISMIC STOPPER
     REFER:
     –NIRTTP/NAG–MUG/GOMATI/SUB–04(SHEET1&2)
     NIRTTP/NAG–MUG/12+355/SUB–02

DIMENSION SHOWN IN BRACKET ARE ALONG SKEW DIRECTION

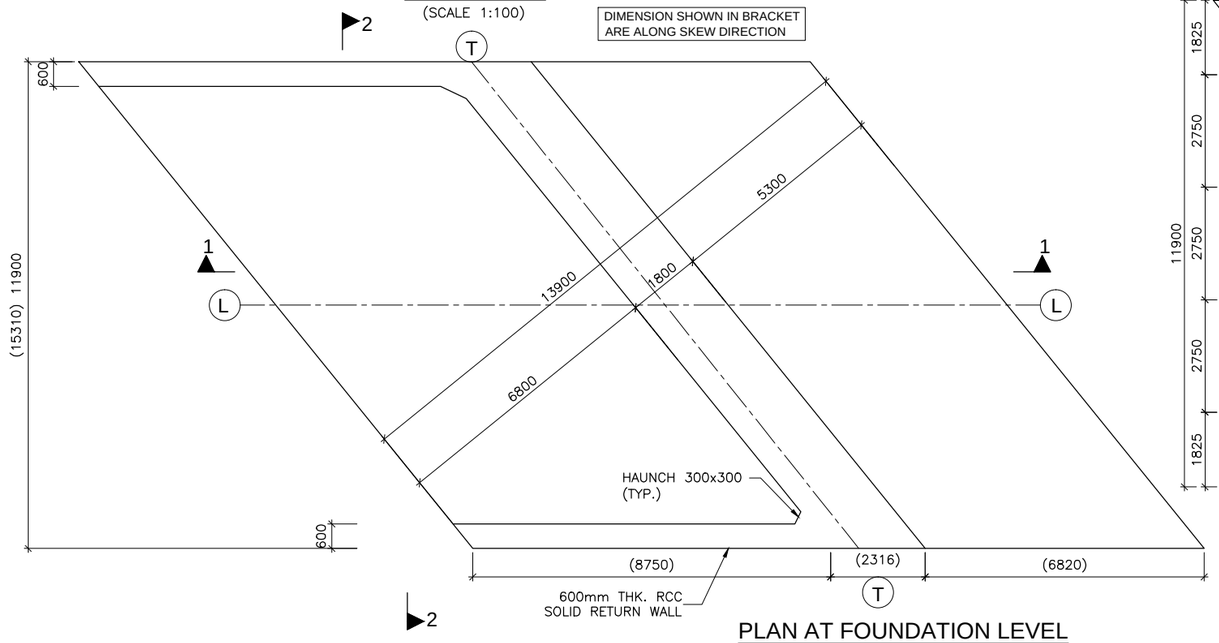

PLAN AT FOUNDATION LEVEL

(SCALE 1:100)

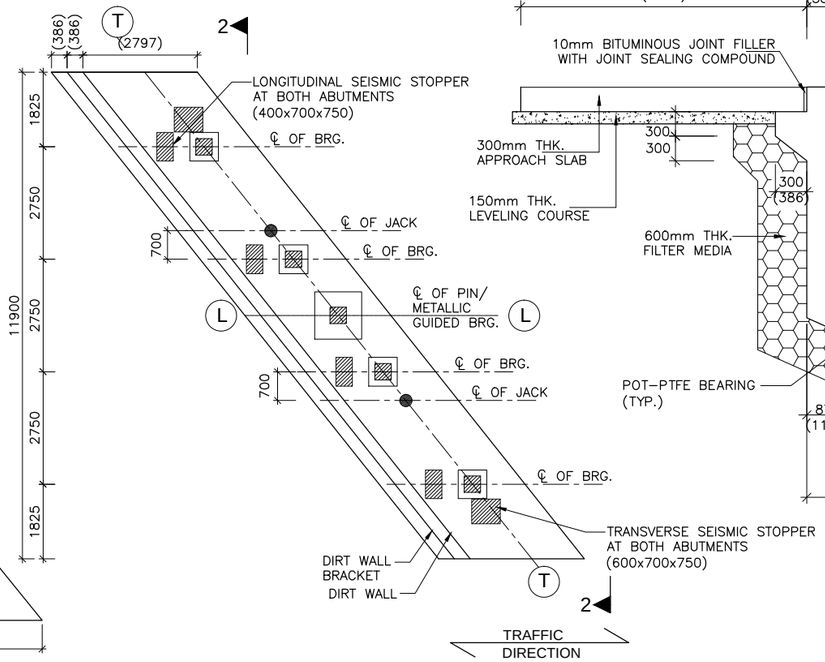

PLAN AT ABUTMENT CAP LEVEL

(SCALE 1:100)

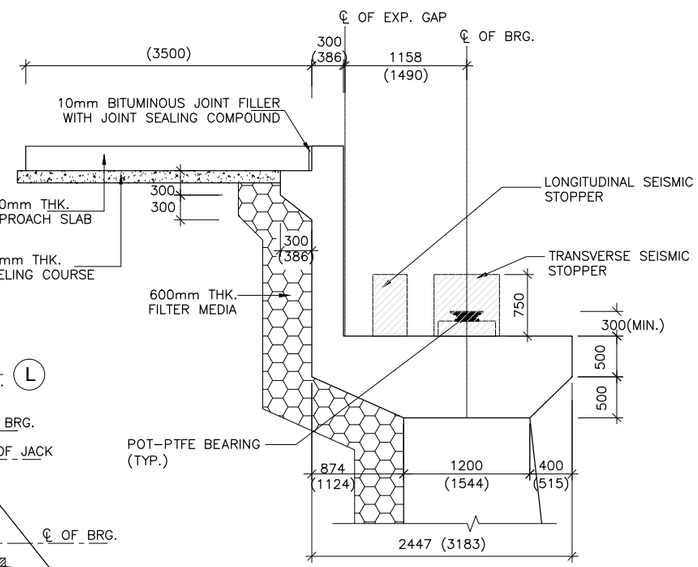

DETAIL-`A'

(SCALE 1:50)

EMPLOYER	PROJECT	DESIGN CONSULTANT					
Government of Nepal Ministry of Physical Infrastructure and Transport, Department of Roads, Foreign Co-operation Branch	Nepal India Regional Trade and Transport Project (NIRTTP) (IDA CREDIT No. 5273 - NEP) Detailed Design of Kathmandu (Nagdhunga) - Naubise - Mugling Road and Bridges	Intercontinental Consultants & Technocrats Pvt.Ltd, A-8, Green Park, New Delhi - 110016 Ph : 4086-3000, Fax 2685-5252 In Joint Venture With Soosung Engineering Co. Ltd., South Korea	In Association With Full Bright Consultancy (Pvt.) Ltd. 316,Baburam Acharya Sadak, Sinamangal, Kathmandu, GPO Box: 4970, Kathmandu, Nepal	Prepared By		K.M.JOHRI	DRAWING TITLE: DIMENSIONAL DETAILS OF ABUTMENT AND FOUNDATION OF MAJOR BRIDGE AT CH:- 12+355KM PACKAGE-II	Scale:
				Designed By		RAGHURAJ T.		As Shown
				Checked By		P.K.KHAN	Drawing No.:	
				Approved By		B.N.SINGH	NIRTTP/NAG-MUG/KHAHARE /SUB-01	

Date: JUNE-2018

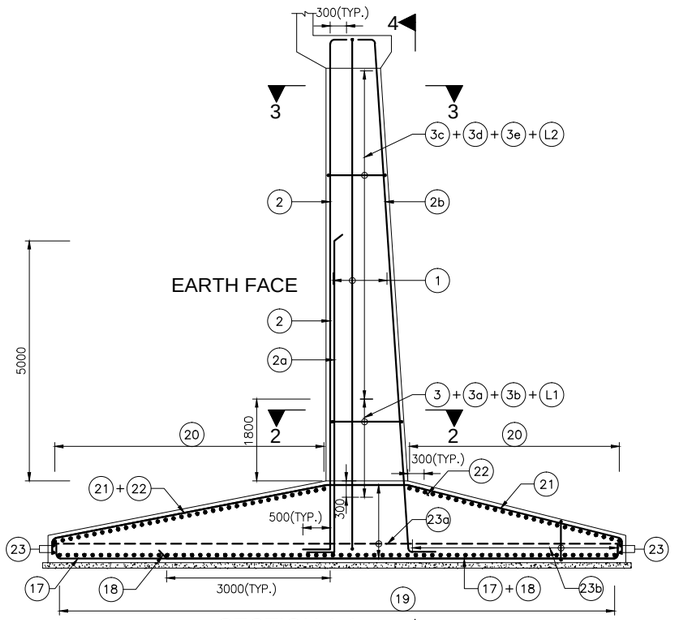

SECTION 1-1
(SCALE 1:75)

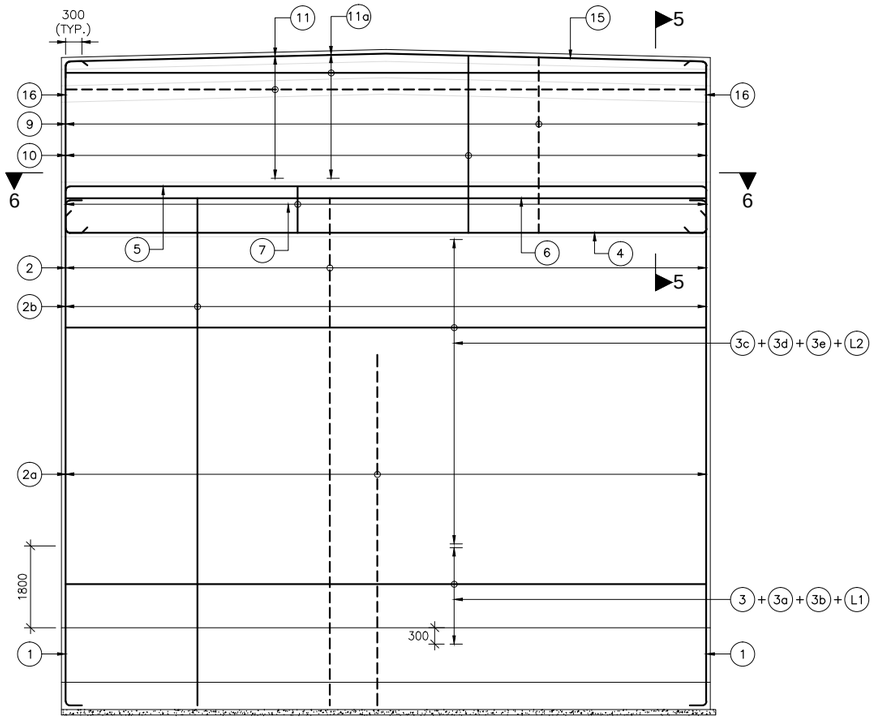

SECTION 4-4
(SCALE 1:75)
(FOUNDATION REINFORCEMENT & CORBEL REINFORCEMENT NOT SHOWN FOR CLARITY)

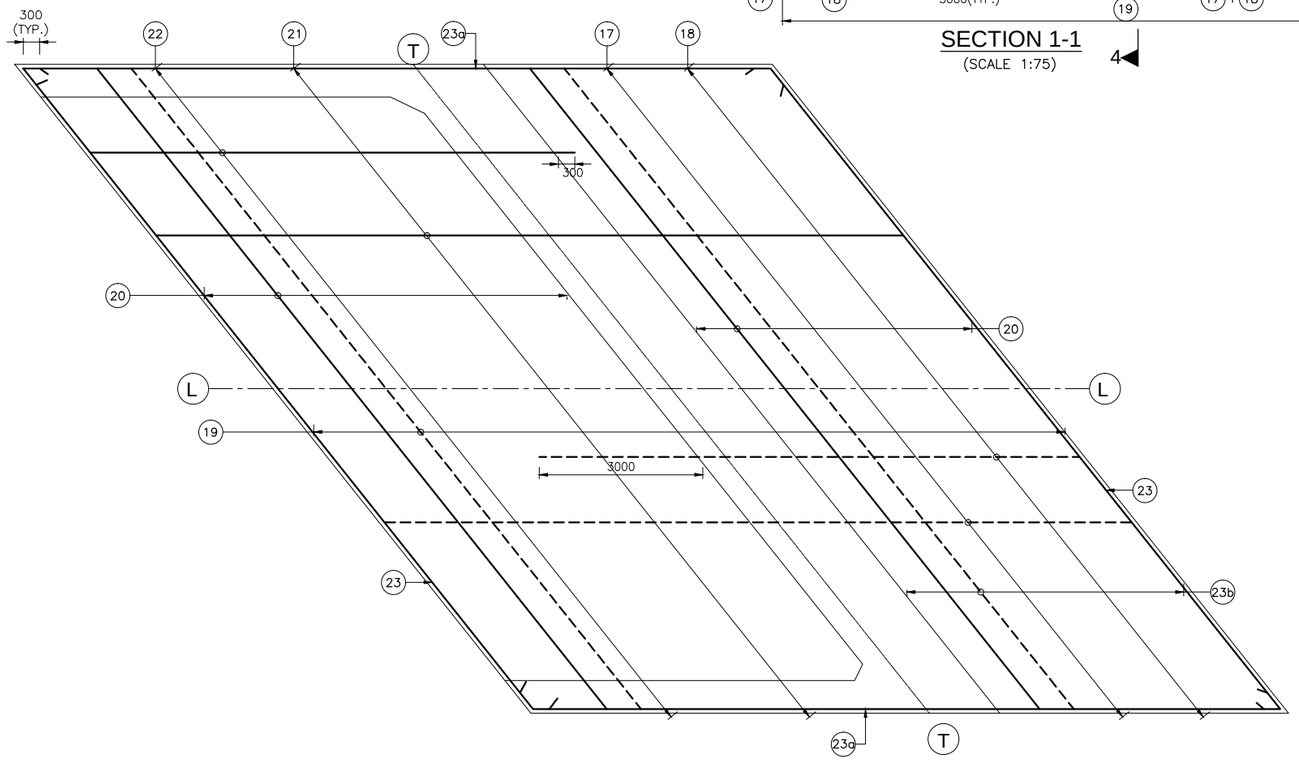

FOUNDATION PLAN
(SCALE 1:75)

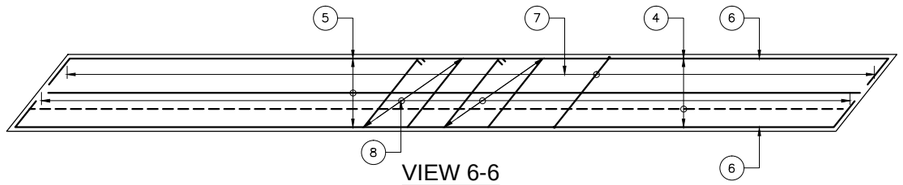

VIEW 6-6
SHOWING ABUTMENT CAP REINF.
(SCALE 1:75)

EMPLOYER	PROJECT	DESIGN CONSULTANT					
Government of Nepal Ministry of Physical Infrastructure and Transport, Department of Roads, Foreign Co-operation Branch	Nepal India Regional Trade and Transport Project (NIRTTP) (IDA CREDIT No. 5273 - NEP) Detailed Design of Kathmandu (Nagdhunga) - Naubise - Mugling Road and Bridges	Intercontinental Consultants & Technocrats Pvt.Ltd, A-8, Green Park, New Delhi - 110016 Ph : 4086-3000, Fax 2685-5252 In Joint Venture With Soosung Engineering Co. Ltd., South Korea	In Association With Full Bright Consultancy (Pvt.) Ltd. 316,Baburam Acharya Sadak, Sinamangal, Kathmandu, GPO Box: 4970, Kathmandu, Nepal	Prepared By		K.M.JOHRI	DRAWING TITLE: REINFORCEMENT DETAILS OF ABUTMENT DIRT WALL, RETURN WALL, PEDESTAL AND SEISMIC STOPPER FOR MAJOR BRIDGE AT CH:- 12+355KM PACKAGE-II	Scale:	Date: JUNE-2018
				Designed By		RAGHURAJ T.		As Shown	(SHEET 1 OF 3)
				Checked By		P.K.KHAN	Drawing No.:		
				Approved By		B.N.SINGH	NIRTTP/NAG-MUG/KHAHARE /SUB-02		

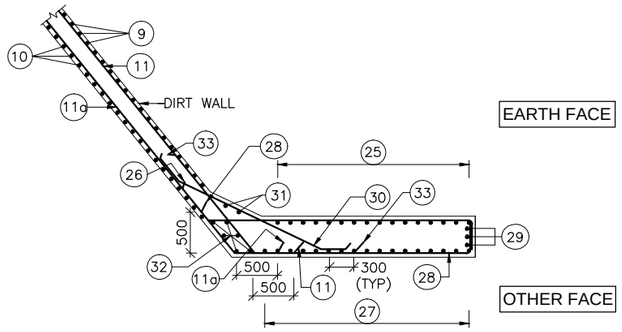

SECTION 7-7

JUNCTION DETAILS OF R.C.C. RETURN WALL & DIRT WALL

(SCALE 1:50)

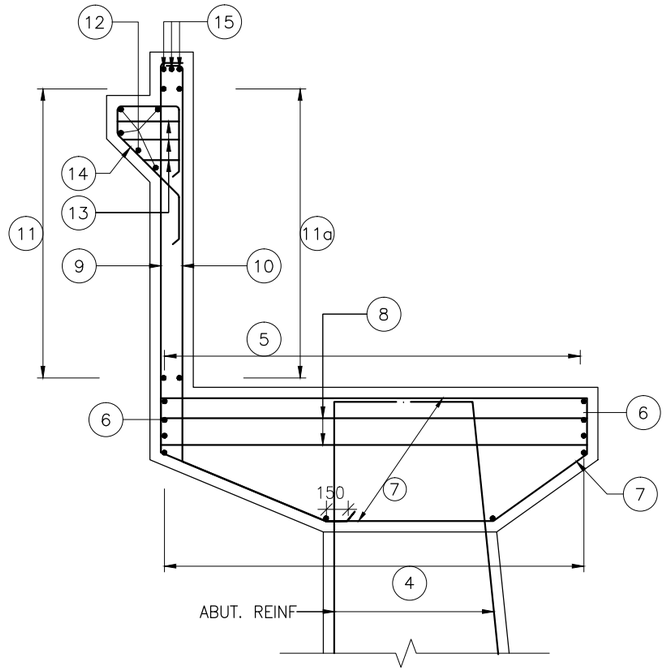

SECTION 5-5

(SCALE 1:40)

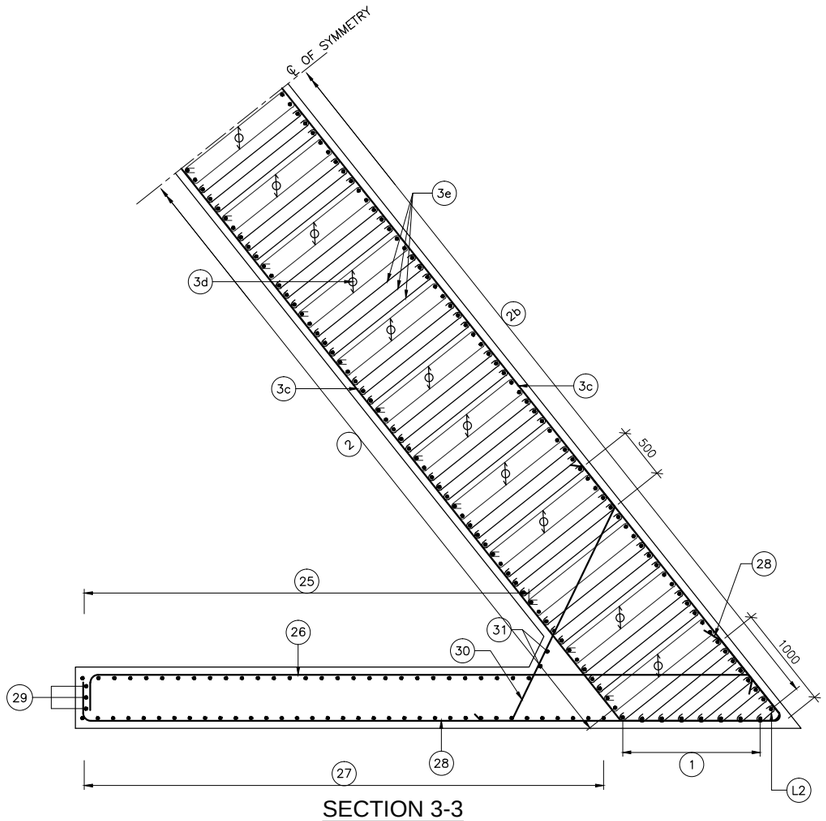

SECTION 3-3

(SCALE 1:40)

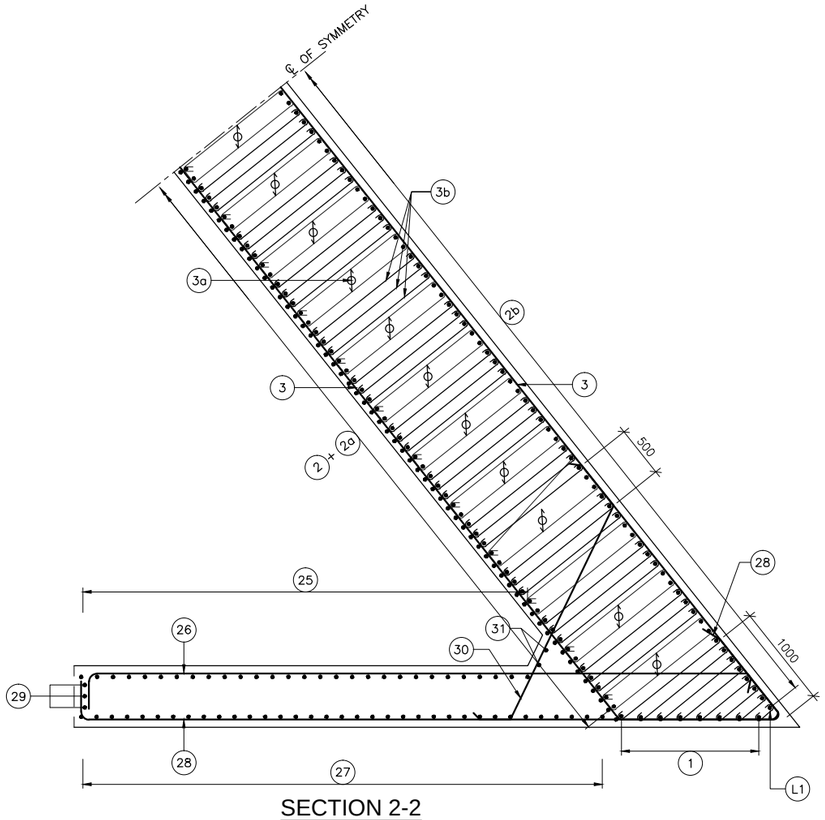

SECTION 2-2

(SCALE 1:40)

EMPLOYER	PROJECT	DESIGN CONSULTANT					
Government of Nepal Ministry of Physical Infrastructure and Transport, Department of Roads, Foreign Co-operation Branch	Nepal India Regional Trade and Transport Project (NIRTTP) (IDA CREDIT No. 5273 - NEP) Detailed Design of Kathmandu (Nagdhunga) - Naubise - Mugling Road and Bridges	Intercontinental Consultants & Technocrats Pvt.Ltd, A-8, Green Park, New Delhi - 110016 Ph : 4086-3000, Fax 2685-5252 In Joint Venture With Soosung Engineering Co. Ltd., South Korea	In Association With Full Bright Consultancy (Pvt.) Ltd. 316,Baburam Acharya Sadak, Sinamangal, Kathmandu, GPO Box: 4970, Kathmandu, Nepal	Prepared By		K.M.JOHRI	DRAWING TITLE: REINFORCEMENT DETAILS OF ABUTMENT DIRT WALL, RETURN WALL, PEDESTAL AND SEISMIC STOPPER FOR MAJOR BRIDGE AT CH:- 12+355KM PACKAGE-II	Scale:	Date: JUNE-2018
				Designed By		RAGHURAJ T.		As Shown	(SHEET 2 OF 3)
				Checked By		P.K.KHAN	Drawing No.:		
				Approved By		B.N.SINGH	NIRTTP/NAG-MUG/KHAHARE /SUB-02		

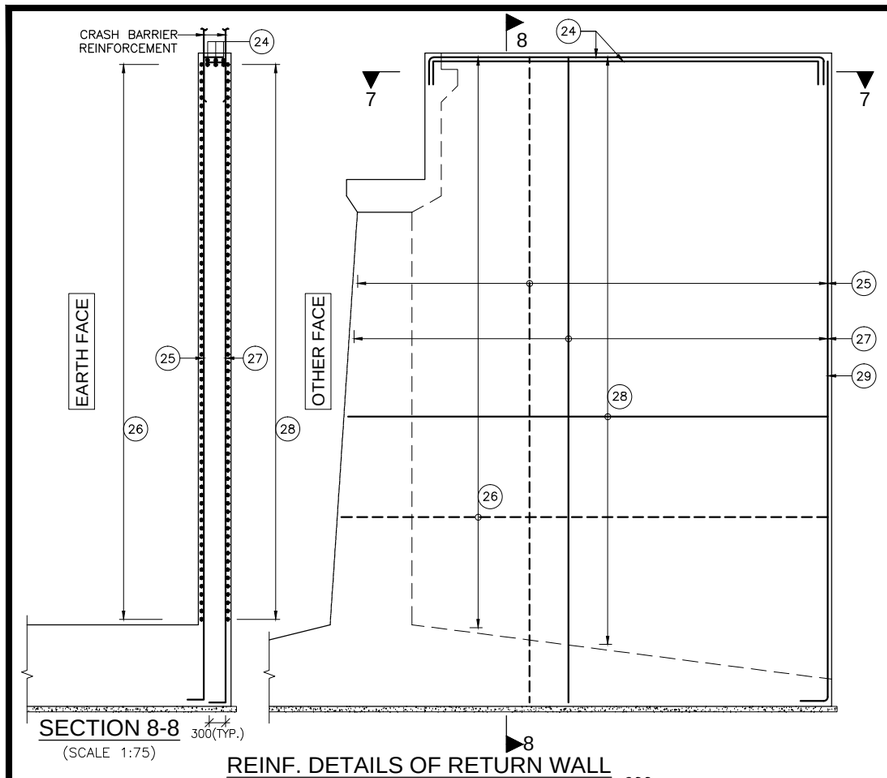

SECTION 8-8
(SCALE 1:75)

REINF. DETAILS OF RETURN WALL
(SCALE 1:75)

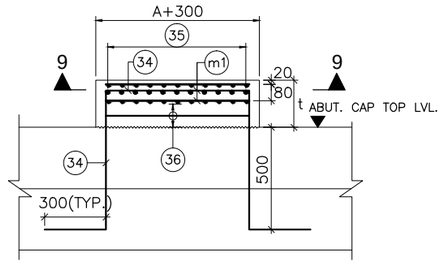

REINF. DETAILS OF PEDESTAL
(SCALE 1:20)
WHERE, A SIZE OF BEARING AND t IS HEIGHT OF PEDESTAL

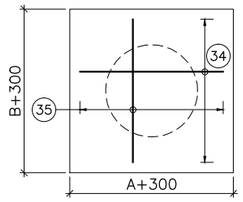

SECTION 9-9
(SCALE 1:20)
WHERE, A&B SIZE OF BEARING

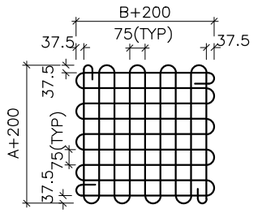

DETAIL OF MESH
TYPE "M1" 8ϕ
(IN PEDESTAL) (IN TWO LAYERS)
(SCALE 1:20)
(WHERE A & B SIZE OF BEARING)

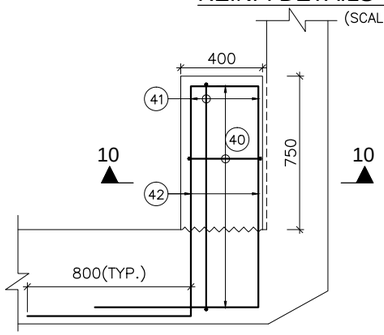

REINF. DETAILS OF LONGITUDINAL SEISMICSTOPPER
(SCALE 1:20)

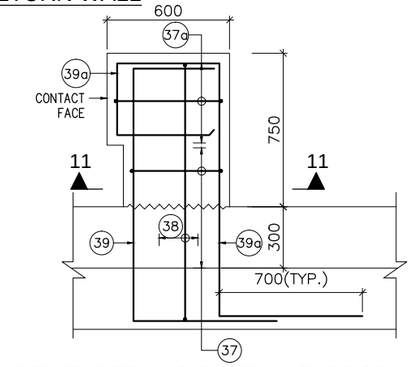

REINF. DETAILS OF TRANSVERSE SEISMIC STOPPER
(SCALE 1:20)

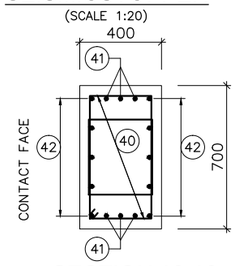

SECTION 10-10
(SCALE 1:20)
WHERE, A/B SIZE OF BEARING

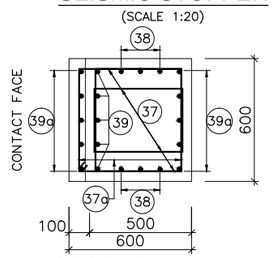

SECTION 11-11
(SCALE 1:20)

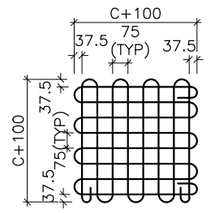

DETAIL OF MESH
TYPE "M2" 8ϕ
(UNDER JACK LOCATION)
(IN TWO LAYERS)
(SCALE 1:20)
(WHERE C= DIA OF JACK)

10	10ϕ @ 125 c/c	150 150		DIRT WALL AND BRACKET
11	10ϕ @ 100 c/c	150 150		
11a	10ϕ @ 100 c/c	150 450		
12	12ϕ –5 NOS.			
13	2L–12ϕ@ 100c/c	400 200	(3 LAYERS)	
14	12ϕ @ 100 c/c	400 300		
15	20ϕ –3 NOS.		(2 LAYERS)	
16	12ϕ –3 NOS.	300 300		
17	32ϕ @ 180 c/c	100 100		FOUNDATION
18	32ϕ @ 180 c/c	100		
19	16ϕ @ 100 c/c	LV. LV.		
20	16ϕ @ 100 c/c	LV. LV.		
21	16ϕ @ 180 c/c	100 100		
22	20ϕ @ 180 c/c	100		
23	12ϕ –2 Nos	300 300		
23a	12ϕ @ 200 c/c	300 300		
23b	22L–12ϕ@ 150c/c	360 400 360	STIRRUPS	
24	25ϕ –3 Nos.	500 500	IN 2 LAYERS	RETURN WALL
25	25ϕ @100c/c	300 300		
26	20ϕ @ 100c/c	300		
27	12ϕ @100c/c	300 300		
28	10ϕ @ 100c/c	300 500		
29	12ϕ –3 Nos.			
30	12ϕ @ 200c/c			
31	12ϕ –2 Nos.			
32	16ϕ –6 Nos.			
33	20ϕ @ 100c/c	1000 1000		
34	12ϕ @ 75c/c			RCC PEDESTAL
35	12ϕ @ 75c/c			
36	2L–12ϕ@ 150c/c		STRPS.	
37	4L–16ϕ@ 125c/c		STRPS.	TRANSVERSE SEISMIC STOPPER
37a	2L–12ϕ@ 125c/c		STRPS.	
38	16ϕ –3 Nos.		BOTH FACES	
39	32ϕ –10 Nos.		BOTH FACES	
39a	25ϕ –5 Nos.		BOTH FACES	
40	4L–12ϕ@ 125c/c		STRPS.	LONGITUDINAL SEISMIC STOPPER
41	20ϕ –3 Nos.		BOTH FACES	
42	32ϕ –8 Nos.		BOTH FACES	

NOTES :-

1. ALL DIMENSIONS ARE IN MM, UNLESS OTHERWISE MENTIONED.
2. ONLY WRITTEN DIMENSIONS ARE TO BE FOLLOWED AND NO DIMENSION SHALL BE SCALED.
3. CONCRETE SHALL BE DESIGN MIX WITH A MINIMUM 28 DAYS CHARACTERISTIC STRENGTH ON 150mm CUBE AS FOLLOWS:
   a. LEVELING COURSE (UNDER FOUNDATION) – 10MPa
   b. LEVELING COURSE (UNDER APPROACH SLAB) – 15MPa
   c. FOUNDATION – 30MPa
   d. SUBSTRUCTURE – 00MPa
   e. APPROACH SLAB – 30MPa
   f. PEDESTAL – 40MPa
   g. SEISMIC STOPPER – 40MPa
4. UNTENSIONED REINFORCEMENT SHALL BE THERMO MECHANICALLY TREATED (TMT), HYSD BARS OF GRADE DESIGNATION Fe–500D CONFORMING TO IS: 1786.
5. MINIMUM CLEAR COVER TO OUTER MOST REINFORCEMENT SHALL BE AS UNDER:–
   a. SUBSTRUCTURE (EARTH FACE) – 75MM
   b. SUBSTRUCTURE (NON EARTH FACE) – 50MM
   c. FOUNDATION – 75MM
6. LL REPRESENTS LONGITUDINAL AXIS OF BRIDGE AND TT REPRESENTS TRANSVERSE AXIS OF ABUTMENT/FOUNDATION.
7. MINIMUM ANCHORAGE LENGTH OF REINFORCEMENT FOR FAVOURABLE CONDITION SHALL BE AS UNDER:
   CONCRETE GRADE – M–30 – 40 x DIA OF BAR
   CONCRETE GRADE – M–40 – 34 x DIA OF BAR
   (WHERE DIA OF BAR < = 32MM.)
   FOR UNFAVOURABLE CONDITION THESE VALUES SHALL BE MULTIPLIED BY 1.43.
8. MINIMUM LAP LENGTH OF REINFORCEMENT FOR FAVOURABLE CONDITION SHALL BE AS UNDER:
   CONCRETE GRADE – M–30 – 56 x DIA OF BAR
   CONCRETE GRADE – M–40 – 48 x DIA OF BAR
9. THIS DRAWING SHALL BE READ IN CONJUNCTION WITH THE FOLLOWING DRGS.
   - GENERAL ARRANGEMENT DRAWING REFER DRG. NO. : NIRTTP/NAG–MUG/KHAHARE/GAD
   - DIMENSIONAL DETAILS OF ABUTMENT AND FOUNDATION REFER DRG. NO. : NIRTTP/NAG–MUG/KHAHARE/SUB–01

BAR SHAPE SCHEDULE

BAR MRKD.	DESCRIPTION	BAR SHAPE	REMARKS	
1	16ϕ –12 NOS.	300 300	EACH FACE	ABUTMENT SHAFT
2	32ϕ –80 NOS.	300 300	1st LAYER	
2a	32 –80 NOS.	300 300	2nd LAYER	
2b	25ϕ –80 NOS.	300 300		
3	16ϕ @ 100c/c			
3a	30L–8ϕ @ 100c/c			
3b	42LINK8 ϕ@100 c/c			
3c	16ϕ @ 200c/c			
3d	30L–8ϕ @ 200c/c			
3e	42LINK8 ϕ@200 c/c			
L1	8LINK8 ϕ @100 c/c			
L2	8LINK8 ϕ @200 c/c			
4	16ϕ –10 NOS.	300 300		ABUTMENT CAP
5	16ϕ –10 NOS.	500 500		
6	12ϕ –1 NO.	300 300	EACH FACE	
7	2L–20ϕ@ 125c/c		STIRRUPS	
8	2L–12ϕ @ 200c/c	300	IN 2 LAYERS	
9	20ϕ @ 125 c/c	150		

LEGEND

- - - - - - - EARTH FACE/BOTTOM FACE
——————— NON EARTH FACE/TOP FACE

EMPLOYER	PROJECT	DESIGN CONSULTANT
Government of Nepal Ministry of Physical Infrastructure and Transport, Department of Roads, Foreign Co-operation Branch	Nepal India Regional Trade and Transport Project (NIRTTP) (IDA CREDIT No. 5273 - NEP) Detailed Design of Kathmandu (Nagdhunga) - Naubise - Mugling Road and Bridges	Intercontinental Consultants & Technocrats Pvt.Ltd, A-8, Green Park, New Delhi - 110016 Ph : 4086-3000, Fax 2685-5252 In Joint Venture With Soosung Engineering Co. Ltd., South Korea In Association With Full Bright Consultancy (Pvt.) Ltd. 316,Baburam Acharya Sadak, Sinamangal, Kathmandu, GPO Box: 4970, Kathmandu, Nepal

Prepared By		K.M.JOHRI
Designed By		RAGHURAJ T.
Checked By		P.K.KHAN
Approved By		B.N.SINGH

DRAWING TITLE:
REINFORCEMENT DETAILS OF ABUTMENT DIRT WALL, RETURN WALL, PEDESTAL AND SEISMIC STOPPER FOR MAJOR BRIDGE AT CH:- 12+355KM PACKAGE-II

Drawing No.: NIRTTP/NAG-MUG/KHAHARE /SUB-02

Scale: As Shown

Date: JUNE-2018

(SHEET 3 OF 3)

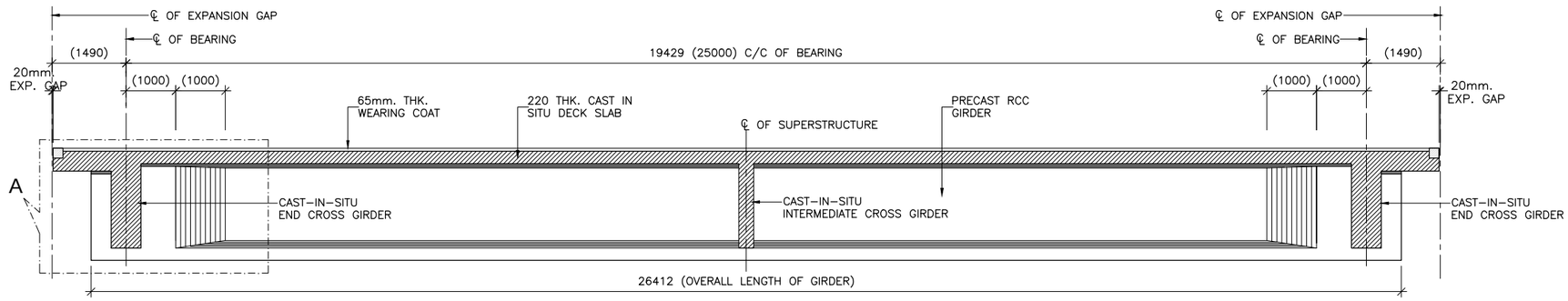

SECTIONAL ELEVATION 1 - 1

(SCALE 1:75)

NOTES:-

1. ALL DIMENSIONS ARE IN mm UNLESS OTHERWISE MENTIONED. ONLY WRITTEN DIMENSIONS ARE TO BE FOLLOWED. NO DIMENSIONS SHALL BE SCALED.
3. THE BRIDGE HAS BEEN DESIGNED FOR TWO LANE TRAFFIC FOR LIVE LOAD COMBINATIONS OF CLASS A AND 70R WITH FOOTPATH LIVE LOAD. OR IRC SV VEHICLE WITH FOOTPATH LIVE LOAD. OR THREE LANE TRAFFIC FOR LIVE LOAD COMBINATIONS OF CLASS A AND 70R WITHOUT FOOTPATH LIVE LOAD AS PER IRC:6–2017, WHICHEVER GOVERNS.
4. CONCRETE SHALL BE DESIGN MIX WITH A MINIMUM 28 DAYS CHARACTERISTIC STRENGTH ON 150mm CUBES AS FOLLOWS :–
   PRECAST RCC GIRDER + RCC CAST IN SITU DECK SLAB–40 MPa
6. UNTENSIONED REINFORCEMENT SHALL BE THERMO MECHANICALLY TREATED (TMT), HYSD BARS OF GRADE DESIGNATION Fe–500D CONFORMING TO IS: 1786.
7. CLEAR COVER TO OUTER MOST STEEL SHALL BE AS UNDER:–
   FOR SUPER STRUCTURE–40mm.
8. 65mm. THK. WEARING COURSE COMPRISING OF 40mm THK. BITUMINOUS CONCRETE OVER LAID WITH 25mm THK. MASTIC ASPHALT SHALL BE PROVIDED AS PER SECTION 500 OF MORTH SPECIFICATIONS.
9. FOR LIFTING OF THE SUPERSTRUCTURE 2Nos. OF FREYSSINET JACKS OF CAPACITY **165t** EACH MAY BE REQUIRED AT EACH END. THE LOCATION OF JACKS FOR LIFTING OF THE SUPERSTRUCTURES TO REPLACE BEARINGS ETC. IS SHOWN ⬆ THUS THIS SHALL BE DISTINCTLY ETCHED FOR EASY IDENTIFICATION ON THE ABUTMENT CAPS
10. DURING THE LIFTING OPERATION OF SUPERSTRUCTURE ALL THE JACKS PLACED UNDER THE END DIAPHRAGM IN LINE WITH THE BEARINGS SHALL BE OPERATED SIMULTANEOUSLY USING SINGLE OPERATING CONSOLE, GROUPING THE PUMP AND CONTROL SYSTEM SO AS TO ENSURE THAT THE REACTIONS ON ALL THE JACKS ARE EQUAL AT ALL TIMES.
11. PRECAST GIRDERS SHALL BE CAST IN ONE CONCRETING OPERATION IN CASTING YARD WITHOUT ANY CONSTRUCTION JOINT.
12. EACH PRECAST GIRDER WILL BE LIFTED BY USING LIFTING STRANDS AT EITHER END. DURING LIFTING, GIRDER SHALL BE KEPT PLUMB AND UPRIGHT SELF WEIGHT OF GIRDER IS **560kN.**

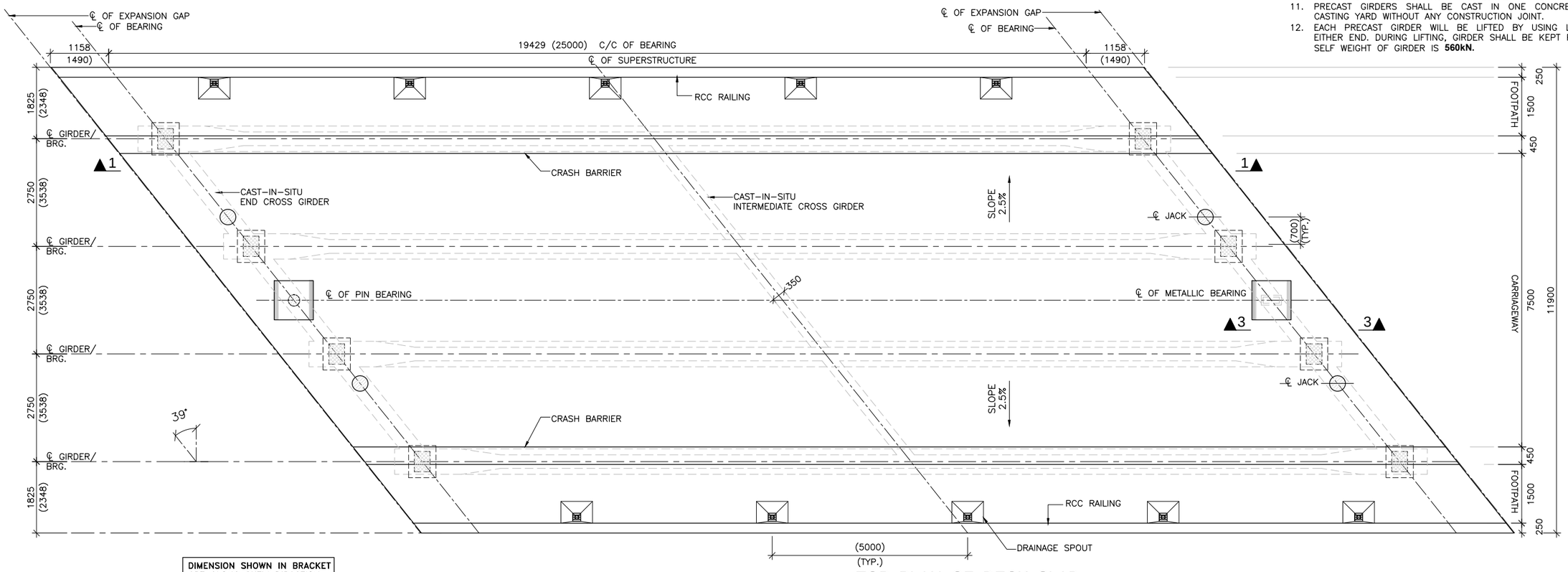

DIMENSION SHOWN IN BRACKET ARE ALONG SKEW DIRACTION

TOP PLAN OF DECK SLAB

(SCALE 1:75)

LEGEND:-

- CAST–IN–SITU PORTION
- JACK LOCATION IN PLAN
- JACK LOCATION IN ELEVATION

EMPLOYER	PROJECT	DESIGN CONSULTANT					
Government of Nepal Ministry of Physical Infrastructure and Transport, Department of Roads, Foreign Co-operation Branch	Nepal India Regional Trade and Transport Project (NIRTTP) (IDA CREDIT No. 5273 - NEP) Detailed Design of Kathmandu (Nagdhunga) - Naubise - Mugling Road and Bridges	Intercontinental Consultants & Technocrats Pvt.Ltd, A-8, Green Park, New Delhi - 110016 Ph : 4086-3000, Fax 2685-5252 In Joint Venture With Soosung Engineering Co. Ltd., South Korea	In Association With Full Bright Consultancy (Pvt.) Ltd. 316,Baburam Acharya Sadak, Sinamangal, Kathmandu, GPO Box: 4970, Kathmandu, Nepal	Prepared By		K.M.JOHRI	DRAWING TITLE: DIMENSION DETAILS OF PRECAST RCC GIRDER & CAST-IN-SITU SLAB SUPERSTRUCTURE 25.00m C/C EXP. JOINT OVER KHAHARE KHOLA (PACKAGE-II)	Scale: As Shown	Date: JUNE-2018
				Designed By		RAGHURAJ T.			
				Checked By		P.K.KHAN	Drawing No.:		
				Approved By		B.N.SINGH	NIRTTP/NAG-MUG/12+355/RCC_G/25.00m/ 01/R0		(SHEET 1 OF 2)

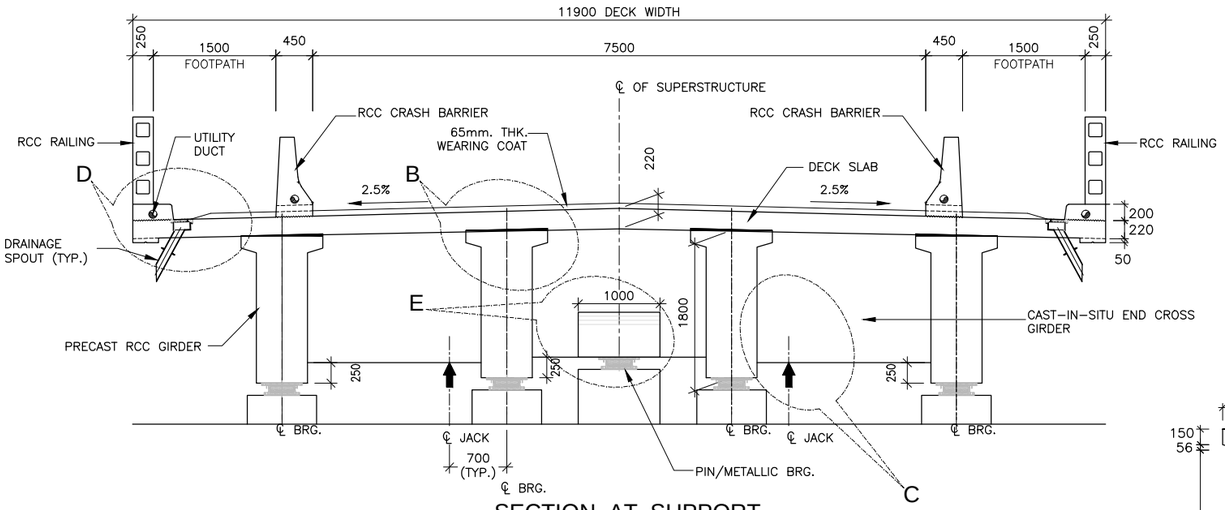

SECTION AT SUPPORT
(SCALE 1:50)

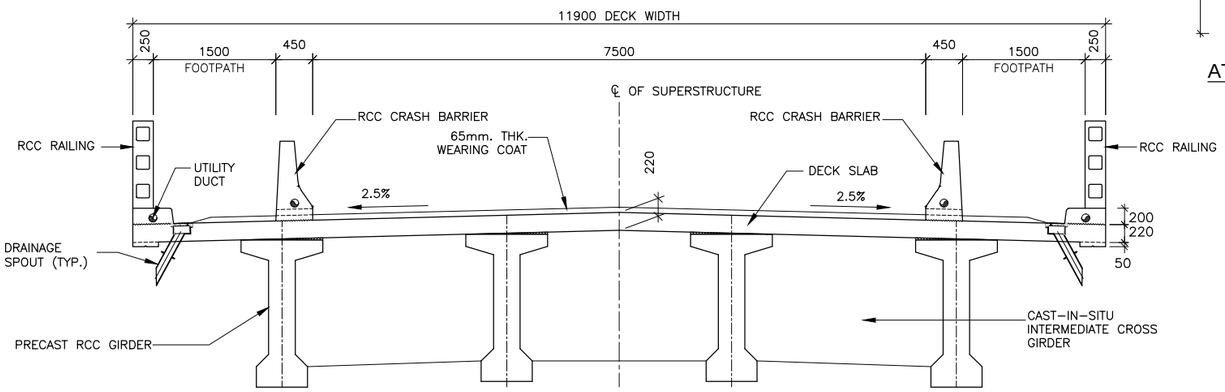

SECTION AT MID
(SCALE 1:50)

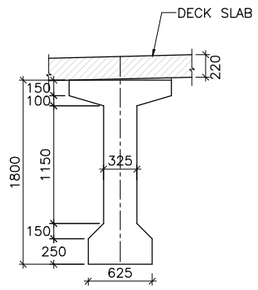

AT MID SPAN

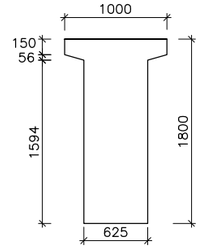

AT SUPPORT

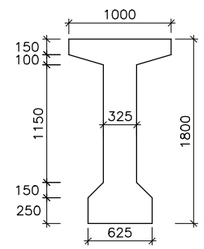

AT MID SPAN

DETAILS OF PRECAST RCC GIRDER
(SCALE 1:40)

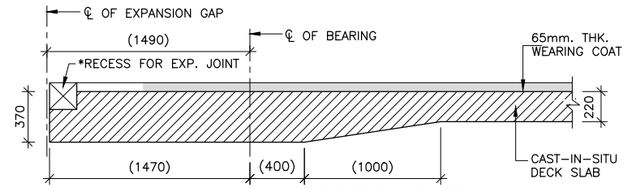

SECTION 2 - 2
(SCALE 1:30)

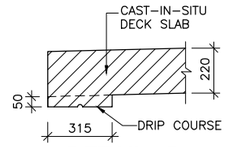

DETAIL - D
(SCALE 1:20)

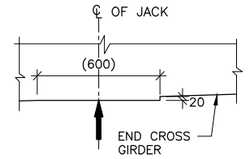

DETAIL - C
DETAIL OF CROSS GIRDER AT JACK LOCATION
(SCALE 1:20)

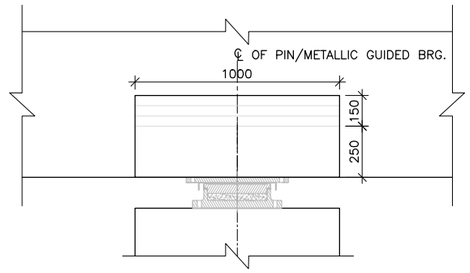

DETAIL - E
(SCALE 1:20)

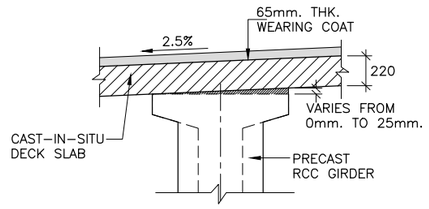

DETAIL -B
(SCALE 1:30)

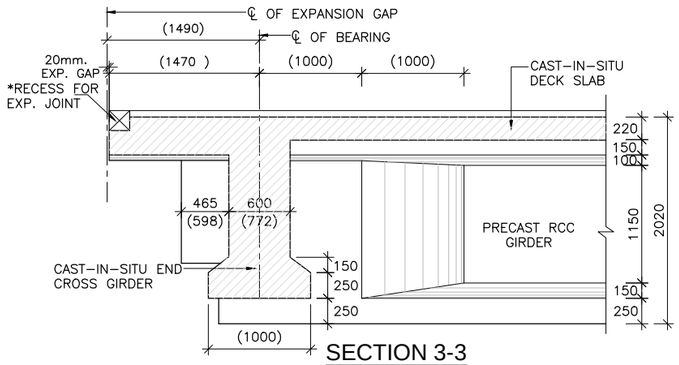

SECTION 3-3
(SCALE 1:40)

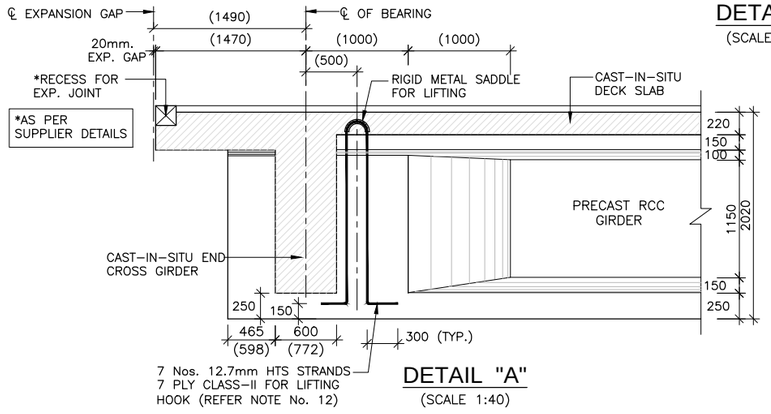

DETAIL "A"
(SCALE 1:40)

SEQUENCE OF CONSTRUCTION:-

AGE OF GIRDER (IN DAYS)	ACTIVITY	STRENGTH OF CONC. (IN MPa)
0	CASTING OF LONGITUDINAL GIRDER AT CASTING YARD WITH PORTION OF DIAPHRAGM	–
14 to 28	POSITION OF LONGITUDINAL GIRDER ON TEMPORARY BRGS. AND HOLD THEM IN POSITION BY LATERAL BRACING. REINF. OF DECK SLAB & END DIAPHRAGM WILL BE FIXED IN POSITION	30
28	CASTING OF DECK SLAB ALONG WITH CROSS GIRDER	40
28 to 42	AVERAGE AGE OF GIRDER WHEN COMPOSITE ACTION TAKES PLACE	40
42 to 56	FIXING THE CRASH BARRIER AND LAYING OFWEARING COAT	40
56	AVERAGE AGE OF GIRDER WHEN SILD & CWLL ON IT	40

REFERENCE DRAWINGS:-

i). REINFORCEMENT DETAILS OF LONGITUDINAL GIRDER
NIRTTP/NAG-MUG/ 12+355/RCC_G/25.00m/02/R0
ii). REINFORCEMENT DETAILS OF CROSS GIRDER
NIRTTP/NAG-MUG/ 12+355/RCC_G/25.00m/03/R0
iii). REINFORCEMENT DETAILS OF RCC DECK SLAB
NIRTTP/NAG-MUG/ 12+355/RCC_G/25.00m/04/R0
iv). BEARING FORCE AND LAYOUT
NIRTTP/NAG-MUG/ 12+355/RCC_G/25.00m/05/R0

EMPLOYER	PROJECT	DESIGN CONSULTANT					
Government of Nepal Ministry of Physical Infrastructure and Transport, Department of Roads, Foreign Co-operation Branch	Nepal India Regional Trade and Transport Project (NIRTTP) (IDA CREDIT No. 5273 - NEP) Detailed Design of Kathmandu (Nagdhunga) - Naubise - Mugling Road and Bridges	Intercontinental Consultants & Technocrats Pvt.Ltd, A-8, Green Park, New Delhi - 110016 Ph : 4086-3000, Fax 2685-5252 In Joint Venture With Soosung Engineering Co. Ltd., South Korea	In Association With Full Bright Consultancy (Pvt.) Ltd. 316,Baburam Acharya Sadak, Sinamangal, Kathmandu, GPO Box: 4970, Kathmandu, Nepal	Prepared By	K.M.JOHRI	DRAWING TITLE: DIMENSION DETAILS OF PRECAST RCC GIRDER & CAST-IN-SITU SLAB SUPERSTRUCTURE 25.00m C/C EXP. JOINT OVER KHAHARE KHOLA (PACKAGE-II)	Scale: As Shown	Date: JUNE-2018
				Designed By	RAGHURAJ T.			
				Checked By	P.K.KHAN	Drawing No.: NIRTTP/NAG-MUG/12+355/RCC_G/25.00m/ 01/R0		(SHEET 2 OF 2)
				Approved By	B.N.SINGH			

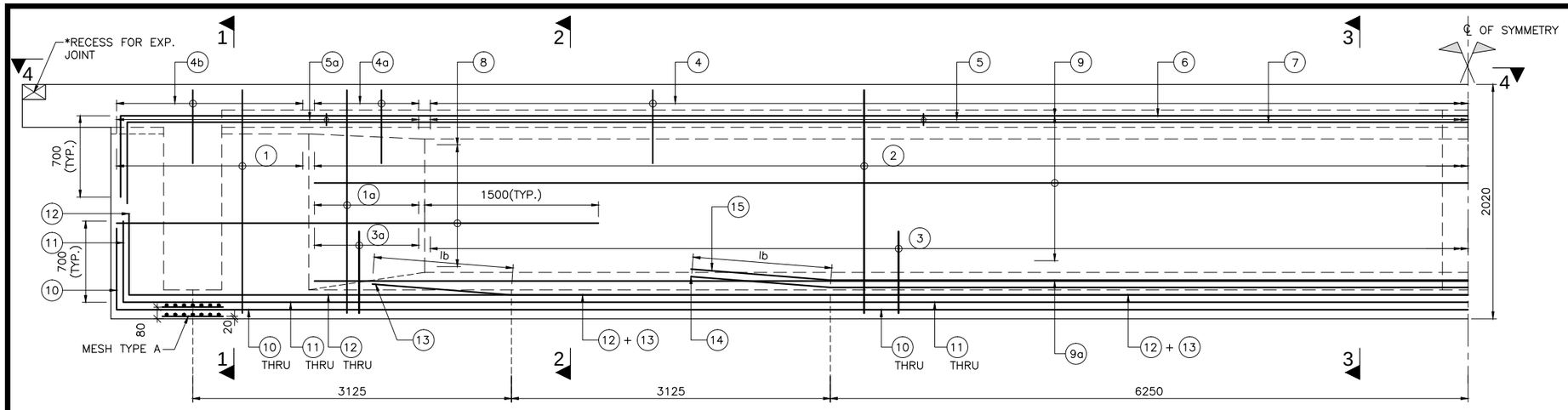

SECTIONAL ELEVATION OF GIRDER

(SCALE 1:30)

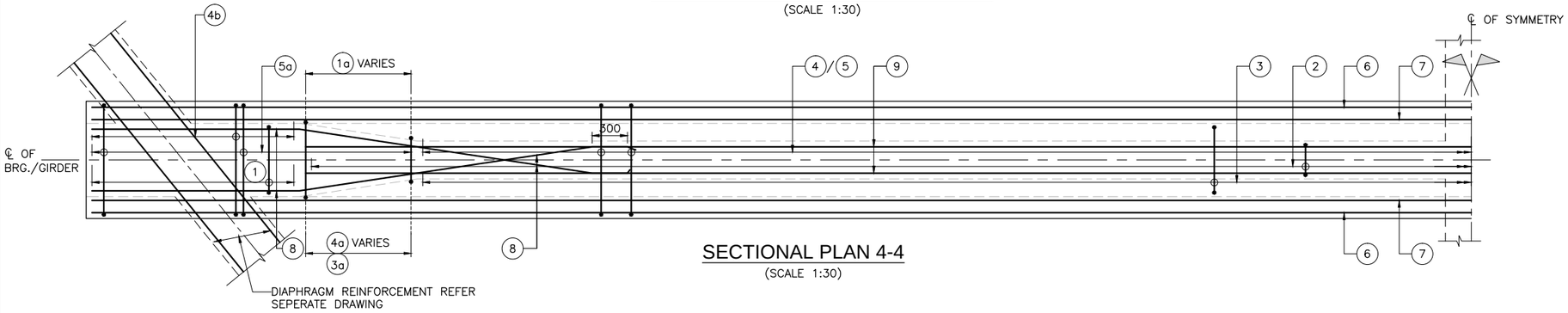

SECTIONAL PLAN 4-4

(SCALE 1:30)

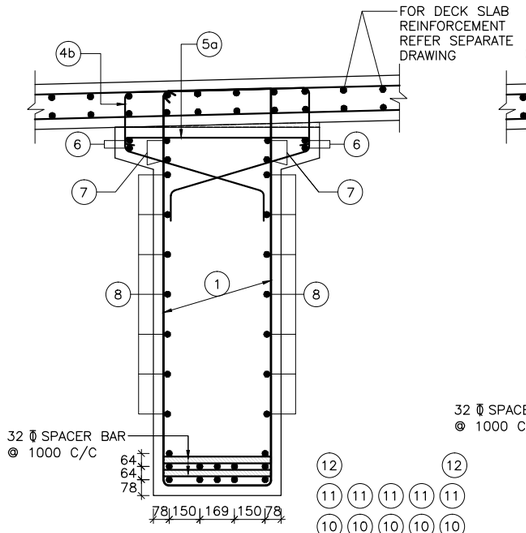

SECTION - 1-1

(SCALE 1:20)

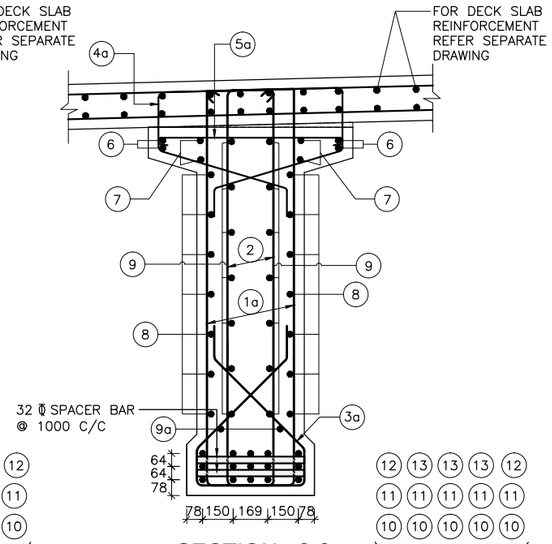

SECTION - 2-2

(SCALE 1:20)

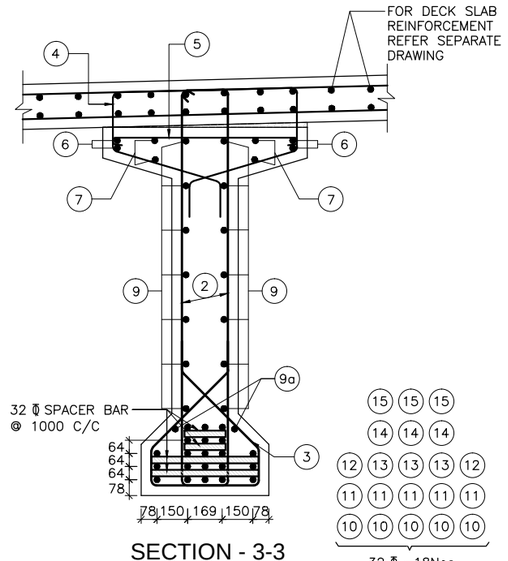

SECTION - 3-3

(SCALE 1:20)

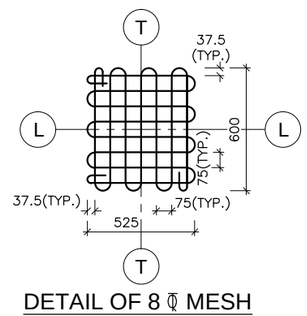

DETAIL OF 8 ϕ MESH TYPE "A"

(IN TWO LAYERS)
(SCALE = 1:20)

NOTES:-

1. ALL DIMENSIONS ARE IN MILLIMETERS AND LEVELS ARE IN METERS UNLESS OTHERWISE SPECIFIED.
2. DIMENSIONS ARE NOT TO BE SCALED. ONLY WRITTEN DIMENSIONS SHALL BE FOLLOWED.
6. UNTENSIONED REINFORCEMENT SHALL BE THERMO MECHANICALLY TREATED (TMT), HYSD BARS OF GRADE DESIGNATION Fe–500D CONFORMING TO IS: 1786.
7. CLEAR COVER TO THE OUTERMOST STEEL SHALL BE 40mm UNLESS OTHERWISE SPECIFIED.
8. LAPPING OF REINFORCEMENT SHALL BE AVOIDED AS FAR AS POSSIBLE. IN CASE LAPPING OF BARS BECOMES UNAVOIDABLE, MINIMUM LAP LENGTH OF REINFORCEMENT BARS SHALL BE CALCULATED AS FOLLOW WITH MAXIMUM ALLOWABLE LAPPING (p) OF 50% ONLY. (IRC:112–2011) (CLAUSE:15.2.5.1)
   LAP LENGTH ls = α_1.lbnet
   α_1 = 1.0 FOR p%≤25%
   α_1 = 1.15 FOR 25%≤p%≤33%
   α_1 = 1.4 FOR 33%≤p%≤50%
   (IRC:112–2011) (CLAUSE:15.2.3.3)
   DEVELOPMENT LENGTH (lbnet)
   lbnet = α.lb (α = 1.0)
   lb = kϕ
   k = 40 FOR M30 (Fe500D)
   k = 36 FOR M35 (Fe500D)
   k = 34 FOR M40 (Fe500D)
   FOR UNFAVORABLE BOND CONDITION THE lb SHOULD BE MULTIPLIED BY FACTOR OF 1.43. FOR ϕ>32mm lb, SHOULD BE INCREASED BY MULTIPLYING FACTOR ($\frac{100}{132-\phi}$)

REFERENCE DRAWINGS:-

i). DIMENSIONAL DETAILS OF LONGITUDINAL GIRDER NIRTTP/NAG–MUG/ 12+355/RCC_G/25.00m/01/R0 (SHEET1&2)
ii). REINFORCEMENT DETAILS OF CROSS GIRDER NIRTTP/NAG–MUG/ 12+355/RCC_G/25.00m/03/R0
iii). REINFORCEMENT DETAILS OF RCC DECK SLAB NIRTTP/NAG–MUG/ 12+355/RCC_G/25.00m/04/R0
iv). BEARING FORCE AND LAYOUT NIRTTP/NAG–MUG/ 12+355/RCC_G/25.00m/05/R0

SCHEDULE OF REINFORCEMENT

BAR MKD.	DESCRIPTION	SHAPE	REMARKS
1	2L–12 ϕ @125 C/C		STIRRUP
1a	2L–12 ϕ @125 C/C		STIRRUP (VARIES)
2	2L–12 ϕ @150 C/C		STIRRUP
3	10 ϕ @150 C/C		
3a	10 ϕ @125 C/C		(VARIES)
4	10 ϕ @150 C/C		
4a	10 ϕ @125 C/C		(VARIES)
4b	10 ϕ @125 C/C		
5	10 ϕ @150 C/C		LINKS
5a	10 ϕ @125 C/C		LINKS
6	12 ϕ –4 Nos.		
7	12 ϕ –4 Nos.		
8	10 ϕ –7 Nos.		ON EACH FACE
9	10 ϕ –7 Nos.		ON EACH FACE
9a	10 ϕ –1 Nos.		ON EACH FACE
10	32 ϕ –5 Nos.		
11	32 ϕ –5 Nos.		
12	32 ϕ –2 Nos.		
13	32 ϕ –3 Nos.		
14	32 ϕ –3 Nos.		
15	32 ϕ –3 Nos.		

EMPLOYER	PROJECT	DESIGN CONSULTANT				
Government of Nepal Ministry of Physical Infrastructure and Transport, Department of Roads, Foreign Co-operation Branch	Nepal India Regional Trade and Transport Project (NIRTTP) (IDA CREDIT No. 5273 - NEP) Detailed Design of Kathmandu (Nagdhunga) - Naubise - Mugling Road and Bridges	Intercontinental Consultants & Technocrats Pvt.Ltd, A-8, Green Park, New Delhi - 110016 Ph : 4086-3000, Fax 2685-5252 In Joint Venture With Soosung Engineering Co. Ltd., South Korea	In Association With Full Bright Consultancy (Pvt.) Ltd. 316,Baburam Acharya Sadak, Sinamangal, Kathmandu, GPO Box: 4970, Kathmandu, Nepal	Prepared By	K.M.JOHRI	DRAWING TITLE: REINFORCEMENT DETAILS OF LONGITUDINAL GIRDER EFFECTIVE SPAN : 25.00m (PACKAGE-II)
				Designed By	RAGHURAJ T.	
				Checked By	P.K.KHAN	Drawing No.:
				Approved By	B.N.SINGH	NIRTTP/NAG-MUG/12+355/RCC_G/25.00m/ 02/R0

Scale: As Shown

Date: JUNE-2018

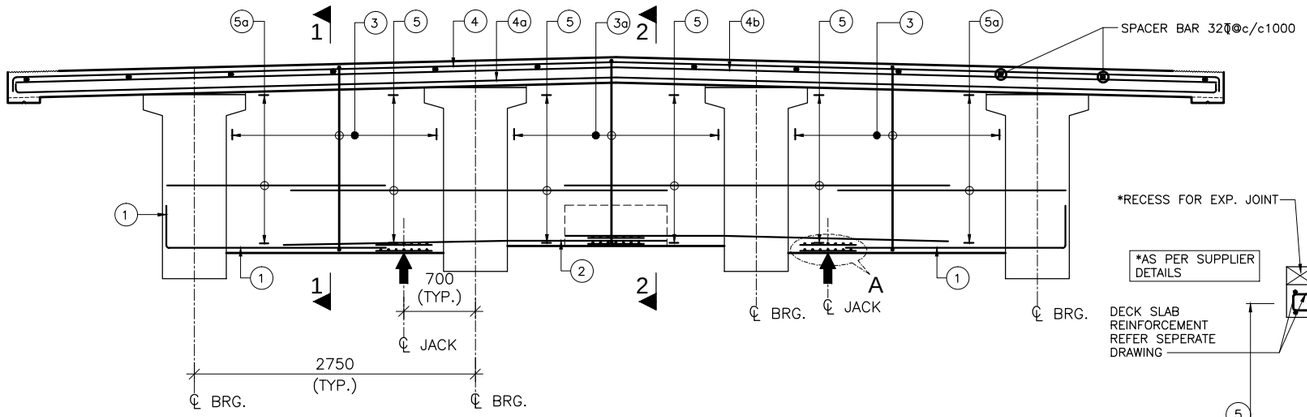

SECTIONAL ELEVATION OF END CROSS GIRDER

(SCALE 1:40)

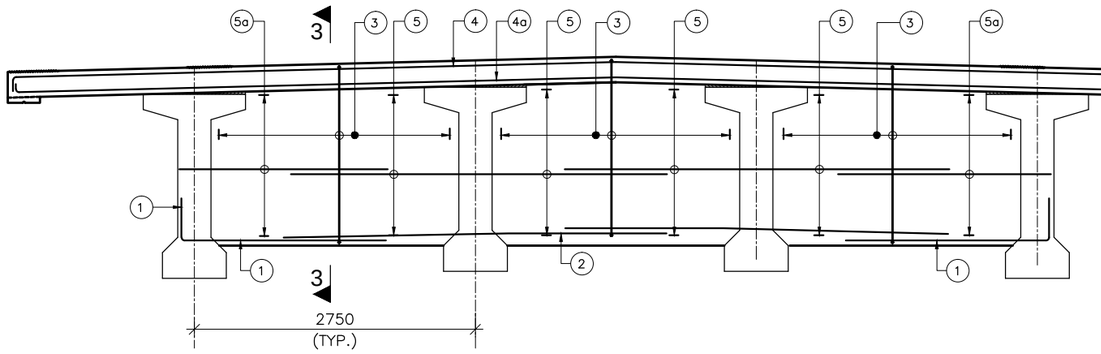

SECTIONAL ELEVATION OF INTERMEDIATE CROSS GIRDER

(SCALE 1:40)

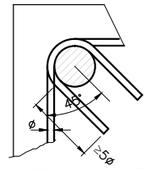

TYPICAL DETAIL INDICATING ANCHORAGE OF STIRRUP

(SCALE 1:30)

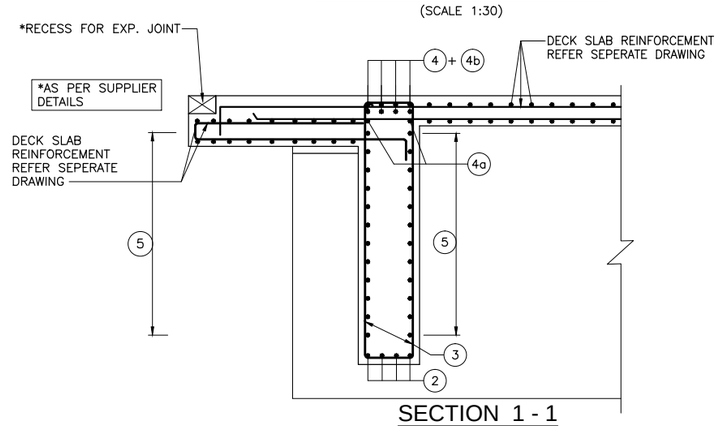

SECTION 1 - 1

(SCALE 1:30)

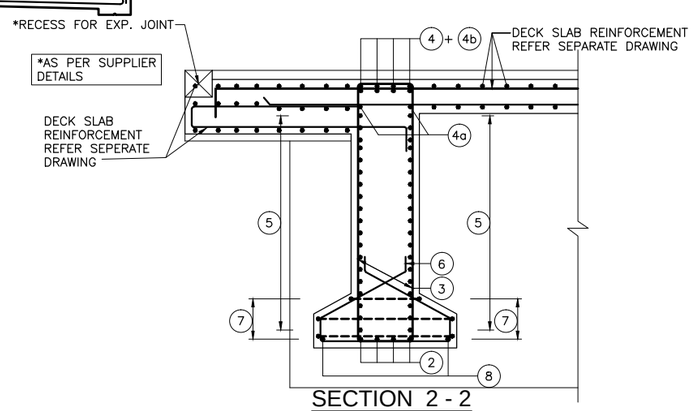

SECTION 2 - 2

(SCALE 1:30)

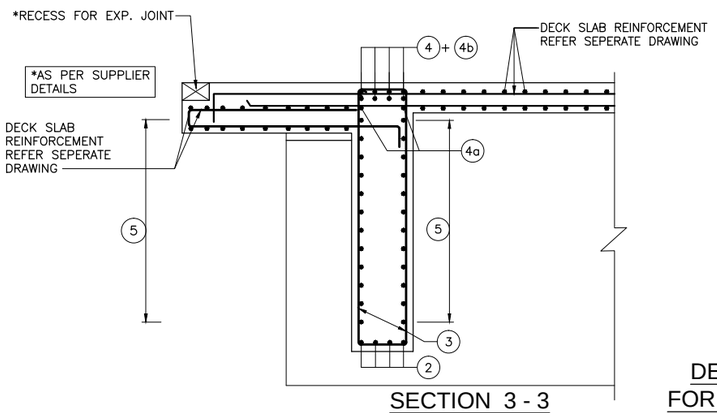

SECTION 3 - 3

(SCALE 1:30)

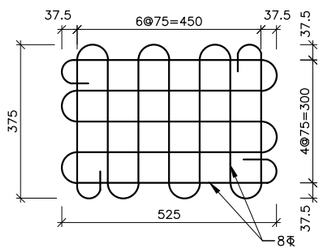

DETAIL OF 8ϕ MESH (M1) REINF. FOR JACK LOCATION

(SCALE 1:10)

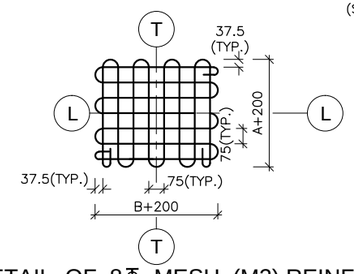

DETAIL OF 8ϕ MESH (M2) REINF. FOR PIN / METALLIC GUIDED BEARING

WHERE A & B ARE SIZE OF BEARING

(SCALE 1:20)

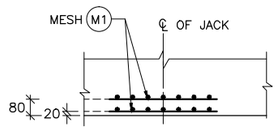

DETAIL - A

(SCALE 1:20)

NOTES:-

1. ALL DIMENSIONS ARE IN MILLIMETERS AND LEVELS ARE IN METERS UNLESS OTHERWISE SPECIFIED.
2. DIMENSIONS ARE NOT TO BE SCALED. ONLY WRITTEN DIMENSIONS SHALL BE FOLLOWED.
6. UNTENSIONED REINFORCEMENT SHALL BE THERMO MECHANICALLY TREATED (TMT), HYSD BARS OF GRADE DESIGNATION Fe–500D CONFORMING TO IS: 1786.
7. CLEAR COVER TO THE OUTERMOST STEEL SHALL BE 40mm UNLESS OTHERWISE SPECIFIED.
8. LAPPING OF REINFORCEMENT SHALL BE AVOIDED AS FAR AS POSSIBLE. IN CASE LAPPING OF BARS BECOMES UNAVOIDABLE, MINIMUM LAP LENGTH OF REINFORCEMENT BARS SHALL BE CALCULATED AS FOLLOW WITH MAXIMUM ALLOWABLE LAPPING (p) OF 50% ONLY. (IRC:112–2011) (CLAUSE:15.2.5.1)
   LAP LENGTH ls = α1.lbnet
   α1 = 1.0 FOR p%≤25%
   α1 = 1.15 FOR 25%≤p%≤33%
   α1 = 1.4 FOR 33%≤p%≤50%
   (IRC:112–2011) (CLAUSE:15.2.3.3)
   DEVELOPMENT LENGTH (lbnet)
   lbnet = α.lb (α = 1.0)
   lb = kϕ
   k = 40 FOR M30 (Fe500D)
   k = 36 FOR M35 (Fe500D)
   k = 34 FOR M40 (Fe500D)

FOR UNFAVORABLE BOND CONDITION THE lb SHOULD BE MULTIPLIED BY FACTOR OF 1.43. FOR ϕ>32mm lb, SHOULD BE INCREASED BY MULTIPLYING FACTOR $(\frac{100}{132-\phi})$

REFERENCE DRAWINGS:-

i). DIMENSIONAL DETAILS OF LONGITUDINAL GIRDER
NIRTTP/NAG–MUG/ 12+355/RCC_G/25.00m/01/R0 (SHEET1&2)
ii). REINFORCEMENT DETAILS OF LONGITUDINAL GIRDER
NIRTTP/NAG–MUG/ 12+355/RCC_G/25.00m/02/R0
iii). REINFORCEMENT DETAILS OF RCC DECK SLAB
NIRTTP/NAG–MUG/ 12+355/RCC_G/25.00m/04/R0
iv). BEARING FORCE AND LAYOUT
NIRTTP/NAG–MUG/ 12+355/RCC_G/25.00m/05/R0

REINFORCEMENT SCHEDULE FOR END DIAPHRAGM

BAR MKD.	DESCRIPTION	SHAPE	REMARKS
1	25ϕ –4 Nos.		
2	25ϕ –4 Nos.		
3	25ϕ –2L @125 c/c		
3a	25ϕ –2L @125 c/c		
4	25ϕ –4 Nos.		
4a	16ϕ –2 Nos.		
4b	25ϕ –4 Nos.		
5	25ϕ –14 Nos.		(ON EACH FACE)
5a	16ϕ –14 Nos.		(ON EACH FACE)
6	12ϕ –7 Nos.		
7	12ϕ –3 Nos.		
8	10ϕ –2 Nos.		

REINFORCEMENT SCHEDULE FOR INTERMEDIATE DIAPHRAGM

BAR MKD.	DESCRIPTION	SHAPE	REMARKS
1	32ϕ –4 Nos.		
2	32ϕ –4 Nos.		
3	12ϕ –2L @150 c/c		
4	16ϕ –4 Nos.		
4a	12ϕ –2 Nos.		
5	12ϕ –12 Nos.		(ON EACH FACE)
5a	12ϕ –12 Nos.		(ON EACH FACE)

EMPLOYER	PROJECT	DESIGN CONSULTANT				
Government of Nepal Ministry of Physical Infrastructure and Transport, Department of Roads, Foreign Co-operation Branch	Nepal India Regional Trade and Transport Project (NIRTTP) (IDA CREDIT No. 5273 - NEP) Detailed Design of Kathmandu (Nagdhunga) - Naubise - Mugling Road and Bridges	Intercontinental Consultants & Technocrats Pvt.Ltd, A-8, Green Park, New Delhi - 110016 Ph : 4086-3000, Fax 2685-5252 In Joint Venture With Soosung Engineering Co. Ltd., South Korea	In Association With Full Bright Consultancy (Pvt.) Ltd. 316,Baburam Acharya Sadak, Sinamangal, Kathmandu, GPO Box: 4970, Kathmandu, Nepal	Prepared By	K.M.JOHRI	DRAWING TITLE: REINFORCEMENT DETAILS OF END CROSS GIRDER & INTERMEDIATE CROSS GIRDER EFFECTIVE SPAN : 25.00m (PACKAGE-II)
				Designed By	RAGHURAJ T.	
				Checked By	P.K.KHAN	Drawing No.:
				Approved By	B.N.SINGH	NIRTTP/NAG-MUG/12+355/RCC_G/25.00m/ 03/R0

Scale: As Shown

Date: JUNE-2018

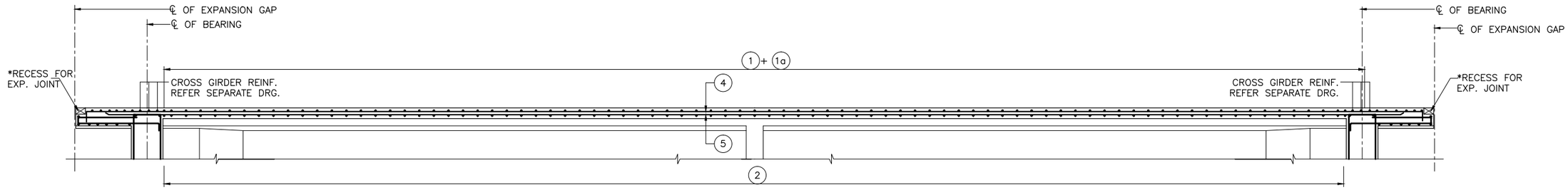

SECTION 1 - 1

(SCALE 1:60)

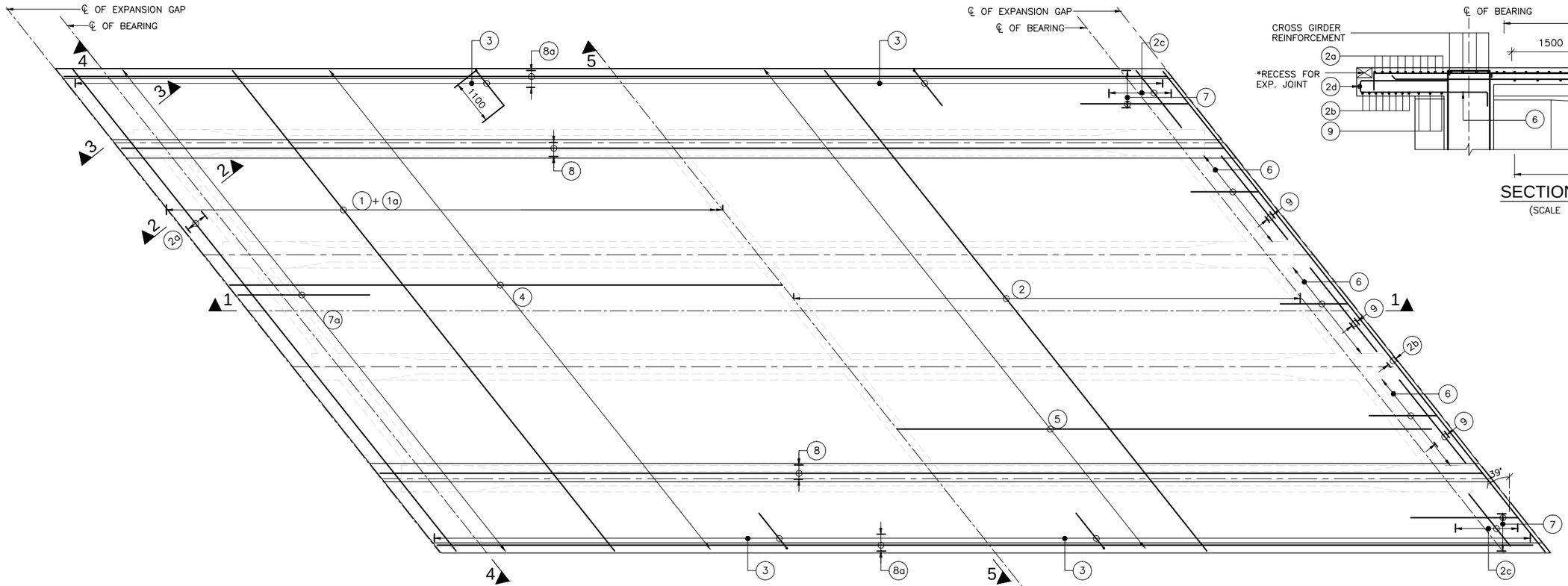

PLAN

(SCALE 1:75)

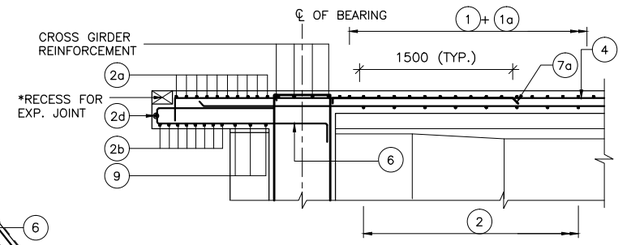

SECTION 2 - 2

(SCALE 1:40)

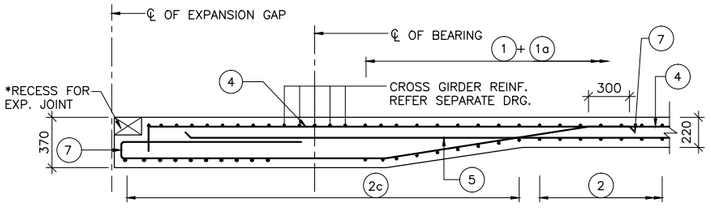

SECTION 3 - 3

(SCALE 1:30)

EMPLOYER	PROJECT	DESIGN CONSULTANT					
Government of Nepal Ministry of Physical Infrastructure and Transport, Department of Roads, Foreign Co-operation Branch	Nepal India Regional Trade and Transport Project (NIRTTP) (IDA CREDIT No. 5273 - NEP) Detailed Design of Kathmandu (Nagdhunga) - Naubise - Mugling Road and Bridges	Intercontinental Consultants & Technocrats Pvt.Ltd, A-8, Green Park, New Delhi - 110016 Ph : 4086-3000, Fax 2685-5252 In Joint Venture With Soosung Engineering Co. Ltd., South Korea	In Association With Full Bright Consultancy (Pvt.) Ltd. 316,Baburam Acharya Sadak, Sinamangal, Kathmandu, GPO Box: 4970, Kathmandu, Nepal	Prepared By		K.M.JOHRI	DRAWING TITLE: REINFORCEMENT DETAILS OF DECK SLAB EFFECTIVE SPAN : 25.00m (PACKAGE-II)	Scale:
				Designed By		RAGHURAJ T.		As Shown
				Checked By		P.K.KHAN	Drawing No.:	
				Approved By		B.N.SINGH	NIRTTP/NAG-MUG/12+355/RCC_G/25.00m/ 04/R0	

Date: JUNE-2018

(SHEET 1 OF 2)

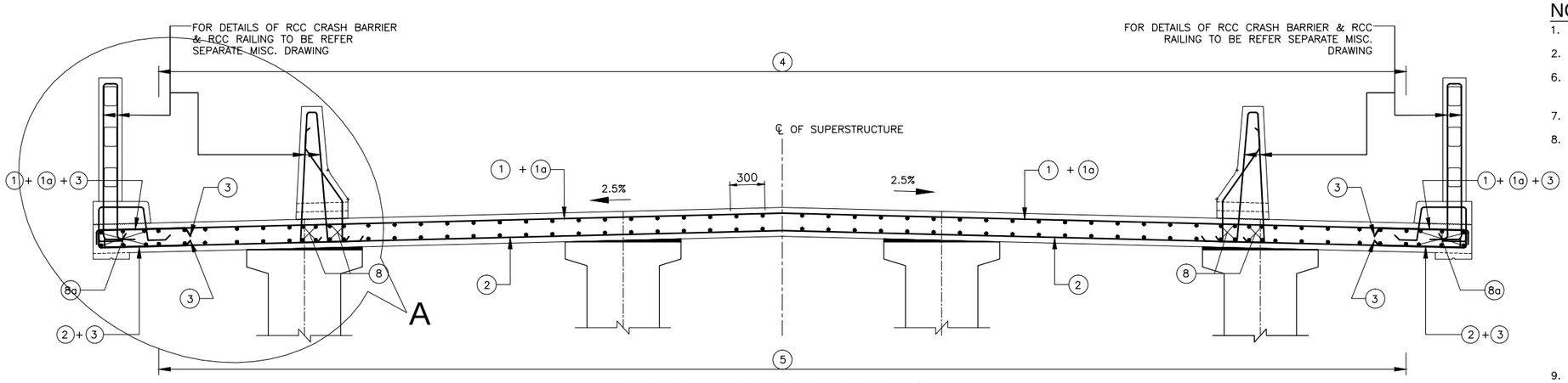

SECTION AT 5 - 5 (MID SPAN)

(SCALE 1:30)

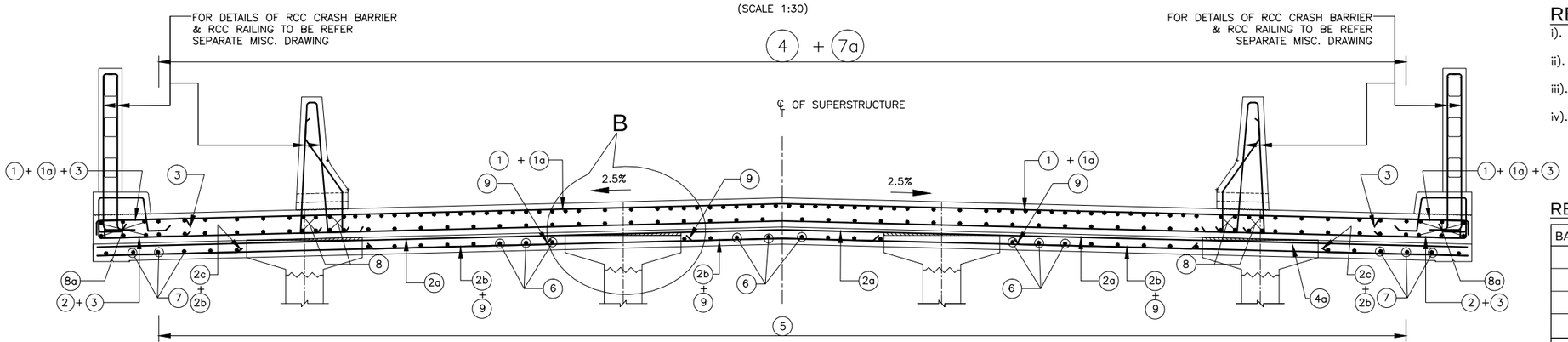

SECTION AT 4 - 4 (NEAR SUPPORT)

(SCALE 1:30)

FOR RCC CRASH BARRIER REINF. REFER MISCELLANEOUS DRG.

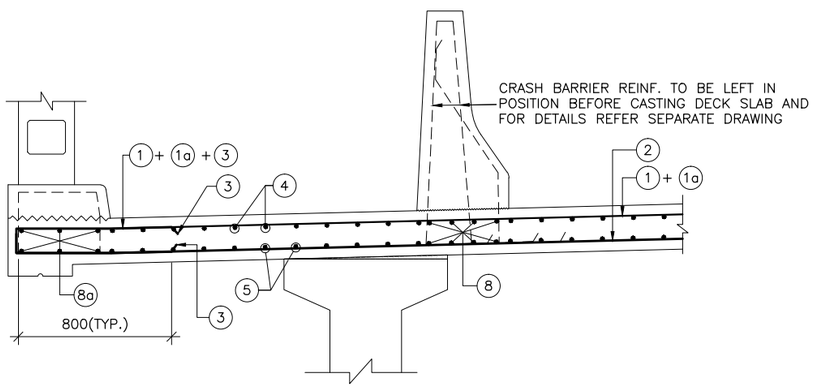

DETAIL-A

(SCALE 1:20)

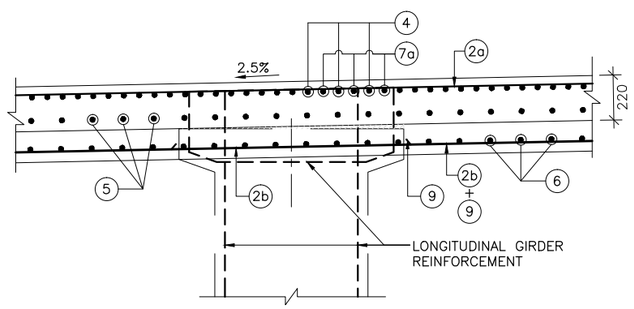

DETAIL-B

(SCALE 1:20)

NOTES:-

1. ALL DIMENSIONS ARE IN MILLIMETERS AND LEVELS ARE IN METERS UNLESS OTHERWISE SPECIFIED.
2. DIMENSIONS ARE NOT TO BE SCALED. ONLY WRITTEN DIMENSIONS SHALL BE FOLLOWED.
6. UNTENSIONED REINFORCEMENT SHALL BE THERMO MECHANICALLY TREATED (TMT), HYSD BARS OF GRADE DESIGNATION Fe–500D CONFORMING TO IS: 1786.
7. CLEAR COVER TO THE OUTERMOST STEEL SHALL BE 40mm UNLESS OTHERWISE SPECIFIED.
8. LAPPING OF REINFORCEMENT SHALL BE AVOIDED AS FAR AS POSSIBLE. IN CASE LAPPING OF BARS BECOMES UNAVOIDABLE, MINIMUM LAP LENGTH OF REINFORCEMENT BARS SHALL BE CALCULATED AS FOLLOW WITH MAXIMUM ALLOWABLE LAPPING (p) OF 50% ONLY. (IRC:112–2011) (CLAUSE:15.2.5.1)
   LAP LENGTH ls = $\alpha 1$.lbnet
   $\alpha 1$ = 1.0 FOR p%≤25%
   $\alpha 1$ = 1.15 FOR 25%≤p%≤33%
   $\alpha 1$ = 1.4 FOR 33%≤p%≤50%
   (IRC:112–2011) (CLAUSE:15.2.3.3)
   DEVELOPMENT LENGTH (lbnet)
   lbnet = α.lb (α = 1.0)
   lb = kϕ
   k = 40 FOR M30 (Fe500D)
   k = 36 FOR M35 (Fe500D)
   k = 34 FOR M40 (Fe500D)
   FOR UNFAVORABLE BOND CONDITION THE lb SHOULD BE MULTIPLIED BY FACTOR OF 1.43. FOR ϕ>32mm lb, SHOULD BE INCREASED BY MULTIPLYING FACTOR $(\frac{132-\phi}{100})$
9. RECESS FOR EXPANSION JOINT, AS PER SUPPLIER DETAILS.

REFERENCE DRAWINGS:-

i). DIMENSIONAL DETAILS OF LONGITUDINAL GIRDER
NIRTTP/NAG–MUG/ 12+355/RCC_G/25.00m/01/R0 (SHEET1&2)
ii). REINFORCEMENT DETAILS OF CROSS GIRDER
NIRTTP/NAG–MUG/ 12+355/RCC_G/25.00m/03/R0
iii). REINFORCEMENT DETAILS OF RCC DECK SLAB
NIRTTP/NAG–MUG/ 12+355/RCC_G/25.00m/04/R0
iv). BEARING FORCE AND LAYOUT
NIRTTP/NAG–MUG/ 12+355/RCC_G/25.00m/05/R0

REINFORCEMENT SCHEDULE

BAR MKD.	DESCRIPTION	SHAPE	REMARKS
1	12ϕ @200 C/C		
1a	16ϕ @200 C/C		
2	12ϕ @100 C/C		
2a	12ϕ @100 C/C		
2b	12ϕ @100 C/C		
2c	12ϕ @100 C/C		
2d	12ϕ –1 Nos.		
3	12ϕ @100 C/C		
4	10ϕ @200 C/C		
5	10ϕ @200 C/C		
6	12ϕ @200 C/C		
7	12ϕ @200 C/C		
7a	12ϕ @200 C/C		
8	16ϕ –8 Nos.		(ON EACH SIDE)
8a	16ϕ –6 Nos.		(ON EACH SIDE)
9	12ϕ –3 Nos.		

EMPLOYER	PROJECT	DESIGN CONSULTANT					
Government of Nepal Ministry of Physical Infrastructure and Transport, Department of Roads, Foreign Co-operation Branch	Nepal India Regional Trade and Transport Project (NIRTTP) (IDA CREDIT No. 5273 - NEP) Detailed Design of Kathmandu (Nagdhunga) - Naubise - Mugling Road and Bridges	Intercontinental Consultants & Technocrats Pvt.Ltd, A-8, Green Park, New Delhi - 110016 Ph : 4086-3000, Fax 2685-5252 In Joint Venture With Soosung Engineering Co. Ltd., South Korea	In Association With Full Bright Consultancy (Pvt.) Ltd. 316,Baburam Acharya Sadak, Sinamangal, Kathmandu, GPO Box: 4970, Kathmandu, Nepal	Prepared By		K.M.JOHRI	DRAWING TITLE: REINFORCEMENT DETAILS OF DECK SLAB EFFECTIVE SPAN : 25.00m (PACKAGE-II)
				Designed By		RAGHURAJ T.	
				Checked By		P.K.KHAN	Drawing No.: NIRTTP/NAG-MUG/12+355/RCC_G/25.00m/ 04/R0
				Approved By		B.N.SINGH	

Scale: As Shown

Date: JUNE-2018

(SHEET 2 OF 2)

PHEDI KHOLA BRIDGE

CHAINAGE : 14+407

LEGEND:-

B1		FREE SLIDING POT–CUM–PTFE BEARING
B2		PIN BEARING
B3		METALLIC GUIDED BEARING

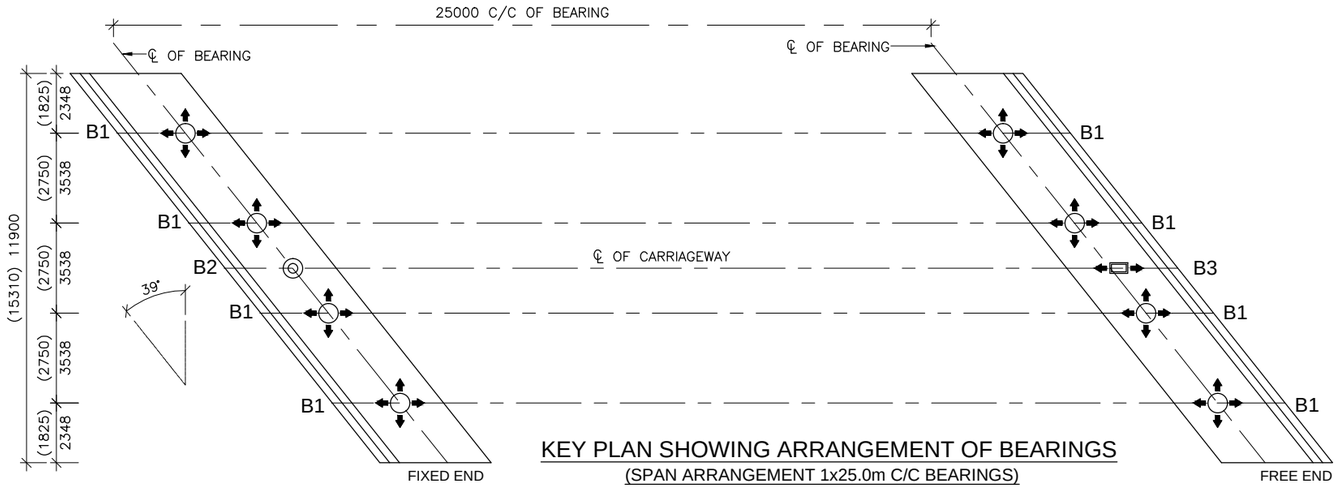

KEY PLAN SHOWING ARRANGEMENT OF BEARINGS
(SPAN ARRANGEMENT 1x25.0m C/C BEARINGS)

NOTES:–

1. MATERIAL SPECIFICATIONS, DESIGN OF BEARINGS, ACCEPTANCE CRITERIA AND INSTALLATION MORTH SHALL BE IN ACCORDANCE WITH IRC:83 (PART III)–2002 AND MOSRTH SPECIFICATIONS (FOURTH REVISION).
2. BEARINGS SHALL BE OBTAINED FROM MANUFACTURERS APPROVED BY MORTH.
3. INSTALLATION OF BEARINGS SHALL BE UNDER THE SUPERVISION OF REPRESENTATIVE OF THE MANUFACTURER.
4. FOR DESIGN LOADS AND ROTATIONS REFER TABLE IN THE DRAWING.
5. FOR BEARINGS, DETAILED SHOP DRAWINGS SHALL BE PREPARED BY THE SUPPLIER AND BE DULY APPROVED BEFORE MANUFACTURE AND INSTALLATION.
6. THE GROUT/BEDDING MORTAR SHALL BE HIGH STRENGTH FREE FLOWING NON SHRINK GROUT (80 MPa STRENGTH).
7. ALL BEARING SHALL BE PLACED IN TRULY HORIZONTAL PLANE ONLY.
8. FOR DESIGN OF POT BEARINGS, THE DESIGN HORIZONTAL FORCE SHALL, IN NO CASE BE LESS THAN 10% AND GREATER THAN 25% OF THE DESIGN VERTICAL LOAD.
9. THE CONTRACTOR AND SUPPLIER OF BEARINGS SHALL BE FURNISH A MINIMUM TROUBLE FREE WARRANTY OF 10 YEARS AFTER OPENING OF THE BRIDGE.
10. THIS DRAWING SHALL BE READ IN CONJUNCTION WITH:
    DIMENSIONAL DETAILS OF PRECAST RCC GIRDER & CAST–IN–SITU SLAB SUPERSTRUCTURE
    NIRTTP/NAG–MUG/12+355/RCC_G/25.00m/01/R0

GENERAL DATA:

1. STRUCTURE IS LOCATED IN SEISMIC ZONE : V
2. GRADE OF CONCRETE
   ABUTMENT CAP. M–30
   PEDESTAL M–40

TABLE SHOWING DATA FOR DESIGN OF BEARINGS

SL. No.	BEARING TYPE	LOAD CONDITION	LOADS, FORCES, MOVEMENTS AND ROTATION DATA										BEARING (Nos.) PER SPAN
			VERTICAL LOAD (kN)		HORIZONTAL FORCE (kN)				ROTATION (RAD)		MOVEMENT (mm)		
			CASE	MAGNITUDE	LONGITUDINAL		TRANSVERSE		CASE	MAGNITUDE	LONGITUDINAL	TRANSVERSE	
(1)	(2)	(3)	(4)	(5)	(6)	(7)	(8)	(9)	(10)	(11)	(12)	(13)	(14)
1.	FREE POT –CUM PTFE	NORMAL	MAXIMUM (WITH LIVE LOAD)	2140	COEXISTING	214	COEXISTING	–	COEXISTING	0.002	–14.6/14.3	6.00	8
			MINIMUM (WITH LIVE LOAD)	715	COEXISTING	72	COEXISTING	–	COEXISTING	0.002	–14.6/14.3	6.00	
			MINIMUM (WITHOUT LIVE LOAD)	486	COEXISTING	49	COEXISTING	–	COEXISTING	0.002	–14.6/14.3	6.00	
		SEISMIC (LONGITUDINAL)	MAXIMUM (WITH LIVE LOAD)	1056	COEXISTING	–	COEXISTING	–	COEXISTING	0.002	–14.6/14.3	6.00	
			MINIMUM (WITH LIVE LOAD)	591	COEXISTING	–	COEXISTING	–	COEXISTING	0.002	–14.6/14.3	6.00	
			MINIMUM (WITHOUT LIVE LOAD)	539	COEXISTING	–	COEXISTING	–	COEXISTING	0.002	–14.6/14.3	6.00	
		SEISMIC (TRANSVERSE)	MAXIMUM (WITH LIVE LOAD)	1056	COEXISTING	–	COEXISTING	–	COEXISTING	0.002	–14.6/14.3	6.00	
			MINIMUM (WITH LIVE LOAD)	591	COEXISTING	–	COEXISTING	–	COEXISTING	0.002	–14.6/14.3	6.00	
			MINIMUM (WITHOUT LIVE LOAD)	539	COEXISTING	–	COEXISTING	–	COEXISTING	0.002	–14.6/14.3	6.00	
2.	PIN BEARING	NORMAL	MAXIMUM (WITH LIVE LOAD)	–	COEXISTING	334	COEXISTING	–	COEXISTING	0.002	–	–	1
			MINIMUM (WITH LIVE LOAD)	–	COEXISTING	223	COEXISTING	–	COEXISTING	0.002	–	–	
			MINIMUM (WITHOUT LIVE LOAD)	–	COEXISTING	224	COEXISTING	–	COEXISTING	0.002	–	–	
		SEISMIC (LONGITUDINAL)	MAXIMUM (WITH LIVE LOAD)	–	COEXISTING	2923	COEXISTING	483	COEXISTING	0.002	–	–	
			MINIMUM (WITH LIVE LOAD)	–	COEXISTING	2923	COEXISTING	433	COEXISTING	0.002	–	–	
			MINIMUM (WITHOUT LIVE LOAD)	–	COEXISTING	2887	COEXISTING	433	COEXISTING	0.002	–	–	
		SEISMIC (TRANSVERSE)	MAXIMUM (WITH LIVE LOAD)	–	COEXISTING	902	COEXISTING	1608	COEXISTING	0.002	–	–	
			MINIMUM (WITH LIVE LOAD)	–	COEXISTING	902	COEXISTING	1442	COEXISTING	0.002	–	–	
			MINIMUM (WITHOUT LIVE LOAD)	–	COEXISTING	902	COEXISTING	961	COEXISTING	0.002	–	–	
3.	METALLIC GUIDE BEARING	NORMAL	MAXIMUM (WITH LIVE LOAD)	–	COEXISTING	–	COEXISTING	–	COEXISTING	0.002	–14.6/14.3	–	1
			MINIMUM (WITH LIVE LOAD)	–	COEXISTING	–	COEXISTING	–	COEXISTING	0.002	–14.6/14.3	–	
			MINIMUM (WITHOUT LIVE LOAD)	–	COEXISTING	–	COEXISTING	–	COEXISTING	0.002	–14.6/14.3	–	
		SEISMIC (LONGITUDINAL)	MAXIMUM (WITH LIVE LOAD)	–	COEXISTING	–	COEXISTING	483	COEXISTING	0.002	–14.6/14.3	–	
			MINIMUM (WITH LIVE LOAD)	–	COEXISTING	–	COEXISTING	433	COEXISTING	0.002	–14.6/14.3	–	
			MINIMUM (WITHOUT LIVE LOAD)	–	COEXISTING	–	COEXISTING	433	COEXISTING	0.002	–14.6/14.3	–	
		SEISMIC (TRANSVERSE)	MAXIMUM (WITH LIVE LOAD)	–	COEXISTING	–	COEXISTING	1608	COEXISTING	0.002	–14.6/14.3	–	
			MINIMUM (WITH LIVE LOAD)	–	COEXISTING	–	COEXISTING	1442	COEXISTING	0.002	–14.6/14.3	–	
			MINIMUM (WITHOUT LIVE LOAD)	–	COEXISTING	–	COEXISTING	961	COEXISTING	0.002	–14.6/14.3	–	

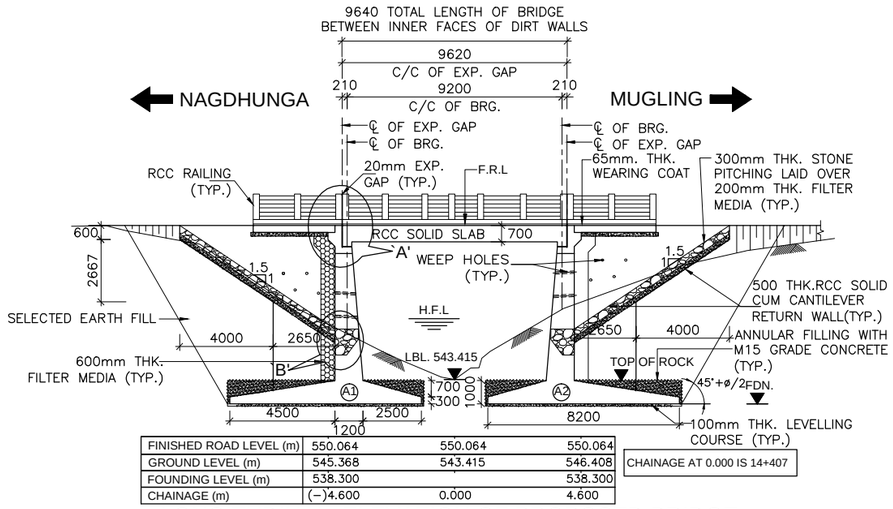

FINISHED ROAD LEVEL (m)	550.064	550.064	550.064
GROUND LEVEL (m)	545.368	543.415	546.408
FOUNDING LEVEL (m)	538.300		538.300
CHAINAGE (m)	(−)4.600	0.000	4.600

CHAINAGE AT 0.000 IS 14+407

LONGITUDINAL ELEVATION OF PROPOSED BRIDGE

(SCALE 1:150)

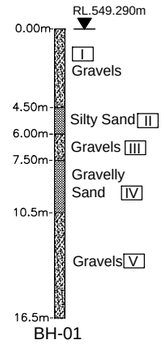

BH-01

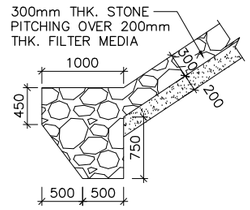

DETAIL-B

SCALE−1:50

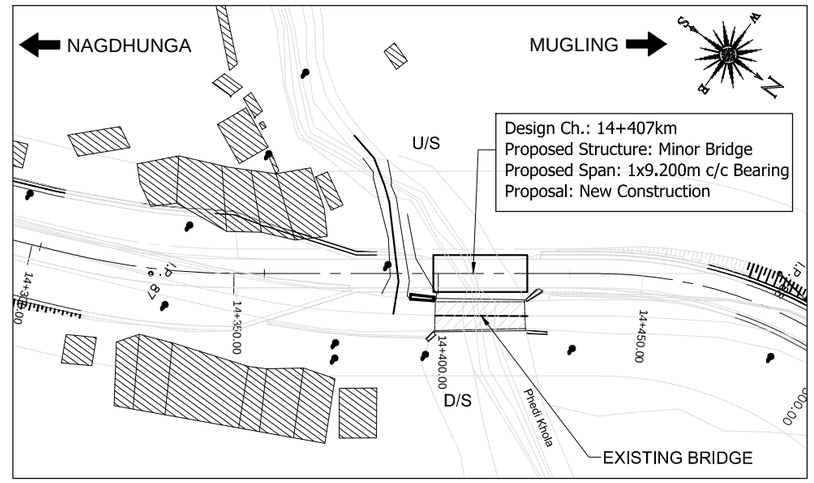

KEY PLAN

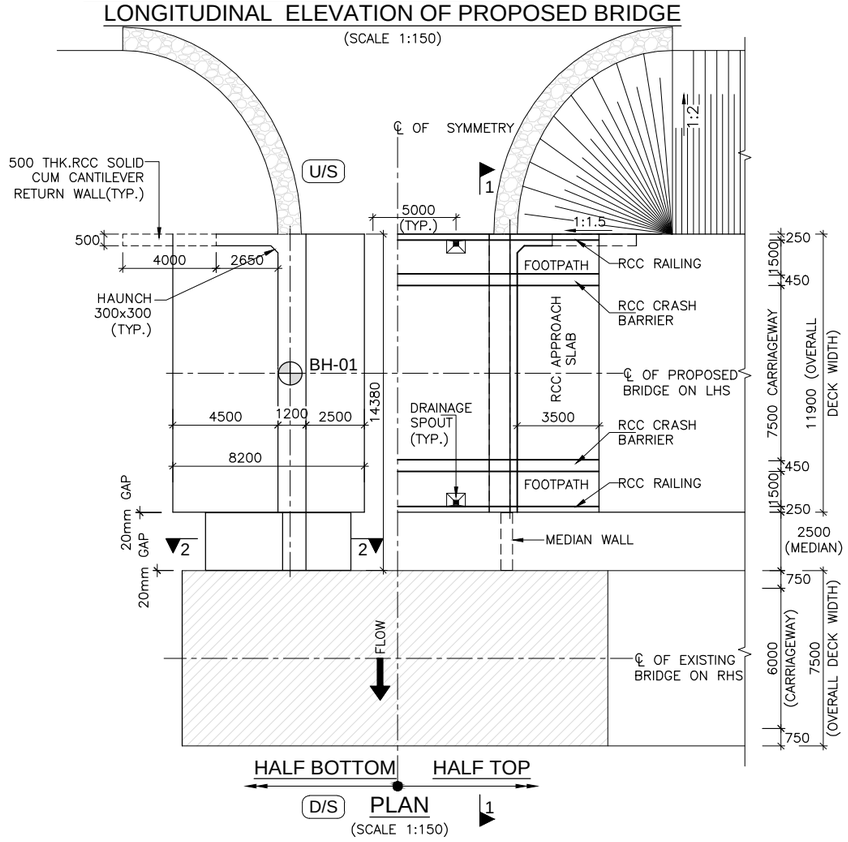

PLAN

(SCALE 1:150)

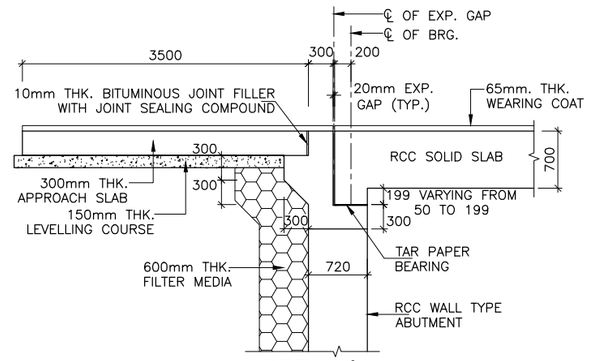

DETAIL-`A'

(SCALE 1:50)

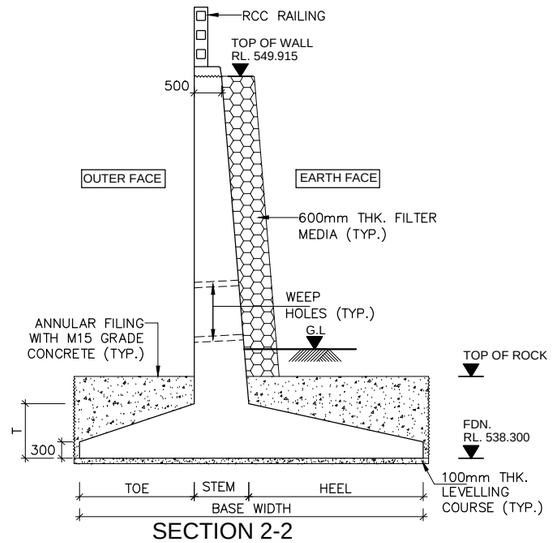

SECTION 2-2

(REFER SEPARATE DRAWING FOR DETAILS)

(SCALE 1:75)

HYDROLOGICAL DATA:

H.F.L	=	546.110m
DESIGN DISCHARGE	=	50 Cumecs
VELOCITY	=	5.87m/s
ROCK LVL	=	538.790m

LEGEND:

F.R.L	:	FINISHED ROAD LEVEL
H.F.L	:	HIGH FLOOD LEVEL
℄	:	CENTER LINE
LVL.	:	LEVEL
RL.	:	REDUCED LEVEL
TYP.	:	TYPICAL
THK.	:	THICK
D/S	:	DOWNSTREAM
U/S	:	UPSTREAM
G.L	:	GROUND LEVEL
L.B.L	:	LOWEST BED LEVEL
FDN.	:	FOUNDING LEVEL
FX	:	FIX
FR	:	FREE
EXISTING	:	
PROPOSED	:	
BH	:	BORE HOLE

EMPLOYER	PROJECT	DESIGN CONSULTANT
Government of Nepal Ministry of Physical Infrastructure and Transport, Department of Roads, Foreign Co-operation Branch	Nepal India Regional Trade and Transport Project (NIRTTP) (IDA CREDIT No. 5273 - NEP) Detailed Design of Kathmandu (Nagdhunga) - Naubise - Mugling Road and Bridges	Intercontinental Consultants & Technocrats Pvt.Ltd, A-8, Green Park, New Delhi - 110016 Ph : 4086-3000, Fax 2685-5252 In Joint Venture With Soosung Engineering Co. Ltd., South Korea In Association With Full Bright Consultancy (Pvt.) Ltd. 316,Baburam Acharya Sadak, Sinamangal, Kathmandu, GPO Box: 4970, Kathmandu, Nepal

Prepared By		K.M.JOHRI
Designed By		NISHTHA S.
Checked By		P.K.KHAN
Approved By		B.N.SINGH

DRAWING TITLE:
GENERAL ARRANGEMENT DRAWING FOR MINOR BRIDGE AT CH:- 14+407KM OVER PHEDI KHOLA (1x9.200m)
PACKAGE-II (NAUBISE-GALCHI)

Drawing No.:
NIRTTP/NAG-MUG/PHEDI/GAD

Scale: As Shown

Date: JUNE-2018

SHEET 1 OF 2

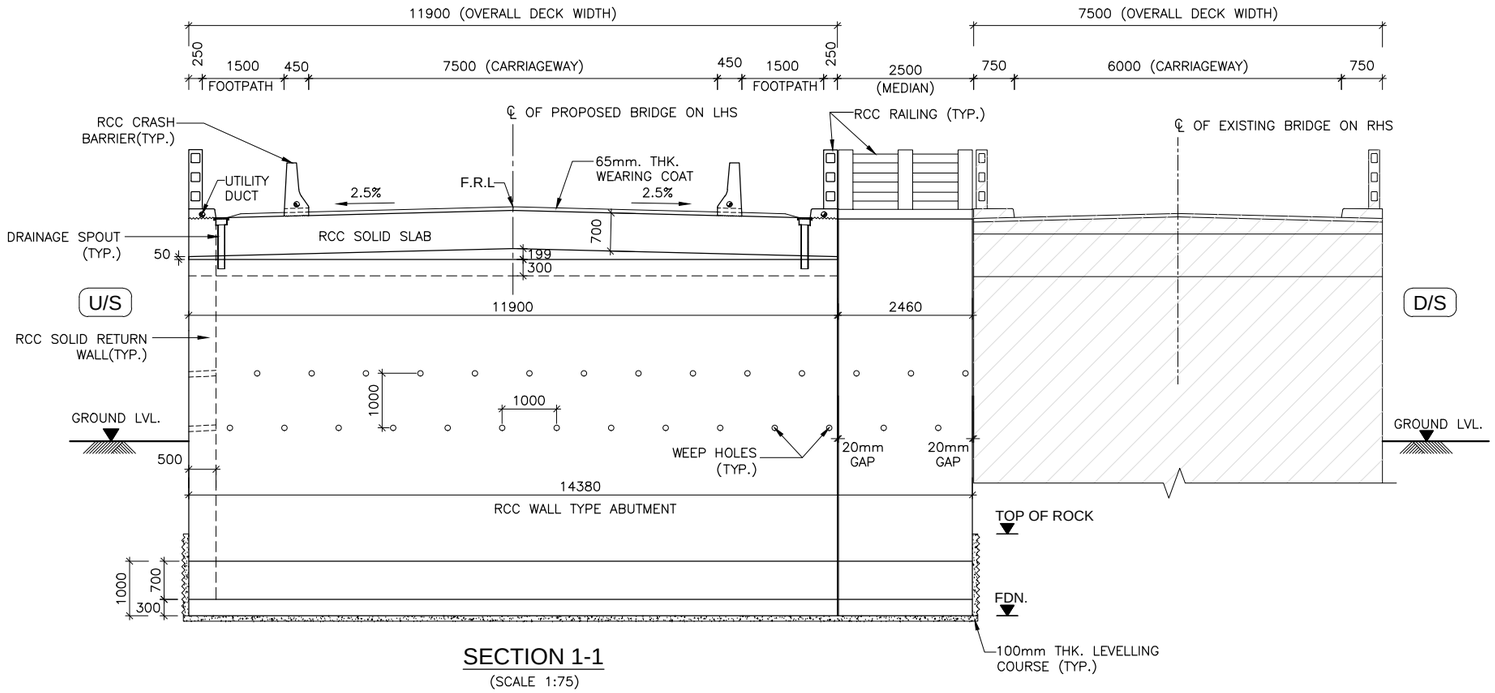

SECTION 1-1

(SCALE 1:75)

FACE OF OLD ABUTMENT SHALL BE MATCHED WITH PROPOSED BRIDGE ABUTMENT. IN CASE OF BIGGER SPAN IN PROPOSED SPAN, MEDIAN WALL SHALL BE PROVIDED IN FLARED SHAPE TO ALLOW SMOOTH PASSAGE OF RIVER WATER.

ABUTMENT CAP SHALL BE CAST ONLY AFTER COMPLETING THE BACK FILLING WORK UP TO ABUTMENT SHAFT TOP LEVEL.

NOTES:-

1. ALL DIMENSIONS ARE IN MILLIMETERS AND LEVELS ARE IN METERS UNLESS OTHERWISE SPECIFIED.
2. DIMENSIONS ARE NOT TO BE SCALED ONLY WRITTEN DIMENSIONS SHALL BE FOLLOWED.
3. THE BRIDGE HAS BEEN DESIGNED FOR TWO LANE TRAFFIC FOR LIVE LOAD COMBINATIONS OF CLASS A AND 70R WITH FOOTPATH LIVE LOAD.
   OR IRC SV VEHICLE WITH FOOTPATH LIVE LOAD.
   OR THREE LANE TRAFFIC FOR LIVE LOAD COMBINATIONS OF CLASS A AND 70R WITHOUT FOOTPATH LIVE LOAD AS PER IRC:6–2017, WHICHEVER GOVERNS.
4. MODERATE CONDITION OF EXPOSURE HAS BEEN CONSIDERED IN DESIGN.
5. CONCRETE SHALL BE DESIGN MIX WITH A MINIMUM 28 DAYS CHARACTERISTIC STRENGTH ON 150mm CUBE AS FOLLOWS:
   a. LEVELLING COURSE (UNDER FOUNDATION) – M10
   b. LEVELLING COURSE (UNDER APPROACH SLAB) – M15
   c. FOUNDATION – M30
   d. SUBSTRUCTURE – M30
   e. SUPERSTRUCTURE – M30
   f. RETURN/RETAINING WALL – M30
   g. CRASH BARRIER – M40
   h. APPROACH SLAB – M30
6. UNTENSIONED REINFORCEMENT SHALL BE THERMO MECHANICALLY TREATED, (TMT) STANDARDS HYSD BARS OF GRADE DESIGNATION Fe–500D CONFORMING TO IS: 1786.
7. TAR PAPER BEARINGS SHALL BE PROVIDED AS PER PROVISION OF IRC : 83 (PART–II 2015).
8. FILLER TYPE EXPANSION JOINTS SHALL BE PROVIDED AS PER PROVISION OF IRC: SP–69–2011.
9. 65MM THICK WEARING COURSE COMPRISING OF 40MM THICK ASPHALTIC CONCRETE OVERLAID WITH 25MM THICK MASTIC ASPHALT SHALL BE PROVIDED AS PER SECTION 500 OF MORT&H SPECIFICATION.
10. 100MM DIA WEEP HOLES AT 1000MM C/C STAGGERED HORIZONTALLY AND VERTICALLY SHALL BE PROVIDED IN ONE OR TWO LAYERS ABOVE L.W.L IN VERTICAL WALLS OF ABUTMENT, RETURN/RETAINING WALLS AT A SLOPE OF 1 VERTICAL TO 20 HORIZONTAL TOWARDS THE DRAINING FACE.
11. WATER TO BE USED IN CONCRETING AND CURING SHALL CONFORM TO CLAUSE 18.4.5 OF IRC:112–2011.
12. LAYING, COMPACTION AND EXTENT OF BACKFILL BEHIND ABUTMENTS AND RETURN/RETAINING WALLS SHALL CONSIST OF SELECTED EARTH CONFORMING TO APPENDIX:6 OF IRC:78–2014 HAVING PROPERTIES C=0, ϕ= 35°, δ=22.5° & γd = 20 KN/M^3.
13. MINIMUM CLEAR COVER TO OUTER MOST REINFORCEMENT SHALL BE AS UNDER:–
    a. SUPERSTRUCTURE – 40MM
    b. SUBSTRUCTURE (EARTH FACE) – 75MM
    c. SUBSTRUCTURE (NON EARTH FACE) – 50MM
    d. FOUNDATION – 75MM
14. WHERE FOUNDATIONS ARE PLACED ON ROCK, TRENCHES AROUND THE FOOTING SHALL BE FILLED UP WITH CONCRETE OF M15 GRADE UPTO TOP OF ROCK
15. SAFE BEARING CAPACITY CONSIDERED IN DESIGN AT PROPOSED FOUNDING LEVEL IS 43 T/M^2. THIS SHALL BE ASCERTAINED BEFORE EXECUTION AT SITE BY CONFIRMATORY GEOTECHNICAL INVESTIGATIONS.
16. FILTER MEDIA SHALL BE PROVIDED AS PER APPENDIX–6 OF IRC–78:2014.
17. MINIMUM ANCHORAGE OF FOUNDATION IN SOFT ROCK SHALL BE 1.5M AND 0.6M IN HARD ROCK. ANY DEVIATION IN ROCK LEVEL FROM DESIGN SHALL BE REPORTED TO ENGINEER FOR REQUIRED CHANGES IN DESIGN NO CHANGES REQUIRED FOR INCREASE HEIGHT UP TO 50 CM.
18. THIS DRAWING SHOULD BE READ IN CONJUNCTION WITH RELEVANT HIGHWAY PLAN AND PROFILE DRAWINGS.
19. ALL CHAINAGES, FRL, GL SHALL BE CONFIRMED AT SITE PRIOR TO EXECUTION.
20. FOR APPROACH SLAB, DRAINAGE SPOUTS, CRASH BARRIER, PROTECTION WORK, RETAINING WALL AND MEDIAN WALL DETAILS REFER SEPARATE DRAWINGS.

LEGEND:

F.R.L	:	FINISHED ROAD LEVEL
H.F.L	:	HIGH FLOOD LEVEL
℄	:	CENTER LINE
LVL.	:	LEVEL
RL.	:	REDUCED LEVEL
TYP.	:	TYPICAL
THK.	:	THICK
D/S	:	DOWNSTREAM
U/S	:	UPSTREAM
G.L	:	GROUND LEVEL
L.B.L	:	LOWEST BED LEVEL
FDN.	:	FOUNDING LEVEL
FX	:	FIX
FR	:	FREE
EXISTING	:	
PROPOSED	:	
BH	:	BORE HOLE

REFERENCE DRAWINGS:-

1. DIMENSIONAL DETAILS OF ABUTMENT AND FOUNDATION:
   –NIRTTP/NAG–MUG/PHEDI/SUB–01
2. REINF. DETAILS OF ABUT. SHAFT, CAP, FOOTING, DIRT WALL AND RETURN WALL.
   –NIRTTP/NAG–MUG/PHEDI/SUB–02 (SHEET 1 & 2)
3. DIMENSION DETAILS OF RCC SOLID SUPERSTRUCTURE:
   –NIRTTP/NAG–MUG/PHEDI/SUP–01
4. REINF. DETAILS OF RCC SOLID SUPERSTRUCTURE:
   –NIRTTP/NAG–MUG/PHEDI/SUP–02

MISCELLANEOUS DRAWINGS:

1. DETAILS OF APPROACH SLAB:
   –NIRTTP/NAG–MUG/PACKAGE–II/MISC.–01
2. DETAILS OF DRAINAGE SPOUT & WEARING COAT:
   –NIRTTP/NAG–MUG/PACKAGE–II/MISC.–02
3. DIMENSIONAL & REINF. DETAILS OF R.C.C CRASH BARRIER:
   –NIRTTP/NAG–MUG/PACKAGE–II/MISC.–03
4. DIMENSIONAL & REINF. DETAILS OF R.C.C RAILING:
   –NIRTTP/NAG–MUG/PACKAGE–II/MISC.–04
5. DETAILS OF FILLER TYPE EXPANSION JOINT:
   –NIRTTP/NAG–MUG/PACKAGE–II/MISC.–05
6. DIMENSIONAL AND REINFORCEMENT DETAILS OF RCC RETAINING WALL/MEDIAN WALL:
   –NIRTTP/NAG–MUG/PACKAGE–II/MISC.–06

EMPLOYER	PROJECT	DESIGN CONSULTANT					
Government of Nepal Ministry of Physical Infrastructure and Transport, Department of Roads, Foreign Co-operation Branch	Nepal India Regional Trade and Transport Project (NIRTTP) (IDA CREDIT No. 5273 - NEP) Detailed Design of Kathmandu (Nagdhunga) - Naubise - Mugling Road and Bridges	Intercontinental Consultants & Technocrats Pvt.Ltd, A-8, Green Park, New Delhi - 110016 Ph : 4086-3000, Fax 2685-5252 In Joint Venture With Soosung Engineering Co. Ltd., South Korea	In Association With Full Bright Consultancy (Pvt.) Ltd. 316,Baburam Acharya Sadak, Sinamangal, Kathmandu, GPO Box: 4970, Kathmandu, Nepal	Prepared By		K.M.JOHRI	DRAWING TITLE: GENERAL ARRANGEMENT DRAWING FOR MINOR BRIDGE AT CH:- 14+407KM OVER PHEDI KHOLA (1x9.200m) PACKAGE-II (NAUBISE-GALCHI)
				Designed By		NISHTHA S.	
				Checked By		P.K.KHAN	Drawing No.: NIRTTP/NAG-MUG/PHEDI/GAD
				Approved By		B.N.SINGH	

Scale: As Shown

Date: JUNE-2018

SHEET 2 OF 2

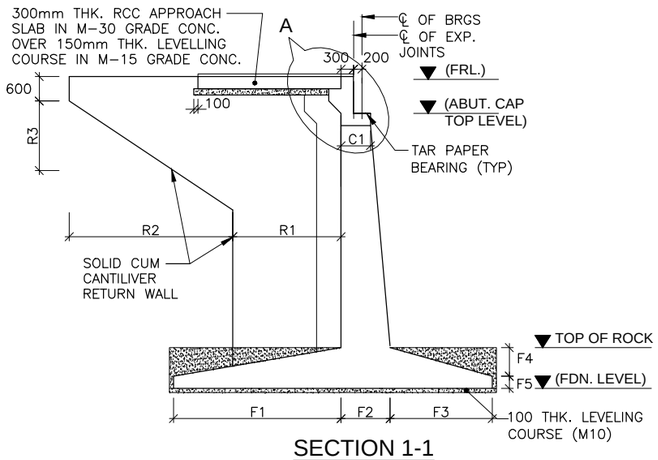

SECTION 1-1

(SCALE 1:100)

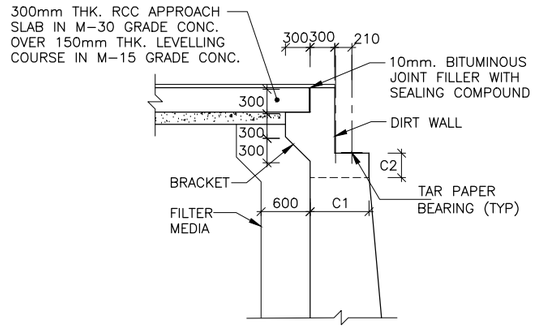

DETAIL-A

(SCALE 1:50)

DIMENSION SCHEDULE

MARKS		DESCRIPTION
CAP	C1	720
	C2	300
FOUNDATION	F1	4500
	F2	1200
	F3	2500
	F4	700
	F5	300
RETURN WALL	R1	2650
	R2	4000
	R3	2667
	R4	500

NOTES:

1. ALL DIMENSIONS ARE IN MILLIMETERS UNLESS OTHERWISE MENTIONED. ONLY WRITTEN DIMENSIONS ARE TO BE FOLLOWED. NO DIMENSIONS SHALL BE SCALED.
2. CONCRETE SHALL BE DESIGN MIX WITH A MINIMUM 28 DAYS CHARACTERISTIC STRENGTH ON 150mm CUBES AS FOLLOWS :-
   SUBSTRUCTURE -30 MPa
   FOUNDATION -30 MPa
   LEVELING COURSE (UNDER FOUNDATION) -10 MPa
3. THE REINFORCING BARS SHALL BE OF THERMO MECHANICALLY TREATED (TMT-CRS) (GRADE DESIGNATION Fe-500D) CONFORMING TO IS:1786 STANDARDS.
4. CLEAR COVER TO OUTER MOST STEEL SHALL BE AS UNDER:-
   a) FOR FOUNDATION -75MM
   b) FOR SUBSTRUCTURE (EARTH FACE) -75MM
   c) FOR SUBSTRUCTURE (NON EARTH FACE) -50MM
5. LAPPING OF REINFORCEMENT SHALL BE AVOIDED AS FAR AS POSSIBLE. IN CASE LAPPING OF BARS BECOMES UNAVOIDABLE, MINIMUM LAP LENGTH OF REINFORCEMENT BARS SHALL BE CALCULATED AS eFOLLOW WITH MAXIMUM ALLOWABLE LAPPING (p) OF 50% ONLY.
   (IRC:112-2011) (CLAUSE:15.2.5.1)
   LAP LENGTH ls = α1.lbnet
   α1 = 1.0 FOR p%≤25%
   α1 = 1.15 FOR 25%≤p%≤33%
   α1 = 1.4 FOR 33%≤p%≤50%
   IN THE CASE OF BUNDLED BARS
   LAP LENGTH = 1.3x ls(CLAUSE:15.2.7.3)
   (IRC:112-2011) (CLAUSE:15.2.3.3)
   DEVELOPMENT LENGTH (lbnet)
   lbnet = α.lb (α = 1.0)
   lb = kø
   k = 40 FOR M30 (Fe500D)
   k = 36 FOR M35 (Fe500D)
   k = 34 FOR M40 (Fe500D)
   FOR UNFAVORABLE BOND CONDITION THE lb SHOULD BE MULTIPLIED BY FACTOR OF 1.43.
   FOR ø>32MM lb, SHOULD BE INCREASED BY MULTIPLYING FACTOR $(\frac{100}{132-ø})$
6. SPIRAL BINDERS SHALL BE LAPPED ONE AND HALF TURN.
7. LL REPRESENTS LONGITUDINAL AXIS OF BRIDGE AND TT REPRESENTS TRANSVERSE AXIS OF ABUTMENT/FOUNDATION.
8. NET SAFE BEARING CAPACITY AT THE PROPOSED FOUNDING LEVEL HAS BEEN CONSIDERED AS 55 T/M² ON THE BASIS OF SUB SURFACE EXPLORATION RESULTS. THIS SHALL GOT CONFIRMED BEFORE EXECUTION.
9. THIS DRAWING SHALL BE READ IN CONJUNCTION WITH THE FOLLOWING DRGS.

REFERENCE DRAWINGS:

1. GENERAL ARRANGEMENT DRAWING:
   NIRTTP/NAG-MUG/PHEDI/GAD (SHEET 1 & 2)
2. REINF. DETAILS OF ABUT. SHAFT, CAP, FOOTING, DIRT WALL AND RETURN WALL FOR ABUTMENT
   NIRTTP/NAG-MUG/PHEDI/SUB-02 (SHEET 1 & 2)

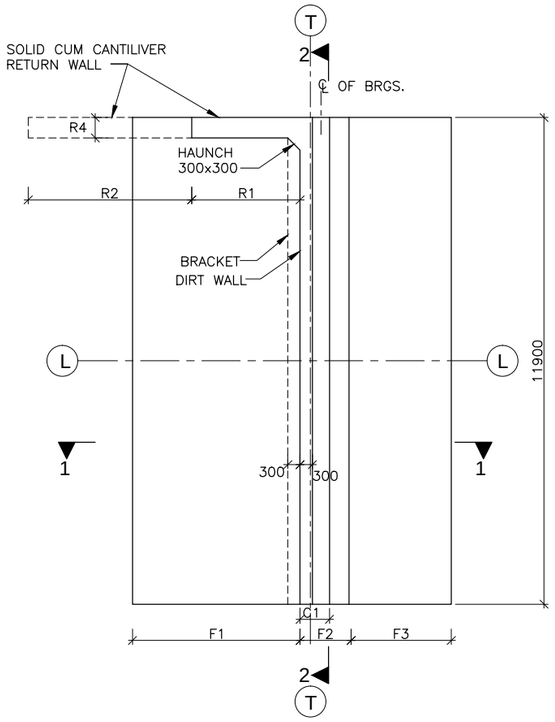

PLAN

(SHOWING ABUTMENT CAP AND FOUNDATION)

(SCALE 1:100)

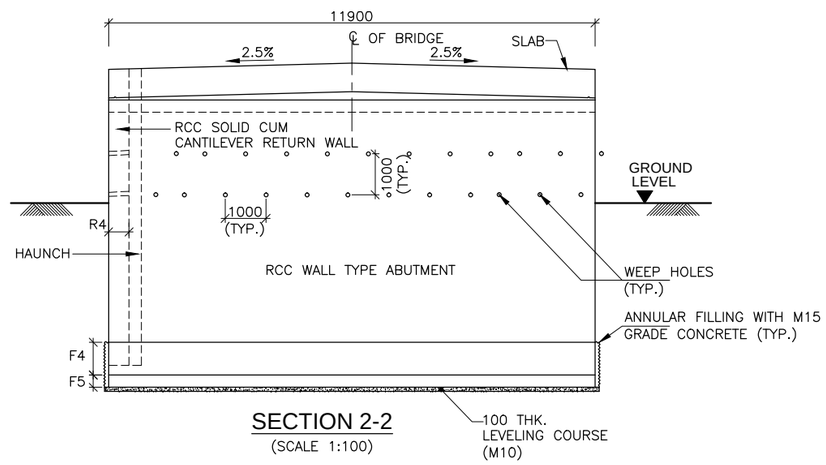

SECTION 2-2

(SCALE 1:100)

LEVEL SCHEDULE

	FRL (m)	ABUTMENT CAP TOP LVL. (m)	GR. LEVEL (m)	FDN. LEVEL (m)
ABUT MENT A1	550.064	549.099	545.368	538.300
ABUTMENT A2	550.064	549.099	546.408	538.300

EMPLOYER	PROJECT	DESIGN CONSULTANT					
Government of Nepal Ministry of Physical Infrastructure and Transport, Department of Roads, Foreign Co-operation Branch	Nepal India Regional Trade and Transport Project (NIRTTP) (IDA CREDIT No. 5273 - NEP) Detailed Design of Kathmandu (Nagdhunga) - Naubise - Mugling Road and Bridges	Intercontinental Consultants & Technocrats Pvt.Ltd, A-8, Green Park, New Delhi - 110016 Ph : 4086-3000, Fax 2685-5252 In Joint Venture With Soosung Engineering Co. Ltd., South Korea	In Association With Full Bright Consultancy (Pvt.) Ltd. 316,Baburam Acharya Sadak, Sinamangal, Kathmandu, GPO Box: 4970, Kathmandu, Nepal	Prepared By	K.M.JOHRI	DRAWING TITLE: DIMENSIONAL DETAILS OF ABUT. SHAFT,CAP, FOOTING, DIRT WALL AND RETURN WALL FOR ABUTMENT FOR MINOR BRIDGE AT CH:- 14+407KM OVER PHEDI KHOLA (1x9.200m) PACKAGE-II (NAUBISE-GALCHI)	Scale: As Shown	Date: JUNE-2018
				Designed By	NISHTHA S.			
				Checked By	P.K.KHAN	Drawing No.:		SHEET 1 OF 3
				Approved By	B.N.SINGH	NIRTTP/NAG-MUG/PHEDI/SUB-01		

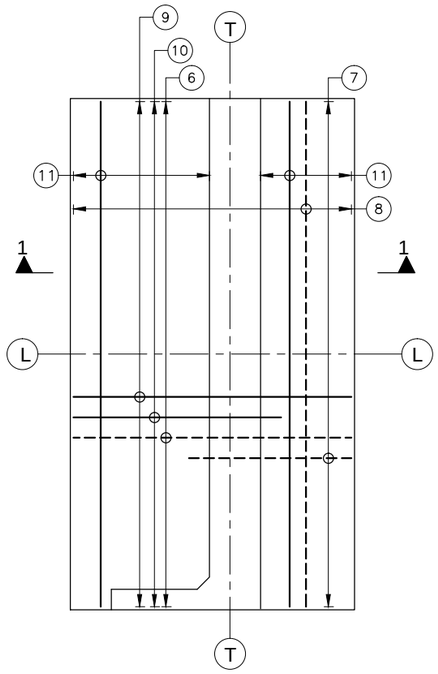

FOUNDATION PLAN
(BAR 12a NOT SHOWN FOR CLARITY)
(SCALE 1:100)

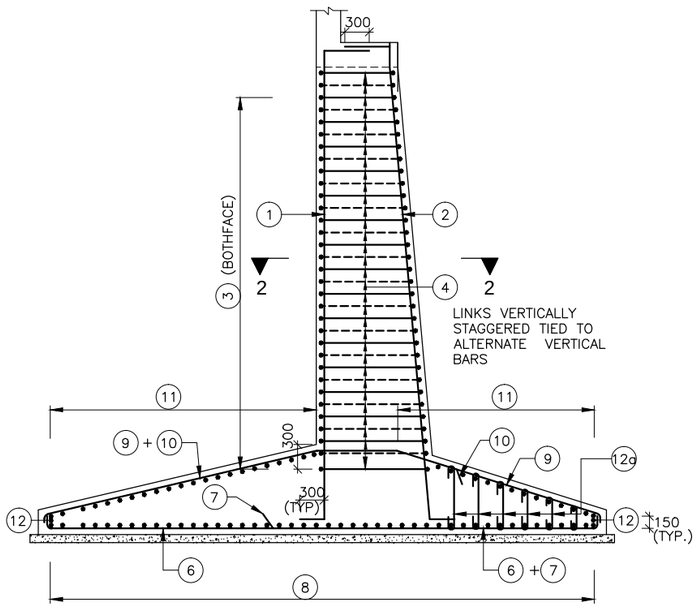

SECTION 1-1
(SCALE=1:50)

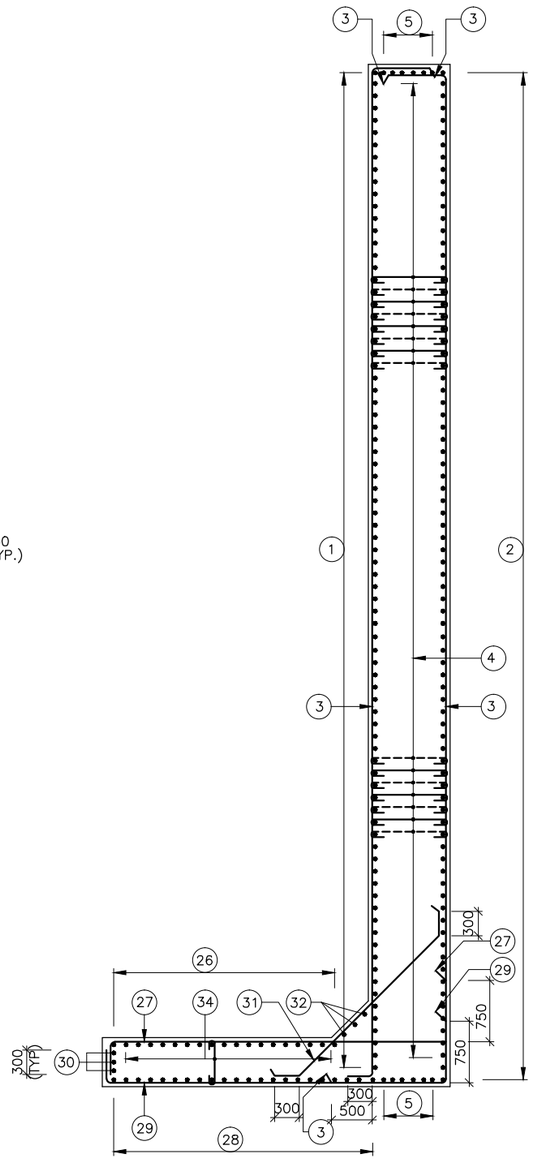

SECTION 2-2
(SCALE=1:50)

NOTES :-
1. ALL DIMENSIONS ARE IN MILLIMETERS UNLESS OTHERWISE MENTIONED.
2. ONLY WRITTEN DIMENSIONS ARE TO BE FOLLOWED AND NO DIMENSION SHALL BE SCALED.
3. CONCRETE SHALL BE DESIGN MIX WITH A MINIMUM 28 DAYS CHARACTERISTIC STRENGTH ON 150mm CUBE AS FOLLOWS:
   - SUBSTRUCTURE M–30
   - FOUNDATION M–30
   - LEVELLING COURSE M–10
4. THE REINFORCING BARS SHALL BE OF THERMO MECHANICALLY TREATED (TMT) HYSD BARS (GRADE DESIGNATION Fe–500D). CONFORMING TO IS:1786 STANDARDS.
5. MINIMUM ANCHORAGE LENGTH SHALL BE 40 TIMES DIA OF BAR.
6. CLEAR COVER TO OUTER MOST REINFORCEMENT SHALL BE AS UNDER:–
   a. FOR FOUNDATION–75MM.
   b. FOR ABUTMENT, DIRT WALL AND RETURN WALL:
      - EARTH FACE–75MM.
      - NON EARTH FACE–50MM.
7. LL REPRESENTS LONGITUDINAL AXIS OF BRIDGE AND TT REPRESENTS TRANSVERSE AXIS OF ABUTMENT/FOUNDATION.
8. NETSAFE BEARING CAPACITY AT THE PROPOSED FOUNDING LEVEL HAS BEEN CONSIDERED AS 55 T/M² ON THE BASIS OF SUB SURFACE EXPLORATION RESULTS. THIS SHALL GOT CONFIRMED BEFORE EXECUTION.
9. THIS DRAWING SHALL BE READ IN CONJUNCTION WITH THE FOLLOWING DRGS.

REFERENCE DRAWINGS:
1. GENERAL ARRANGEMENT DRAWING:
   NIRTTP/NAG–MUG/PHEDI/GAD (SHEET 1 & 2)
2. DIMENSIONAL DETAILS OF ABUTMENT AND FOUNDATION:
   –NIRTTP/NAG–MUG/PHEDI/SUB–01

LEGEND
TOP/EARTH FACE BARS ————————
BOTTOM/OTHER FACE BARS – – – – – –
LENGTH VARIES L. V.

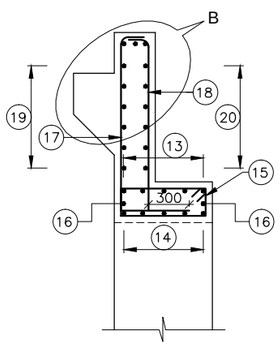

REINF. DETAILS OF DIRT WALL AND ABUTMENT CAP
(SCALE 1:30)

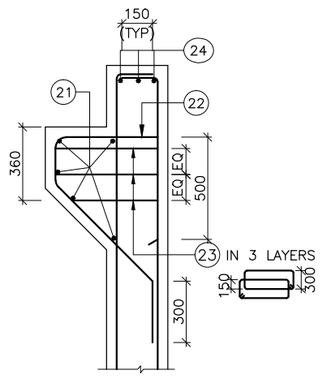

DETAIL-B
(DETAILS OF BRACKET)
(SCALE = 1:20)

EMPLOYER	PROJECT	DESIGN CONSULTANT					
Government of Nepal Ministry of Physical Infrastructure and Transport, Department of Roads, Foreign Co-operation Branch	Nepal India Regional Trade and Transport Project (NIRTTP) (IDA CREDIT No. 5273 - NEP) Detailed Design of Kathmandu (Nagdhunga) - Naubise - Mugling Road and Bridges	Intercontinental Consultants & Technocrats Pvt.Ltd, A-8, Green Park, New Delhi - 110016 Ph : 4086-3000, Fax 2685-5252 In Joint Venture With Soosung Engineering Co. Ltd., South Korea	In Association With Full Bright Consultancy (Pvt.) Ltd. 316,Baburam Acharya Sadak, Sinamangal, Kathmandu, GPO Box: 4970, Kathmandu, Nepal	Prepared By	K.M.JOHRI	DRAWING TITLE: REINFORCEMENT DETAILS OF ABUT.SHAFT,CAP, FOOTING, DIRT WALL AND RETURN WALL FOR ABUTMENT FOR MINOR BRIDGE AT CH:- 14+407KM OVER PHEDI KHOLA (1x9.200m) PACKAGE-II (NAUBISE-GALCHI)	Scale:	Date: JUNE-2018
				Designed By	NISHTHA S.		As Shown	
				Checked By	P.K.KHAN	Drawing No.:		SHEET 2 OF 3
				Approved By	B.N.SINGH	NIRTTP/NAG-MUG/PHEDI/SUB-02		

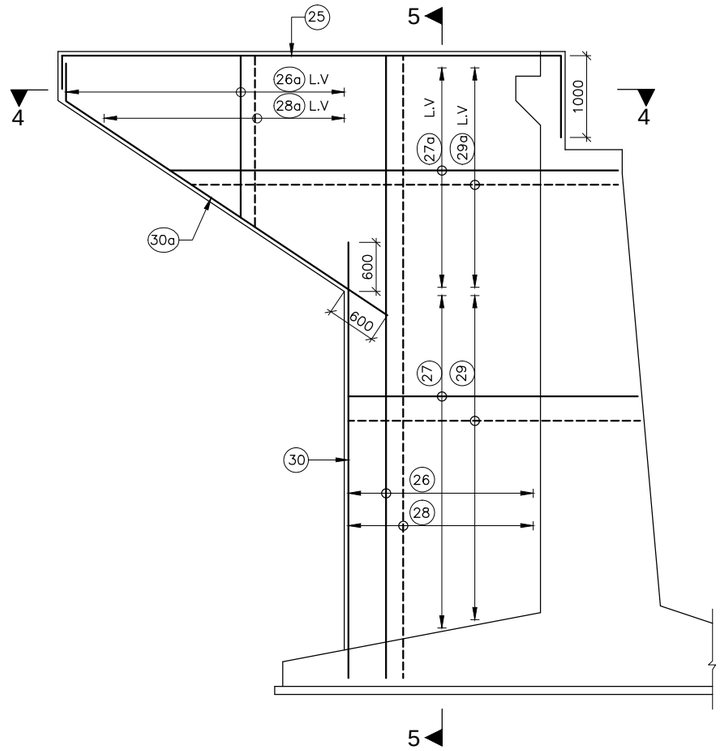

REINF. DETAILS OF RETURN WALL

(SCALE 1:50)

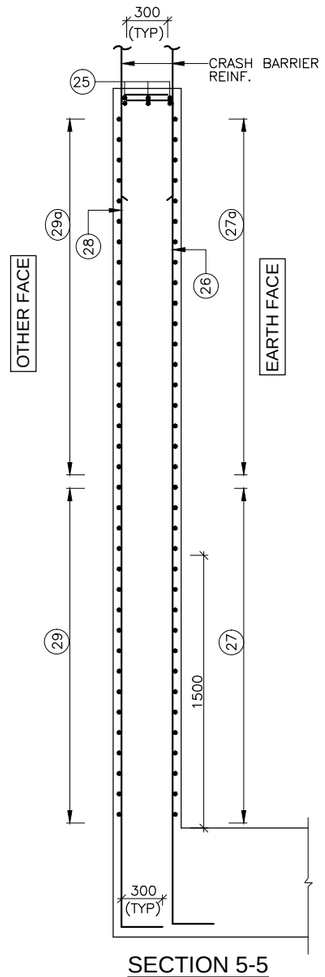

SECTION 5-5

(SCALE 1:30)

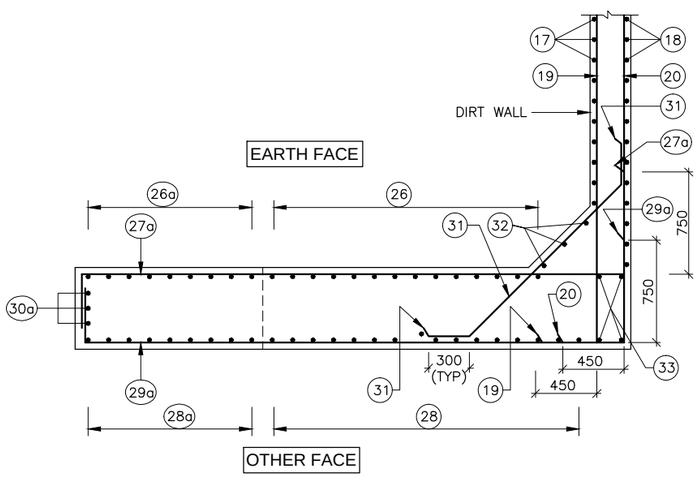

SECTION 4-4

JUNCTION DETAILS OF R.C.C.
RETURN WALL & DIRT WALL

(SCALE 1:30)

LEGEND

TOP/EARTH FACE BARS ————
BOTTOM/OTHER FACE BARS – – – – –
LENGTH VARIES L. V.

NOTES

1. FOR ALL NOTES REFER SHEET 1 OF 2 OF THIS DRG.

REINF. SCHEDULE

MARKS		DESCRIPTION	SHAPE
SHAFT	1	32 ϕ –90 c/c	
	2	20 ϕ –90 c/c	
	3	16 ϕ @110c/c	
	4	10 ϕ @220c/c	
	5	16 ϕ –6 Nos. B/F	
FOUNDATION	6	25 ϕ @180c/c	
	7	25 ϕ @180c/c	
	8	16 ϕ @180c/c	
	9	16 ϕ @180c/c	
	10	16 ϕ @180c/c	
	11	10 ϕ @150c/c	
	12	12 ϕ –3 Nos.	
	12a	12 ϕ @150c/c (LINKS ON ALTERNATE 8 / 6 BARS)	
CAP	13	12 ϕ –5 Nos.	
	14	12 ϕ –5 Nos.	
	15	12 ϕ @150c/c	
	16	12 ϕ –2 Nos.	
DIRT WALL	17	12 ϕ @200c/c	
	18	10 ϕ @150c/c	
	19	10 ϕ @200c/c	
	20	10 ϕ @200c/c	
	21	12 ϕ –5 Nos.	
	22	12 ϕ @150c/c	
	23	2L–ϕ10–STRPS.	
	24	20 ϕ –3 Nos.	
RETURN WALL	25	32 ϕ –3 Nos.	
	26	20 ϕ @150c/c	
	26a	20 ϕ @150c/c	
	27	16 ϕ @150c/c	
	27a	16 ϕ @150c/c	
	28	12 ϕ @125c/c	
	28a	12 ϕ @125c/c	
	29	12 ϕ @200c/c	
	29a	12 ϕ @200c/c	
	30	12 ϕ –3 Nos.	
	30a	12 ϕ –3 Nos.	
	31	12 ϕ @200c/c	
	32	12 ϕ –3 Nos.	
	33	12 ϕ –4 Nos.	

EMPLOYER	PROJECT	DESIGN CONSULTANT					
Government of Nepal Ministry of Physical Infrastructure and Transport, Department of Roads, Foreign Co-operation Branch	Nepal India Regional Trade and Transport Project (NIRTTP) (IDA CREDIT No. 5273 - NEP) Detailed Design of Kathmandu (Nagdhunga) - Naubise - Mugling Road and Bridges	Intercontinental Consultants & Technocrats Pvt.Ltd, A-8, Green Park, New Delhi - 110016 Ph : 4086-3000, Fax 2685-5252 In Joint Venture With Soosung Engineering Co. Ltd., South Korea	In Association With Full Bright Consultancy (Pvt.) Ltd. 316,Baburam Acharya Sadak, Sinamangal, Kathmandu, GPO Box: 4970, Kathmandu, Nepal	Prepared By		K.M.JOHRI	DRAWING TITLE: REINFORCEMENT DETAILS OF ABUT. SHAFT,CAP, FOOTING, DIRT WALL AND RETURN WALL FOR ABUTMENT FOR MINOR BRIDGE AT CH:- 14+407KM OVER PHEDI KHOLA (1x9.200m) PACKAGE-II (NAUBISE-GALCHI)	Scale: As Shown	Date: JUNE-2018 SHEET 3 OF 3
				Designed By		NISHTHA S.			
				Checked By		P.K.KHAN			
				Approved By		B.N.SINGH	Drawing No.: NIRTTP/NAG-MUG/PHEDI/SUB-02		

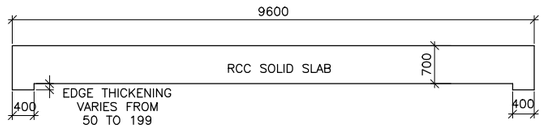

SECTION :A–A

(SCALE : 1:75)

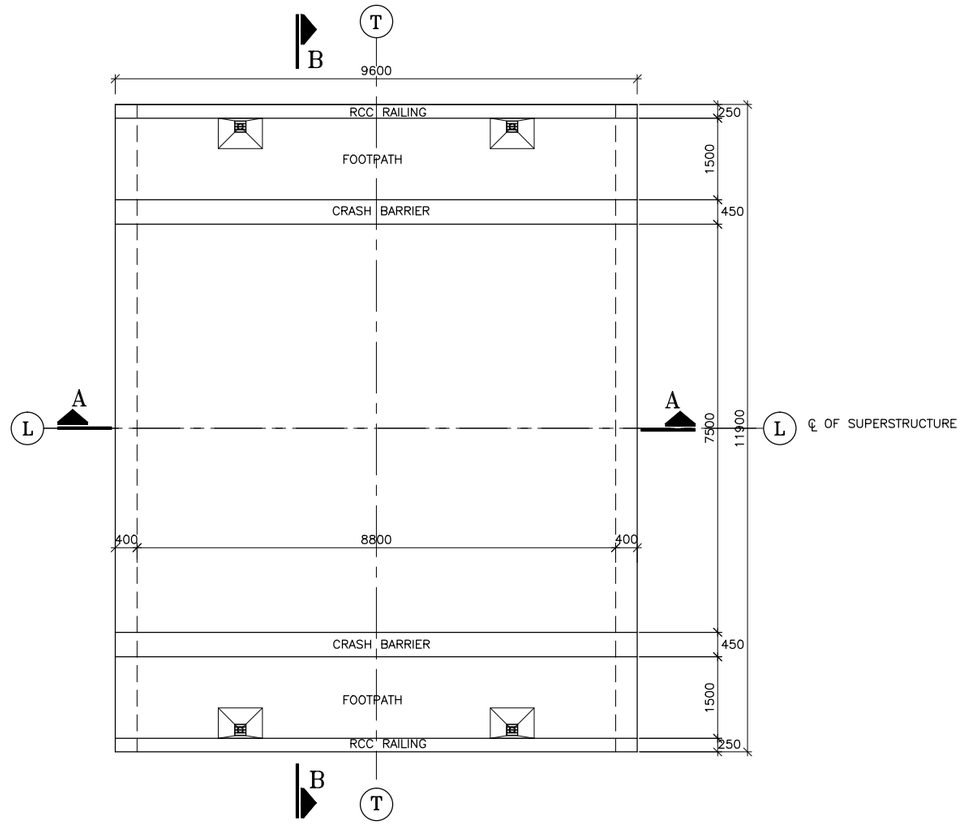

PLAN OF DECK SLAB

(SCALE : 1:75)

NOTES:–

1. ALL DIMENSIONS ARE IN MILLIMETERS UNLESS OTHERWISE MENTIONED. ONLY WRITTEN DIMENSION ARE TO BE FOLLOWED. NO DIMENSIONS SHALL BE SCALED.
2. THE BRIDGE HAS BEEN DESIGNED FOR TWO LANE TRAFFIC FOR LIVE LOAD COMBINATIONS OF CLASS A AND 70R WITH FOOTPATH LIVE LOAD. OR IRC SV VEHICLE WITH FOOTPATH LIVE LOAD. OR THREE LANE TRAFFIC FOR LIVE LOAD COMBINATIONS OF CLASS A AND 70R WITHOUT FOOTPATH LIVE LOAD AS PER IRC:6–2017, WHICHEVER GOVERNS.
3. CONCRETE SHALL BE DESIGN MIX WITH A MINIMUM 28 DAYS CHARACTERISTIC STRENGTH ON 150mm CUBE SHALL BE M–30
4. THE REINFORCING BARS SHALL BE OF THERMO MECHANICALLY TREATED (TMT) HYSD BARS (GRADE DESIGNATION Fe–500D). CONFORMING TO IS:1786 STANDARDS.
5. CLEAR COVER TO OUTER MOST REINFORCEMENT SHALL BE 40mm.
6. THE REINFORCEMENT OF CRASH BARRIER SHALL BE PLACED IN POSITION BEFORE CASTING THE DECK SLAB.
7. L–L REPRESENTS LONGITUDINAL AXIS & T–T REPRESENTS TRANSVERSE AXIS OF BRIDGE.

REFERENCE DRGS.:–

1. GENERAL ARRANGEMENT DRAWING:
   NIRTTP/NAG–MUG/PHEDI/GAD (SHEET 1 & 2)
2. REINF. DETAILS OF ABUT. SHAFT, CAP, FOOTING, DIRT WALL AND RETURN WALL FOR ABUTMENT
   NIRTTP/NAG–MUG/PHEDI/SUB–02 (SHEET 1 & 2)

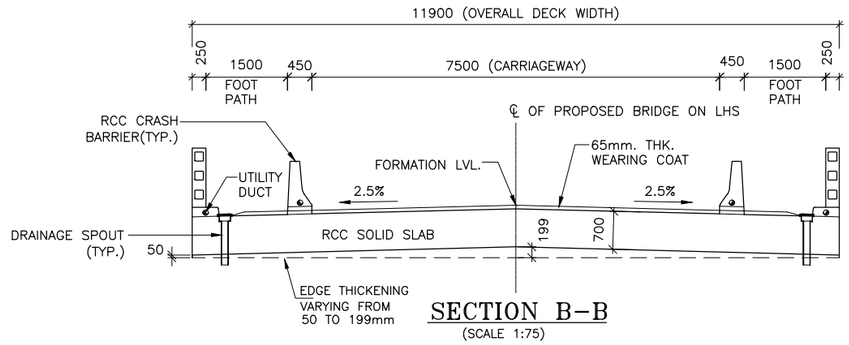

SECTION B–B

(SCALE 1:75)

EMPLOYER	PROJECT	DESIGN CONSULTANT					
Government of Nepal Ministry of Physical Infrastructure and Transport, Department of Roads, Foreign Co-operation Branch	Nepal India Regional Trade and Transport Project (NIRTTP) (IDA CREDIT No. 5273 - NEP) Detailed Design of Kathmandu (Nagdhunga) - Naubise - Mugling Road and Bridges	Intercontinental Consultants & Technocrats Pvt.Ltd, A-8, Green Park, New Delhi - 110016 Ph : 4086-3000, Fax 2685-5252 In Joint Venture With Soosung Engineering Co. Ltd., South Korea	In Association With Full Bright Consultancy (Pvt.) Ltd. 316,Baburam Acharya Sadak, Sinamangal, Kathmandu, GPO Box: 4970, Kathmandu, Nepal	Prepared By		K.M.JOHRI	DRAWING TITLE: DIMENSIONAL DETAIL OF RCC SOLID SLAB SUPERSTRUCTURE DRAWING FOR MINOR BRIDGE AT CH:- 14+407KM OVER PHEDI KHOLA (1x9.200m) PACKAGE-II (NAUBISE-GALCHI)	Scale: As Shown	Date: JUNE-2018 OCT. 2017
				Designed By		NISHTHA S.			
				Checked By		P.K.KHAN	Drawing No.: NIRTTP/NAG-MUG/PHEDI/SUP-01/R0		
				Approved By		B.N.SINGH			

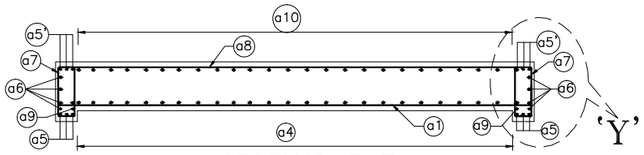

SECTION :E–E
(SCALE : 1:75)

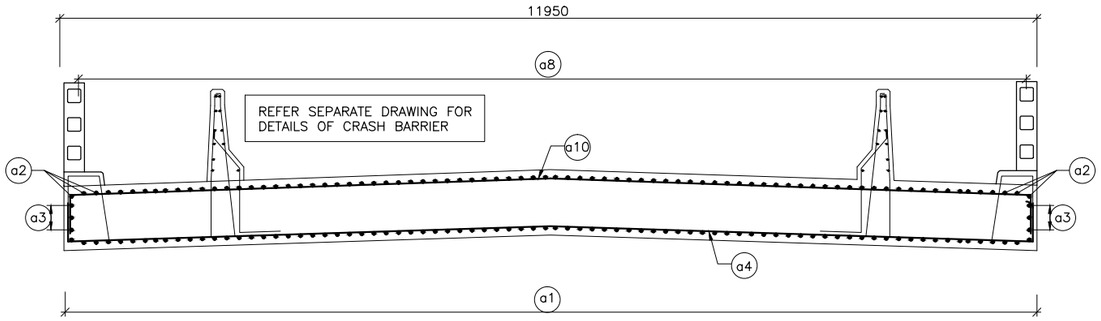

SECTION C–C
(SCALE : 1:50)

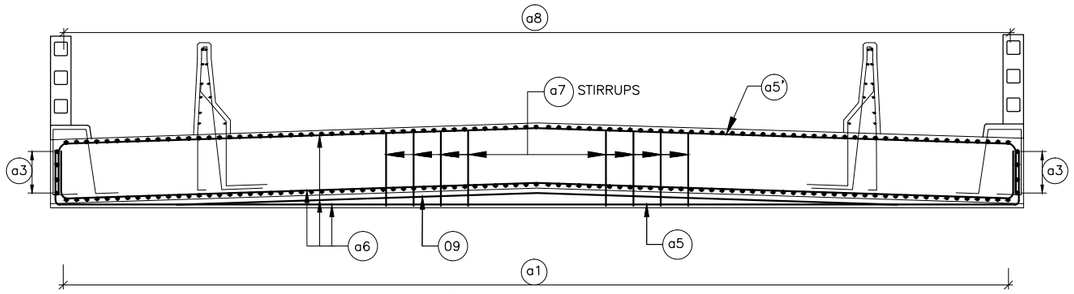

SECTION D–D
(SCALE : 1:50)

REINFORCEMENT DETAILS

BAR MKD.	REINFORCEMENT	SHAPE
a1	25 ϕ @ 125 C/C	
a2	3–16 ϕ	
a3	4–16 ϕ	
a4	12 ϕ @ 180 C/C	
a5	3–12 ϕ	
a5'	3–12 ϕ	
a6	12 ϕ @ 150 C/C	
a7	12 ϕ 2L–STIRRUPS@150c/c	
a8	12 ϕ @ 150 C/C	
a9	2–12 ϕ	
a10	12 ϕ @ 200 C/C	

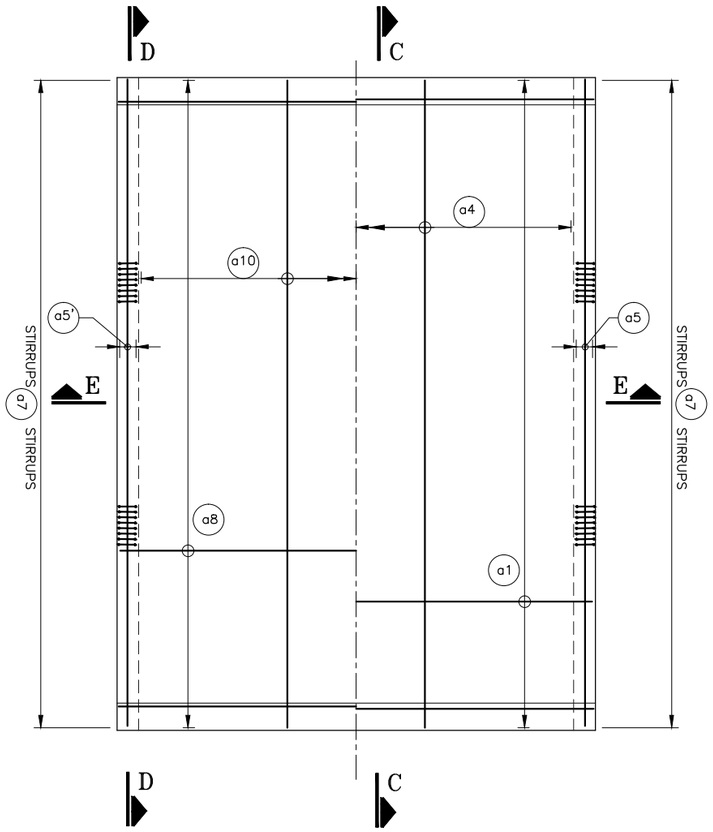

HALF PLAN SHOWING TOP REINFORCEMENT

HALF PLAN SHOWING BOTTOM REINFORCEMENT

(SCALE : 1:75)

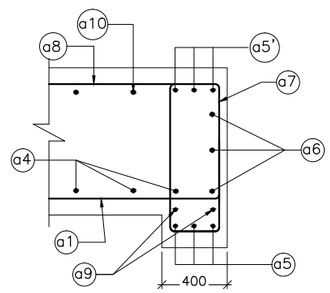

DETAIL AT 'Y'
(SCALE : 1:25)

NOTES:–

1. ALL DIMENSIONS ARE IN MILLIMETERS UNLESS OTHERWISE MENTIONED. ONLY WRITTEN DIMENSION ARE TO BE FOLLOWED. NO DIMENSIONS SHALL BE SCALED.
2. THE BRIDGE HAS BEEN DESIGNED FOR TWO LANE TRAFFIC FOR LIVE LOAD COMBINATIONS OF CLASS A AND 70R WITH FOOTPATH LIVE LOAD. OR IRC SV VEHICLE WITH FOOTPATH LIVE LOAD. OR THREE LANE TRAFFIC FOR LIVE LOAD COMBINATIONS OF CLASS A AND 70R WITHOUT FOOTPATH LIVE LOAD AS PER IRC:6–2017, WHICHEVER GOVERNS.
3. CONCRETE SHALL BE DESIGN MIX WITH A MINIMUM 28 DAYS CHARACTERISTIC STRENGTH ON 150mm CUBE SHALL BE M–30
4. UNTENSIONED STEEL SHALL BE TMT DEFORMED BARS (GRADE DESIGNATION Fe:500D) CONFORMING TO IS:1786.
5. CLEAR COVER TO OUTERMOST STEEL IS 40MM.
6. MINIMUM LAP LENGTH OF REINFORCEMENT SHALL BE KEPT AS PER IRC: 112–2011
7. MINIMUM ANCHORAGE LENGTH OF BAR BEYOND WHICH IT IS NOT REQUIRED SHALL BE AS PER IRC: 112–2011

EMPLOYER	PROJECT	DESIGN CONSULTANT					
Government of Nepal Ministry of Physical Infrastructure and Transport, Department of Roads, Foreign Co-operation Branch	Nepal India Regional Trade and Transport Project (NIRTTP) (IDA CREDIT No. 5273 - NEP) Detailed Design of Kathmandu (Nagdhunga) - Naubise - Mugling Road and Bridges	Intercontinental Consultants & Technocrats Pvt.Ltd, A-8, Green Park, New Delhi - 110016 Ph : 4086-3000, Fax 2685-5252 In Joint Venture With Soosung Engineering Co. Ltd., South Korea	In Association With Full Bright Consultancy (Pvt.) Ltd. 316,Baburam Acharya Sadak, Sinamangal, Kathmandu, GPO Box: 4970, Kathmandu, Nepal	Prepared By		K.M.JOHRI	DRAWING TITLE: REINFORCEMENT DETAIL OF RCC SOLID SLAB SUPERSTRUCTURE DRAWING FOR MINOR BRIDGE AT CH:- 14+407KM OVER PHEDI KHOLA (1x9.200m) PACKAGE-II (NAUBISE-GALCHI)	Scale: As Shown	Date: JUNE-2018 OCT. 2017
				Designed By		NISHTHA S.			
				Checked By		P.K.KHAN	Drawing No.: NIRTTP/NAG-MUG/PHEDI/SUP-02/R0		
				Approved By		B.N.SINGH			

DANGDUNGE KHOLA BRIDGE

CHAINAGE : 14+688

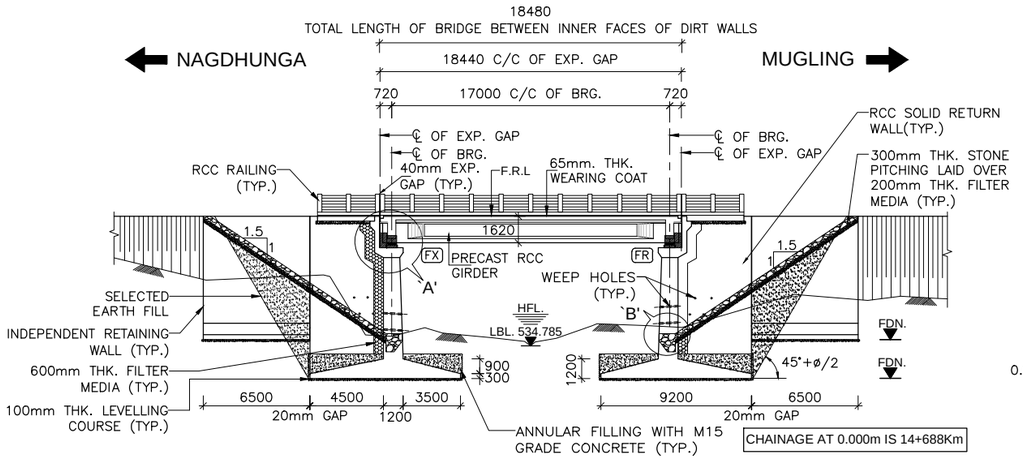

FINISHED ROAD LEVEL (m)	542.771	542.771	542.771	542.771	542.771
GROUND LEVEL (m)	539.077	535.368	534.785	535.952	537.164
FOUNDING LEVEL (m)		532.785		532.785	
CHAINAGE (m)	13.500	(−)8.500	0.000	8.500	13.500

LONGITUDINAL ELEVATION OF PROPOSED BRIDGE

(SCALE 1:250)

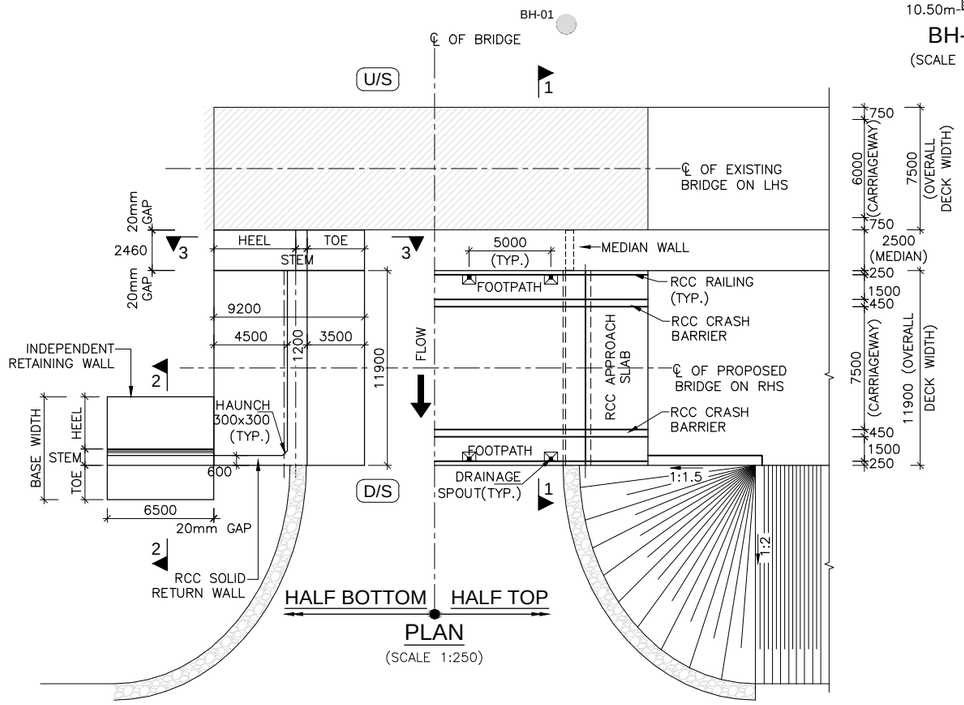

PLAN

(SCALE 1:250)

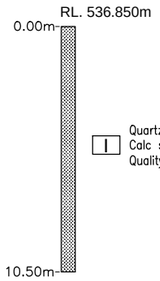

BH-01

(SCALE 1:175)

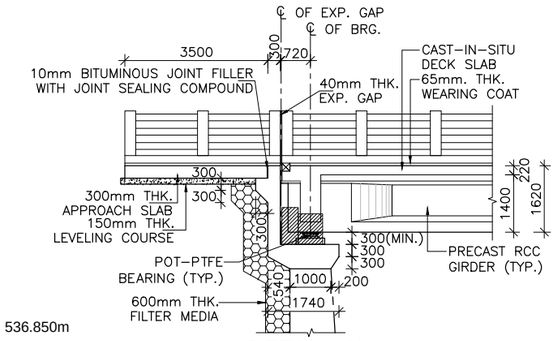

DETAIL-`A'

(SCALE 1:100)

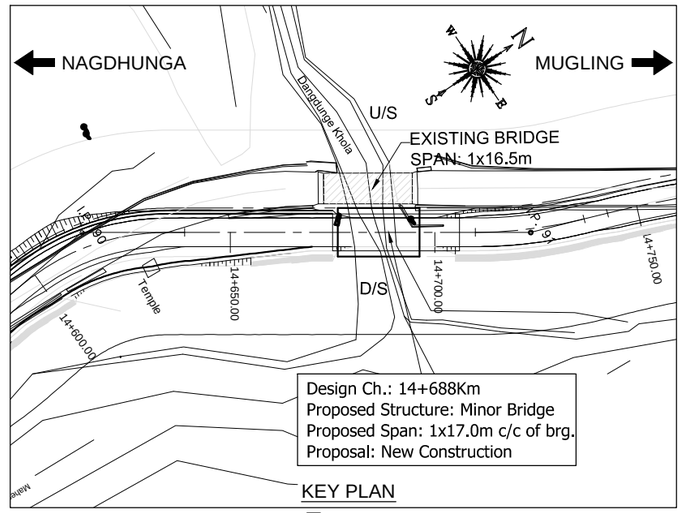

KEY PLAN

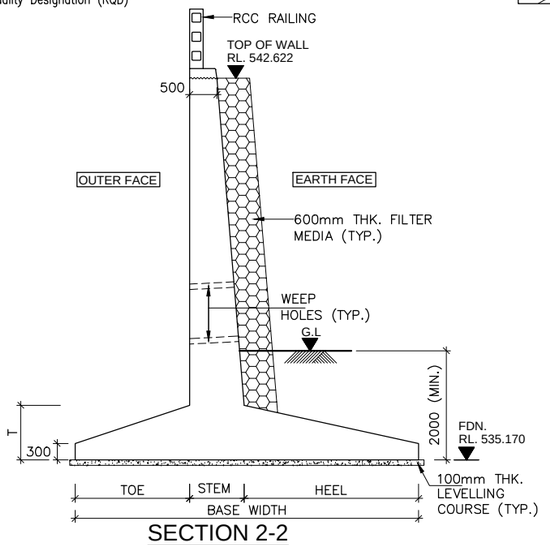

SECTION 2-2

(REFER SEPARATE DRAWING FOR DETAILS)

(SCALE 1:75)

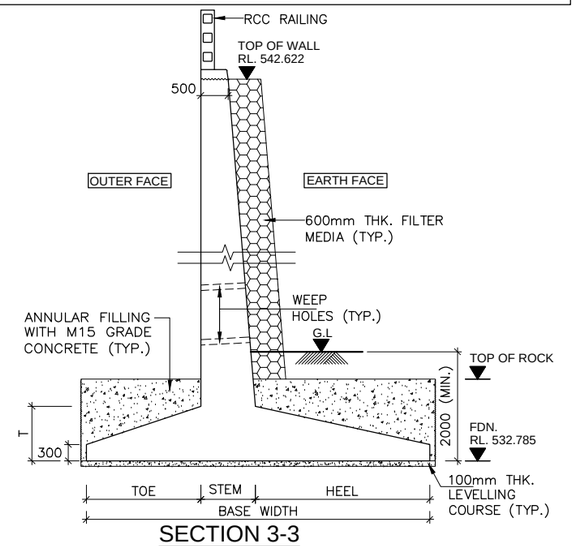

SECTION 3-3

(REFER SEPARATE DRAWING FOR DETAILS)

(SCALE 1:75)

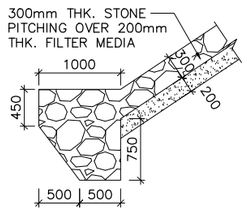

DETAIL-B

SCALE−1:50

LEGEND:

F.R.L	:	FINISHED ROAD LEVEL
H.F.L	:	HIGH FLOOD LEVEL
℄	:	CENTER LINE
LVL.	:	LEVEL
RL.	:	REDUCED LEVEL
TYP.	:	TYPICAL
THK.	:	THICK
D/S	:	DOWNSTREAM
U/S	:	UPSTREAM
G.L	:	GROUND LEVEL
L.B.L	:	LOWEST BED LEVEL
FDN.	:	FOUNDING LEVEL
FX	:	FIX
FR	:	FREE
EXISTING	:	
PROPOSED	:	
BH	:	BORE HOLE

HYDRAULIC DATA:-

DISCHARGE	− 86 cumec
VELOCITY	− 5.27m/s
H.F.L	− 536.705m
ROCK TOP LEVEL	− 536.850m

EMPLOYER	PROJECT	DESIGN CONSULTANT			
Government of Nepal Ministry of Physical Infrastructure and Transport, Department of Roads, Foreign Co-operation Branch	Nepal India Regional Trade and Transport Project (NIRTTP) (IDA CREDIT No. 5273 - NEP) Detailed Design of Kathmandu (Nagdhunga) - Naubise - Mugling Road and Bridges	Intercontinental Consultants & Technocrats Pvt.Ltd, A-8, Green Park, New Delhi - 110016 Ph : 4086-3000, Fax 2685-5252 In Joint Venture With Soosung Engineering Co. Ltd., South Korea	In Association With Full Bright Consultancy (Pvt.) Ltd. 316,Baburam Acharya Sadak, Sinamangal, Kathmandu, GPO Box: 4970, Kathmandu, Nepal		

			DRAWING TITLE:	Scale:	Date: JUNE-2018
Prepared By	Pardeep	PARDEEP	GENERAL ARRANGEMENT DRAWING FOR MINOR BRIDGE AT CH:- 14+688KM OVER DANGDUNGE KHOLA (1x17.00m) PACKAGE-II (NAUBISE-GALCHI)	As Shown	(SHEET 1 OF 2)
Designed By		AGNIMITA DAS			
Checked By		P.K.KHAN	Drawing No.: NIRTTP/NAG-MUG/ DANGDUNGE/GAD		
Approved By		B.N.SINGH			

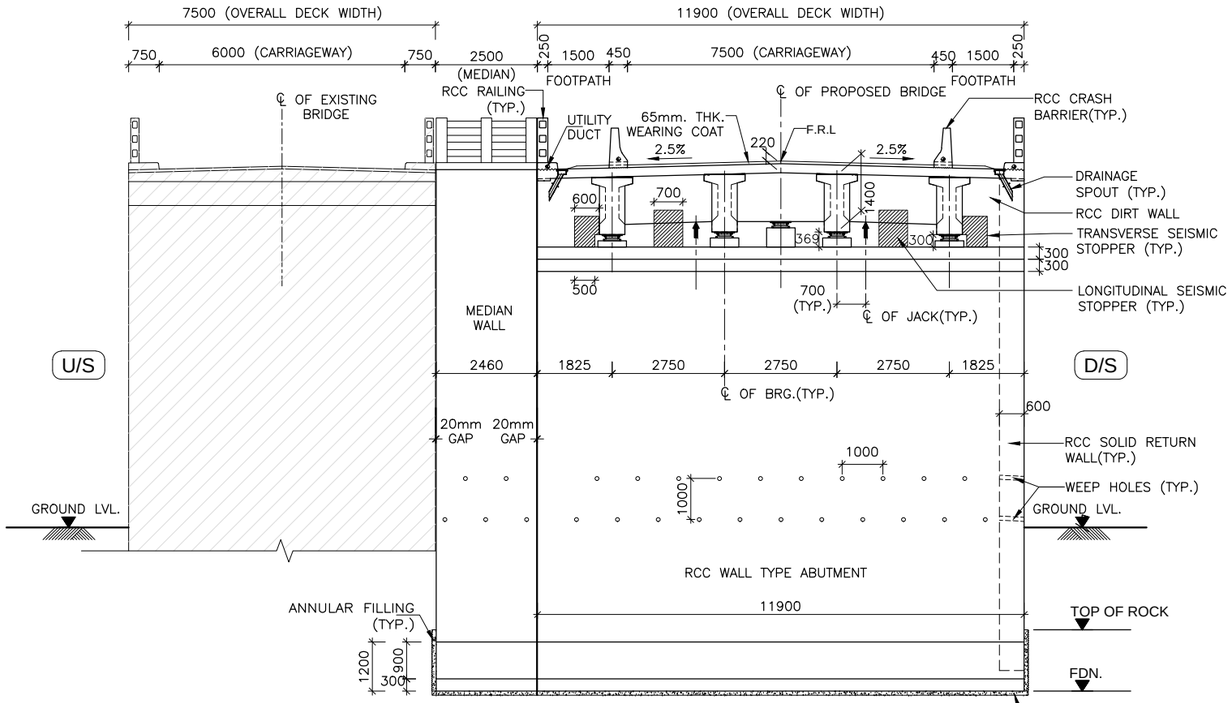

SECTION 1-1

(SCALE 1:100)

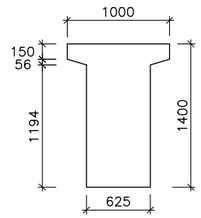

AT SUPPORT

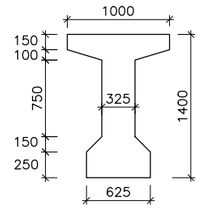

AT MID SPAN

CROSS SECTION OF PRECAST RCC GIRDER

(SCALE 1:40)

NOTES:-

1. ALL DIMENSIONS ARE IN MILLIMETER AND LEVELS ARE IN METER UNLESS OTHERWISE SPECIFIED.
2. DIMENSIONS ARE NOT TO BE SCALED ONLY WRITTEN DIMENSIONS SHALL BE FOLLOWED.
3. THE BRIDGE HAS BEEN DESIGNED FOR MOST SEVERE OF:
   (i) ONE LANE OF IRC CLASS 70R LOADING OR TWO LANES OF IRC CLASS A LOADING WHEN FOOTPATHS ARE IN POSITION.
   (ii) ONE LANE OF IRC CLASS 70R LOADING +ONE LANE OF IRC CLASS A LOADING OR 3 LANES OF IRC CLASS A LOADING WHEN FOOTPATHS ARE REMOVED.
   (iii) ONE LANE OF SV LOADING IN ACCORDANCE WITH CLAUSE 204.5 OF IRC–6:2017.
4. MINIMUM CONCRETE COVER, GRADE OF CONCRETE, MINIMUM CEMENT CONTENT & MAXIMUM W/C RATIO SHALL BE AS PER 'MODERATE' CONDITION OF EXPOSURE.
5. CONCRETE SHALL BE DESIGN MIX WITH A MINIMUM 28 DAYS CHARACTERISTIC STRENGTH ON 150mm CUBE AS FOLLOWS:
   a. LEVELING COURSE (UNDER FOUNDATION) – M10
   b. LEVELING COURSE (UNDER APPROACH SLAB) – M15
   c. FOUNDATION – M30
   d. PEDESTAL – M40
   e. SEISMIC STOPPER – M40
   f. SUBSTRUCTURE – M30
   g. SUPERSTRUCTURE – M35
   h. RETURN/RETAINING WALL – M30
   j. CRASH BARRIER – M40
   k. APPROACH SLAB – M30
6. UNTENSIONED REINFORCEMENT SHALL BE THERMO MECHANICALLY TREATED (TMT), HYSD BARS OF GRADE DESIGNATION Fe–500D CONFORMING TO IS: 1786.
7. POT/PTFE BEARINGS SHALL BE DESIGNED AS PER PROVISION OF IRC : 83 (PART–III 2002).
8. STRIP SEAL TYPE EXPANSION JOINTS SHALL BE PROVIDED AS PER PROVISION OF IRC: SP–69–2011.
9. 65MM THICK WEARING COURSE COMPRISING OF 40MM THICK ASPHALTIC CONCRETE OVERLAID WITH 25MM THICK MASTIC ASPHALT SHALL BE PROVIDED AS PER SECTION 500 OF MORT&H SPECIFICATION.
10. 100MM DIA WEEP HOLES AT 1000MM C/C STAGGERED HORIZONTALLY AND VERTICALLY SHALL BE PROVIDED IN ONE OR TWO LAYERS ABOVE G.L IN VERTICAL WALLS OF ABUTMENT, RETURN/RETAINING WALLS AT A SLOPE OF 1 VERTICAL TO 20 HORIZONTAL TOWARDS THE DRAINING FACE.
11. WATER TO BE USED IN CONCRETING AND CURING SHALL CONFORM TO CLAUSE 18.4.5 OF IRC:112–2011.
12. LAYING, COMPACTION AND EXTENT OF BACKFILL BEHIND ABUTMENTS AND RETURN/RETAINING WALLS SHALL CONSIST OF SELECTED EARTH CONFORMING TO APPENDIX:6 OF IRC:78–2014 HAVING PROPERTIES C=0, ϕ= 35°, δ=22.5° & γd = 20 KN/M^3.
13. MINIMUM CLEAR COVER TO OUTER MOST REINFORCEMENT SHALL BE AS UNDER:–
    a. SUPERSTRUCTURE – 40MM
    b. SUBSTRUCTURE (EARTH FACE) – 75MM
    c. SUBSTRUCTURE (NON EARTH FACE) – 50MM
    d. FOUNDATION – 75MM
14. THE BRIDGE IS DESIGNED FOR PROVISION OF SEISMIC ZONE–V AS PER CLAUSE 219 OF IRC:6:2017.
15. SAFE BEARING CAPACITY CONSIDERED IN DESIGN AT PROPOSED FOUNDING LEVEL IS 43 T/M^2. THIS SHALL BE ASCERTAINED BEFORE EXECUTION AT SITE BY CONFIRMATORY GEOTECHNICAL INVESTIGATIONS.
16. FILTER MEDIA SHALL BE PROVIDED AS PER APPENDIX–6 OF IRC–78:2014.
17. MINIMUM ANCHORAGE OF FOUNDATION IN SOFT ROCK SHALL BE 1.5M AND 0.6M IN HARD ROCK. ANY DEVIATION IN ROCK LEVEL FROM DESIGN SHALL BE REPORTED TO ENGINEER FOR REQUIRED CHANGES IN DESIGN NO CHANGES REQUIRED FOR INCREASE HEIGHT UP TO 50 CM.
18. WHERE FOUNDATIONS ARE PLACED ON ROCK, TRENCHES AROUND THE FOOTING SHALL BE FILLED UP WITH CONCRETE OF M15 GRADE UP TO TOP OF ROCK.
19. THIS DRAWING SHOULD BE READ IN CONJUNCTION WITH RELEVANT HIGHWAY PLAN AND PROFILE DRAWINGS.
20. ALL CHAINAGES, FRL, GL SHALL BE CONFIRMED AT SITE PRIOR TO EXECUTION.
21. FOR APPROACH SLAB, DRAINAGE SPOUTS, CRASH BARRIER, PROTECTION WORK, RETAINING WALL AND MEDIAN WALL DETAILS REFER SEPARATE DRAWINGS.
22. WHEREVER THE COMPONENTS OF EXISTING BRIDGE INTERFERES WITH THE PROPOSED BRIDGE, THAT SHALL BE DISMANTLED UPTO FOUNDATION TOP.
23. MINIMUM LONGITUDINAL GRADIENT OF 0.3% SHALL BE PROVIDED IN PROPOSED BRIDGE TO FACILITATE DRAINAGE OF DECK AS PER CLAUSE 105.3.6 OF IRC–5.
24. SIZE OF EACH INDIVIDUAL STONE PITCHING AND LAUNCHING APRON SHALL NOT BE LESS THAN 30CM IN DIAMETER AND 40KG IN WEIGHT OR AS PER TABLE 5.1 & 5.2 OF IRC:89–1997. WHERE THE REQUIRED SIZE STONES ARE NOT ECONOMICALLY AVAILABLE, STONES IN WIRE CRATES MAY BE USED IN PLACE OF ISOLATED STONES OF EQUIVALENT WEIGHT.

FACE OF OLD ABUTMENT SHALL BE MATCHED WITH PROPOSED BRIDGE ABUTMENT. IN CASE OF BIGGER SPAN IN PROPOSED SPAN, MEDIAN WALL SHALL BE PROVIDED IN FLARED SHAPE TO ALLOW SMOOTH PASSAGE OF RIVER WATER.

ABUTMENT CAP SHALL BE CAST ONLY AFTER COMPLETING THE BACK FILLING WORK UP TO ABUTMENT SHAFT TOP LEVEL.

LEGEND:

F.R.L	:	FINISHED ROAD LEVEL
H.F.L	:	HIGH FLOOD LEVEL
℄	:	CENTER LINE
LVL.	:	LEVEL
RL.	:	REDUCED LEVEL
TYP.	:	TYPICAL
THK.	:	THICK
D/S	:	DOWNSTREAM
U/S	:	UPSTREAM
G.L	:	GROUND LEVEL
L.B.L	:	LOWEST BED LEVEL
FDN.	:	FOUNDING LEVEL
FX	:	FIX
FR	:	FREE
EXISTING	:	
PROPOSED	:	
BH	:	BORE HOLE

REFERENCE DRAWINGS:-

1. DIMENSIONAL DETAILS OF ABUTMENT AND FOUNDATION:
   –NIRTTP/NAG–MUG/DANGDUNGE/SUB–01
2. REINFORCEMENT DETAILS OF ABUTMENT, DIRT WALL, RETURN WALL, PEDESTAL AND SEISMIC STOPPER:
   –NIRTTP/NAG–MUG/DANGDUNGE/SUB–02(SHEET1&2)
3. DIMENSIONAL DETAILS OF PRECAST RCC GIRDER & CAST–IN–SITU SLAB SUPERSTRUCTURE:
   –NIRTTP/NAG–MUG/DANGDUNGE/RCC–G/17m/01
4. REINFORCEMENT DETAILS OF LONGITUDINAL GIRDER:
   –NIRTTP/NAG–MUG/DANGDUNGE/RCC–G/17m/02
5. REINFORCEMENT DETAILS OF END CROSS GIRDER:
   –NIRTTP/NAG–MUG/DANGDUNGE/RCC–G/17m/03
6. REINFORCEMENT DETAILS OF RCC DECK SLAB:
   –NIRTTP/NAG–MUG/DANGDUNGE/RCC–G/17m/04(SHEET 1&2)
7. DETAILS OF LOAD AND FORCES FOR POT/PTFE BEARINGS:
   –NIRTTP/NAG–MUG/DANGDUNGE/RCC–G/17m/05

MISCELLANEOUS DRAWINGS:

1. DETAILS OF APPROACH SLAB:
   –NIRTTP/NAG–MUG/PACKAGE–II/MISC.–01
2. DETAILS OF DRAINAGE SPOUT & WEARING COAT:
   –NIRTTP/NAG–MUG/PACKAGE–II/MISC.–02
3. DIMENSIONAL & REINF. DETAILS OF R.C.C CRASH BARRIER:
   –NIRTTP/NAG–MUG/PACKAGE–II/MISC.–03
4. DIMENSIONAL & REINF. DETAILS OF R.C.C RAILING:
   –NIRTTP/NAG–MUG/PACKAGE–II/MISC.–04
5. DIMENSIONAL AND REINFORCEMENT DETAILS OF RCC RETAINING WALL/MEDIAN WALL:
   –NIRTTP/NAG–MUG/PACKAGE–II/MISC.–06

EMPLOYER	PROJECT	DESIGN CONSULTANT				
Government of Nepal Ministry of Physical Infrastructure and Transport, Department of Roads, Foreign Co-operation Branch	Nepal India Regional Trade and Transport Project (NIRTTP) (IDA CREDIT No. 5273 - NEP) Detailed Design of Kathmandu (Nagdhunga) - Naubise - Mugling Road and Bridges	Intercontinental Consultants & Technocrats Pvt.Ltd, A-8, Green Park, New Delhi - 110016 Ph : 4086-3000, Fax 2685-5252 In Joint Venture With Soosung Engineering Co. Ltd., South Korea	In Association With Full Bright Consultancy (Pvt.) Ltd. 316,Baburam Acharya Sadak, Sinamangal, Kathmandu, GPO Box: 4970, Kathmandu, Nepal	Prepared By	PARDEEP	DRAWING TITLE: GENERAL ARRANGEMENT DRAWING FOR MINOR BRIDGE AT CH:- 14+688KM OVER DANGDUNGE KHOLA (1x17.00m) PACKAGE-II (NAUBISE-GALCHI)
				Designed By	AGNIMITA DAS	
				Checked By	P.K.KHAN	Drawing No.: NIRTTP/NAG-MUG/ DANGDUNGE/GAD
				Approved By	B.N.SINGH	

Scale:	Date: JUNE-2018
As Shown	(SHEET 2 OF 2)

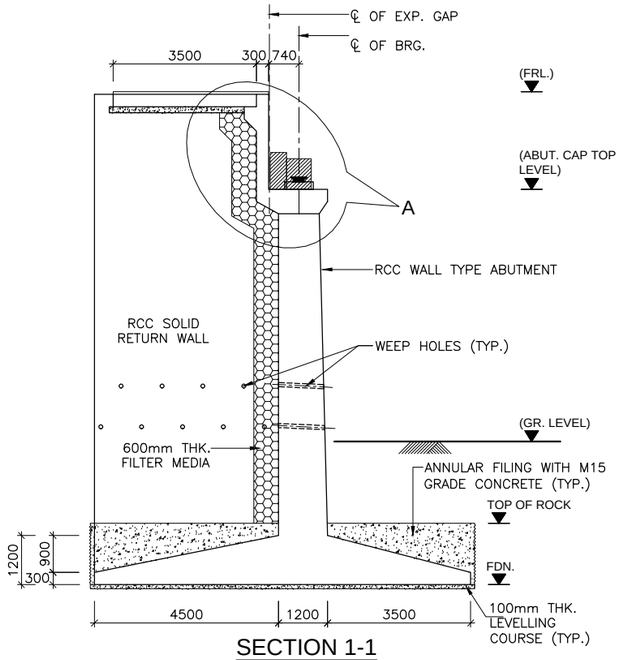

SECTION 1-1
(SCALE 1:100)

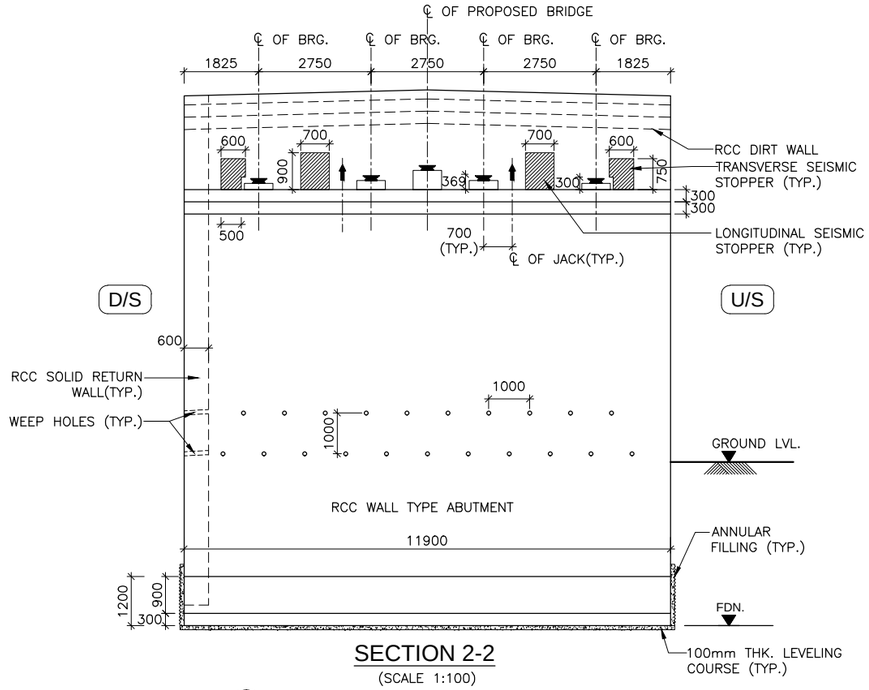

SECTION 2-2
(SCALE 1:100)

NOTES :–

1. ALL DIMENSIONS ARE IN MM, UNLESS OTHERWISE MENTIONED.
2. ONLY WRITTEN DIMENSIONS ARE TO BE FOLLOWED AND NO DIMENSION SHALL BE SCALED.
3. CONCRETE SHALL BE DESIGN MIX WITH A MINIMUM 28 DAYS CHARACTERISTIC STRENGTH ON 150MM CUBE AS FOLLOWS:
   a. LEVELING COURSE (UNDER FOUNDATION) – 10MPa
   b. LEVELING COURSE (UNDER APPROACH SLAB) – 15MPa
   c. FOUNDATION – 30MPa
   d. SUBSTRUCTURE – 30MPa
   e. APPROACH SLAB – 30MPa
   f. PEDESTAL – 40MPa
   g. SEISMIC STOPPER – 40MPa
4. UNTENSIONED REINFORCEMENT SHALL BE THERMO MECHANICALLY TREATED (TMT), HYSD BARS OF GRADE DESIGNATION Fe–500D CONFORMING TO IS: 1786.
5. MINIMUM CLEAR COVER TO OUTER MOST REINFORCEMENT SHALL BE AS UNDER
   a. SUBSTRUCTURE (EARTH FACE) – 75MM
   b. SUBSTRUCTURE (NON EARTH FACE) – 50MM
   c. FOUNDATION – 75MM
6. LL REPRESENTS LONGITUDINAL AXIS OF BRIDGE AND TT REPRESENTS TRANSVERSE AXIS OF ABUTMENT/FOUNDATION.
7. SAFE BEARING CAPACITY AT THE PROPOSED FOUNDING LEVEL HAS BEEN CONSIDERED AS 40 T/M² ON THE BASIS OF SUB SURFACE EXPLORATION RESULTS. THIS SHALL GOT CONFIRMED BEFORE EXECUTION.
8. THE LOCATION OF JACKS FOR LIFTING UP THE SUPERSTRUCTURE SHALL BE DISTINCTLY ETCHED ON SOFFIT OF SUPERSTRUCTURE AND ON TOP OF ABUTMENT CAP.
9. THIS DRAWING SHALL BE READ IN CONJUNCTION WITH THE FOLLOWING DRGS.
   - GENERAL ARRANGEMENT DRAWING REFER:
     –NIRTTP/NAG–MUG/DANGDUNGE/GAD–01
   - REINFORCEMENT DETAILS OF ABUTMENT, DIRT WALL, RETURN WALL, PEDESTAL AND SEISMIC STOPPER REFER:
     –NIRTTP/NAG–MUG/DANGDUNGE/SUB–02(SHEET1&2)

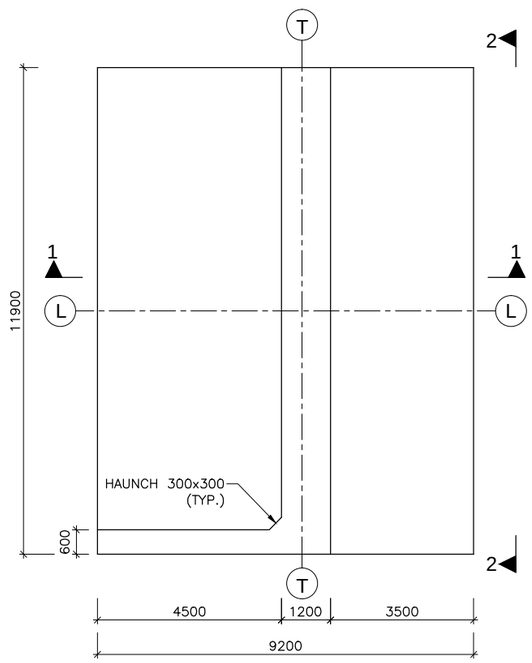

PLAN AT FOUNDATION LEVEL
(SCALE 1:100)

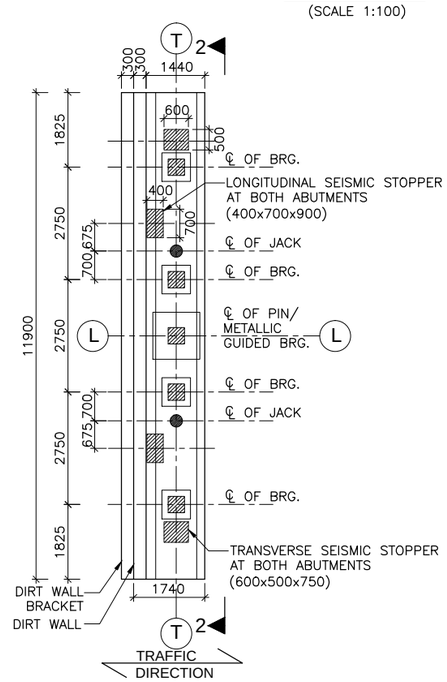

PLAN AT ABUTMENT CAP LEVEL
(SCALE 1:100)

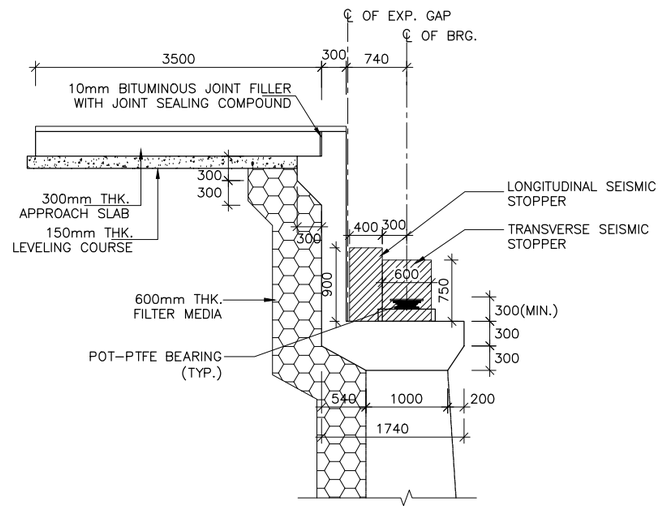

DETAIL-`A'
(SCALE 1:50)

LEVEL SCHEDULE

MARK	FRL (m)	ABUTMENT CAP TOP LVL. (m)	GR. LEVEL (m)	FDN. LEVEL (m)
ABUTMENT A1	542.771	540.670	535.368	532.785
ABUTMENT A2	542.771	540.670	535.952	532.785

LEGEND:-

- – BEARING LOCATION IN PLAN
- – JACK LOCATION IN PLAN
- – JACK LOCATION IN ELEVATION

EMPLOYER	PROJECT	DESIGN CONSULTANT
Government of Nepal Ministry of Physical Infrastructure and Transport, Department of Roads, Foreign Co-operation Branch	Nepal India Regional Trade and Transport Project (NIRTTP) (IDA CREDIT No. 5273 - NEP) Detailed Design of Kathmandu (Nagdhunga) - Naubise - Mugling Road and Bridges	Intercontinental Consultants & Technocrats Pvt.Ltd, A-8, Green Park, New Delhi - 110016 Ph : 4086-3000, Fax 2685-5252 In Joint Venture With Soosung Engineering Co. Ltd., South Korea In Association With Full Bright Consultancy (Pvt.) Ltd. 316,Baburam Acharya Sadak, Sinamangal, Kathmandu, GPO Box: 4970, Kathmandu, Nepal

Prepared By	Pardeep	PARDEEP
Designed By		AGNIMITA DAS
Checked By		P.K.KHAN
Approved By		B.N.SINGH

DRAWING TITLE:
DIMENSIONAL DETAILS OF ABUTMENT AND FOUNDATION OF MINOR BRIDGE
AT CH:- 14+688KM OVER DANGDUNGE KHOLA
PACKAGE-II (NAUBISE-GALCHI)

Drawing No.: NIRTTP/NAG-MUG/ DANGDUNGE/SUB-01

Scale: As Shown

Date: JUNE-2018

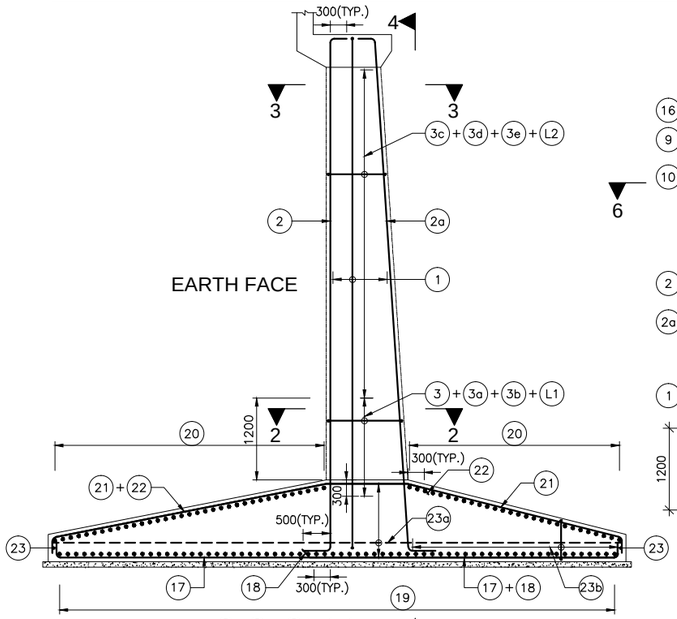

SECTION 1-1
(SCALE 1:75)

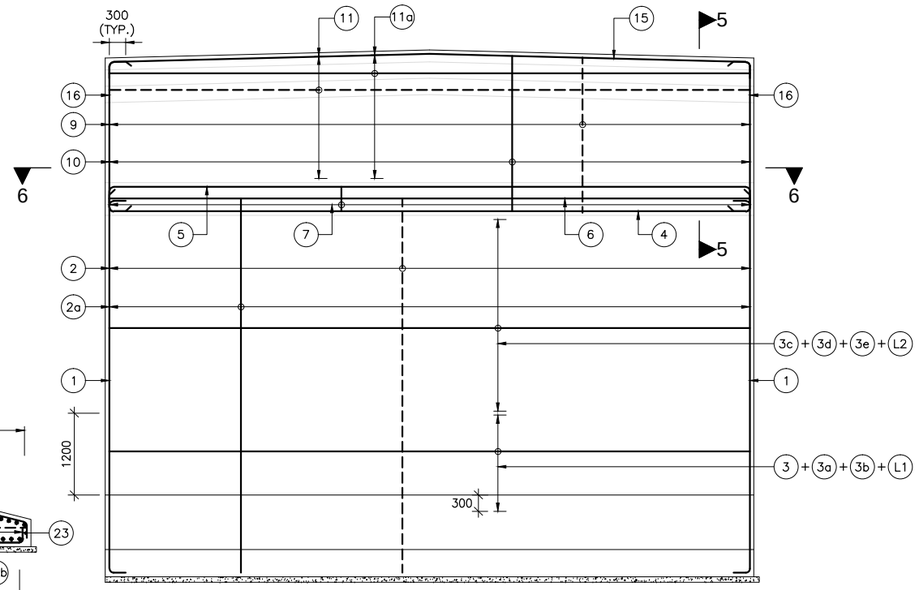

SECTION 4-4
(SCALE 1:75)
(FOUNDATION REINFORCEMENT & CORBEL REINFORCEMENT NOT SHOWN FOR CLARITY)

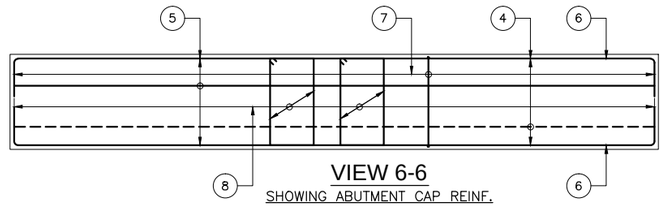

VIEW 6-6
SHOWING ABUTMENT CAP REINF.
(SCALE 1:75)

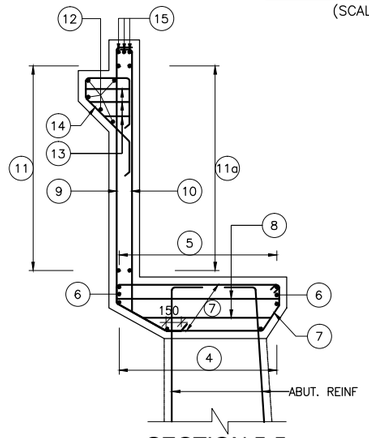

SECTION 5-5
(SCALE 1:40)

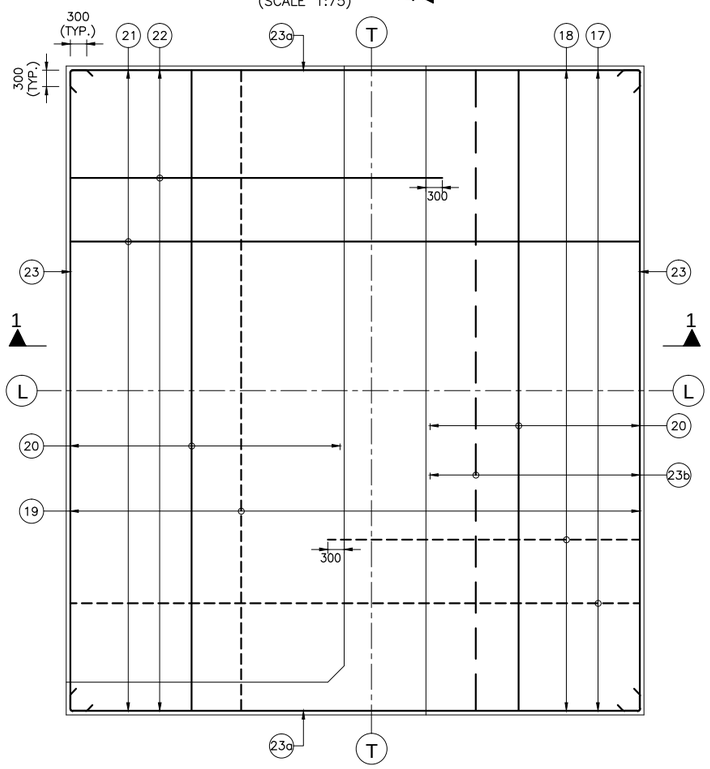

FOUNDATION PLAN
(SCALE 1:75)

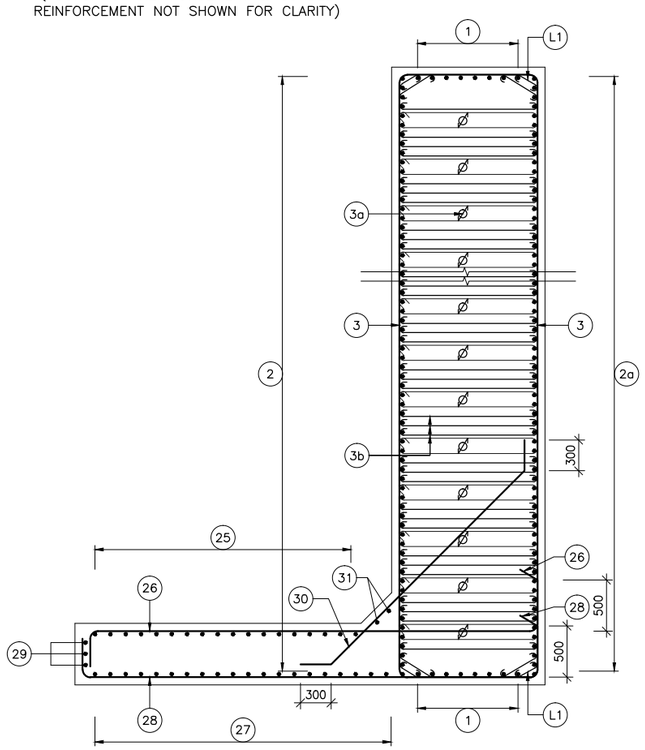

SECTION 2-2
(SCALE 1:40)

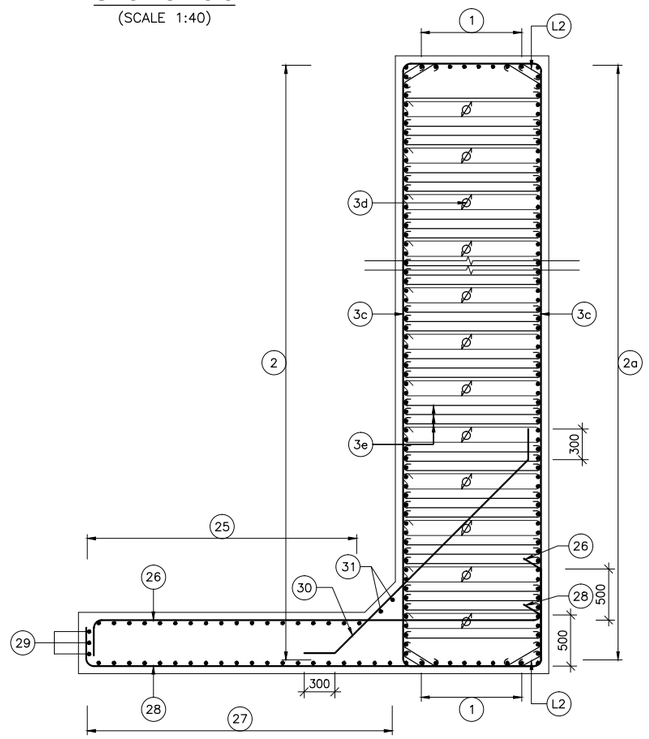

SECTION 3-3
(SCALE 1:40)

EMPLOYER	PROJECT	DESIGN CONSULTANT					
Government of Nepal Ministry of Physical Infrastructure and Transport, Department of Roads, Foreign Co-operation Branch	Nepal India Regional Trade and Transport Project (NIRTTP) (IDA CREDIT No. 5273 - NEP) Detailed Design of Kathmandu (Nagdhunga) - Naubise - Mugling Road and Bridges	Intercontinental Consultants & Technocrats Pvt.Ltd, A-8, Green Park, New Delhi - 110016 Ph : 4086-3000, Fax 2685-5252 In Joint Venture With Soosung Engineering Co. Ltd., South Korea	In Association With Full Bright Consultancy (Pvt.) Ltd. 316,Baburam Acharya Sadak, Sinamangal, Kathmandu, GPO Box: 4970, Kathmandu, Nepal	Prepared By		PARDEEP	DRAWING TITLE: REINFORCEMENT DETAILS OF ABUTMENT, DIRT WALL, RETURN WALL, PEDESTAL AND SEISMIC STOPPER FOR MINOR BRIDGE AT CH:- 14+688KM OVER DANGDUNGE KHOLA PACKAGE-II (NAUBISE-GALCHI)	Scale:	Date: JUNE-2018
				Designed By		AGNIMITA DAS		As Shown	
				Checked By		P.K.KHAN			(SHEET 1 OF 2)
				Approved By		B.N.SINGH	Drawing No.: NIRTTP/NAG-MUG/DANGDUNGE/SUB-02		

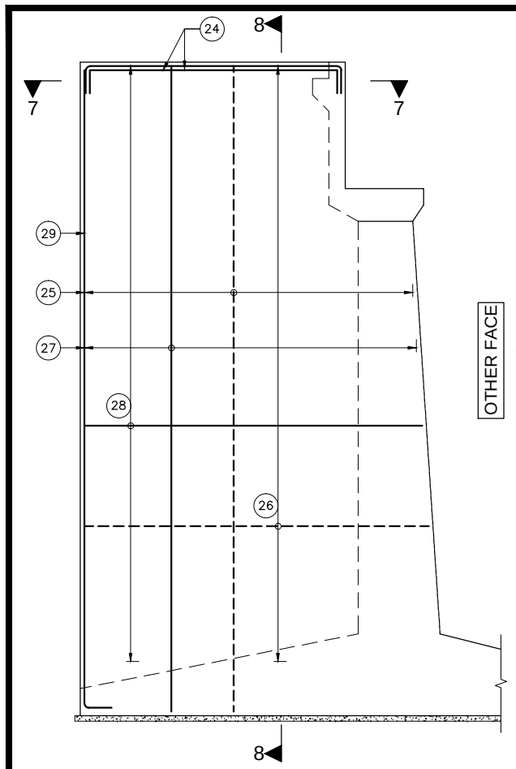

REINF. DETAILS OF RETURN WALL

(SCALE 1:75)

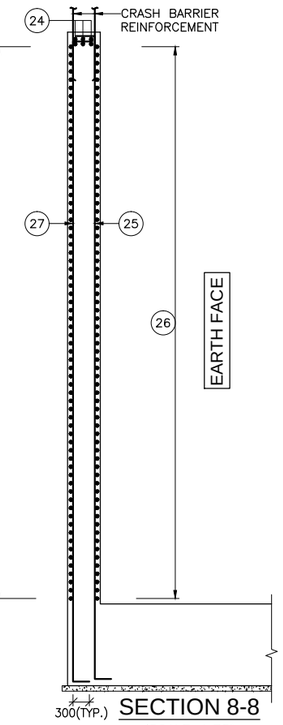

SECTION 8-8

(SCALE 1:75)

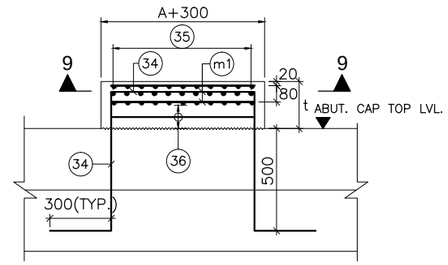

REINF. DETAILS OF PEDESTAL

(SCALE 1:20)
WHERE, A SIZE OF BEARING
AND t IS HEIGHT OF PEDESTAL

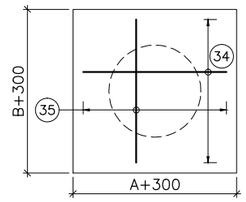

SECTION 9-9

(SCALE 1:20)
WHERE, A/B SIZE OF BEARING

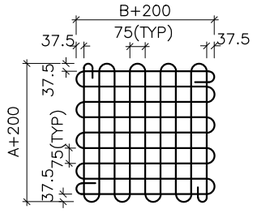

DETAIL OF MESH TYPE "M1" 8 ϕ

(IN PEDESTAL) (IN TWO LAYERS)
(SCALE 1:20)
(WHERE A & B SIZE OF BEARING)

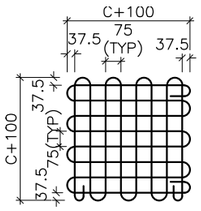

DETAIL OF MESH TYPE "M2" 8 ϕ

(UNDER JACK LOCATION)
(IN TWO LAYERS)
(SCALE 1:20)
(WHERE C= DIA OF JACK)

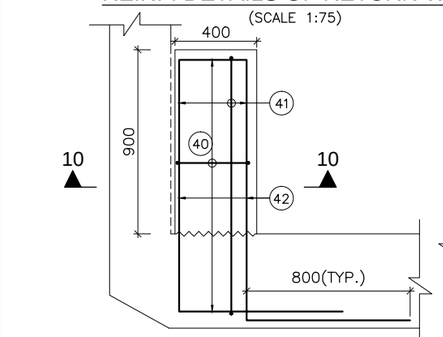

REINF. DETAILS OFLONGITUDINAL SEISMICSTOPPER

(SCALE 1:20)

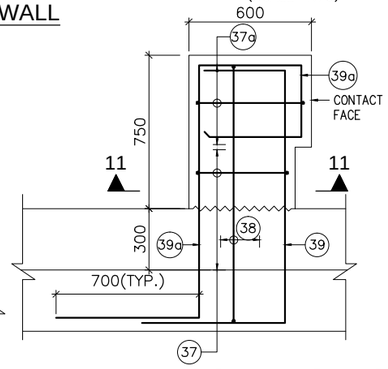

REINF. DETAILS OF TRANSVERSE SEISMIC STOPPER

(SCALE 1:20)

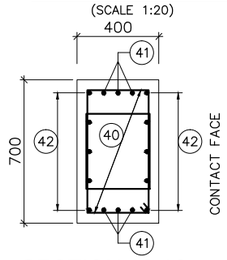

SECTION 10-10

(SCALE 1:20)

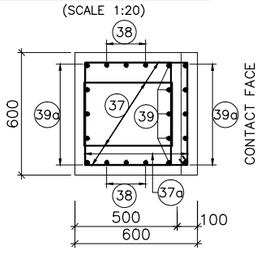

SECTION 11-11

(SCALE 1:20)

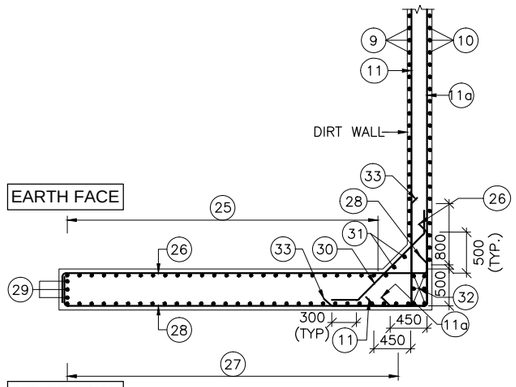

SECTION 7-7

JUNCTION DETAILS OF R.C.C. RETURN WALL & DIRT WALL

(SCALE 1:50)

9	16 ϕ @ 125 c/c	150		DIRT WALL AND BRACKET
10	10 ϕ @ 125 c/c	150 150		
11	10 ϕ @ 150 c/c	150 450		
11a	10 ϕ @ 150 c/c	150 450		
12	12 ϕ –5 NOS.			
13	2L–12ϕ@ 100c/c	400 200	(3 LAYERS)	
14	12 ϕ @ 100 c/c	300 400		
15	20 ϕ –3 NOS.		(2 LAYERS)	
16	12 ϕ –3 NOS.	300 300		
17	32 ϕ @ 180 c/c	100 100		FOUNDATION
18	25 ϕ @ 180 c/c	100		
19	20 ϕ @ 150 c/c	LV. LV.		
20	16 ϕ @ 150 c/c	LV. LV.		
21	16 ϕ @ 180 c/c	100 100		
22	16 ϕ @ 180 c/c	100		
23	12 ϕ –1 Nos	300 300		
23a	12 ϕ @ 200 c/c	300 300		
23b	22L–10ϕ@ 150c/c	360 360 360	STIRRUPS	
24	25 ϕ –3 Nos.	500 500	IN 2 LAYERS	RETURN WALL
25	16 ϕ @100c/c	300 300		
26	16 ϕ @ 150c/c	300 800		
27	12 ϕ @100c/c	300 300		
28	10 ϕ @ 150c/c	300 500		
29	12 ϕ –3 Nos.	300		
30	12 ϕ @ 200c/c			
31	12 ϕ –2 Nos.			
32	16 ϕ –6 Nos.			
33	20 ϕ @ 150c/c	1000 1000		
34	12 ϕ @ 75c/c			RCC PEDESTAL
35	12 ϕ @ 75c/c			
36	2L–12ϕ@ 150c/c		STRPS.	
37	4L–12ϕ@ 150c/c		STRPS.	TRANSVERSE SEISMIC STOPPER
37a	2L–12ϕ@ 150c/c		STRPS.	
38	16 ϕ –3 Nos.		BOTH FACES	
39	32 ϕ –5 Nos.		BOTH FACES	
39a	25 ϕ –5 Nos.		BOTH FACES	
40	4L–12ϕ@ 200c/c		STRPS.	LONGITUDINAL SEISMIC STOPPER
41	16 ϕ –3 Nos.		BOTH FACES	
42	32 ϕ –5 Nos.		BOTH FACES	

NOTES :-

1. ALL DIMENSIONS ARE IN MM, UNLESS OTHERWISE MENTIONED.
2. ONLY WRITTEN DIMENSIONS ARE TO BE FOLLOWED AND NO DIMENSION SHALL BE SCALED.
3. CONCRETE SHALL BE DESIGN MIX WITH A MINIMUM 28 DAYS CHARACTERISTIC STRENGTH ON 150MM CUBE AS FOLLOWS:
   a. LEVELING COURSE (UNDER FOUNDATION) – 10MPa
   b. LEVELING COURSE (UNDER APPROACH SLAB) – 15MPa
   c. FOUNDATION – 30MPa
   d. SUBSTRUCTURE – 30MPa
   e. APPROACH SLAB – 30MPa
   f. PEDESTAL – 40MPa
   g. SEISMIC STOPPER – 40MPa
4. UNTENSIONED REINFORCEMENT SHALL BE THERMO MECHANICALLY TREATED (TMT), HYSD BARS OF GRADE DESIGNATION Fe–500D CONFORMING TO IS: 1786.
5. MINIMUM CLEAR COVER TO OUTER MOST REINFORCEMENT SHALL BE AS UNDER:–
   a. SUBSTRUCTURE (EARTH FACE) – 75MM
   b. SUBSTRUCTURE (NON EARTH FACE) – 50MM
   c. FOUNDATION – 75MM
6. LL REPRESENTS LONGITUDINAL AXIS OF BRIDGE AND TT REPRESENTS TRANSVERSE AXIS OF ABUTMENT/FOUNDATION.
7. MINIMUM ANCHORAGE LENGTH OF REINFORCEMENT FOR FAVOURABLE CONDITION SHALL BE AS UNDER:
   CONCRETE GRADE – M–30 – 40 x DIA OF BAR
   CONCRETE GRADE – M–40 – 34 x DIA OF BAR
   (WHERE DIA OF BAR < = 32MM.)
   FOR UNFAVOURABLE CONDITION THESE VALUES SHALL BE MULTIPLIED BY 1.43.
8. MINIMUM LAP LENGTH OF REINFORCEMENT FOR FAVOURABLE CONDITION SHALL BE AS UNDER:
   CONCRETE GRADE – M–30 – 56 x DIA OF BAR
   CONCRETE GRADE – M–40 – 48 x DIA OF BAR
9. THIS DRAWING SHALL BE READ IN CONJUNCTION WITH THE FOLLOWING DRGS.
   - GENERAL ARRANGEMENT DRAWING REFER DRG. NO. : NIRTTP/NAG–MUG/DANGDUNGE/GAD
   - DIMENSIONAL DETAILS OF ABUTMENT AND FOUNDATION REFER DRG. NO. : NIRTTP/NAG–MUG/DANGDUNGE/SUB–01

BAR SHAPE SCHEDULE

BAR MRKD.	DESCRIPTION	BAR SHAPE	REMARKS	
1	16 ϕ –8 NOS.	300 300	EACH FACE	ABUTMENT SHAFT
2	32 ϕ –115 NOS.	300 300		
2a	16 ϕ –115 NOS.	300 300		
3	16 ϕ @ 100c/c			
3a	44L–8 ϕ @ 100c/c			
3b	63LINK8 ϕ @100 c/c			
3c	16ϕ @ 200c/c			
3d	44L–8 ϕ @ 200c/c			
3e	63LINK8 ϕ @200 c/c			
L1	8LINK8 ϕ @100 c/c			
L2	8LINK8 ϕ @200 c/c			
4	12 ϕ –10 NOS.	300 300		ABUTMENT CAP
5	12 ϕ –10 NOS.	500 500		
6	12 ϕ –1 NO.	300 300	EACH FACE	
7	2L–12ϕ@ 150c/c		STIRRUPS	
8	2L–12 ϕ @ 200c/c	300	IN 2 LAYERS	

LEGEND

- - - - - - - EARTH FACE/BOTTOM FACE
——————— NON EARTH FACE/TOP FACE

EMPLOYER	PROJECT	DESIGN CONSULTANT
Government of Nepal Ministry of Physical Infrastructure and Transport, Department of Roads, Foreign Co-operation Branch	Nepal India Regional Trade and Transport Project (NIRTTP) (IDA CREDIT No. 5273 - NEP) Detailed Design of Kathmandu (Nagdhunga) - Naubise - Mugling Road and Bridges	Intercontinental Consultants & Technocrats Pvt.Ltd, A-8, Green Park, New Delhi - 110016 Ph : 4086-3000, Fax 2685-5252 In Joint Venture With Soosung Engineering Co. Ltd., South Korea In Association With Full Bright Consultancy (Pvt.) Ltd. 316,Baburam Acharya Sadak, Sinamangal, Kathmandu, GPO Box: 4970, Kathmandu, Nepal

Prepared By	Pardeep	PARDEEP
Designed By		AGNIMITA DAS
Checked By		P.K.KHAN
Approved By		B.N.SINGH

DRAWING TITLE:
REINFORCEMENT DETAILS OF ABUTMENT, DIRT WALL, RETURN WALL, PEDESTAL AND SEISMIC STOPPER FOR MINOR BRIDGE
AT CH:- 14+688KM OVER DANGDUNGE KHOLA
PACKAGE-II (NAUBISE-GALCHI)

Drawing No.:
NIRTTP/NAG-MUG/ DANGDUNGE/SUB-02

Scale: As Shown

Date: JUNE-2018

(SHEET 2 OF 2)

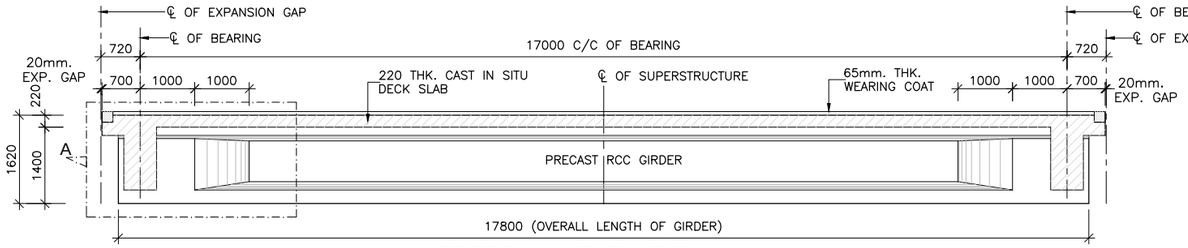

SECTIONAL ELEVATION 1 - 1

(SCALE 1:75)

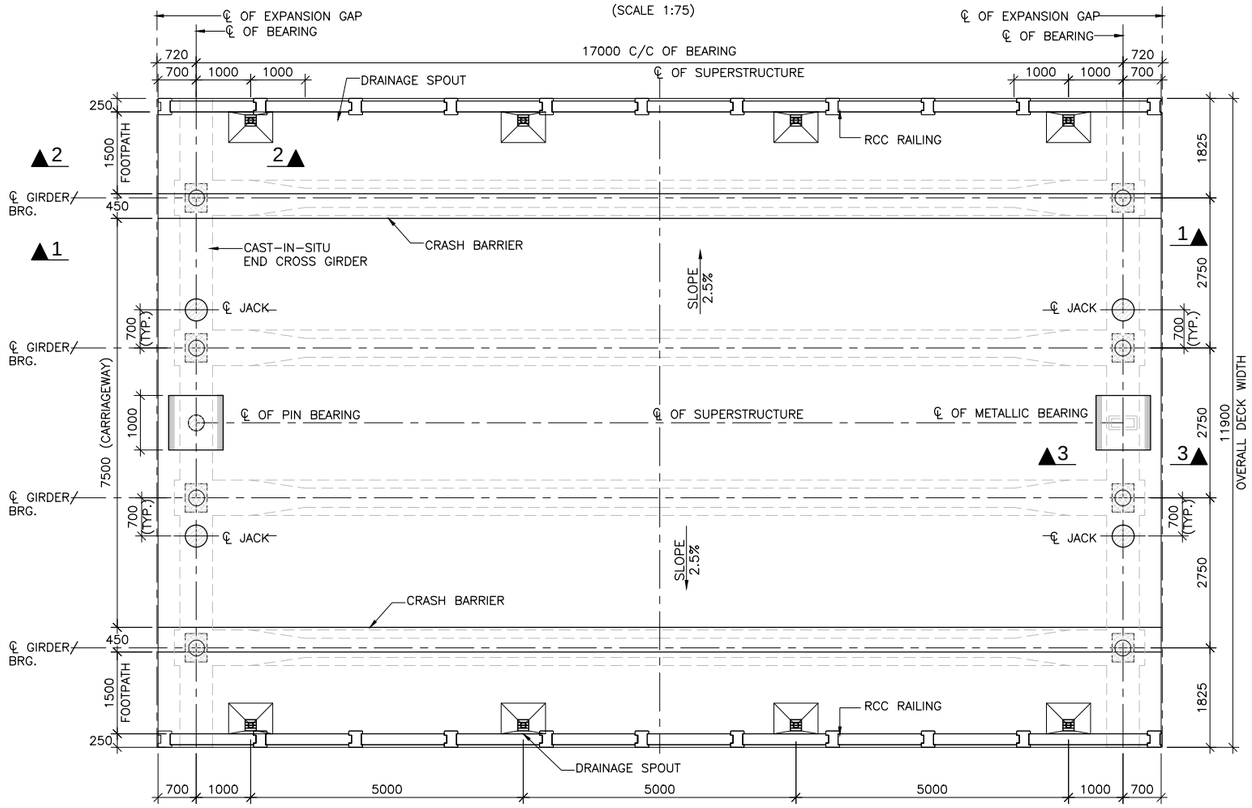

TOP PLAN OF DECK SLAB

(SCALE 1:75)

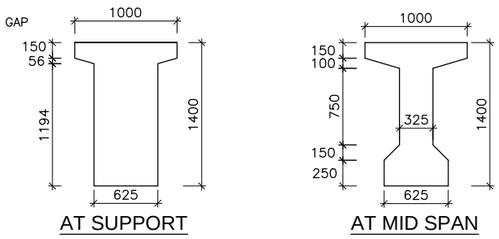

AT SUPPORT AT MID SPAN

DETAILS OF PRECAST RCC GIRDER

(SCALE 1:40)

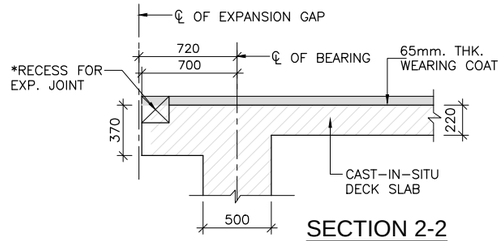

SECTION 2-2

(SCALE 1:30)

NOTES:-

1. ALL DIMENSIONS ARE IN mm UNLESS OTHERWISE MENTIONED. ONLY WRITTEN DIMENSIONS ARE TO BE FOLLOWED. NO DIMENSIONS SHALL BE SCALED.
2. (i) THE BRIDGE IS TO BE DESIGNED FOR ONE LANE OF IRC CLASS 70R OR 2 LANES OF IRC CLASS A LOADING WITH FOOTPATH WHICHEVER GOVERNS. (ii)THIS BRIDGE ALSO TO BE DESIGNED IRC CLASS SV LOADING: SPECIAL MULTI AXLE HYDRAULIC TRAILER VEHICLE (PRIME MOVER WITH 20 AXLE TRAILER–GVW=385 TONES)
3. CONCRETE SHALL BE DESIGN MIX WITH A MINIMUM 28 DAYS CHARACTERISTIC STRENGTH ON 150mm CUBES AS FOLLOWS :– PRECAST RCC GIRDER + RCC CAST IN SITU DECK SLAB–35 MPa
4. UNTENSIONED REINFORCEMENT SHALL BE THERMO MECHANICALLY TREATED (TMT), HYSD BARS OF GRADE DESIGNATION Fe–500D CONFORMING TO IS: 1786.
5. CLEAR COVER TO OUTER MOST STEEL SHALL BE AS UNDER:– FOR SUPER STRUCTURE–40mm.
6. 65mm. THK. WEARING COURSE COMPRISING OF 40mm THK. ASPHALTIC CONCRETE OVER LAID WITH 25mm THK. MASTIC ASPHALT SHALL BE PROVIDED AS PER SECTION 500 OF MORTH SPECIFICATIONS.
7. FOR LIFTING OF THE SUPERSTRUCTURE 2Nos. OF FREYSSINET JACKS OF CAPACITY **110t** EACH MAY BE REQUIRED AT EACH END. THE LOCATION OF JACKS FOR LIFTING OF THE SUPERSTRUCTURES TO REPLACE BEARINGS ETC. IS SHOWN ↑ THUS THIS SHALL BE DISTINCTLY ETCHED FOR EASY IDENTIFICATION ON THE ABUTMENT CAPS
8. DURING THE LIFTING OPERATION OF SUPERSTRUCTURE ALL THE JACKS PLACED UNDER THE END DIAPHRAGM IN LINE WITH THE BEARINGS SHALL BE OPERATED SIMULTANEOUSLY USING SINGLE OPERATING CONSOLE, GROUPING THE PUMP AND CONTROL SYSTEM SO AS TO ENSURE THAT THE REACTIONS ON ALL THE JACKS ARE EQUAL AT ALL TIMES.
9. PRECAST GIRDERS SHALL BE CAST IN ONE CONCRETING OPERATION IN CASTING YARD WITHOUT ANY CONSTRUCTION JOINT.
10. EACH PRECAST GIRDER WILL BE LIFTED BY USING LIFTING STRANDS AT EITHER END. DURING LIFTING, GIRDER SHALL BE KEPT PLUMB AND UPRIGHT SELF WEIGHT OF GIRDER IS **385kN.**

AGE OF GIRDER (IN DAYS)	ACTIVITY	STRENGTH OF CONC. (IN MPa)
0	CASTING OF LONGITUDINAL GIRDER AT CASTING YARD WITH PORTION OF DIAPHRAGM	–
14 to 28	POSITION OF LONGITUDINAL GIRDER ON TEMPORARY BRGS. AND HOLD THEM IN POSITION BY LATERAL BRACING. REINF. OF DECK SLAB & END DIAPHRAGM WILL BE FIXED IN POSITION	30
28	CASTING OF DECK SLAB ALONG WITH CROSS GIRDER	35
28 to 42	AVERAGE AGE OF GIRDER WHEN COMPOSITE ACTION TAKES PLACE	35
42 to 56	FIXING THE CRASH BARRIER AND LAYING OFWEARING COAT	35
56	AVERAGE AGE OF GIRDER WHEN SILD & CWLL ON IT	35

REFERENCE DRAWINGS:-

2. REINFORCEMENT DETAILS OF LONGITUDINAL GIRDER: –NIRTTP/NAG–MUG/DANGDUNGE/RCC–G/17m/02
3. REINFORCEMENT DETAILS OF END CROSS GIRDER: –NIRTTP/NAG–MUG/DANGDUNGE/RCC–G/17m/03
4. REINFORCEMENT DETAILS OF RCC DECK SLAB: –NIRTTP/NAG–MUG/DANGDUNGE/RCC–G/17m/04(SHEET 1&2)
5. DETAILS OF LOAD AND FORCES FOR POT/PTFE BEARINGS: –NIRTTP/NAG–MUG/DANGDUNGE/RCC–G/17m/05

LEGEND:-

- – CAST–IN–SITU PORTION
- – JACK LOCATION IN PLAN
- – JACK LOCATION IN ELEVATION
- – BEARING LOCATION

EMPLOYER	PROJECT	DESIGN CONSULTANT					
Government of Nepal Ministry of Physical Infrastructure and Transport, Department of Roads, Foreign Co-operation Branch	Nepal India Regional Trade and Transport Project (NIRTTP) (IDA CREDIT No. 5273 - NEP) Detailed Design of Kathmandu (Nagdhunga) - Naubise - Mugling Road and Bridges	Intercontinental Consultants & Technocrats Pvt.Ltd, A-8, Green Park, New Delhi - 110016 Ph : 4086-3000, Fax 2685-5252 In Joint Venture With Soosung Engineering Co. Ltd., South Korea	In Association With Full Bright Consultancy (Pvt.) Ltd. 316,Baburam Acharya Sadak, Sinamangal, Kathmandu, GPO Box: 4970, Kathmandu, Nepal	Prepared By		K.M.JOHRI	DRAWING TITLE: DIMENSION DETAILS OF PRECAST RCC GIRDER & CAST-IN-SITU SLAB SUPERSTRUCTURE EFFECTIVE SPAN : 17.00m	Scale: As Shown	Date: JUNE-2018
				Designed By		V.CHAUDHARY			
				Checked By		P.K.KHAN	Drawing No.: NIRTTP/NAG-MUG/DANGDUNGE/RCC-G/17m/01		(SHEET 1 OF 2)
				Approved By		B.N.SINGH			

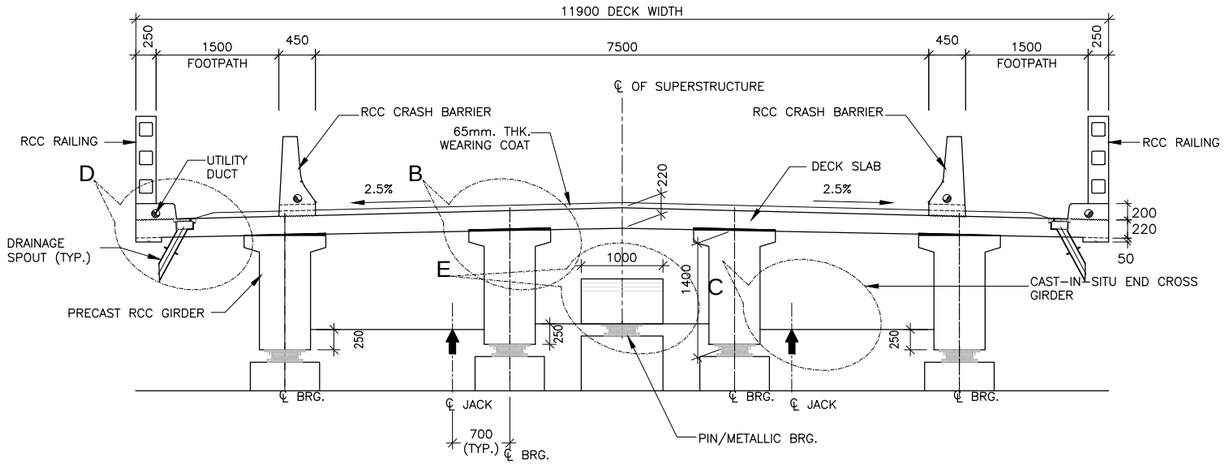

SECTION AT SUPPORT
(SCALE 1:50)

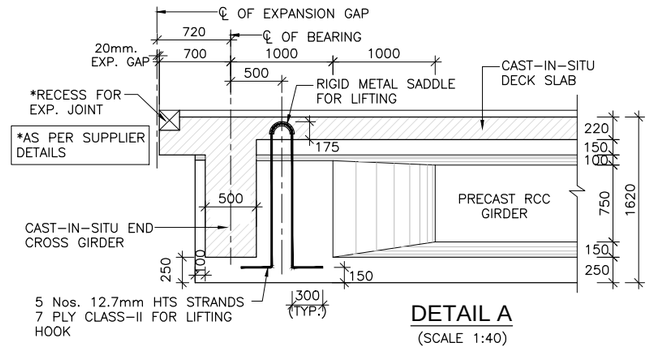

DETAIL A
(SCALE 1:40)

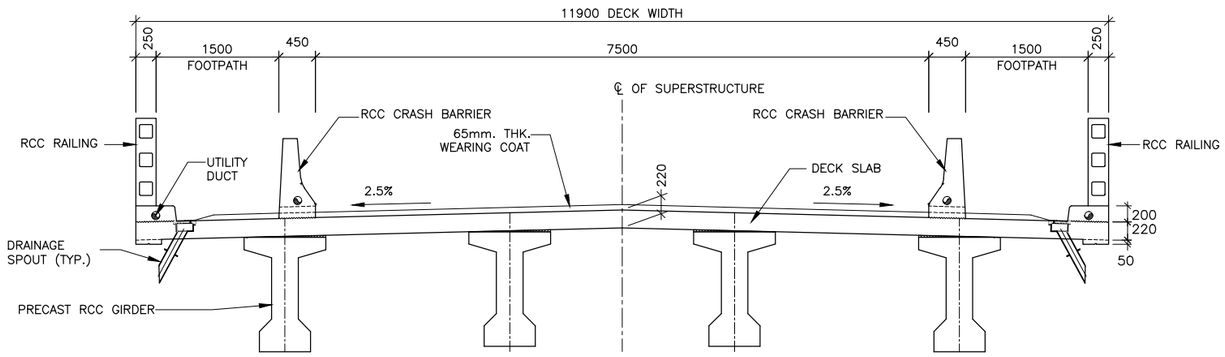

SECTION AT MID
(SCALE 1:50)

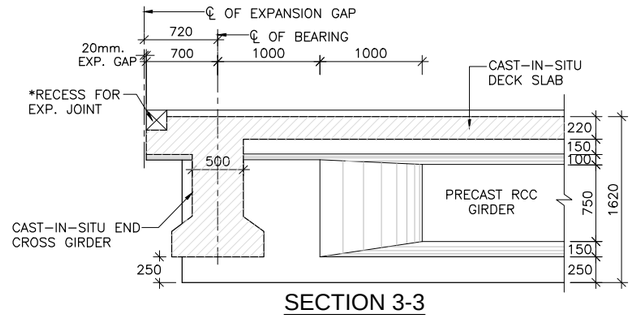

SECTION 3-3
(SCALE 1:40)

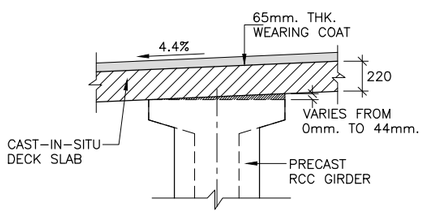

DETAIL -B
(SCALE 1:30)

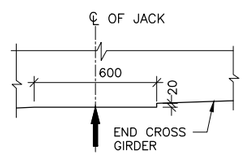

DETAIL - C
DETAIL OF CROSS GIRDERAT JACK LOCATION
(SCALE 1:20)

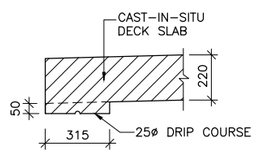

DETAIL - D
(SCALE 1:20)

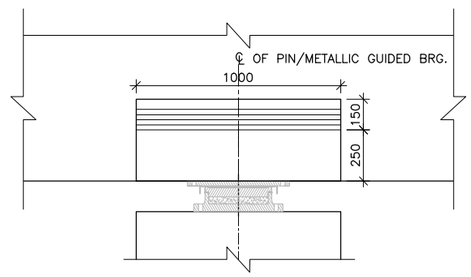

DETAIL - E
(SCALE 1:20)

EMPLOYER	PROJECT	DESIGN CONSULTANT					
Government of Nepal Ministry of Physical Infrastructure and Transport, Department of Roads, Foreign Co-operation Branch	Nepal India Regional Trade and Transport Project (NIRTTP) (IDA CREDIT No. 5273 - NEP) Detailed Design of Kathmandu (Nagdhunga) - Naubise - Mugling Road and Bridges	Intercontinental Consultants & Technocrats Pvt.Ltd, A-8, Green Park, New Delhi - 110016 Ph : 4086-3000, Fax 2685-5252 In Joint Venture With Soosung Engineering Co. Ltd., South Korea	In Association With Full Bright Consultancy (Pvt.) Ltd. 316,Baburam Acharya Sadak, Sinamangal, Kathmandu, GPO Box: 4970, Kathmandu, Nepal	Prepared By		K.M.JOHRI	DRAWING TITLE: DIMENSION DETAILS OF PRECAST RCC GIRDER & CAST-IN-SITU SLAB SUPERSTRUCTURE EFFECTIVE SPAN : 17.00m	Scale:
				Designed By		V.CHAUDHARY		As Shown
				Checked By		P.K.KHAN	Drawing No.:	
				Approved By		B.N.SINGH	NIRTTP/NAG-MUG/DANGDUNGE/RCC-G/17m/01	

Date: JUNE-2018

(SHEET 2 OF 2)

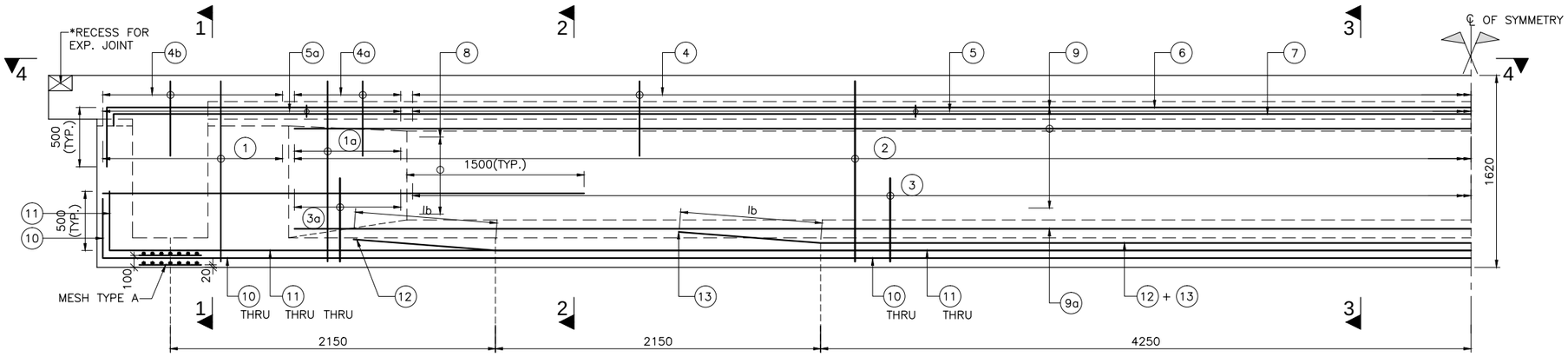

SECTIONAL ELEVATION OF GIRDER

(SCALE 1:30)

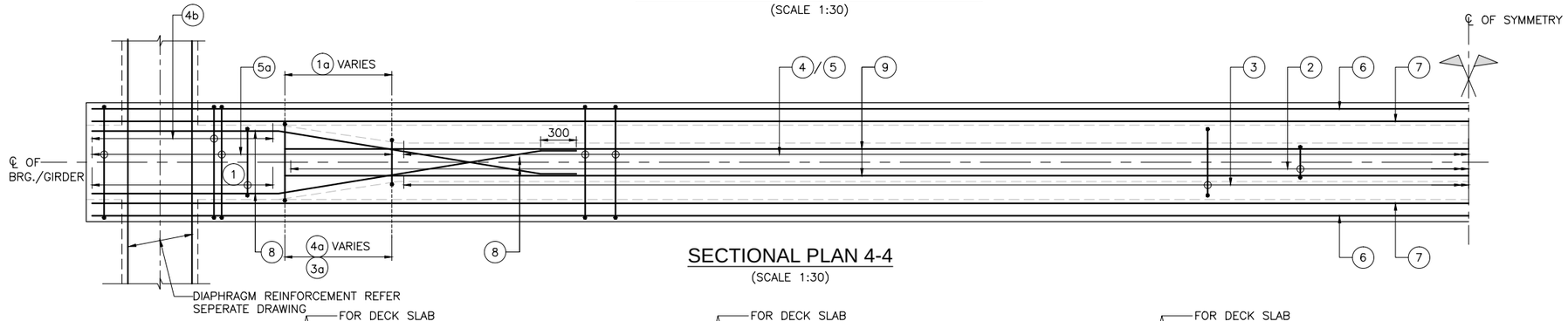

SECTIONAL PLAN 4-4

(SCALE 1:30)

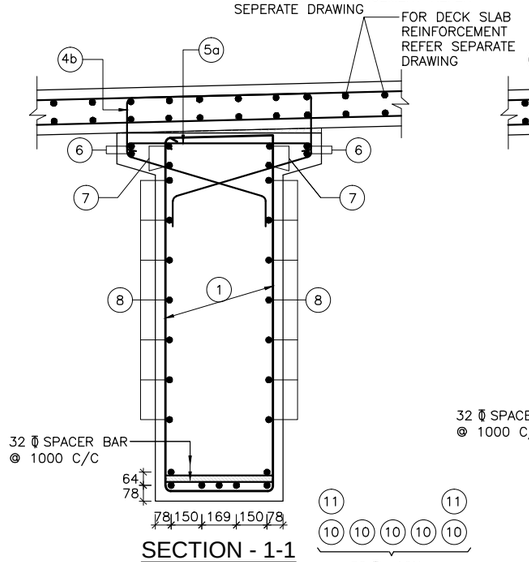

SECTION - 1-1

(SCALE 1:20)

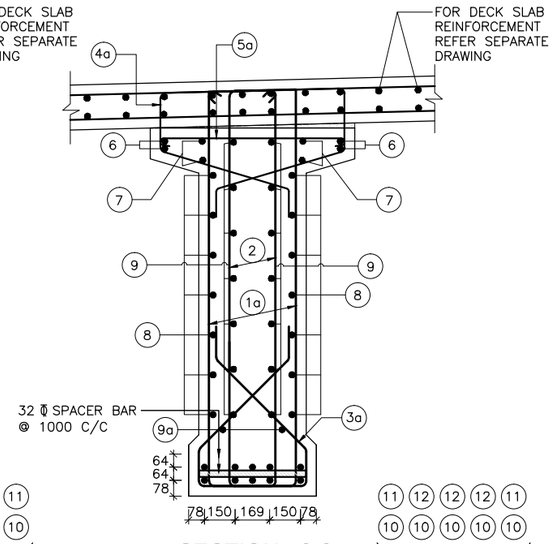

SECTION - 2-2

(SCALE 1:20)

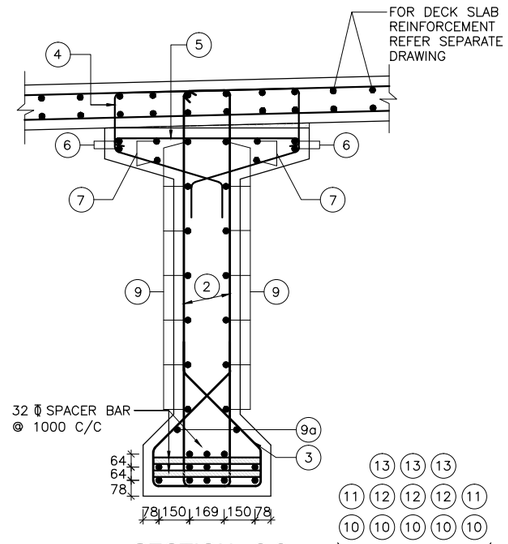

SECTION - 3-3

(SCALE 1:20)

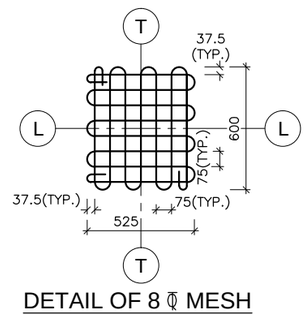

DETAIL OF 8 ϕ MESH TYPE "A"

(IN TWO LAYERS)
(SCALE = 1:20)

NOTES:-

1. ALL DIMENSIONS ARE IN MILLIMETERS AND LEVELS ARE IN METERS UNLESS OTHERWISE SPECIFIED.
2. DIMENSIONS ARE NOT TO BE SCALED. ONLY WRITTEN DIMENSIONS SHALL BE FOLLOWED.
3. UNTENSIONED REINFORCEMENT SHALL BE THERMO MECHANICALLY TREATED (TMT), HYSD BARS OF GRADE DESIGNATION Fe–500D CONFORMING TO IS: 1786.
4. CLEAR COVER TO THE OUTERMOST STEEL SHALL BE 40mm UNLESS OTHERWISE SPECIFIED.
5. LAPPING OF REINFORCEMENT SHALL BE AVOIDED AS FAR AS POSSIBLE. IN CASE LAPPING OF BARS BECOMES UNAVOIDABLE, MINIMUM LAP LENGTH OF REINFORCEMENT BARS SHALL BE CALCULATED AS FOLLOW WITH MAXIMUM ALLOWABLE LAPPING (p) OF 50% ONLY. (IRC:112–2011) (CLAUSE:15.2.5.1)
   LAP LENGTH ls = α_1.lbnet
   α_1 = 1.0 FOR p%≤25%
   α_1 = 1.15 FOR 25%≤p%≤33%
   α_1 = 1.4 FOR 33%≤p%≤50%
   (IRC:112–2011) (CLAUSE:15.2.3.3)
   DEVELOPMENT LENGTH (lbnet)
   lbnet = α.lb (α = 1.0)
   lb = kϕ
   k = 40 FOR M30 (Fe500D)
   k = 36 FOR M35 (Fe500D)
   k = 34 FOR M40 (Fe500D)
   FOR UNFAVORABLE BOND CONDITION THE lb SHOULD BE MULTIPLIED BY FACTOR OF 1.43. FOR ϕ>32mm lb, SHOULD BE INCREASED BY MULTIPLYING FACTOR ($\frac{100}{132-\phi}$)

REFERENCE DRAWINGS:-

1. DIMENSIONAL DETAILS OF PRECAST RCC GIRDER & CAST–IN–SITU SLAB SUPERSTRUCTURE:
   –NIRTTP/NAG–MUG/DANGDUNGE/RCC–G/17m/01(SHEET 1&2)
2. REINFORCEMENT DETAILS OF END CROSS GIRDER:
   –NIRTTP/NAG–MUG/DANGDUNGE/RCC–G/17m/03
3. REINFORCEMENT DETAILS OF RCC DECK SLAB:
   –NIRTTP/NAG–MUG/DANGDUNGE/RCC–G/17m/04(SHEET 1&2)
4. DETAILS OF LOAD AND FORCES FOR POT/PTFE BEARINGS:
   –NIRTTP/NAG–MUG/DANGDUNGE/RCC–G/17m/05

SCHEDULE OF REINFORCEMENT

BAR MKD.	DESCRIPTION	SHAPE	REMARKS
1	2L–12 ϕ @125 C/C		STIRRUP
1a	2L–12 ϕ @125 C/C		STIRRUP (VARIES)
2	2L–12 ϕ @150 C/C		STIRRUP
3	10 ϕ @150 C/C		
3a	10 ϕ @125 C/C		(VARIES)
4	10 ϕ @150 C/C		
4a	10 ϕ @125 C/C		(VARIES)
4b	10 ϕ @125 C/C		
5	10 ϕ @150 C/C		LINKS
5a	10 ϕ @125 C/C		LINKS
6	12 ϕ –4 Nos.		
7	12 ϕ –4 Nos.		
8	10 ϕ –7 Nos.		ON EACH FACE
9	10 ϕ –7 Nos.		ON EACH FACE
9a	10 ϕ –1 Nos.		ON EACH FACE
10	32 ϕ –5 Nos.		
11	32 ϕ –5 Nos.		
12	32 ϕ –3 Nos.		
13	25 ϕ –3 Nos.		

EMPLOYER	PROJECT	DESIGN CONSULTANT					
Government of Nepal Ministry of Physical Infrastructure and Transport, Department of Roads, Foreign Co-operation Branch	Nepal India Regional Trade and Transport Project (NIRTTP) (IDA CREDIT No. 5273 - NEP) Detailed Design of Kathmandu (Nagdhunga) - Naubise - Mugling Road and Bridges	Intercontinental Consultants & Technocrats Pvt.Ltd, A-8, Green Park, New Delhi - 110016 Ph : 4086-3000, Fax 2685-5252 In Joint Venture With Soosung Engineering Co. Ltd., South Korea	In Association With Full Bright Consultancy (Pvt.) Ltd. 316,Baburam Acharya Sadak, Sinamangal, Kathmandu, GPO Box: 4970, Kathmandu, Nepal	Prepared By		K.M.JOHRI	DRAWING TITLE: REINFORCEMENT DETAILS OF LONGITUDINAL GIRDER EFFECTIVE SPAN : 17.00m
				Designed By		V.CHAUDHARY	
				Checked By		P.K.KHAN	Drawing No.:
				Approved By		B.N.SINGH	NIRTTP/NAG-MUG/DANGDUNGE/RCC-G/17m/02

Scale:	Date: JUNE-2018
As Shown	

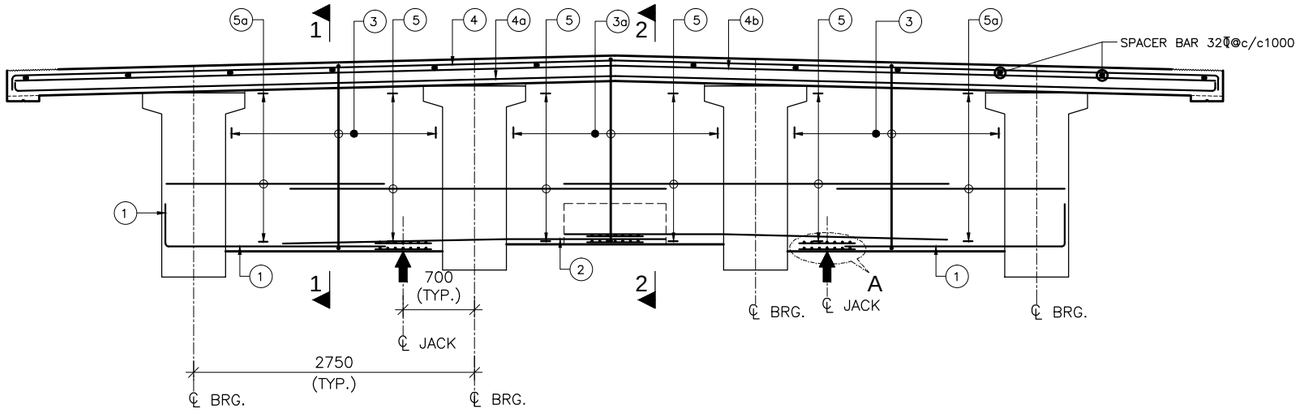

SECTIONAL ELEVATION OF END DIAPHRAGM
(SCALE 1:40)

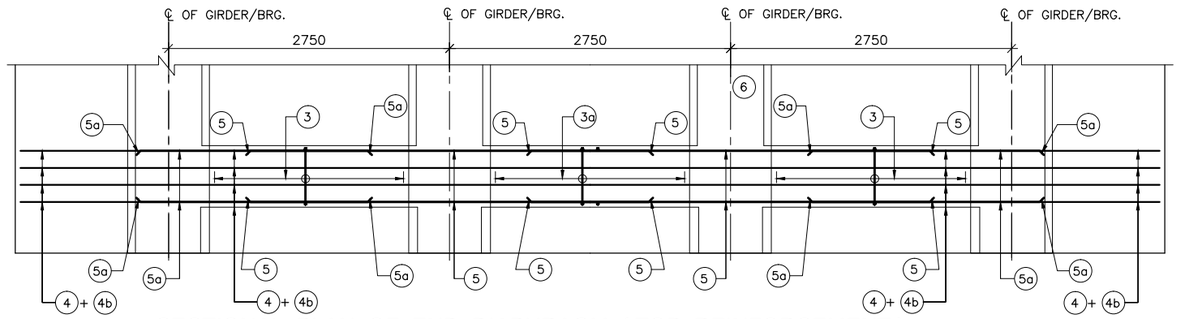

SECTIONAL PLAN OF END DIAPHRAGM (TOP REINFORCEMENT)
(SCALE 1:40)

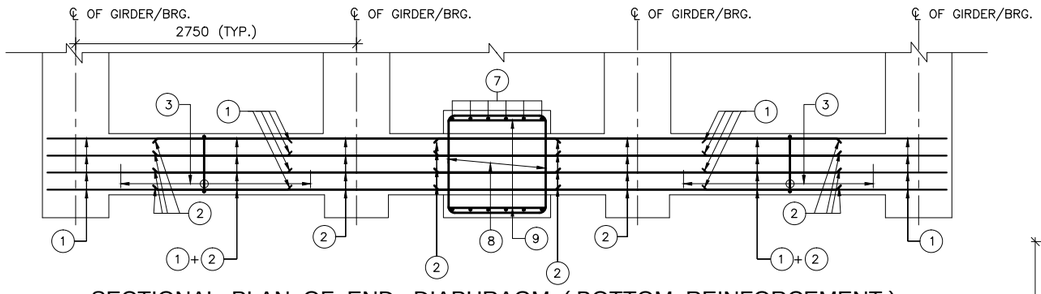

SECTIONAL PLAN OF END DIAPHRAGM (BOTTOM REINFORCEMENT)
(SCALE 1:40)

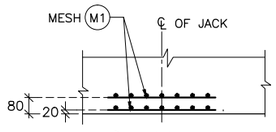

DETAIL - A
(SCALE 1:20)

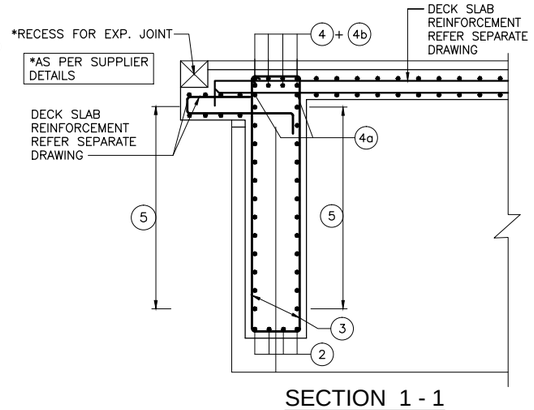

SECTION 1 - 1
(SCALE 1:30)

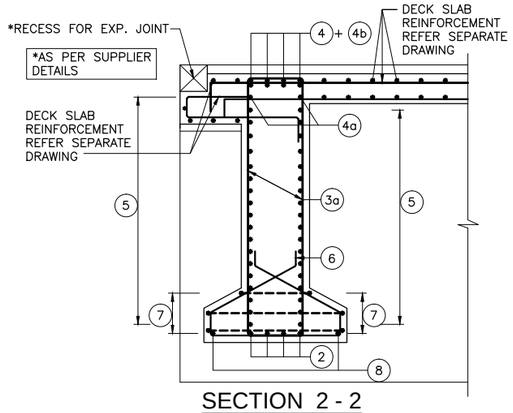

SECTION 2 - 2
(SCALE 1:30)

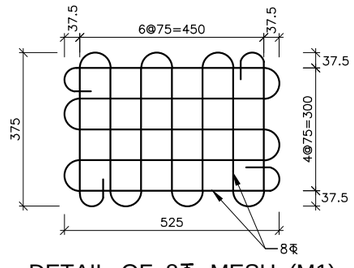

DETAIL OF 8ϕ MESH (M1) REINF. FOR JACK LOCATION
(SCALE 1:10)

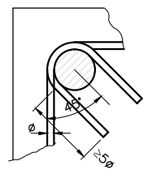

TYPICAL DETAIL INDICATING ANCHORAGE OF STIRRUP
(SCALE 1:30)

NOTES:-

1. ALL DIMENSIONS ARE IN MILLIMETERS AND LEVELS ARE IN METERS UNLESS OTHERWISE SPECIFIED.
2. DIMENSIONS ARE NOT TO BE SCALED. ONLY WRITTEN DIMENSIONS SHALL BE FOLLOWED.
3. UNTENSIONED REINFORCEMENT SHALL BE THERMO MECHANICALLY TREATED (TMT), HYSD BARS OF GRADE DESIGNATION Fe–500D CONFORMING TO IS: 1786.
4. CLEAR COVER TO THE OUTERMOST STEEL SHALL BE 40mm UNLESS OTHERWISE SPECIFIED.
5. LAPPING OF REINFORCEMENT SHALL BE AVOIDED AS FAR AS POSSIBLE. IN CASE LAPPING OF BARS BECOMES UNAVOIDABLE, MINIMUM LAP LAPPING OF REINFORCEMENT BARS SHALL BE CALCULATED AS FOLLOW WITH MAXIMUM ALLOWABLE LAPPING (p) OF 50% ONLY. (IRC:112–2011) (CLAUSE:15.2.5.1)
   LAP LENGTH ls = α1.lbnet
   α1 = 1.0 FOR p%≤25%
   α1 = 1.15 FOR 25%≤p%≤33%
   α1 = 1.4 FOR 33%≤p%≤50%
   (IRC:112–2011) (CLAUSE:15.2.3.3)
   DEVELOPMENT LENGTH (lbnet)
   lbnet = α.lb (α = 1.0)
   lb = kø
   k = 40 FOR M30 (Fe500D)
   k = 36 FOR M35 (Fe500D)
   k = 34 FOR M40 (Fe500D)

FOR UNFAVORABLE BOND CONDITION THE lb SHOULD BE MULTIPLIED BY FACTOR OF 1.43. FOR ø>32mm lb, SHOULD BE INCREASED BY MULTIPLYING FACTOR $(\frac{100}{132-ø})$

REFERENCE DRAWINGS:-

1. DIMENSIONAL DETAILS OF PRECAST RCC GIRDER & CAST–IN–SITU SLAB SUPERSTRUCTURE:
   –NIRTTP/NAG–MUG/DANGDUNGE/RCC–G/17m/01(SHEET 1&2)
2. REINFORCEMENT DETAILS OF LONGITUDINAL GIRDER:
   –NIRTTP/NAG–MUG/DANGDUNGE/RCC–G/17m/02
3. REINFORCEMENT DETAILS OF RCC DECK SLAB:
   –NIRTTP/NAG–MUG/DANGDUNGE/RCC–G/17m/04(SHEET 1&2)
4. DETAILS OF LOAD AND FORCES FOR POT/PTFE BEARINGS:
   –NIRTTP/NAG–MUG/DANGDUNGE/RCC–G/17m/05

REINFORCEMENT SCHEDULE

BAR MKD.	DESCRIPTION	SHAPE	REMARKS
1	25ϕ –4 Nos.		
2	25ϕ –4 Nos.		
3	25ϕ –2L @125 C/C		
3a	25ϕ –2L @125 C/C		
4	25ϕ –4 Nos.		
4a	16ϕ –2 Nos.		
4b	25ϕ –4 Nos.		
5	25ϕ –14 Nos.		ON EACH FACE
5a	16ϕ –14 Nos.		ON EACH FACE
6	NOT USED		
7	12ϕ –6 Nos.		
8	12ϕ –2L–3 No.		VARIES
9	10ϕ –2 Nos.		

EMPLOYER	PROJECT	DESIGN CONSULTANT					
Government of Nepal Ministry of Physical Infrastructure and Transport, Department of Roads, Foreign Co-operation Branch	Nepal India Regional Trade and Transport Project (NIRTTP) (IDA CREDIT No. 5273 - NEP) Detailed Design of Kathmandu (Nagdhunga) - Naubise - Mugling Road and Bridges	Intercontinental Consultants & Technocrats Pvt.Ltd, A-8, Green Park, New Delhi - 110016 Ph : 4086-3000, Fax 2685-5252 In Joint Venture With Soosung Engineering Co. Ltd., South Korea	In Association With Full Bright Consultancy (Pvt.) Ltd. 316,Baburam Acharya Sadak, Sinamangal, Kathmandu, GPO Box: 4970, Kathmandu, Nepal	Prepared By		K.M.JOHRI	DRAWING TITLE: REINFORCEMENT DETAILS OF END CROSS GIRDER EFFECTIVE SPAN : 17.00m
				Designed By		V.CHAUDHARY	
				Checked By		P.K.KHAN	Drawing No.: NIRTTP/NAG-MUG/DANGDUNGE/RCC-G/17m/03
				Approved By		B.N.SINGH	

Scale: As Shown

Date: JUNE-2018

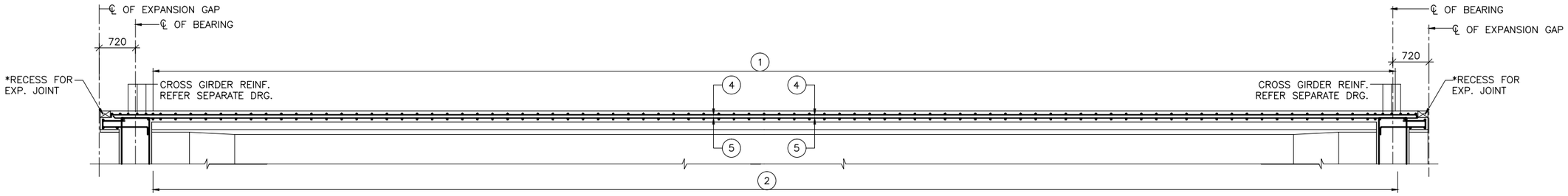

SECTION 1 - 1
(SCALE 1:60)

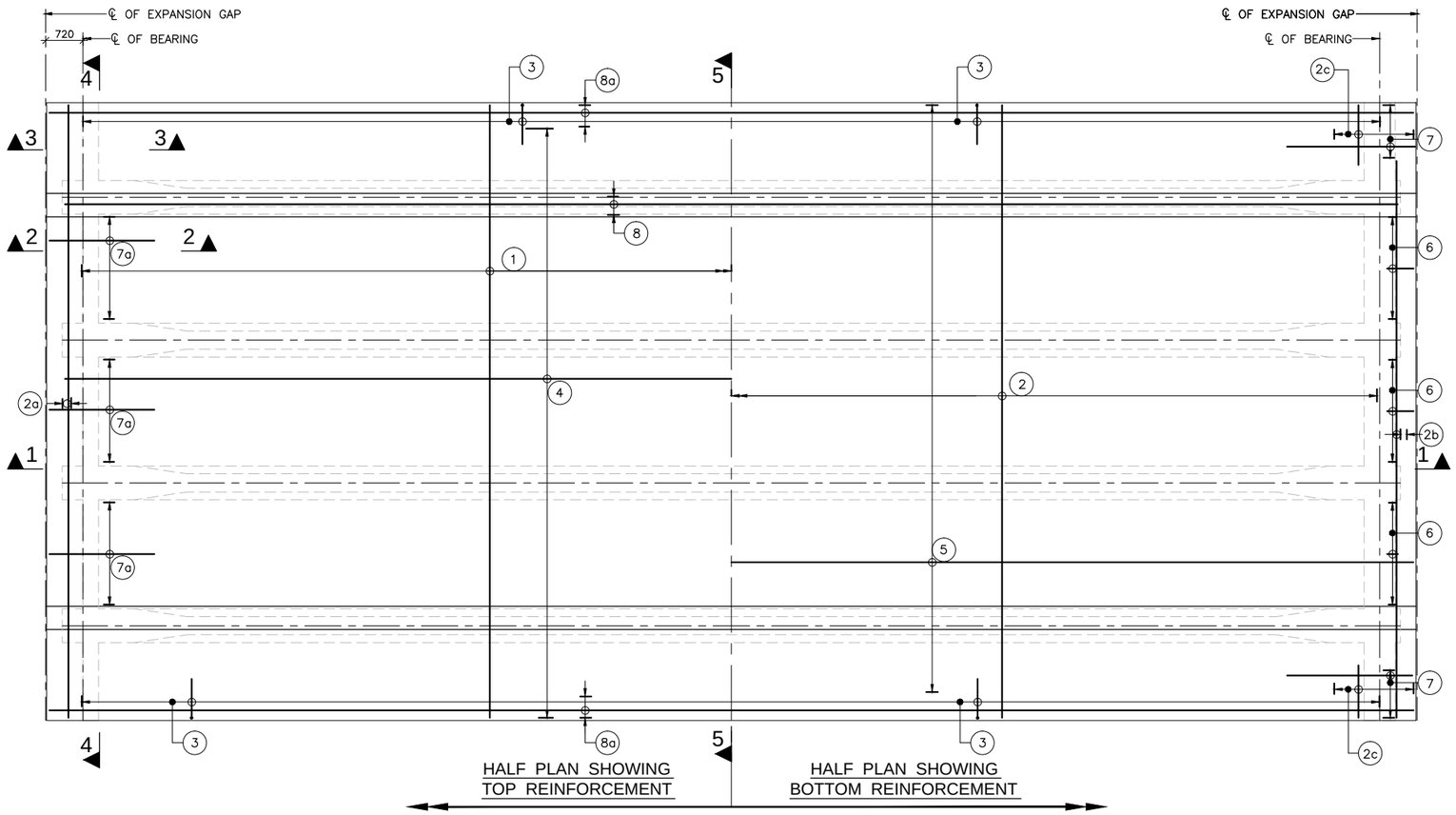

HALF PLAN SHOWING TOP REINFORCEMENT

HALF PLAN SHOWING BOTTOM REINFORCEMENT

PLAN
(SCALE 1:75)

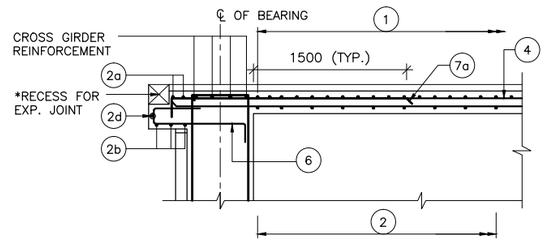

SECTION 2 - 2
(SCALE 1:40)

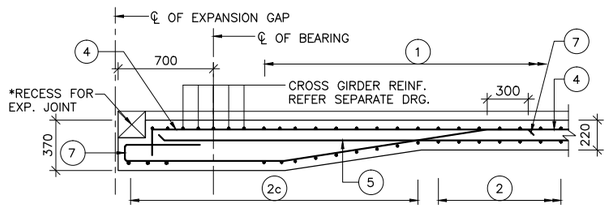

SECTION 3 - 3
(SCALE 1:30)

EMPLOYER	PROJECT	DESIGN CONSULTANT					
Government of Nepal Ministry of Physical Infrastructure and Transport, Department of Roads, Foreign Co-operation Branch	Nepal India Regional Trade and Transport Project (NIRTTP) (IDA CREDIT No. 5273 - NEP) Detailed Design of Kathmandu (Nagdhunga) - Naubise - Mugling Road and Bridges	Intercontinental Consultants & Technocrats Pvt.Ltd, A-8, Green Park, New Delhi - 110016 Ph : 4086-3000, Fax 2685-5252 In Joint Venture With Soosung Engineering Co. Ltd., South Korea	In Association With Full Bright Consultancy (Pvt.) Ltd. 316,Baburam Acharya Sadak, Sinamangal, Kathmandu, GPO Box: 4970, Kathmandu, Nepal	Prepared By	K.M.JOHRI	DRAWING TITLE: REINFORCEMENT DETAILS OF DECK SLAB EFFECTIVE SPAN : 17.00m	Scale: As Shown
				Designed By	V.CHAUDHARY		Date: JUNE-2018
				Checked By	P.K.KHAN	Drawing No.:	
				Approved By	B.N.SINGH	NIRTTP/NAG-MUG/DANGDUNGE/RCC-G/17m/04	(SHEET 1 OF 2)

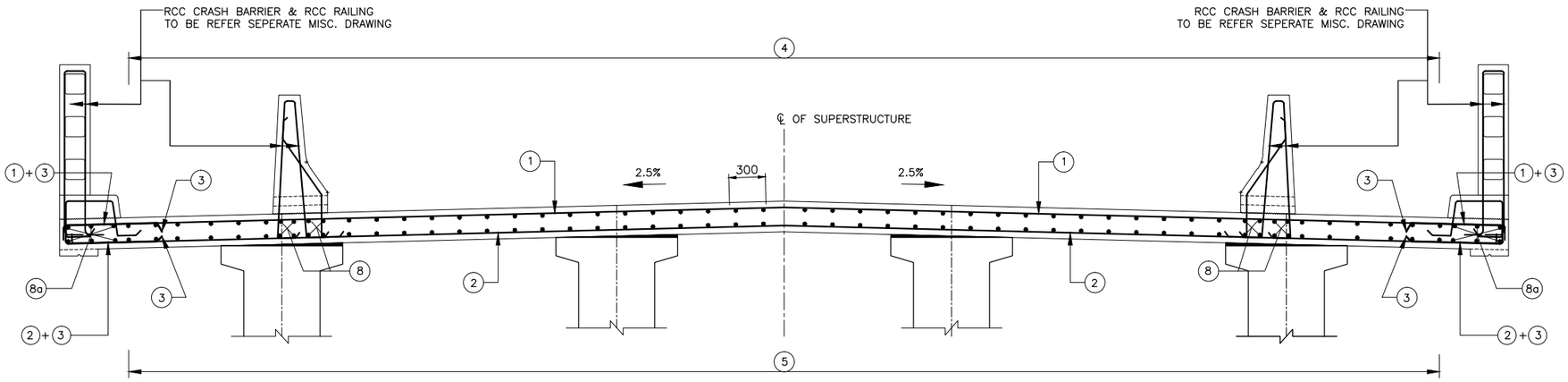

SECTION AT 5 - 5 (MID SPAN)

(SCALE 1:30)

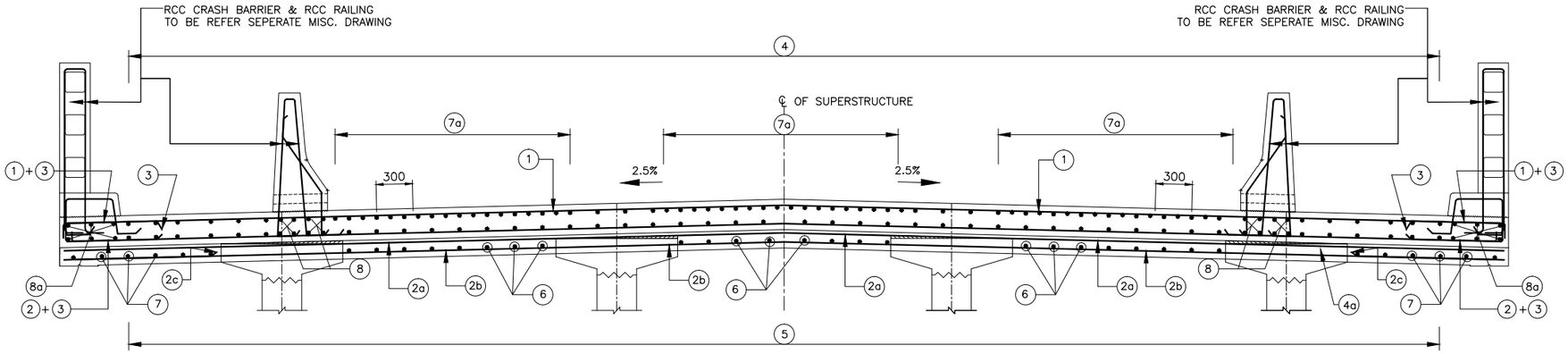

SECTION AT 4 - 4 (NEAR SUPPORT)

(SCALE 1:30)

FOR RCC CRASH BARRIER REINF.
REFER MISCELLANEOUS DRG.

NOTES:-

1. ALL DIMENSIONS ARE IN MILLIMETERS AND LEVELS ARE IN METERS UNLESS OTHERWISE SPECIFIED.
2. DIMENSIONS ARE NOT TO BE SCALED. ONLY WRITTEN DIMENSIONS SHALL BE FOLLOWED.
3. UNTENSIONED REINFORCEMENT SHALL BE THERMO MECHANICALLY TREATED (TMT), HYSD BARS OF GRADE DESIGNATION Fe–500D CONFORMING TO IS: 1786.
4. CLEAR COVER TO THE OUTERMOST STEEL SHALL BE 40mm UNLESS OTHERWISE SPECIFIED.
5. LAPPING OF REINFORCEMENT SHALL BE AVOIDED AS FAR AS POSSIBLE. IN CASE LAPPING OF BARS BECOMES UNAVOIDABLE, MINIMUM LAP LENGTH OF REINFORCEMENT BARS SHALL BE CALCULATED AS FOLLOW WITH MAXIMUM ALLOWABLE LAPPING (p) OF 50% ONLY. (IRC:112–2011) (CLAUSE:15.2.5.1)
   LAP LENGTH ls = $\alpha 1$.lbnet
   $\alpha 1$ = 1.0 FOR p%≤25%
   $\alpha 1$ = 1.15 FOR 25%≤p%≤33%
   $\alpha 1$ = 1.4 FOR 33%≤p%≤50%
   (IRC:112–2011) (CLAUSE:15.2.3.3)
   DEVELOPMENT LENGTH (lbnet)
   lbnet = α.lb (α = 1.0)
   lb = kϕ
   k = 40 FOR M30 (Fe500D)
   k = 36 FOR M35 (Fe500D)
   k = 34 FOR M40 (Fe500D)
   FOR UNFAVORABLE BOND CONDITION THE lb SHOULD BE MULTIPLIED BY FACTOR OF 1.43. FOR ϕ>32mm lb, SHOULD BE INCREASED BY MULTIPLYING FACTOR ($\frac{132-\phi}{100}$)
6. RECESS FOR EXPANSION JOINT, AS PER SUPPLIER DETAILS.

REFERENCE DRAWINGS:-

1. DIMENSIONAL DETAILS OF PRECAST RCC GIRDER & CAST–IN–SITU SLAB SUPERSTRUCTURE:
   –NIRTTP/NAG–MUG/DANGDUNGE/RCC–G/17m/01(SHEET 1&2)
2. REINFORCEMENT DETAILS OF LONGITUDINAL GIRDER:
   –NIRTTP/NAG–MUG/DANGDUNGE/RCC–G/17m/02
3. REINFORCEMENT DETAILS OF END CROSS GIRDER:
   –NIRTTP/NAG–MUG/DANGDUNGE/RCC–G/17m/03
4. DETAILS OF LOAD AND FORCES FOR POT/PTFE BEARINGS:
   –NIRTTP/NAG–MUG/DANGDUNGE/RCC–G/17m/05

REINFORCEMENT SCHEDULE

BAR MKD.	DESCRIPTION	SHAPE	REMARKS
1	12ϕ @100 C/C		
2	12ϕ @100 C/C		
2a	12ϕ @100 C/C		
2b	12ϕ @100 C/C		
2c	12ϕ @100 C/C		
2d	12ϕ –1 Nos.		
3	12ϕ @100 C/C		
4	10ϕ @200 C/C		
5	10ϕ @200 C/C		
6	12ϕ @200 C/C		
7	12ϕ @200 C/C		
7a	12ϕ @200 C/C		
8	16ϕ –8 Nos.		(ON EACH SIDE)
8a	16ϕ –6 Nos.		(ON EACH SIDE)

EMPLOYER	PROJECT	DESIGN CONSULTANT				
Government of Nepal Ministry of Physical Infrastructure and Transport, Department of Roads, Foreign Co-operation Branch	Nepal India Regional Trade and Transport Project (NIRTTP) (IDA CREDIT No. 5273 - NEP) Detailed Design of Kathmandu (Nagdhunga) - Naubise - Mugling Road and Bridges	Intercontinental Consultants & Technocrats Pvt.Ltd, A-8, Green Park, New Delhi - 110016 Ph : 4086-3000, Fax 2685-5252 In Joint Venture With Soosung Engineering Co. Ltd., South Korea	In Association With Full Bright Consultancy (Pvt.) Ltd. 316,Baburam Acharya Sadak, Sinamangal, Kathmandu, GPO Box: 4970, Kathmandu, Nepal	Prepared By	K.M.JOHRI	DRAWING TITLE: REINFORCEMENT DETAILS OF DECK SLAB EFFECTIVE SPAN : 17.00m
				Designed By	V.CHAUDHARY	
				Checked By	P.K.KHAN	Drawing No.:
				Approved By	B.N.SINGH	NIRTTP/NAG-MUG/DANGDUNGE/RCC-G/17m/04

Scale:	Date: JUNE-2018
As Shown	(SHEET 2 OF 2)

LEGEND:-

B1		FREE SLIDING POT–CUM–PTFE BEARING
B2		PIN BEARING
B3		METALLIC GUIDED BEARING

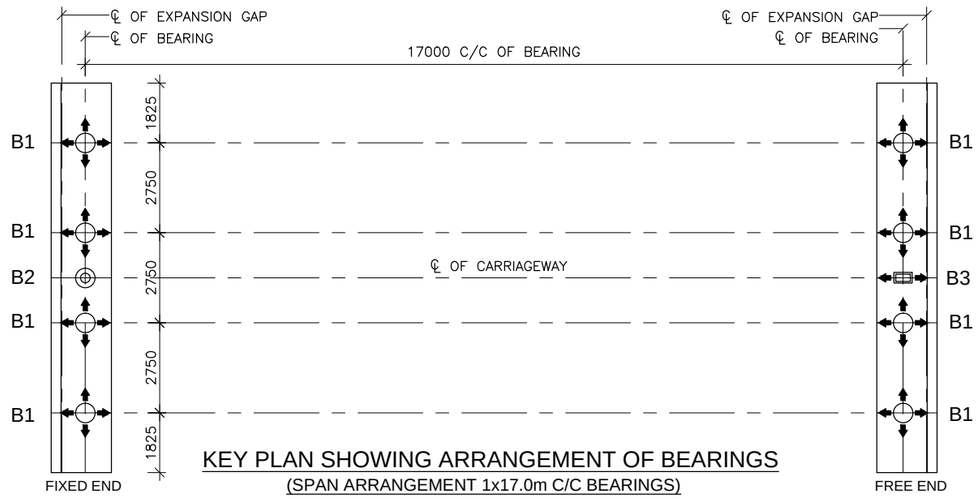

KEY PLAN SHOWING ARRANGEMENT OF BEARINGS

(SPAN ARRANGEMENT 1x17.0m C/C BEARINGS)

NOTES:–

1. MATERIAL SPECIFICATIONS, DESIGN OF BEARINGS, ACCEPTANCE CRITERIA AND INSTALLATION MORTH SHALL BE IN ACCORDANCE WITH IRC:83 (PART III)–2002 AND MOSRTH SPECIFICATIONS (FOURTH REVISION).
2. BEARINGS SHALL BE OBTAINED FROM MANUFACTURERS APPROVED BY MORTH.
3. INSTALLATION OF BEARINGS SHALL BE UNDER THE SUPERVISION OF REPRESENTATIVE OF THE MANUFACTURER.
4. FOR DESIGN LOADS AND ROTATIONS REFER TABLE IN THE DRAWING.
5. FOR BEARINGS, DETAILED SHOP DRAWINGS SHALL BE PREPARED BY THE SUPPLIER AND BE DULY APPROVED BEFORE MANUFACTURE AND INSTALLATION.
6. THE GROUT/BEDDING MORTAR SHALL BE HIGH STRENGTH FREE FLOWING NON SHRINK GROUT (80 MPa STRENGTH).
7. ALL BEARING SHALL BE PLACED IN TRULY HORIZONTAL PLANE ONLY.
8. FOR DESIGN OF POT BEARINGS, THE DESIGN HORIZONTAL FORCE SHALL, IN NO CASE BE LESS THAN 10% AND GREATER THAN 25% OF THE DESIGN VERTICAL LOAD.
9. THE CONTRACTOR AND SUPPLIER OF BEARINGS SHALL BE FURNISH A MINIMUM TROUBLE FREE WARRANTY OF 10 YEARS AFTER OPENING OF THE BRIDGE.
10. THIS DRAWING SHALL BE READ IN CONJUNCTION WITH:
    DIMENSIONAL DETAILS OF PRECAST RCC GIRDER & CAST–IN–SITU SLAB SUPERSTRUCTURE
    NIRTTP/NAG–MUG/DANGDUNGE/RCC–G/17m/01(SHEET 1&2)

GENERAL DATA:

1. STRUCTURE IS LOCATED IN SEISMIC ZONE : V
2. GRADE OF CONCRETE
   ABUTMENT CAP. M–30
   PEDESTAL M–40

TABLE SHOWING DATA FOR DESIGN OF BEARINGS

SL. No.	BEARING TYPE	LOAD CONDITION	LOADS, FORCES, MOVEMENTS AND ROTATION DATA										BEARING (Nos.) PER SPAN
			VERTICAL LOAD (kN)		HORIZONTAL FORCE (kN)				ROTATION (RAD)		MOVEMENT (mm)		
			CASE	MAGNITUDE	LONGITUDINAL		TRANSVERSE		CASE	MAGNITUDE	LONGITUDINAL	TRANSVERSE	
(1)	(2)	(3)	(4)	(5)	(6)	(7)	(8)	(9)	(10)	(11)	(12)	(13)	(14)
1.	FREE POT –CUM PTFE	NORMAL	MAXIMUM (WITH LIVE LOAD)	953	COEXISTING	95	COEXISTING	–	COEXISTING	0.002	–12.7/12.6	4.70	8
			MINIMUM (WITH LIVE LOAD)	378	COEXISTING	38	COEXISTING	–	COEXISTING	0.002	–12.7/12.6	4.70	
			MINIMUM (WITHOUT LIVE LOAD)	310	COEXISTING	31	COEXISTING	–	COEXISTING	0.002	–12.7/12.6	4.70	
		SEISMIC (LONGITUDINAL)	MAXIMUM (WITH LIVE LOAD)	599	COEXISTING	–	COEXISTING	–	COEXISTING	0.002	–12.7/12.6	4.70	
			MINIMUM (WITH LIVE LOAD)	359	COEXISTING	–	COEXISTING	–	COEXISTING	0.002	–12.7/12.6	4.70	
			MINIMUM (WITHOUT LIVE LOAD)	343	COEXISTING	–	COEXISTING	–	COEXISTING	0.002	–12.7/12.6	4.70	
		SEISMIC (TRANSVERSE)	MAXIMUM (WITH LIVE LOAD)	599	COEXISTING	–	COEXISTING	–	COEXISTING	0.002	–12.7/12.6	4.70	
			MINIMUM (WITH LIVE LOAD)	359	COEXISTING	–	COEXISTING	–	COEXISTING	0.002	–12.7/12.6	4.70	
			MINIMUM (WITHOUT LIVE LOAD)	343	COEXISTING	–	COEXISTING	–	COEXISTING	0.002	–12.7/12.6	4.70	
2.	PIN BEARING	NORMAL	MAXIMUM (WITH LIVE LOAD)	–	COEXISTING	212	COEXISTING	–	COEXISTING	0.002	–	–	1
			MINIMUM (WITH LIVE LOAD)	–	COEXISTING	172	COEXISTING	–	COEXISTING	0.002	–	–	
			MINIMUM (WITHOUT LIVE LOAD)	–	COEXISTING	172	COEXISTING	–	COEXISTING	0.002	–	–	
		SEISMIC (LONGITUDINAL)	MAXIMUM (WITH LIVE LOAD)	–	COEXISTING	1806	COEXISTING	280	COEXISTING	0.002	–	–	
			MINIMUM (WITH LIVE LOAD)	–	COEXISTING	1806	COEXISTING	265	COEXISTING	0.002	–	–	
			MINIMUM (WITHOUT LIVE LOAD)	–	COEXISTING	1770	COEXISTING	266	COEXISTING	0.002	–	–	
		SEISMIC (TRANSVERSE)	MAXIMUM (WITH LIVE LOAD)	–	COEXISTING	567	COEXISTING	932	COEXISTING	0.002	–	–	
			MINIMUM (WITH LIVE LOAD)	–	COEXISTING	567	COEXISTING	885	COEXISTING	0.002	–	–	
			MINIMUM (WITHOUT LIVE LOAD)	–	COEXISTING	567	COEXISTING	590	COEXISTING	0.002	–	–	
3.	METALLIC GUIDE BEARING	NORMAL	MAXIMUM (WITH LIVE LOAD)	–	COEXISTING	–	COEXISTING	–	COEXISTING	0.002	–12.7/12.6	–	1
			MINIMUM (WITH LIVE LOAD)	–	COEXISTING	–	COEXISTING	–	COEXISTING	0.002	–12.7/12.6	–	
			MINIMUM (WITHOUT LIVE LOAD)	–	COEXISTING	–	COEXISTING	–	COEXISTING	0.002	–12.7/12.6	–	
		SEISMIC (LONGITUDINAL)	MAXIMUM (WITH LIVE LOAD)	–	COEXISTING	–	COEXISTING	280	COEXISTING	0.002	–12.7/12.6	–	
			MINIMUM (WITH LIVE LOAD)	–	COEXISTING	–	COEXISTING	265	COEXISTING	0.002	–12.7/12.6	–	
			MINIMUM (WITHOUT LIVE LOAD)	–	COEXISTING	–	COEXISTING	266	COEXISTING	0.002	–12.7/12.6	–	
		SEISMIC (TRANSVERSE)	MAXIMUM (WITH LIVE LOAD)	–	COEXISTING	–	COEXISTING	932	COEXISTING	0.002	–12.7/12.6	–	
			MINIMUM (WITH LIVE LOAD)	–	COEXISTING	–	COEXISTING	885	COEXISTING	0.002	–12.7/12.6	–	
			MINIMUM (WITHOUT LIVE LOAD)	–	COEXISTING	–	COEXISTING	590	COEXISTING	0.002	–12.7/12.6	–	

EMPLOYER	PROJECT	DESIGN CONSULTANT					
Government of Nepal Ministry of Physical Infrastructure and Transport, Department of Roads, Foreign Co-operation Branch	Nepal India Regional Trade and Transport Project (NIRTTP) (IDA CREDIT No. 5273 - NEP) Feasibility Study of Kathmandu (Nagdhunga) -Detailed Design of Kathmandu (Nagdhunga) -Naubise - Mugling Road and BridgesNaubise - Mugling Road and Bridges	Intercontinental Consultants & Technocrats Pvt.Ltd, A-8, Green Park, New Delhi - 110016 Ph : 4086-3000, Fax 2685-5252 In Joint Venture With Soosung Engineering Co. Ltd., South Korea	In Association With Full Bright Consultancy (Pvt.) Ltd. 316,Baburam Acharya Sadak, Sinamangal, Kathmandu, GPO Box: 4970, Kathmandu, Nepal	Prepared By	K.M.JOHRI	DRAWING TITLE: DETAILS OF LOADS AND FORCES FOR POT/PTFE BEARINGS EFFECTIVE SPAN : 17.00m	Scale: As Shown
				Designed By	V.CHAUDHARY		Date: JUNE-2018
				Checked By	P.K.KHAN	Drawing No.: NIRTTP/NAG-MUG/DANGDUNGE/RCC-G/17m/05	
				Approved By	B.N.SINGH		

KHESTE KHOLA BRIDGE

CHAINAGE : 18+129

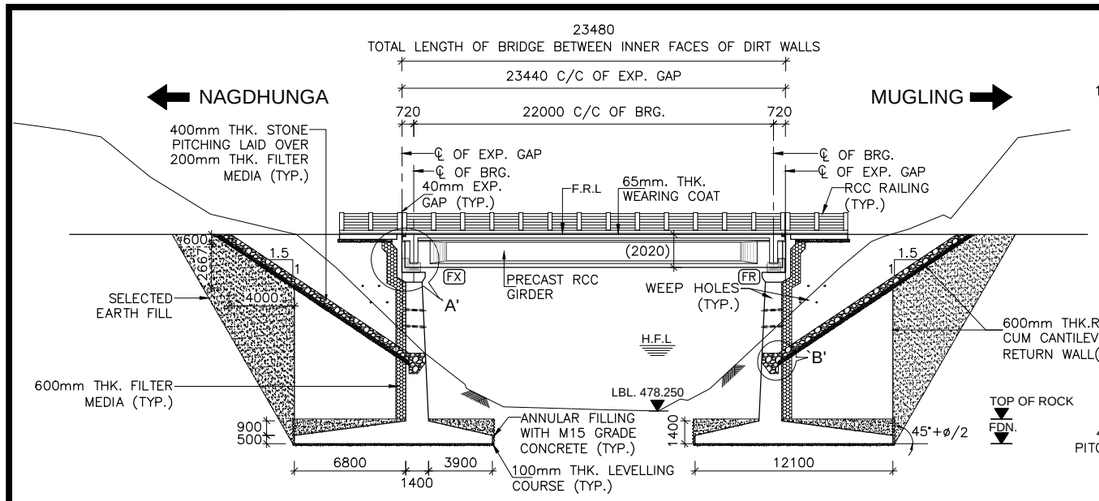

FINISHED ROAD LEVEL (m)	489.105	489.105	489.105
GROUND LEVEL (m)	482.438	478.250	483.232
FOUNDING LEVEL (m)	476.250		476.250
CHAINAGE (m)	(−)11.000	0.000	11.000

CHAINAGE AT 0.000m IS 18+129Km

LONGITUDINAL ELEVATION OF PROPOSED BRIDGE

(SCALE 1:250)

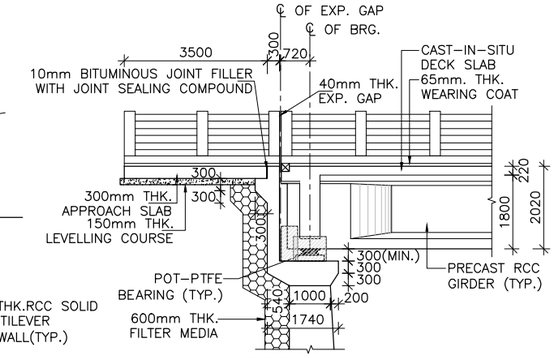

DETAIL-`A'

(SCALE 1:100)

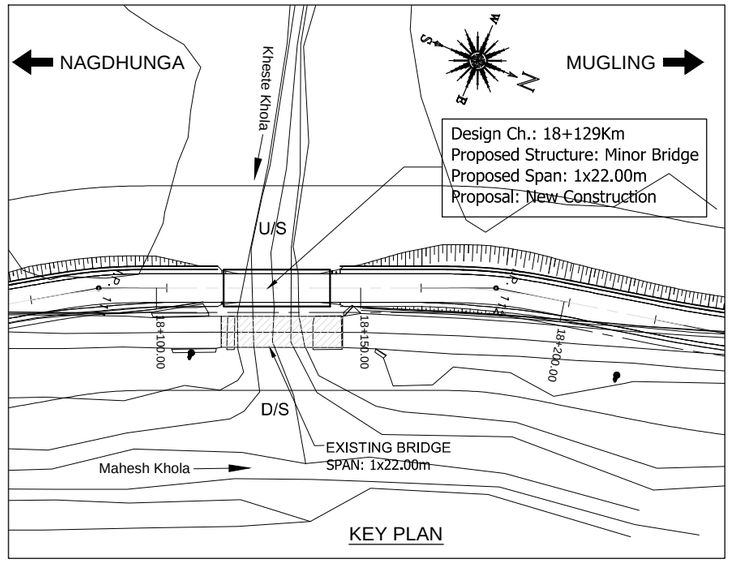

KEY PLAN

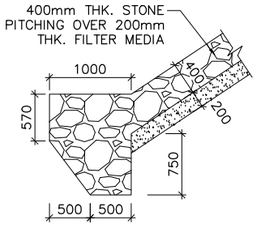

DETAIL-B

SCALE−1:50

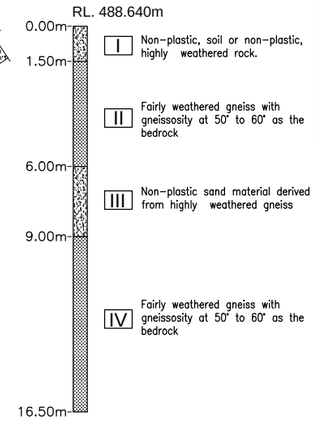

BH-01

(SCALE 1:175)

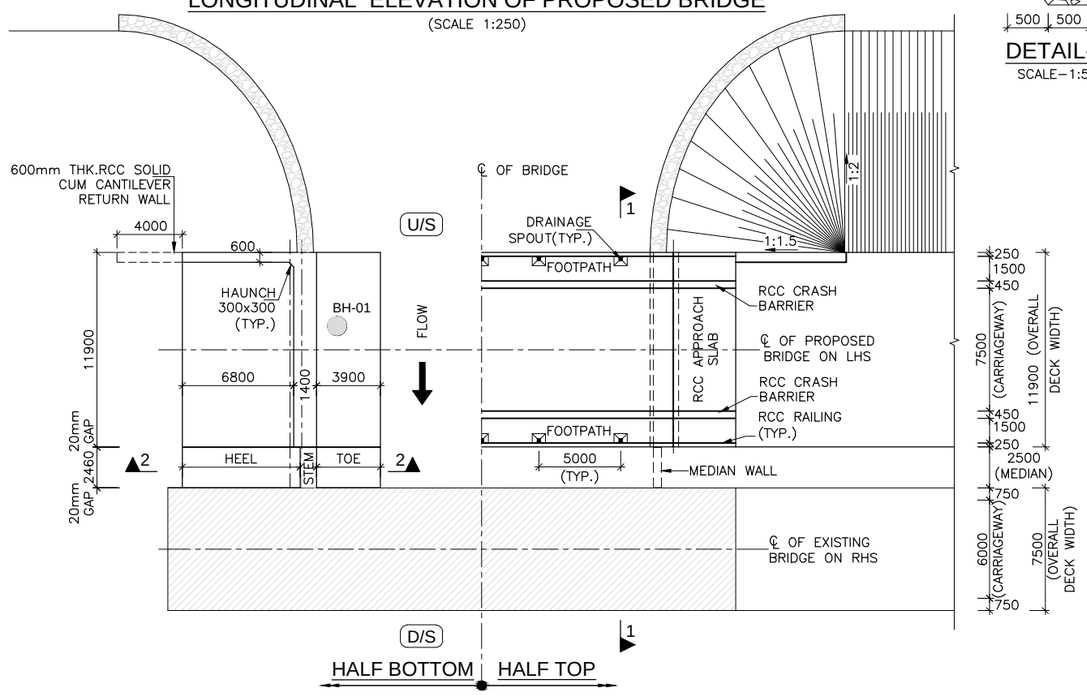

PLAN

(SCALE 1:250)

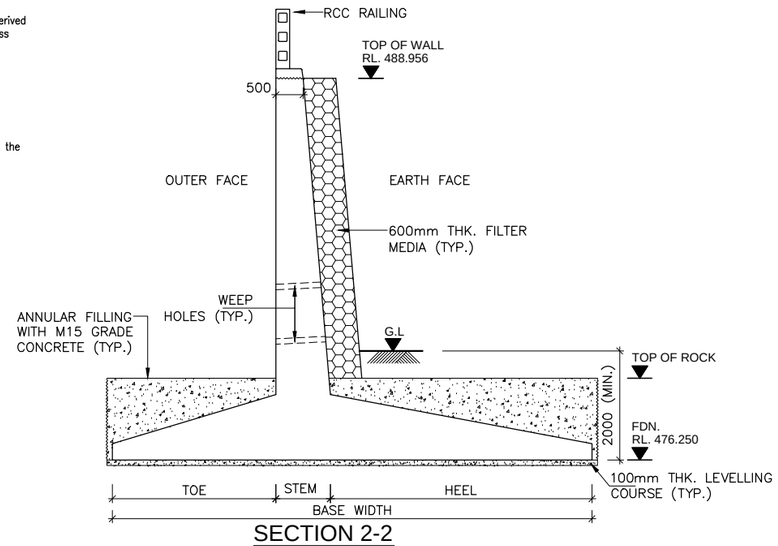

SECTION 2-2

(REFER SEPARATE DRAWING FOR DETAILS)

(SCALE 1:75)

LEGEND:

F.R.L	:	FINISHED ROAD LEVEL
H.F.L	:	HIGH FLOOD LEVEL
℄	:	CENTER LINE
LVL.	:	LEVEL
RL.	:	REDUCED LEVEL
TYP.	:	TYPICAL
THK.	:	THICK
D/S	:	DOWNSTREAM
U/S	:	UPSTREAM
G.L	:	GROUND LEVEL
L.B.L	:	LOWEST BED LEVEL
FDN.	:	FOUNDING LEVEL
FX	:	FIX
FR	:	FREE
EXISTING	:	
PROPOSED	:	
BH	:	BORE HOLE

HYDRAULIC DATA:-

DISCHARGE	− 165 cumec
VELOCITY	− 4.26m/s
H.F.L	− 482.240m
ROCK TOP LVL.	− 479.640m

EMPLOYER	PROJECT	DESIGN CONSULTANT
Government of Nepal Ministry of Physical Infrastructure and Transport, Department of Roads, Foreign Co-operation Branch	Nepal India Regional Trade and Transport Project (NIRTTP) (IDA CREDIT No. 5273 - NEP) Detailed Design of Kathmandu (Nagdhunga) - Naubise - Mugling Road and Bridges	Intercontinental Consultants & Technocrats Pvt.Ltd, A-8, Green Park, New Delhi - 110016 Ph : 4086-3000, Fax 2685-5252 In Joint Venture With Soosung Engineering Co. Ltd., South Korea In Association With Full Bright Consultancy (Pvt.) Ltd. 316,Baburam Acharya Sadak, Sinamangal, Kathmandu, GPO Box: 4970, Kathmandu, Nepal

Prepared By	Pardeep	PARDEEP
Designed By	Nishtha	NISHTHA S.
Checked By	P.Khan	P.K.KHAN
Approved By		B.N.SINGH

DRAWING TITLE: GENERAL ARRANGEMENT DRAWING FOR MINOR BRIDGE AT CH:- 18+129KM OVER KHESTE KHOLA (1x22.00m) PACKAGE-II (NAUBISE-GALCHI)

Drawing No.: NIRTTP/NAG-MUG/KHESTE/GAD

Scale: As Shown

Date: JUNE-2018

(SHEET 1 OF 2)

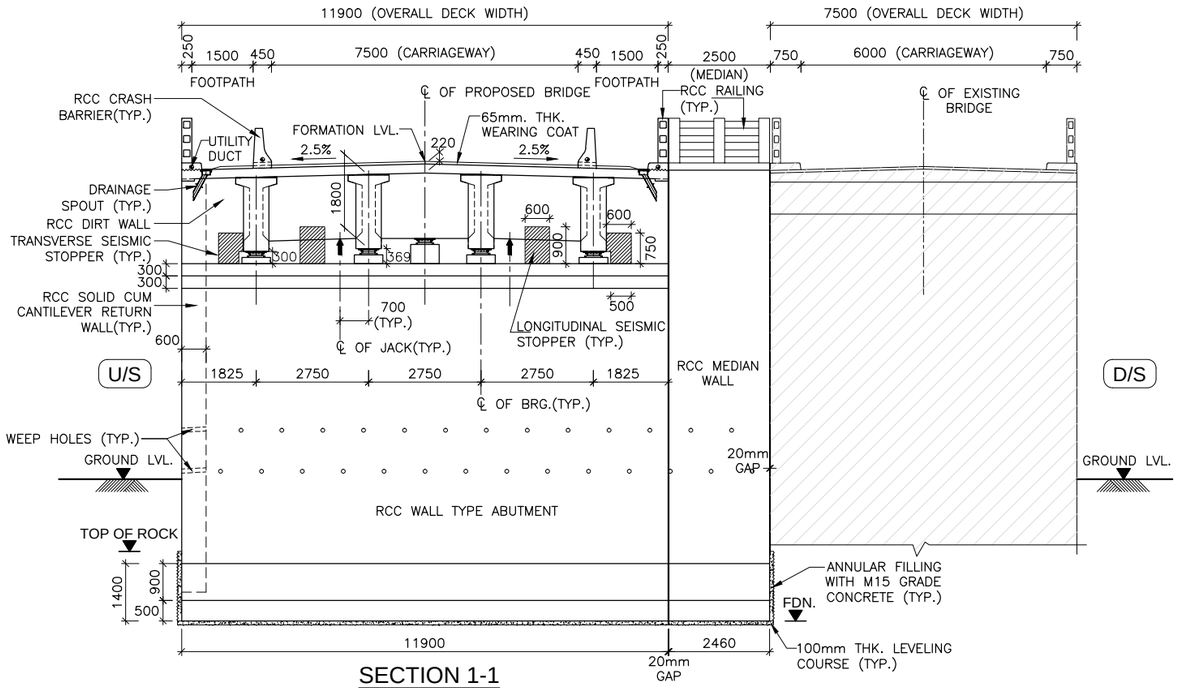

SECTION 1-1

(SCALE 1:100)

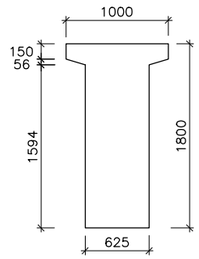

AT SUPPORT

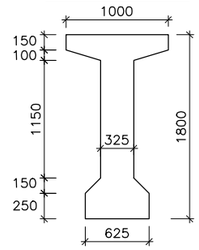

AT MID SPAN

CROSS SECTION OF PRECAST RCC GIRDER

(SCALE 1:40)

NOTES:-

1. ALL DIMENSIONS ARE IN MILLIMETER AND LEVELS ARE IN METER UNLESS OTHERWISE SPECIFIED.
2. DIMENSIONS ARE NOT TO BE SCALED ONLY WRITTEN DIMENSIONS SHALL BE FOLLOWED.
3. THE BRIDGE HAS BEEN DESIGNED FOR MOST SEVERE OF:
   (i) ONE LANE OF IRC CLASS 70R LOADING OR TWO LANES OF IRC CLASS A LOADING WHEN FOOTPATHS ARE IN POSITION.
   (ii) ONE LANE OF IRC CLASS 70R LOADING +ONE LANE OF IRC CLASS A LOADING OR 3 LANES OF IRC CLASS A LOADING WHEN FOOTPATHS ARE REMOVED.
   (iii) ONE LANE OF SV LOADING IN ACCORDANCE WITH CLAUSE 204.5 OF IRC–6:2017.
4. MINIMUM CONCRETE COVER, GRADE OF CONCRETE, MINIMUM CEMENT CONTENT & MAXIMUM W/C RATIO SHALL BE AS PER 'MODERATE' CONDITION OF EXPOSURE.
5. CONCRETE SHALL BE DESIGN MIX WITH A MINIMUM 28 DAYS CHARACTERISTIC STRENGTH ON 150mm CUBE AS FOLLOWS:
   a. LEVELING COURSE (UNDER FOUNDATION) – M10
   b. LEVELING COURSE (UNDER APPROACH SLAB) – M15
   c. FOUNDATION – M30
   d. PEDESTAL – M40
   e. SEISMIC STOPPER – M40
   f. SUBSTRUCTURE – M30
   g. SUPERSTRUCTURE – M35
   h. RETURN/RETAINING WALL – M30
   j. CRASH BARRIER – M40
   k. APPROACH SLAB – M30
6. UNTENSIONED REINFORCEMENT SHALL BE THERMO MECHANICALLY TREATED (TMT), HYSD BARS OF GRADE DESIGNATION Fe–500D CONFORMING TO IS: 1786.
7. POT/PTFE BEARINGS SHALL BE DESIGNED AS PER PROVISION OF IRC : 83 (PART–III 2002).
8. STRIP SEAL TYPE EXPANSION JOINTS SHALL BE PROVIDED AS PER PROVISION OF IRC: SP–69–2011.
9. 65MM THICK WEARING COURSE COMPRISING OF 40MM THICK ASPHALTIC CONCRETE OVERLAID WITH 25MM THICK MASTIC ASPHALT SHALL BE PROVIDED AS PER SECTION 500 OF MORT&H SPECIFICATION.
10. 100MM DIA WEEP HOLES AT 1000MM C/C STAGGERED HORIZONTALLY AND VERTICALLY SHALL BE PROVIDED IN ONE OR TWO LAYERS ABOVE G.L IN VERTICAL WALLS OF ABUTMENT, RETURN/RETAINING WALLS AT A SLOPE OF 1 VERTICAL TO 20 HORIZONTAL TOWARDS THE DRAINING FACE.
11. WATER TO BE USED IN CONCRETING AND CURING SHALL CONFORM TO CLAUSE 18.4.5 OF IRC:112–2011.
12. LAYING, COMPACTION AND EXTENT OF BACKFILL BEHIND ABUTMENTS AND RETURN/RETAINING WALLS SHALL CONSIST OF SELECTED EARTH CONFORMING TO APPENDIX:6 OF IRC:78–2014 HAVING PROPERTIES C=0, ϕ= 35°, δ=22.5° & γd = 20 KN/M³.
13. MINIMUM CLEAR COVER TO OUTER MOST REINFORCEMENT SHALL BE AS UNDER:–
    a. SUPERSTRUCTURE – 40MM
    b. SUBSTRUCTURE (EARTH FACE) – 75MM
    c. SUBSTRUCTURE (NON EARTH FACE) – 50MM
    d. FOUNDATION – 75MM
14. THE BRIDGE IS DESIGNED FOR PROVISION OF SEISMIC ZONE–V AS PER CLAUSE 219 OF IRC:6:2017.
15. SAFE BEARING CAPACITY CONSIDERED IN DESIGN AT PROPOSED FOUNDING LEVEL IS 40 T/M². THIS SHALL BE ASCERTAINED BEFORE EXECUTION AT SITE BY CONFIRMATORY GEOTECHNICAL INVESTIGATIONS.
16. FILTER MEDIA SHALL BE PROVIDED AS PER APPENDIX–6 OF IRC–78:2014.
17. MINIMUM ANCHORAGE OF FOUNDATION IN SOFT ROCK SHALL BE 1.5M AND 0.6M IN HARD ROCK. ANY DEVIATION IN ROCK LEVEL FROM DESIGN SHALL BE REPORTED TO ENGINEER FOR REQUIRED CHANGES IN DESIGN NO CHANGES REQUIRED FOR INCREASE HEIGHT UP TO 50 CM.
18. WHERE FOUNDATIONS ARE PLACED ON ROCK, TRENCHES AROUND THE FOOTING SHALL BE FILLED UP WITH CONCRETE OF M15 GRADE UP TO TOP OF ROCK.
19. THIS DRAWING SHOULD BE READ IN CONJUNCTION WITH RELEVANT HIGHWAY PLAN AND PROFILE DRAWINGS.
20. ALL CHAINAGES, FRL, GL SHALL BE CONFIRMED AT SITE PRIOR TO EXECUTION.
21. FOR APPROACH SLAB, DRAINAGE SPOUTS, CRASH BARRIER, PROTECTION WORK, RETAINING WALL AND MEDIAN WALL DETAILS REFER SEPARATE DRAWINGS.
22. WHEREVER THE COMPONENTS OF EXISTING BRIDGE INTERFERES WITH THE PROPOSED BRIDGE, THAT SHALL BE DISMANTLED UPTO FOUNDATION TOP.
23. MINIMUM LONGITUDINAL GRADIENT OF 0.3% SHALL BE PROVIDED IN PROPOSED BRIDGE TO FACILITATE DRAINAGE OF DECK AS PER CLAUSE 105.3.6 OF IRC–5.
24. SIZE OF EACH INDIVIDUAL STONE PITCHING AND LAUNCHING APRON SHALL NOT BE LESS THAN 30CM IN DIAMETER AND 40KG IN WEIGHT OR AS PER TABLE 5.1 & 5.2 OF IRC:89–1997. WHERE THE REQUIRED SIZE STONES ARE NOT ECONOMICALLY AVAILABLE, STONES IN WIRE CRATES MAY BE USED IN PLACE OF ISOLATED STONES OF EQUIVALENT WEIGHT.

REFERENCE DRAWINGS:-

1. DIMENSIONAL DETAILS OF ABUTMENT AND FOUNDATION:
   –NIRTTP/NAG–MUG/KHESTE/SUB–01
2. REINFORCEMENT DETAILS OF ABUTMENT, DIRT WALL, RETURN WALL, PEDESTAL AND SEISMIC STOPPER:
   –NIRTTP/NAG–MUG/KHESTE/SUB–02(SHEET1&2)
3. DIMENSIONAL DETAILS OF PRECAST RCC GIRDER & CAST–IN–SITU SLAB SUPERSTRUCTURE:
   –NIRTTP/NAG–MUG/KHESTE/RCC–G/22m/01
4. REINFORCEMENT DETAILS OF LONGITUDINAL GIRDER:
   –NIRTTP/NAG–MUG/KHESTE/RCC–G/22m/02
5. REINFORCEMENT DETAILS OF END CROSS GIRDER:
   –NIRTTP/NAG–MUG/KHESTE/RCC–G/22m/03
6. REINFORCEMENT DETAILS OF RCC DECK SLAB:
   –NIRTTP/NAG–MUG/KHESTE/RCC–G/22m/04(SHEET 1&2)
7. DETAILS OF LOAD AND FORCES FOR POT/PTFE BEARINGS:
   –NIRTTP/NAG–MUG/KHESTE/RCC–G/22m/05

MISCELLANEOUS DRAWINGS:

1. DETAILS OF APPROACH SLAB:
   –NIRTTP/NAG–MUG/PACKAGE–II/MISC.–01
2. DETAILS OF DRAINAGE SPOUT & WEARING COAT:
   –NIRTTP/NAG–MUG/PACKAGE–II/MISC.–02
3. DIMENSIONAL & REINF. DETAILS OF R.C.C CRASH BARRIER:
   –NIRTTP/NAG–MUG/PACKAGE–II/MISC.–03
4. DIMENSIONAL & REINF. DETAILS OF R.C.C RAILING:
   –NIRTTP/NAG–MUG/PACKAGE–II/MISC.–04
5. DIMENSIONAL AND REINFORCEMENT DETAILS OF RCC RETAINING WALL/MEDIAN WALL:
   –NIRTTP/NAG–MUG/PACKAGE–II/MISC.–06

LEGEND:

F.R.L	:	FINISHED ROAD LEVEL
H.F.L	:	HIGH FLOOD LEVEL
℄	:	CENTER LINE
LVL.	:	LEVEL
RL.	:	REDUCED LEVEL
TYP.	:	TYPICAL
THK.	:	THICK
D/S	:	DOWNSTREAM
U/S	:	UPSTREAM
G.L	:	GROUND LEVEL
L.B.L	:	LOWEST BED LEVEL
FDN.	:	FOUNDING LEVEL
FX	:	FIX
FR	:	FREE
EXISTING	:	
PROPOSED	:	
BH	:	BORE HOLE

FACE OF OLD ABUTMENT SHALL BE MATCHED WITH PROPOSED BRIDGE ABUTMENT. IN CASE OF BIGGER SPAN IN PROPOSED SPAN, MEDIAN WALL SHALL BE PROVIDED IN FLARED SHAPE TO ALLOW SMOOTH PASSAGE OF RIVER WATER.

ABUTMENT CAP SHALL BE CAST ONLY AFTER COMPLETING THE BACK FILLING WORK UP TO ABUTMENT SHAFT TOP LEVEL.

EMPLOYER	PROJECT	DESIGN CONSULTANT				
Government of Nepal Ministry of Physical Infrastructure and Transport, Department of Roads, Foreign Co-operation Branch	Nepal India Regional Trade and Transport Project (NIRTTP) (IDA CREDIT No. 5273 - NEP) Detailed Design of Kathmandu (Nagdhunga) - Naubise - Mugling Road and Bridges	Intercontinental Consultants & Technocrats Pvt.Ltd, A-8, Green Park, New Delhi - 110016 Ph : 4086-3000, Fax 2685-5252 In Joint Venture With Soosung Engineering Co. Ltd., South Korea	In Association With Full Bright Consultancy (Pvt.) Ltd. 316,Baburam Acharya Sadak, Sinamangal, Kathmandu, GPO Box: 4970, Kathmandu, Nepal	Prepared By	PARDEEP	DRAWING TITLE: GENERAL ARRANGEMENT DRAWING FOR MINOR BRIDGE AT CH:- 18+129KM OVER KHESTE KHOLA (1x22.00m) PACKAGE-II (NAUBISE-GALCHI)
				Designed By	NISHTHA S.	
				Checked By	P.K.KHAN	Drawing No.: NIRTTP/NAG-MUG/KHESTE/GAD
				Approved By	B.N.SINGH	

Scale: As Shown

Date: JUNE-2018

(SHEET 2 OF 2)

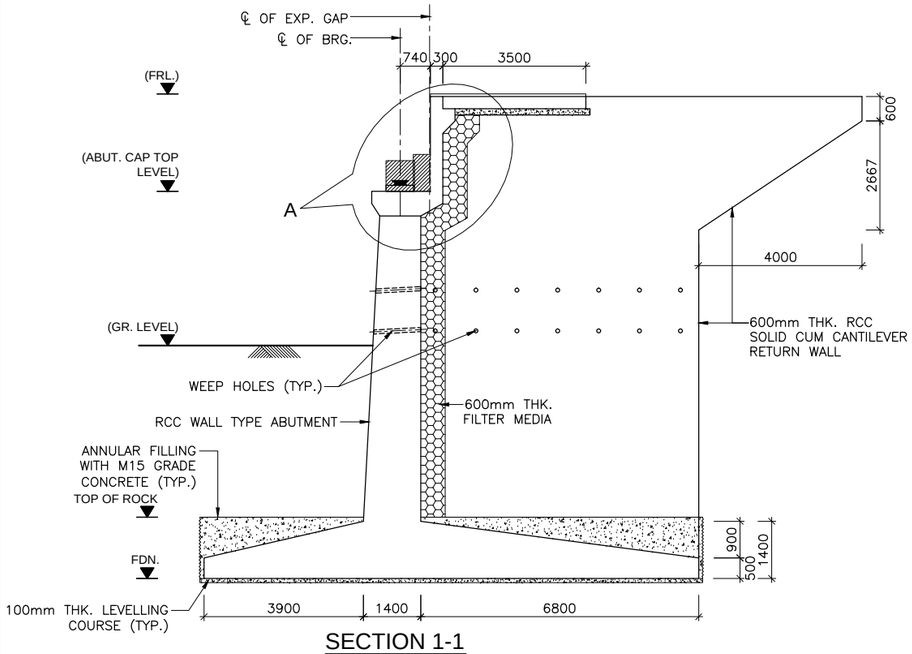

SECTION 1-1

(SCALE 1:100)

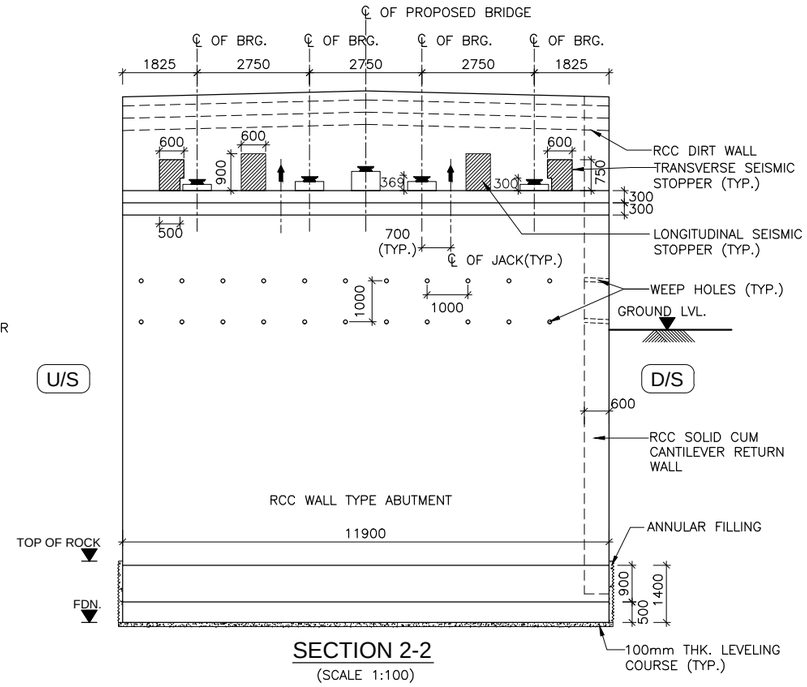

SECTION 2-2

(SCALE 1:100)

NOTES :–

1. ALL DIMENSIONS ARE IN MILLIMETERS UNLESS OTHERWISE MENTIONED.
2. ONLY WRITTEN DIMENSIONS ARE TO BE FOLLOWED AND NO DIMENSION SHALL BE SCALED.
3. CONCRETE SHALL BE DESIGN MIX WITH A MINIMUM 28 DAYS CHARACTERISTIC STRENGTH ON 150MM CUBE AS FOLLOWS:
   a. LEVELING COURSE (UNDER FOUNDATION) – 10MPa
   b. LEVELING COURSE (UNDER APPROACH SLAB) – 15MPa
   c. FOUNDATION – 30MPa
   d. SUBSTRUCTURE – 30MPa
   e. APPROACH SLAB – 30MPa
   f. PEDESTAL – 40MPa
   g. SEISMIC STOPPER – 30MPa
4. UNTENSIONED REINFORCEMENT SHALL BE THERMO MECHANICALLY TREATED (TMT), HYSD BARS OF GRADE DESIGNATION Fe–500D CONFORMING TO IS: 1786.
5. MINIMUM CLEAR COVER TO OUTER MOST REINFORCEMENT SHALL BE AS UNDER
   a. SUBSTRUCTURE (EARTH FACE) – 75MM
   b. SUBSTRUCTURE (NON EARTH FACE) – 50MM
   c. FOUNDATION – 75MM
6. LL REPRESENTS LONGITUDINAL AXIS OF BRIDGE AND TT REPRESENTS TRANSVERSE AXIS OF ABUTMENT/FOUNDATION.
7. SAFE BEARING CAPACITY AT THE PROPOSED FOUNDING LEVEL HAS BEEN CONSIDERED AS 40 T/M² ON THE BASIS OF SUB SURFACE EXPLORATION RESULTS. THIS SHALL GOT CONFIRMED BEFORE EXECUTION.
8. THE LOCATION OF JACKS FOR LIFTING UP THE SUPERSTRUCTURE SHALL BE DISTINCTLY ETCHED ON SOFFIT OF SUPERSTRUCTURE AND ON TOP OF ABUTMENT CAP.
9. THIS DRAWING SHALL BE READ IN CONJUNCTION WITH THE FOLLOWING DRGS.
   - GENERAL ARRANGEMENT DRAWING REFER:
     –NIRTTP/NAG–MUG/KHESTE/GAD
   - REINFORCEMENT DETAILS OF ABUTMENT, DIRT WALL, RETURN WALL, PEDESTAL AND SEISMIC STOPPER REFER:
     –NIRTTP/NAG–MUG/KHESTE/SUB–02(SHEET1&2)

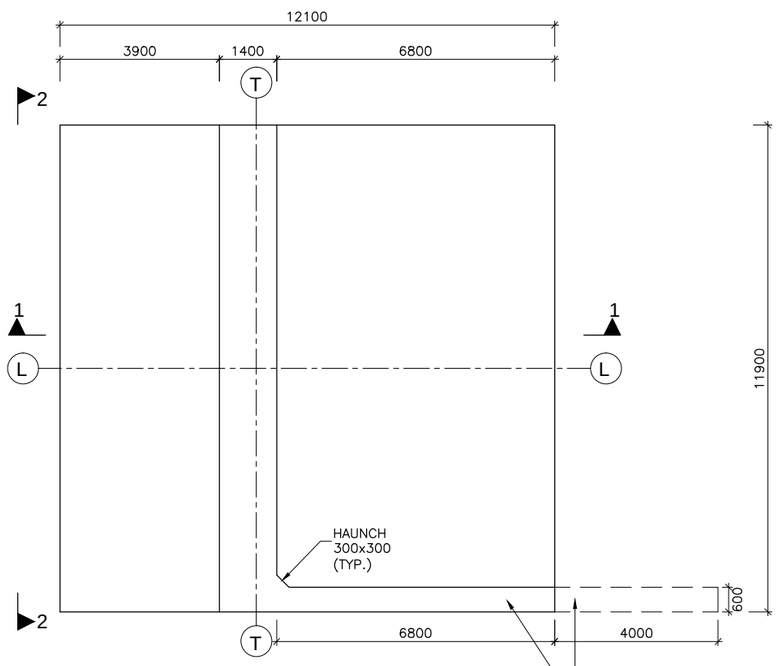

PLAN AT FOUNDATION LEVEL

(SCALE 1:100)

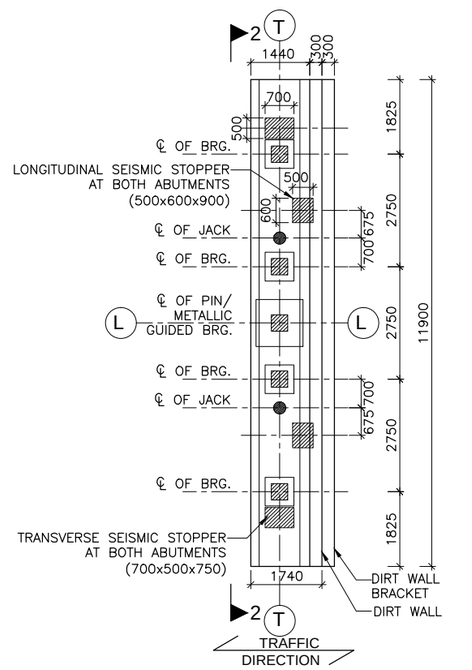

PLAN AT ABUTMENT CAP LEVEL

(SCALE 1:100)

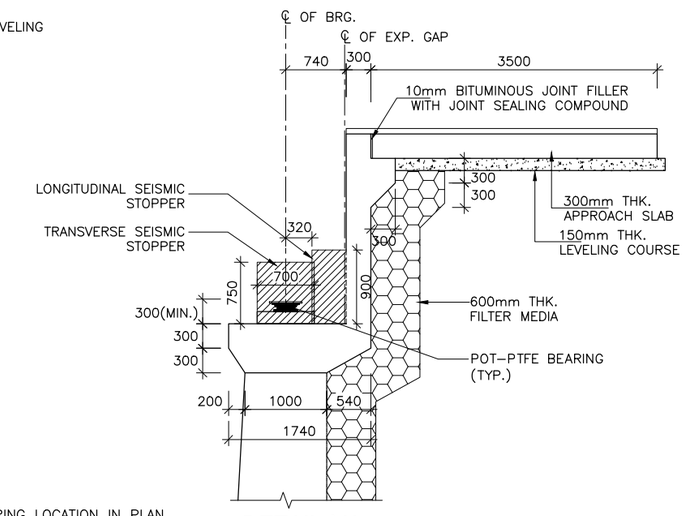

DETAIL-`A'

(SCALE 1:50)

LEGEND:-

- – BEARING LOCATION IN PLAN
- – JACK LOCATION IN PLAN
- – JACK LOCATION IN ELEVATION

LEVEL SCHEDULE

MARK	FRL (m)	ABUTMENT CAP TOP LVL. (m)	GR. LEVEL (m)	FDN. LEVEL (m)
ABUTMENT A1	489.105	486.604	482.438	476.250
ABUTMENT A2	489.105	486.604	483.232	476.250

EMPLOYER	PROJECT	DESIGN CONSULTANT
Government of Nepal Ministry of Physical Infrastructure and Transport, Department of Roads, Foreign Co-operation Branch	Nepal India Regional Trade and Transport Project (NIRTTP) (IDA CREDIT No. 5273 - NEP) Detailed Design of Kathmandu (Nagdhunga) - Naubise - Mugling Road and Bridges	Intercontinental Consultants & Technocrats Pvt.Ltd, A-8, Green Park, New Delhi - 110016 Ph : 4086-3000, Fax 2685-5252 In Joint Venture With Soosung Engineering Co. Ltd., South Korea In Association With Full Bright Consultancy (Pvt.) Ltd. 316,Baburam Acharya Sadak, Sinamangal, Kathmandu, GPO Box: 4970, Kathmandu, Nepal

			DRAWING TITLE:	Scale:	Date: JUNE-2018
Prepared By	Pardeep	PARDEEP	DIMENSIONAL DETAILS OF ABUTMENT AND FOUNDATION OF MINOR BRIDGE AT CH:- 18+129KM OVER KHESTE KHOLA PACKAGE-II (NAUBISE-GALCHI)	As Shown	
Designed By		NISHTHA S.			
Checked By		P.K.KHAN	Drawing No.:		
Approved By		B.N.SINGH	NIRTTP/NAG-MUG/KHESTE/ SUB-01		

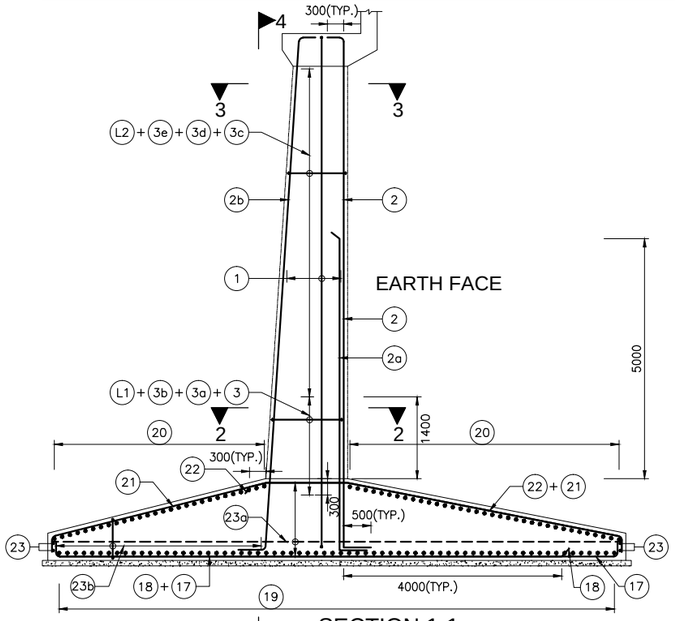

SECTION 1-1
(SCALE 1:75)

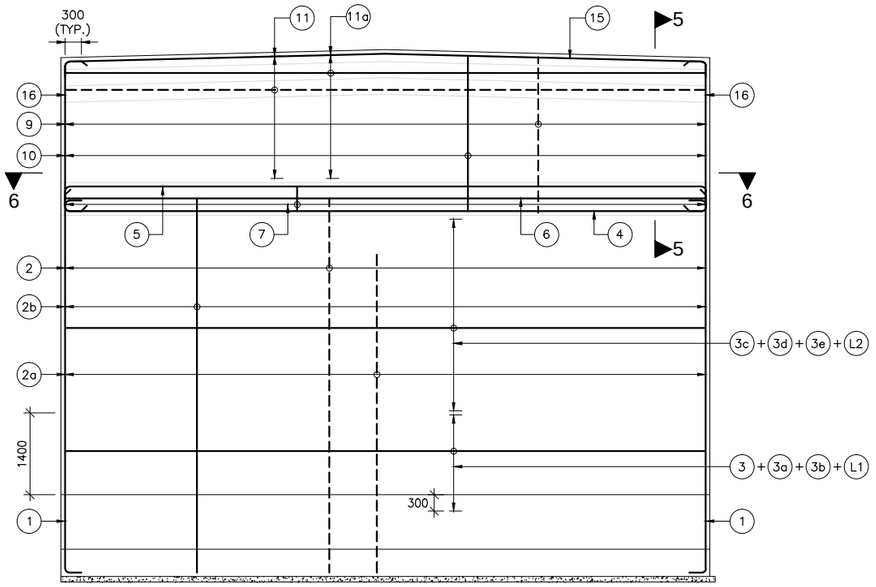

SECTION 4-4
(SCALE 1:75)
(FOUNDATION REINFORCEMENT & CORBEL REINFORCEMENT NOT SHOWN FOR CLARITY)

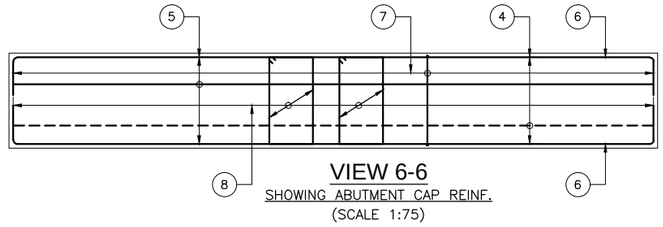

VIEW 6-6
SHOWING ABUTMENT CAP REINF.
(SCALE 1:75)

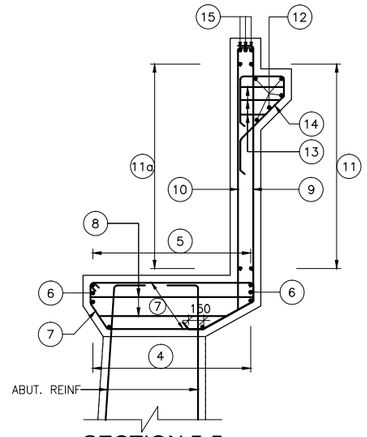

SECTION 5-5
(SCALE 1:40)

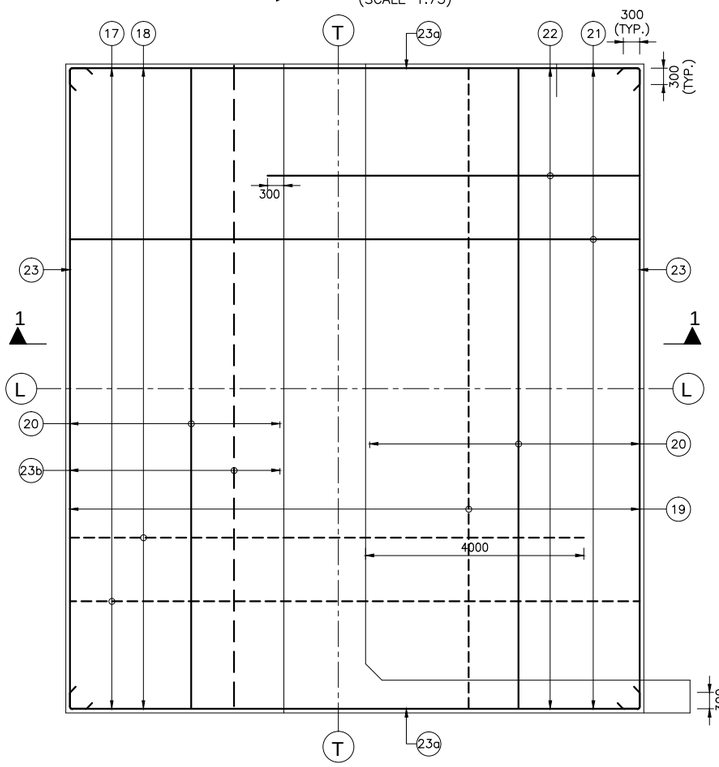

FOUNDATION PLAN
(SCALE 1:75)

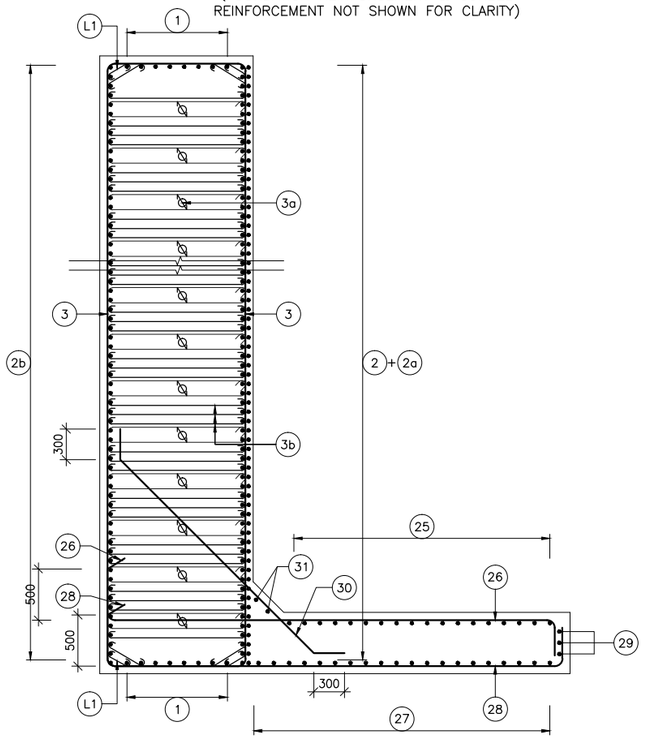

SECTION 2-2
(SCALE 1:40)

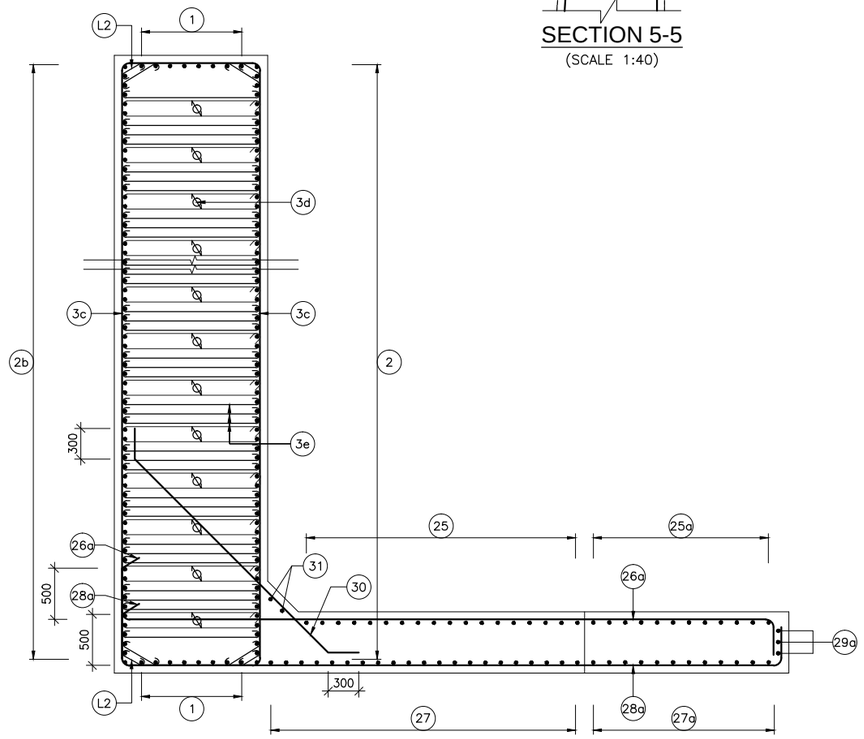

SECTION 3-3
(SCALE 1:40)

EMPLOYER	PROJECT	DESIGN CONSULTANT					
Government of Nepal Ministry of Physical Infrastructure and Transport, Department of Roads, Foreign Co-operation Branch	Nepal India Regional Trade and Transport Project (NIRTTP) (IDA CREDIT No. 5273 - NEP) Detailed Design of Kathmandu (Nagdhunga) - Naubise - Mugling Road and Bridges	Intercontinental Consultants & Technocrats Pvt.Ltd, A-8, Green Park, New Delhi - 110016 Ph : 4086-3000, Fax 2685-5252 In Joint Venture With Soosung Engineering Co. Ltd., South Korea	In Association With Full Bright Consultancy (Pvt.) Ltd. 316,Baburam Acharya Sadak, Sinamangal, Kathmandu, GPO Box: 4970, Kathmandu, Nepal	Prepared By	Pardeep	PARDEEP	DRAWING TITLE: REINFORCEMENT DETAILS OF ABUTMENT, DIRT WALL, RETURN WALL, PEDESTAL AND SEISMIC STOPPER FOR MINOR BRIDGE AT CH:- 18+129KM OVER KHESTE KHOLA PACKAGE-II (NAUBISE-GALCHI)	Scale:	Date: JUNE-2018
				Designed By	Nishtha	NISHTHA S.		As Shown	
				Checked By	P.Khan	P.K.KHAN	Drawing No.: NIRTTP/NAG-MUG/KHESTE/ SUB-02		(SHEET 1 OF 2)
				Approved By		B.N.SINGH			

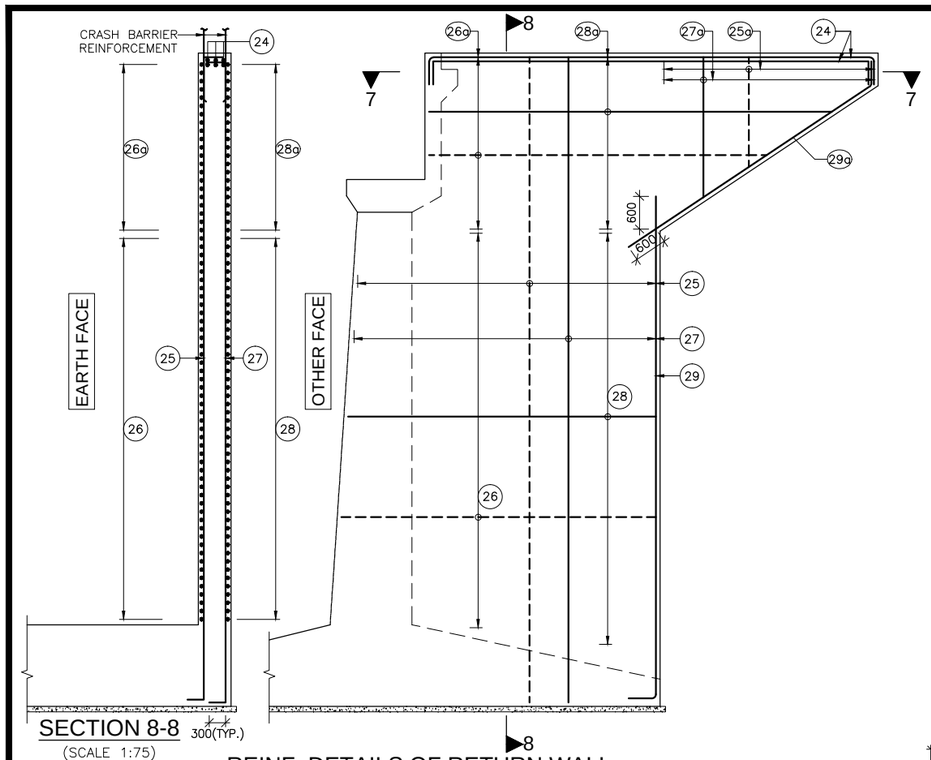

SECTION 8-8
(SCALE 1:75)

REINF. DETAILS OF RETURN WALL
(SCALE 1:75)

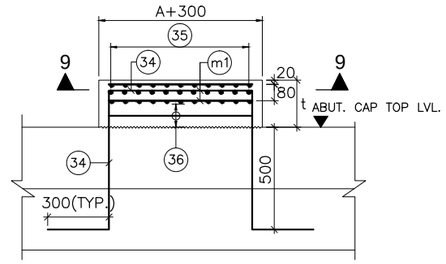

REINF. DETAILS OF PEDESTAL
(SCALE 1:20)
WHERE, A SIZE OF BEARING AND t IS HEIGHT OF PEDESTAL

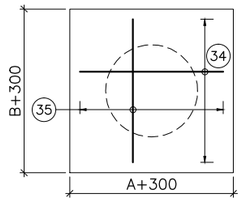

SECTION 9-9
(SCALE 1:20)
WHERE, A&B SIZE OF BEARING

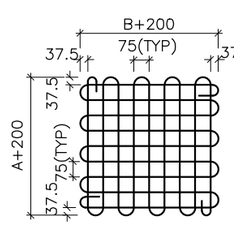

DETAIL OF MESH
TYPE "M1" 8 ϕ
(IN PEDESTAL) (IN TWO LAYERS)
(SCALE 1:20)
(WHERE A & B SIZE OF BEARING)

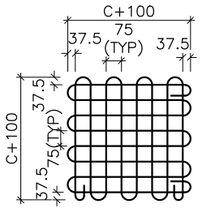

DETAIL OF MESH
TYPE "M2" 8 ϕ
(UNDER JACK LOCATION)
(IN TWO LAYERS)
(SCALE 1:20)
(WHERE C= DIA OF JACK)

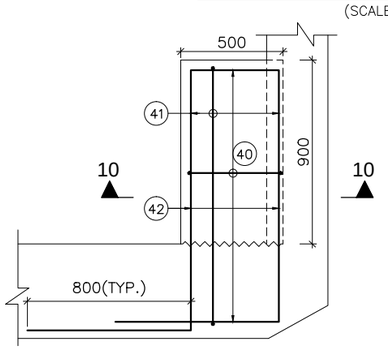

REINF. DETAILS OF LONGITUDINAL SEISMICSTOPPER
(SCALE 1:20)

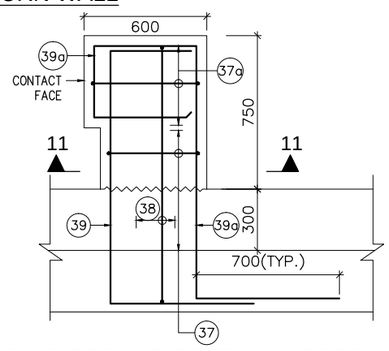

REINF. DETAILS OF TRANSVERSE SEISMIC STOPPER
(SCALE 1:20)

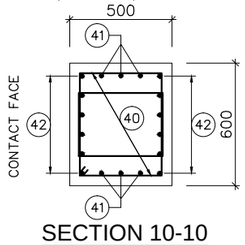

SECTION 10-10
(SCALE 1:20)
WHERE, A/B SIZE OF BEARING

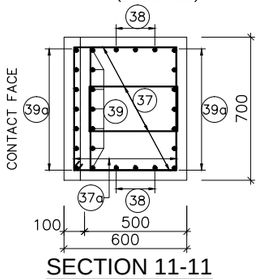

SECTION 11-11
(SCALE 1:20)

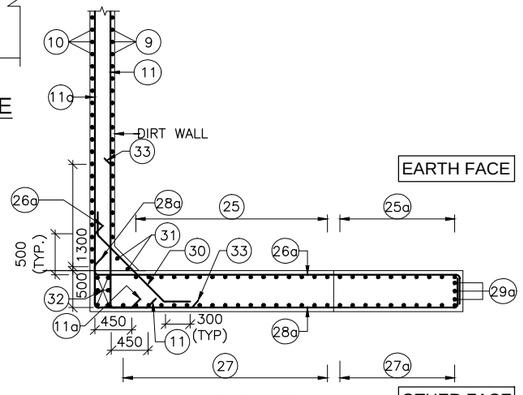

SECTION 7-7
JUNCTION DETAILS OF R.C.C. RETURN WALL & DIRT WALL
(SCALE 1:50)

10	10ϕ @ 100 c/c	150 150		DIRT WALL AND BRACKET
11	10ϕ @ 100 c/c	150 150		
11a	10ϕ @ 100 c/c	150 450		
12	12ϕ –5 NOS.			
13	2L–12ϕ@ 100c/c	400 200	(3 LAYERS)	
14	12ϕ @ 100 c/c	400 300		
15	20ϕ –3 NOS.		(2 LAYERS)	
16	12ϕ –3 NOS.	300 300		
17	32ϕ @ 170 c/c	100 100		FOUNDATION
18	32ϕ @ 170 c/c	100		
19	20ϕ @ 150 c/c	LV. LV.		
20	20ϕ @ 150 c/c	LV. LV.		
21	25ϕ @ 180 c/c	100 100		
22	16ϕ @ 180 c/c	100		
23	12ϕ –2 Nos	300 300		
23a	12ϕ @ 200 c/c	300 300		
23b	22L–10ϕ@ 150c/c	360 400 360	STIRRUPS	
24	25ϕ –3 Nos.	500 500	IN 2 LAYERS	RETURN WALL
25	20ϕ @150c/c	300 300		
25a	16ϕ @150c/c	300 300		
26	16ϕ @ 100c/c	300 800		
26a	16ϕ @ 100c/c	300 800		
27	12ϕ @150c/c	300 300		
27a	10ϕ @150c/c	300 300		
28	10ϕ @ 100c/c	300 500		
28a	10ϕ @ 100c/c	300 500		
29	12ϕ –3 Nos.	300		
29a	12ϕ –3 Nos.			
30	12ϕ @ 200c/c			
31	12ϕ –2 Nos.			
32	16ϕ –6 Nos.			
33	32ϕ @ 100c/c	1000 1000		
34	12ϕ @ 75c/c			RCC PEDESTAL
35	12ϕ @ 75c/c			
36	2L–12ϕ@ 150c/c		STRPS.	
37	4L–12ϕ@ 125c/c		STRPS.	TRANSVERSE SEISMIC STOPPER
37a	2L–12ϕ@ 125c/c		STRPS.	
38	16ϕ –3 Nos.		BOTH FACES	
39	32ϕ –7 Nos.		BOTH FACES	
39a	25ϕ –7 Nos.		BOTH FACES	
40	4L–12ϕ@ 100c/c		STRPS.	LONGITUDINAL SEISMIC STOPPER
41	16ϕ –3 Nos.		BOTH FACES	
42	32ϕ –6 Nos.		BOTH FACES	

NOTES :-

1. ALL DIMENSIONS ARE IN MILLIMETERS UNLESS OTHERWISE MENTIONED.
2. ONLY WRITTEN DIMENSIONS ARE TO BE FOLLOWED AND NO DIMENSION SHALL BE SCALED.
3. CONCRETE SHALL BE DESIGN MIX WITH A MINIMUM 28 DAYS CHARACTERISTIC STRENGTH ON 150MM CUBE AS FOLLOWS:
   a. LEVELING COURSE (UNDER FOUNDATION) – 10MPa
   b. LEVELING COURSE (UNDER APPROACH SLAB) – 15MPa
   c. FOUNDATION – 30MPa
   d. SUBSTRUCTURE – 30MPa
   e. APPROACH SLAB – 30MPa
   f. PEDESTAL – 40MPa
   g. SEISMIC STOPPER – 30MPa
4. UNTENSIONED REINFORCEMENT SHALL BE THERMO MECHANICALLY TREATED (TMT), HYSD BARS OF GRADE DESIGNATION Fe–500D CONFORMING TO IS: 1786.
5. MINIMUM CLEAR COVER TO OUTER MOST REINFORCEMENT SHALL BE AS UNDER:–
   a. SUBSTRUCTURE (EARTH FACE) – 75MM
   b. SUBSTRUCTURE (NON EARTH FACE) – 50MM
   c. FOUNDATION – 75MM
6. LL REPRESENTS LONGITUDINAL AXIS OF BRIDGE AND TT REPRESENTS TRANSVERSE AXIS OF ABUTMENT/FOUNDATION.
7. MINIMUM ANCHORAGE LENGTH OF REINFORCEMENT FOR FAVOURABLE CONDITION SHALL BE AS UNDER:
   CONCRETE GRADE – M–30 – 40 x DIA OF BAR
   CONCRETE GRADE – M–40 – 34 x DIA OF BAR
   (WHERE DIA OF BAR < = 32MM.)
   FOR UNFAVOURABLE CONDITION THESE VALUES SHALL BE MULTIPLIED BY 1.43.
8. MINIMUM LAP LENGTH OF REINFORCEMENT FOR FAVOURABLE CONDITION SHALL BE AS UNDER:
   CONCRETE GRADE – M–30 – 56 x DIA OF BAR
   CONCRETE GRADE – M–40 – 48 x DIA OF BAR
9. THIS DRAWING SHALL BE READ IN CONJUNCTION WITH THE FOLLOWING DRGS.
   - GENERAL ARRANGEMENT DRAWING REFER DRG. NO. : NIRTTP/NAG–MUG/KHESTE/GAD
   - DIMENSIONAL DETAILS OF ABUTMENT AND FOUNDATION REFER DRG. NO. : NIRTTP/NAG–MUG/KHESTE/SUB–01

BAR SHAPE SCHEDULE

BAR MRKD.	DESCRIPTION	BAR SHAPE	REMARKS	
1	16ϕ –8 NOS.	300 300	EACH FACE	ABUTMENT SHAFT
2	25ϕ –100 NOS.	300 300	1st LAYER	
2a	32 –100 NOS.	300 300	2nd LAYER	
2b	20ϕ –100 NOS.	300 300		
3	16ϕ @ 100c/c			
3a	36L–8ϕ @ 100c/c			
3b	51LINK8 ϕ@100 c/c			
3c	16ϕ @ 200c/c			
3d	36L–8ϕ @ 200c/c			
3e	51LINK8 ϕ@200 c/c			
L1	8LINK8 ϕ @100 c/c			
L2	8LINK8 ϕ @200 c/c			
4	12ϕ –10 NOS.	300 300		ABUTMENT CAP
5	12ϕ –10 NOS.	500 500		
6	12ϕ –1 NO.	300 300	EACH FACE	
7	2L–12ϕ@ 150c/c		STIRRUPS	
8	2L–12ϕ @ 200c/c	300	IN 2 LAYERS	
9	16ϕ @ 100 c/c	150		

LEGEND

- - - - - - - EARTH FACE/BOTTOM FACE
——————— NON EARTH FACE/TOP FACE

EMPLOYER	PROJECT	DESIGN CONSULTANT
Government of Nepal Ministry of Physical Infrastructure and Transport, Department of Roads, Foreign Co-operation Branch	Nepal India Regional Trade and Transport Project (NIRTTP) (IDA CREDIT No. 5273 - NEP) Detailed Design of Kathmandu (Nagdhunga) - Naubise - Mugling Road and Bridges	Intercontinental Consultants & Technocrats Pvt.Ltd, A-8, Green Park, New Delhi - 110016 Ph : 4086-3000, Fax 2685-5252 In Joint Venture With Soosung Engineering Co. Ltd., South Korea In Association With Full Bright Consultancy (Pvt.) Ltd. 316,Baburam Acharya Sadak, Sinamangal, Kathmandu, GPO Box: 4970, Kathmandu, Nepal

Prepared By	Pardeep	PARDEEP
Designed By	Nishtha	NISHTHA S.
Checked By	P.Khan	P.K.KHAN
Approved By		B.N.SINGH

DRAWING TITLE: REINFORCEMENT DETAILS OF ABUTMENT, DIRT WALL, RETURN WALL, PEDESTAL AND SEISMIC STOPPER FOR MINOR BRIDGE AT CH:- 18+129KM OVER KHESTE KHOLA
PACKAGE-II (NAUBISE-GALCHI)

Drawing No.: NIRTTP/NAG-MUG/KHESTE/ SUB-02

Scale: As Shown

Date: JUNE-2018

(SHEET 2 OF 2)

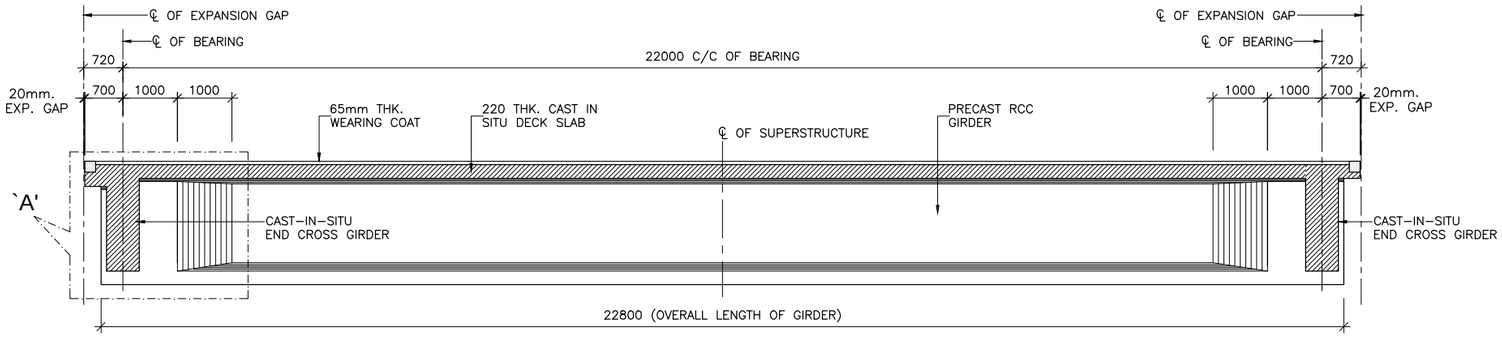

SECTIONAL ELEVATION 1 - 1

(SCALE 1:75)

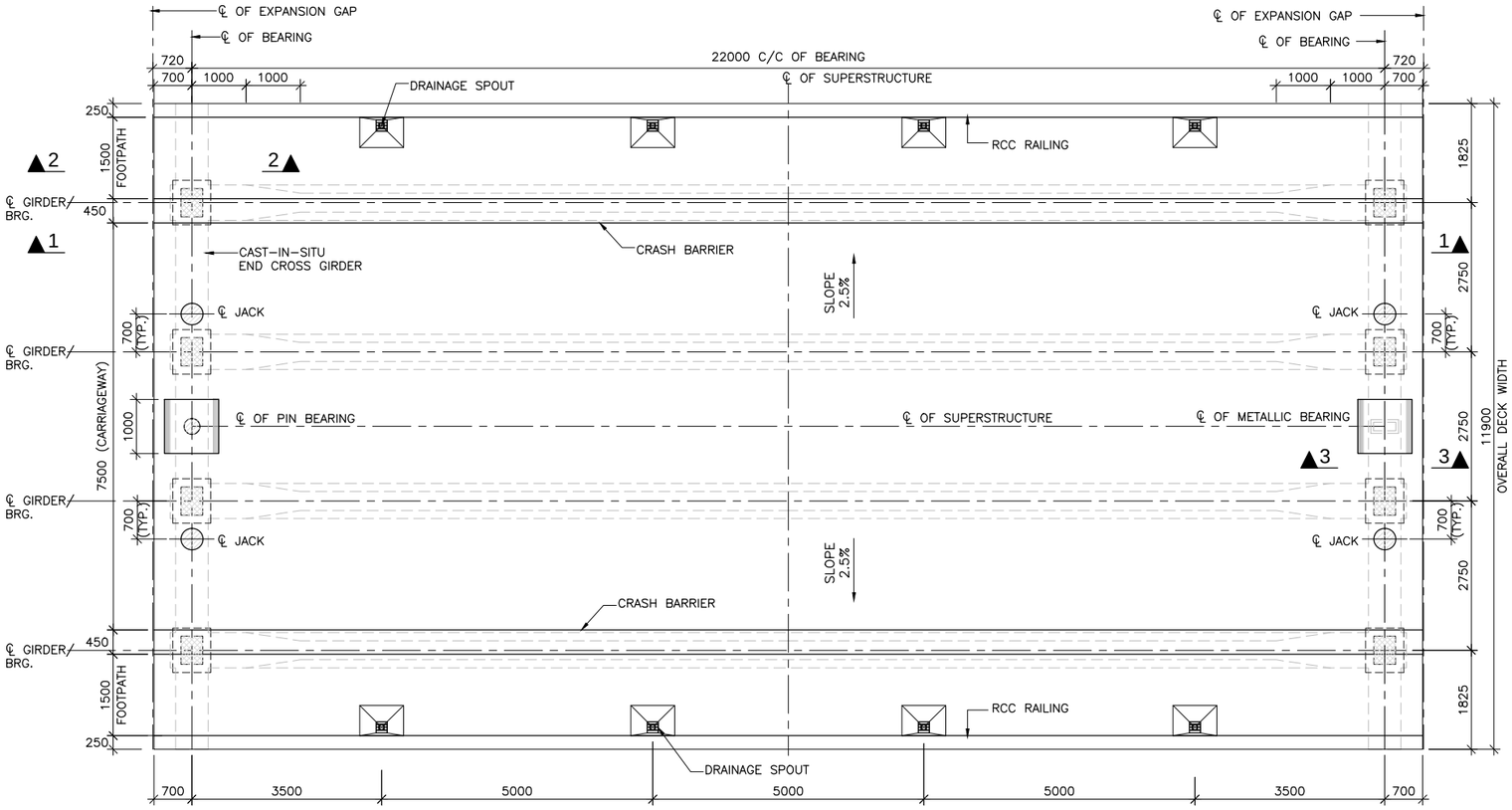

TOP PLAN OF DECK SLAB

(SCALE 1:75)

LEGEND:-

- CAST-IN-SITU PORTION
- JACK LOCATION IN PLAN
- JACK LOCATION IN ELEVATION

NOTES:-

1. ALL DIMENSIONS ARE IN mm UNLESS OTHERWISE MENTIONED. ONLY WRITTEN DIMENSIONS ARE TO BE FOLLOWED. NO DIMENSIONS SHALL BE SCALED.
2. THE BRIDGE HAS BEEN DESIGNED FOR TWO LANE TRAFFIC FOR LIVE LOAD COMBINATIONS OF CLASS A AND 70R WITH FOOTPATH LIVE LOAD. OR IRC SV VEHICLE WITH FOOTPATH LIVE LOAD. OR THREE LANE TRAFFIC FOR LIVE LOAD COMBINATIONS OF CLASS A AND 70R WITHOUT FOOTPATH LIVE LOAD AS PER IRC:6-2017, WHICHEVER GOVERNS.
3. CONCRETE SHALL BE DESIGN MIX WITH A MINIMUM 28 DAYS CHARACTERISTIC STRENGTH ON 150mm CUBES AS FOLLOWS :-
   PRECAST RCC GIRDER + RCC CAST IN SITU DECK SLAB-35 MPa
4. UNTENSIONED REINFORCEMENT SHALL BE THERMO MECHANICALLY TREATED (TMT), HYSD BARS OF GRADE DESIGNATION Fe-500D CONFORMING TO IS: 1786.
5. CLEAR COVER TO OUTER MOST STEEL SHALL BE AS UNDER:-
   FOR SUPER STRUCTURE-40mm.
6. 65mm. THK. WEARING COURSE COMPRISING OF 40mm THK. BITUMINOUS CONCRETE OVER LAID WITH 25mm THK. MASTIC ASPHALT SHALL BE PROVIDED AS PER SECTION 500 OF MORTH SPECIFICATIONS.
7. FOR LIFTING OF THE SUPERSTRUCTURE 2Nos. OF FREYSSINET JACKS OF CAPACITY **135t** EACH MAY BE REQUIRED AT EACH END. THE LOCATION OF JACKS FOR LIFTING OF THE SUPERSTRUCTURES TO REPLACE BEARINGS ETC. IS SHOWN ↑ THUS THIS SHALL BE DISTINCTLY ETCHED FOR EASY IDENTIFICATION ON THE ABUTMENT CAPS
8. DURING THE LIFTING OPERATION OF SUPERSTRUCTURE ALL THE JACKS PLACED UNDER THE END DIAPHRAGM IN LINE WITH THE BEARINGS SHALL BE OPERATED SIMULTANEOUSLY USING SINGLE OPERATING CONSOLE, GROUPING THE PUMP AND CONTROL SYSTEM SO AS TO ENSURE THAT THE REACTIONS ON ALL THE JACKS ARE EQUAL AT ALL TIMES.
9. PRECAST GIRDERS SHALL BE CAST IN ONE CONCRETING OPERATION IN CASTING YARD WITHOUT ANY CONSTRUCTION JOINT.
10. EACH PRECAST GIRDER WILL BE LIFTED BY USING LIFTING STRANDS AT EITHER END. DURING LIFTING, GIRDER SHALL BE KEPT PLUMB AND UPRIGHT SELF WEIGHT OF GIRDER IS **545kN.**

SEQUENCE OF CONSTRUCTION:-

AGE OF GIRDER (IN DAYS)	ACTIVITY	STRENGTH OF CONC. (IN MPa)
0	CASTING OF LONGITUDINAL GIRDER AT CASTING YARD WITH PORTION OF DIAPHRAGM	–
14 to 28	POSITION OF LONGITUDINAL GIRDER ON TEMPORARY BRGS. AND HOLD THEM IN POSITION BY LATERAL BRACING. REINF. OF DECK SLAB & END DIAPHRAGM WILL BE FIXED IN POSITION	30
28	CASTING OF DECK SLAB ALONG WITH CROSS GIRDER	35
28 to 42	AVERAGE AGE OF GIRDER WHEN COMPOSITE ACTION TAKES PLACE	35
42 to 56	FIXING THE CRASH BARRIER AND LAYING OFWEARING COAT	35
56	AVERAGE AGE OF GIRDER WHEN SILD & CWLL ON IT	35

REFERENCE DRAWINGS:-

1. REINFORCEMENT DETAILS OF LONGITUDINAL GIRDER:
   -NIRTTP/NAG-MUG/KHESTE/RCC-G/22m/02
2. REINFORCEMENT DETAILS OF END CROSS GIRDER:
   -NIRTTP/NAG-MUG/KHESTE/RCC-G/22m/03
3. REINFORCEMENT DETAILS OF RCC DECK SLAB:
   -NIRTTP/NAG-MUG/KHESTE/RCC-G/22m/04(SHEET 1&2)
4. DETAILS OF LOAD AND FORCES FOR POT/PTFE BEARINGS:
   -NIRTTP/NAG-MUG/KHESTE/RCC-G/22m/05

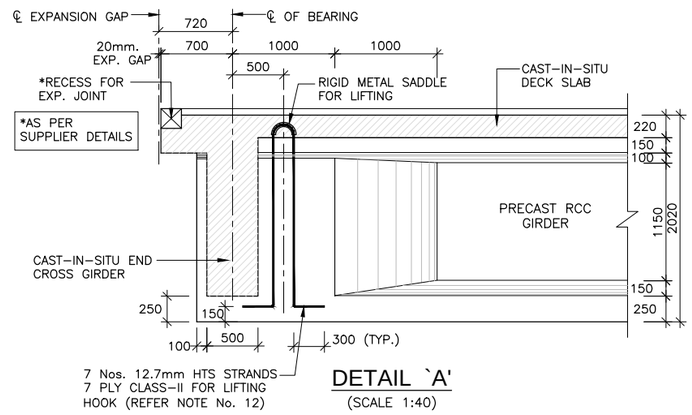

DETAIL `A'

(SCALE 1:40)

EMPLOYER	PROJECT	DESIGN CONSULTANT					
Government of Nepal Ministry of Physical Infrastructure and Transport, Department of Roads, Foreign Co-operation Branch	Nepal India Regional Trade and Transport Project (NIRTTP) (IDA CREDIT No. 5273 - NEP) Detailed Design of Kathmandu (Nagdhunga) - Naubise - Mugling Road and Bridges	Intercontinental Consultants & Technocrats Pvt.Ltd, A-8, Green Park, New Delhi - 110016 Ph : 4086-3000, Fax 2685-5252 In Joint Venture With Soosung Engineering Co. Ltd., South Korea	In Association With Full Bright Consultancy (Pvt.) Ltd. 316,Baburam Acharya Sadak, Sinamangal, Kathmandu, GPO Box: 4970, Kathmandu, Nepal	Prepared By		K.M.JOHRI	DRAWING TITLE: DIMENSION DETAILS OF PRECAST RCC GIRDER & CAST-IN-SITU SLAB SUPERSTRUCTURE EFFECTIVE SPAN : 22.00m
				Designed By		V.CHAUDHARY	
				Checked By		P.K.KHAN	Drawing No.: NIRTTP/NAG-MUG/KHESTE/RCC-G/22m/01
				Approved By		B.N.SINGH	

Scale:	Date: JUNE-2018
As Shown	(SHEET 1 OF 2)

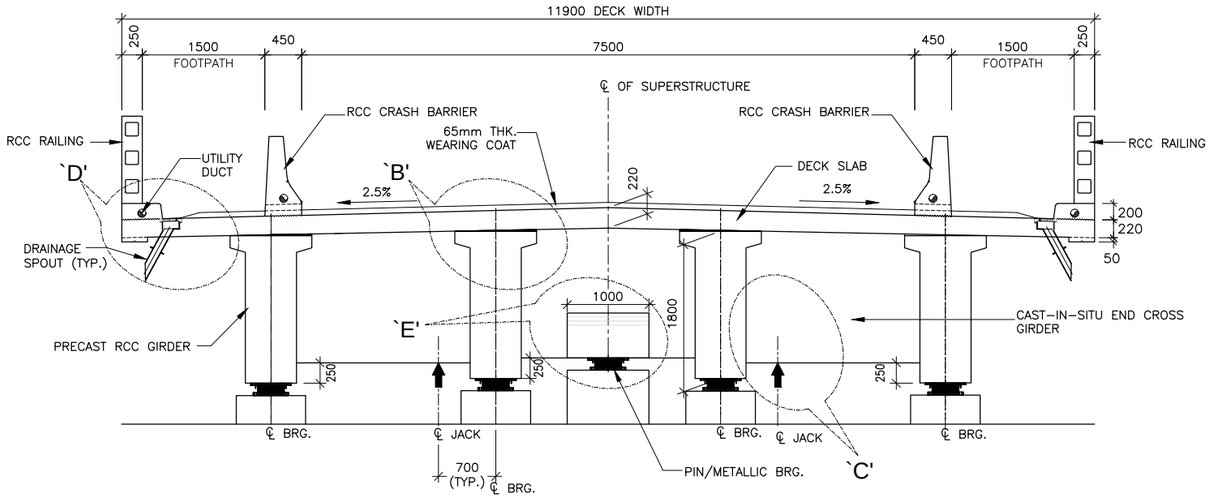

SECTION AT SUPPORT
(SCALE 1:50)

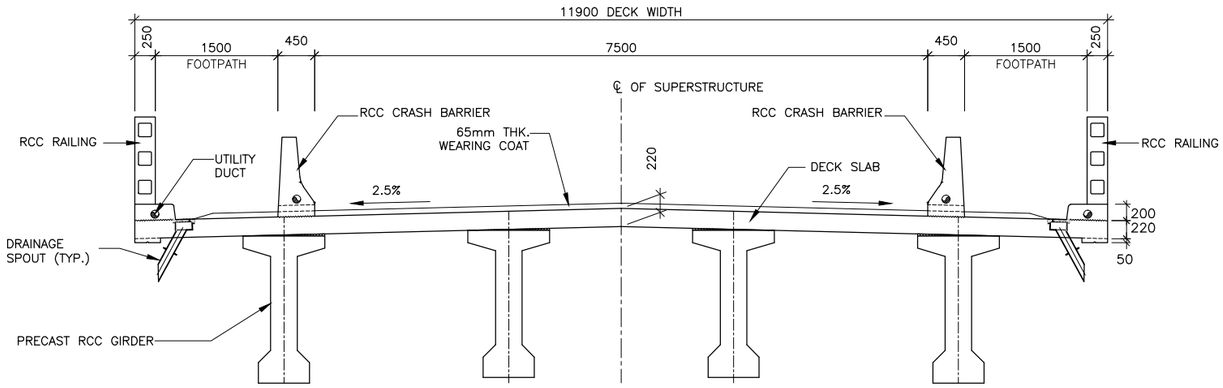

SECTION AT MID
(SCALE 1:50)

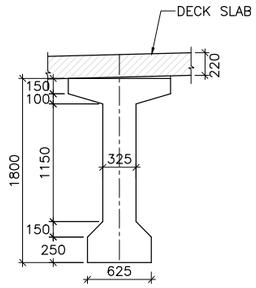

AT MID SPAN

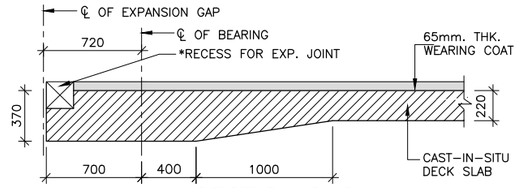

SECTION 2 - 2
(SCALE 1:30)

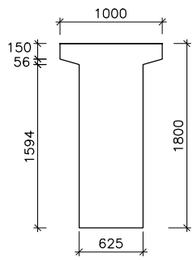

AT SUPPORT

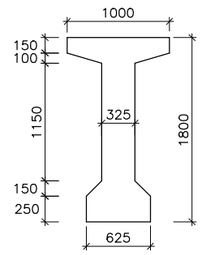

AT MID SPAN

DETAILS OF PRECAST
RCC GIRDER
(SCALE 1:40)

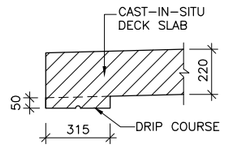

DETAIL - `D'
(SCALE 1:20)

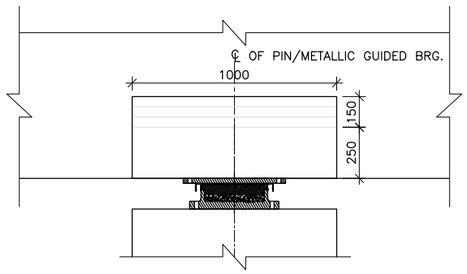

DETAIL - E
(SCALE 1:20)

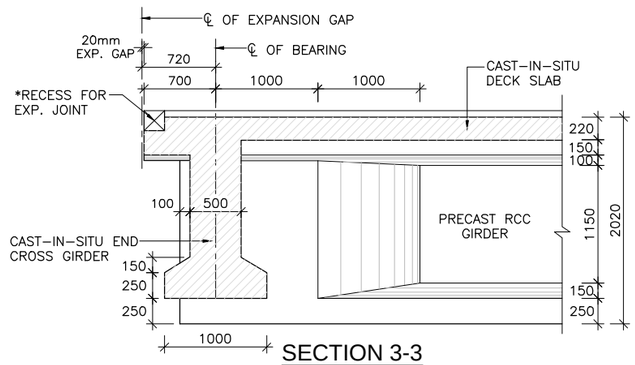

SECTION 3-3
(SCALE 1:40)

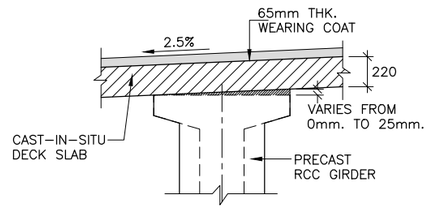

DETAIL -`B'
(SCALE 1:30)

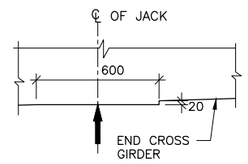

DETAIL - `C'
DETAIL OF CROSS GIRDER AT JACK LOCATION
(SCALE 1:20)

EMPLOYER	PROJECT	DESIGN CONSULTANT					
Government of Nepal Ministry of Physical Infrastructure and Transport, Department of Roads, Foreign Co-operation Branch	Nepal India Regional Trade and Transport Project (NIRTTP) (IDA CREDIT No. 5273 - NEP) Detailed Design of Kathmandu (Nagdhunga) - Naubise - Mugling Road and Bridges	Intercontinental Consultants & Technocrats Pvt.Ltd, A-8, Green Park, New Delhi - 110016 Ph : 4086-3000, Fax 2685-5252 In Joint Venture With Soosung Engineering Co. Ltd., South Korea	In Association With Full Bright Consultancy (Pvt.) Ltd. 316,Baburam Acharya Sadak, Sinamangal, Kathmandu, GPO Box: 4970, Kathmandu, Nepal	Prepared By		K.M.JOHRI	DRAWING TITLE: DIMENSION DETAILS OF PRECAST RCC GIRDER & CAST-IN-SITU SLAB SUPERSTRUCTURE EFFECTIVE SPAN : 22.00m
				Designed By		V.CHAUDHARY	
				Checked By		P.K.KHAN	
				Approved By		B.N.SINGH	Drawing No.: NIRTTP/NAG-MUG/KHESTE/RCC-G/22m/01

Scale:	Date: JUNE-2018
As Shown	(SHEET 2 OF 2)

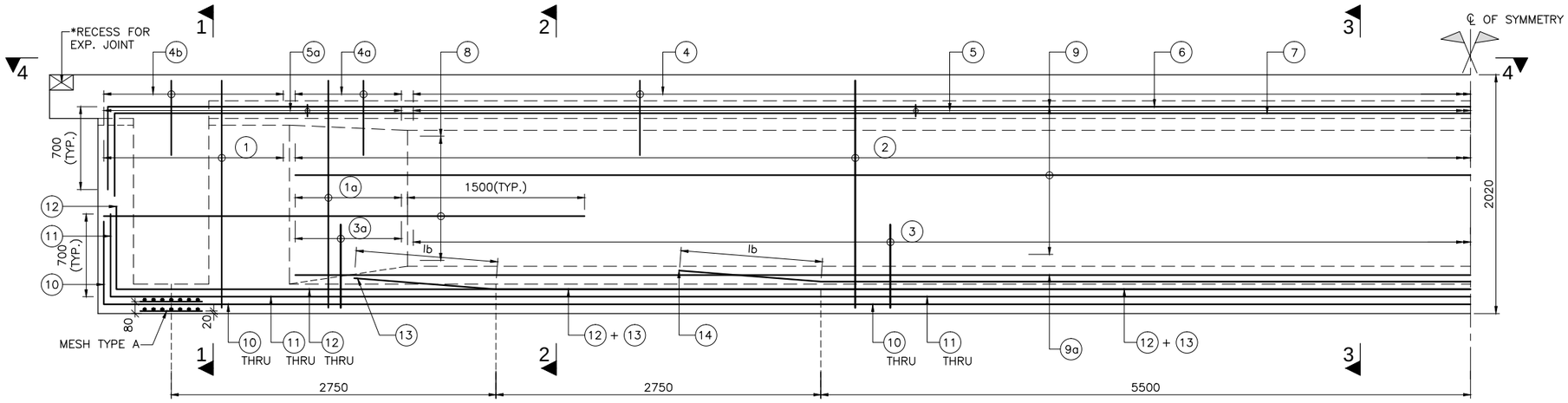

SECTIONAL ELEVATION OF GIRDER

(SCALE 1:30)

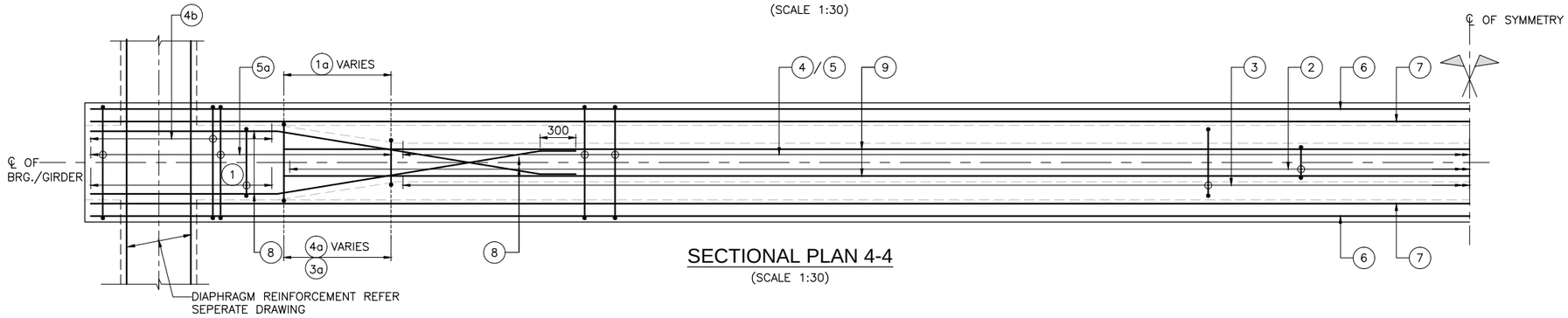

SECTIONAL PLAN 4-4

(SCALE 1:30)

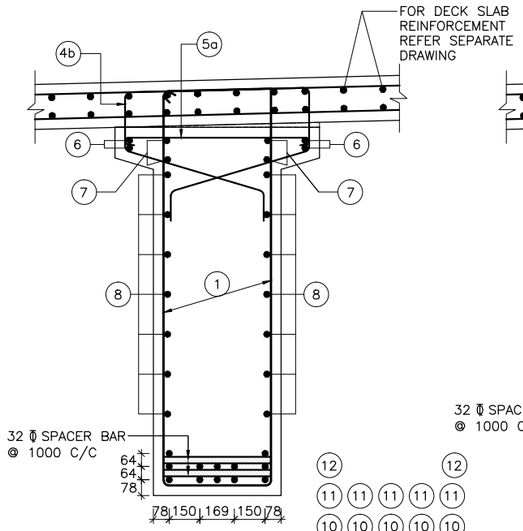

SECTION - 1-1

(SCALE 1:20)

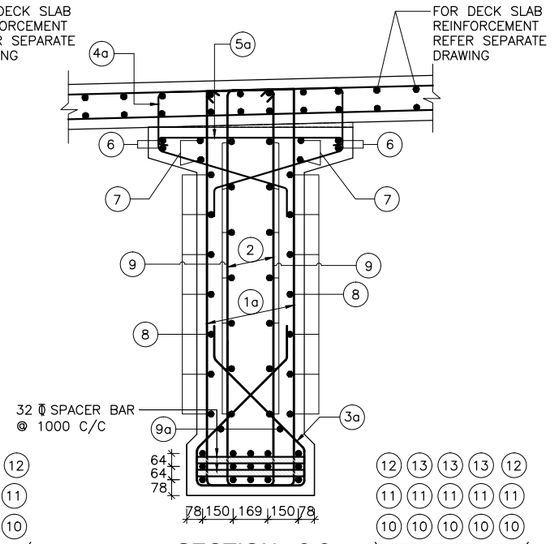

SECTION - 2-2

(SCALE 1:20)

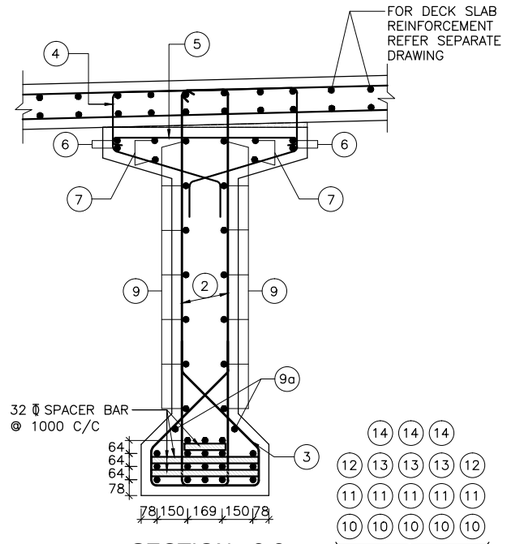

SECTION - 3-3

(SCALE 1:20)

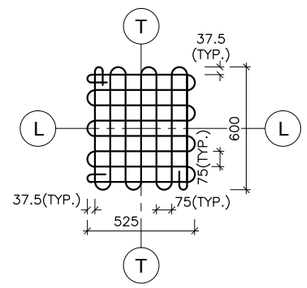

DETAIL OF 8 ϕ MESH TYPE `A'

(IN TWO LAYERS)
(SCALE = 1:20)

NOTES:-

1. ALL DIMENSIONS ARE IN MILLIMETERS AND LEVELS ARE IN METERS UNLESS OTHERWISE SPECIFIED.
2. DIMENSIONS ARE NOT TO BE SCALED. ONLY WRITTEN DIMENSIONS SHALL BE FOLLOWED.
3. UNTENSIONED REINFORCEMENT SHALL BE THERMO MECHANICALLY TREATED (TMT), HYSD BARS OF GRADE DESIGNATION Fe–500D CONFORMING TO IS: 1786.
4. CLEAR COVER TO THE OUTERMOST STEEL SHALL BE 40mm UNLESS OTHERWISE SPECIFIED.
5. LAPPING OF REINFORCEMENT SHALL BE AVOIDED AS FAR AS POSSIBLE. IN CASE LAPPING OF BARS BECOMES UNAVOIDABLE, MINIMUM LAP LENGTH OF REINFORCEMENT BARS SHALL BE CALCULATED AS FOLLOW WITH MAXIMUM ALLOWABLE LAPPING (p) OF 50% ONLY. (IRC:112–2011) (CLAUSE:15.2.5.1)
   LAP LENGTH ls = α_1.lbnet
   α_1 = 1.0 FOR p%≤25%
   α_1 = 1.15 FOR 25%≤p%≤33%
   α_1 = 1.4 FOR 33%≤p%≤50%
   (IRC:112–2011) (CLAUSE:15.2.3.3)
   DEVELOPMENT LENGTH (lbnet)
   lbnet = α.lb (α = 1.0)
   lb = kϕ
   k = 40 FOR M30 (Fe500D)
   k = 36 FOR M35 (Fe500D)
   k = 34 FOR M40 (Fe500D)
   FOR UNFAVORABLE BOND CONDITION THE lb SHOULD BE MULTIPLIED BY FACTOR OF 1.43. FOR ϕ>32mm lb, SHOULD BE INCREASED BY MULTIPLYING FACTOR ($\frac{100}{132-\phi}$)

REFERENCE DRAWINGS:-

1. DIMENSIONAL DETAILS OF PRECAST RCC GIRDER & CAST–IN–SITU SLAB SUPERSTRUCTURE:
   –NIRTTP/NAG–MUG/KHESTE/RCC–G/22m/01
2. REINFORCEMENT DETAILS OF END CROSS GIRDER:
   –NIRTTP/NAG–MUG/KHESTE/RCC–G/22m/03
3. REINFORCEMENT DETAILS OF RCC DECK SLAB:
   –NIRTTP/NAG–MUG/KHESTE/RCC–G/22m/04(SHEET 1&2)
4. DETAILS OF LOAD AND FORCES FOR POT/PTFE BEARINGS:
   –NIRTTP/NAG–MUG/KHESTE/RCC–G/22m/05

SCHEDULE OF REINFORCEMENT

BAR MKD.	DESCRIPTION	SHAPE	REMARKS
1	2L–12 ϕ @125 C/C		STIRRUP
1a	2L–12 ϕ @125 C/C		STIRRUP (VARIES)
2	2L–12 ϕ @150 C/C		STIRRUP
3	10 ϕ @150 C/C		
3a	10 ϕ @125 C/C		(VARIES)
4	10 ϕ @150 C/C		
4a	10 ϕ @125 C/C		(VARIES)
4b	10 ϕ @125 C/C		
5	10 ϕ @150 C/C		LINKS
5a	10 ϕ @125 C/C		LINKS
6	12 ϕ –4 Nos.		
7	12 ϕ –4 Nos.		
8	10 ϕ –7 Nos.		ON EACH FACE
9	10 ϕ –7 Nos.		ON EACH FACE
9a	10 ϕ –1 Nos.		ON EACH FACE
10	32 ϕ –5 Nos.		
11	32 ϕ –5 Nos.		
12	32 ϕ –2 Nos.		
13	32 ϕ –3 Nos.		
14	32 ϕ –3 Nos.		

EMPLOYER	PROJECT	DESIGN CONSULTANT					
Government of Nepal Ministry of Physical Infrastructure and Transport, Department of Roads, Foreign Co-operation Branch	Nepal India Regional Trade and Transport Project (NIRTTP) (IDA CREDIT No. 5273 - NEP) Detailed Design of Kathmandu (Nagdhunga) - Naubise - Mugling Road and Bridges	Intercontinental Consultants & Technocrats Pvt.Ltd, A-8, Green Park, New Delhi - 110016 Ph : 4086-3000, Fax 2685-5252 In Joint Venture With Soosung Engineering Co. Ltd., South Korea	In Association With Full Bright Consultancy (Pvt.) Ltd. 316,Baburam Acharya Sadak, Sinamangal, Kathmandu, GPO Box: 4970, Kathmandu, Nepal	Prepared By		K.M.JOHRI	DRAWING TITLE: REINFORCEMENT DETAILS OF LONGITUDINAL GIRDER EFFECTIVE SPAN : 22.00m	Scale: As Shown	Date: JUNE-2018
				Designed By		V.CHAUDHARY			
				Checked By		P.K.KHAN	Drawing No.: NIRTTP/NAG-MUG/KHESTE/RCC-G/22m/02		
				Approved By		B.N.SINGH			

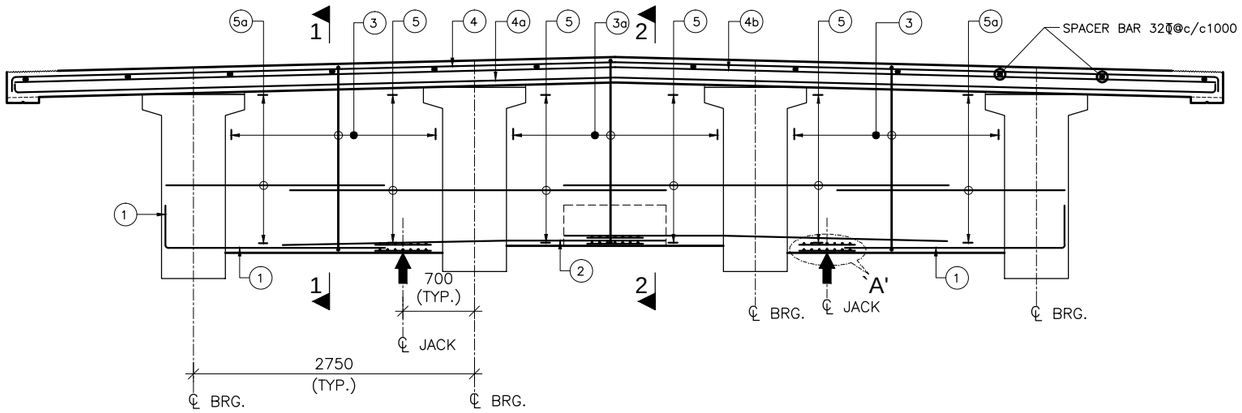

SECTIONAL ELEVATION OF END DIAPHRAGM

(SCALE 1:40)

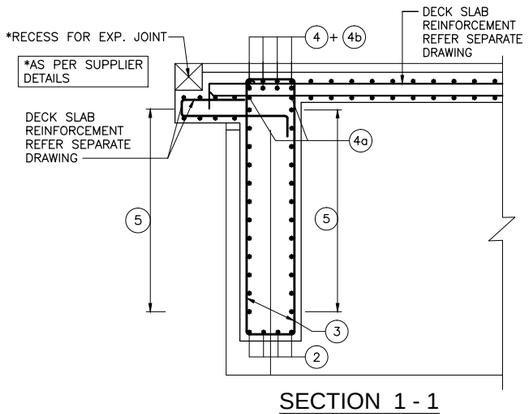

SECTION 1 - 1

(SCALE 1:30)

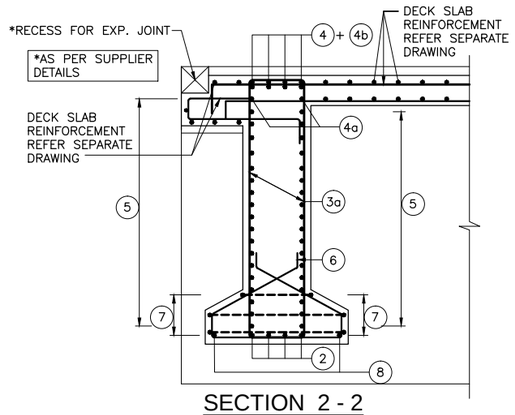

SECTION 2 - 2

(SCALE 1:30)

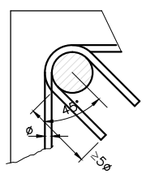

TYPICAL DETAIL INDICATING ANCHORAGE OF STIRRUP

(SCALE 1:30)

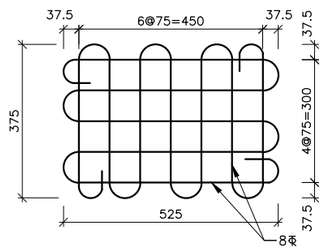

DETAIL OF 8ϕ MESH (M1) REINF. FOR JACK LOCATION

(SCALE 1:10)

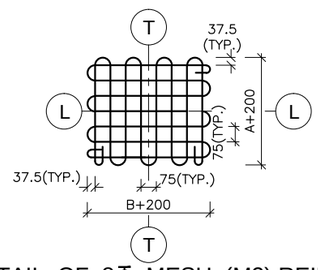

DETAIL OF 8ϕ MESH (M2) REINF. FOR PIN / METALLIC GUIDED BEARING

WHERE A & B ARE SIZE OF BEARING

(SCALE 1:20)

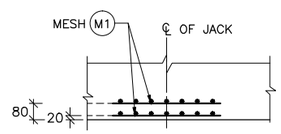

DETAIL - `A'

(SCALE 1:20)

NOTES:-

1. ALL DIMENSIONS ARE IN MILLIMETERS AND LEVELS ARE IN METERS UNLESS OTHERWISE SPECIFIED.
2. DIMENSIONS ARE NOT TO BE SCALED. ONLY WRITTEN DIMENSIONS SHALL BE FOLLOWED.
3. UNTENSIONED REINFORCEMENT SHALL BE THERMO MECHANICALLY TREATED (TMT), HYSD BARS OF GRADE DESIGNATION Fe–500D CONFORMING TO IS: 1786.
4. CLEAR COVER TO THE OUTERMOST STEEL SHALL BE 40mm UNLESS OTHERWISE SPECIFIED.
5. LAPPING OF REINFORCEMENT SHALL BE AVOIDED AS FAR AS POSSIBLE. IN CASE LAPPING OF BARS BECOMES UNAVOIDABLE, MINIMUM LAP LENGTH OF REINFORCEMENT BARS SHALL BE CALCULATED AS FOLLOW WITH MAXIMUM ALLOWABLE LAPPING (p) OF 50% ONLY. (IRC:112–2011) (CLAUSE:15.2.5.1)
   LAP LENGTH ls = α_1.lbnet
   α_1 = 1.0 FOR p%≤25%
   α_1 = 1.15 FOR 25%≤p%≤33%
   α_1 = 1.4 FOR 33%≤p%≤50%
   (IRC:112–2011) (CLAUSE:15.2.3.3)
   DEVELOPMENT LENGTH (lbnet)
   lbnet = α.lb (α = 1.0)
   lb = kϕ
   k = 40 FOR M30 (Fe500D)
   k = 36 FOR M35 (Fe500D)
   k = 34 FOR M40 (Fe500D)

FOR UNFAVORABLE BOND CONDITION THE lb SHOULD BE MULTIPLIED BY FACTOR OF 1.43. FOR ϕ>32mm lb, SHOULD BE INCREASED BY MULTIPLYING FACTOR $\left(\frac{100}{132-\phi}\right)$

REFERENCE DRAWINGS:-

1. DIMENSIONAL DETAILS OF PRECAST RCC GIRDER & CAST–IN–SITU SLAB SUPERSTRUCTURE:
   –NIRTTP/NAG–MUG/KHESTE/RCC–G/22m/01
2. REINFORCEMENT DETAILS OF LONGITUDINAL GIRDER:
   –NIRTTP/NAG–MUG/KHESTE/RCC–G/22m/02
3. REINFORCEMENT DETAILS OF RCC DECK SLAB:
   –NIRTTP/NAG–MUG/KHESTE/RCC–G/22m/04(SHEET 1&2)
4. DETAILS OF LOAD AND FORCES FOR POT/PTFE BEARINGS:
   –NIRTTP/NAG–MUG/KHESTE/RCC–G/22m/05

REINFORCEMENT SCHEDULE FOR END DIAPHRAGM

BAR MKD.	DESCRIPTION	SHAPE	REMARKS
1	25ϕ –4 Nos.		
2	25ϕ –4 Nos.		
3	25ϕ –2L @125 c/c		
3a	25ϕ –2L @125 c/c		
4	25ϕ –4 Nos.		
4a	16ϕ –2 Nos.		
4b	25ϕ –4 Nos.		
5	25ϕ –14 Nos.		(ON EACH FACE)
5a	16ϕ –14 Nos.		(ON EACH FACE)
6	12ϕ –7 Nos.		
7	12ϕ –3 Nos.		
8	10ϕ –2 Nos.		

EMPLOYER	PROJECT	DESIGN CONSULTANT					
Government of Nepal Ministry of Physical Infrastructure and Transport, Department of Roads, Foreign Co-operation Branch	Nepal India Regional Trade and Transport Project (NIRTTP) (IDA CREDIT No. 5273 - NEP) Detailed Design of Kathmandu (Nagdhunga) - Naubise - Mugling Road and Bridges	Intercontinental Consultants & Technocrats Pvt.Ltd, A-8, Green Park, New Delhi - 110016 Ph : 4086-3000, Fax 2685-5252 In Joint Venture With Soosung Engineering Co. Ltd., South Korea	In Association With Full Bright Consultancy (Pvt.) Ltd. 316,Baburam Acharya Sadak, Sinamangal, Kathmandu, GPO Box: 4970, Kathmandu, Nepal	Prepared By		K.M.JOHRI	DRAWING TITLE: REINFORCEMENT DETAILS OF END CROSS GIRDER EFFECTIVE SPAN : 22.00m
				Designed By		V.CHAUDHARY	
				Checked By		P.K.KHAN	Drawing No.: NIRTTP/NAG-MUG/KHESTE/RCC-G/22m/03
				Approved By		B.N.SINGH	

Scale:	Date: JUNE-2018
As Shown	

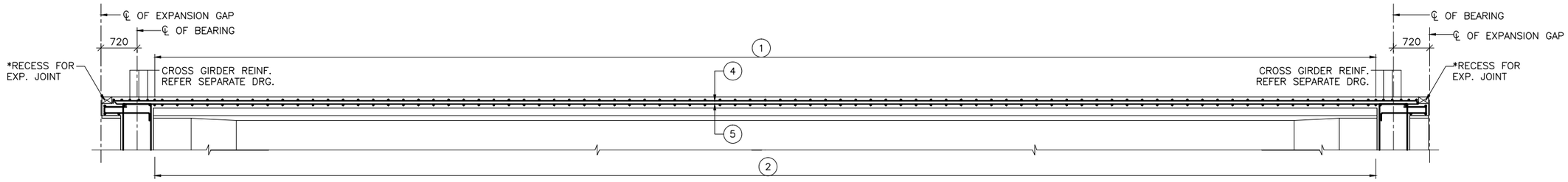

SECTION 1 - 1
(SCALE 1:60)

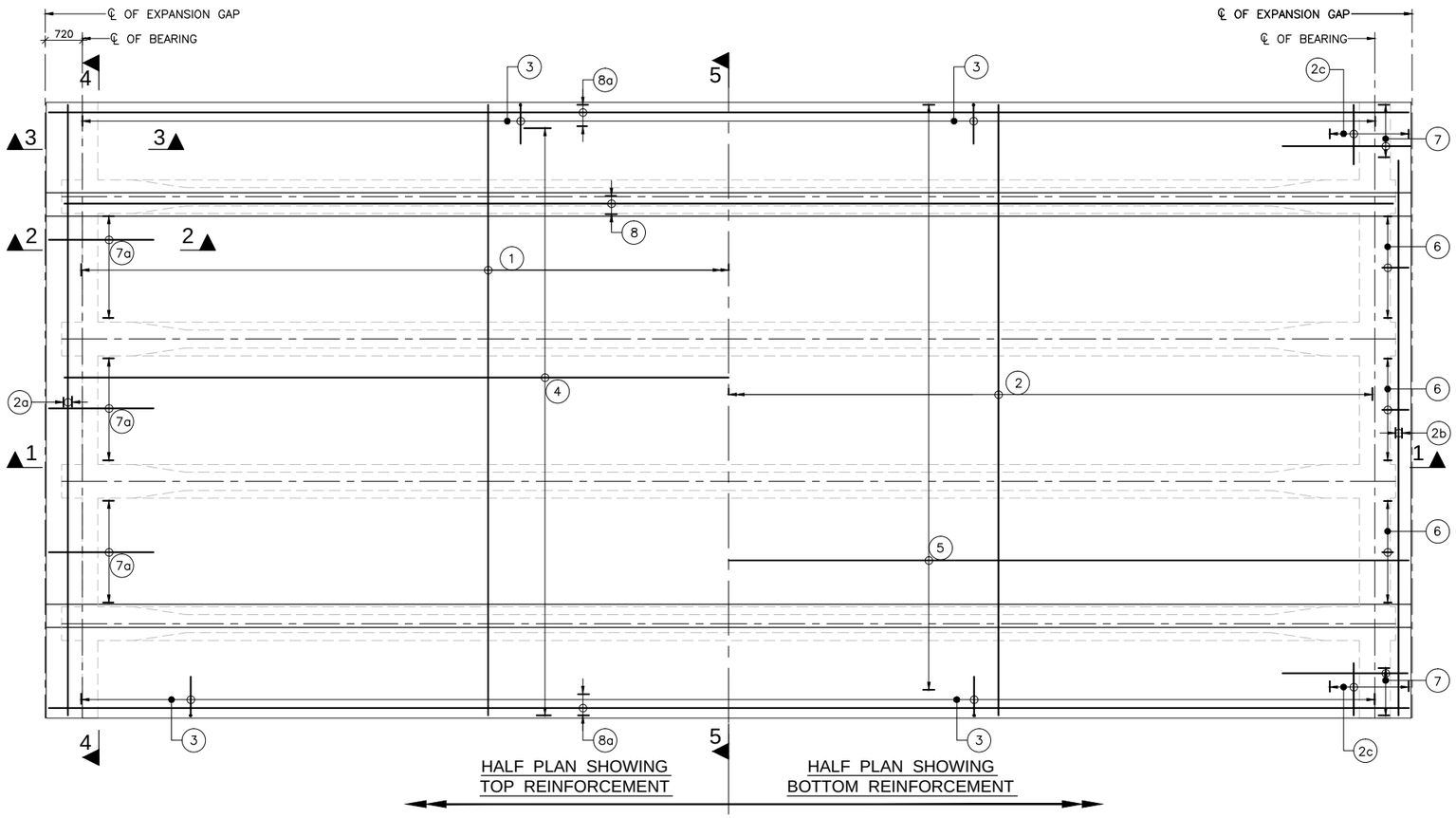

HALF PLAN SHOWING TOP REINFORCEMENT

HALF PLAN SHOWING BOTTOM REINFORCEMENT

PLAN
(SCALE 1:75)

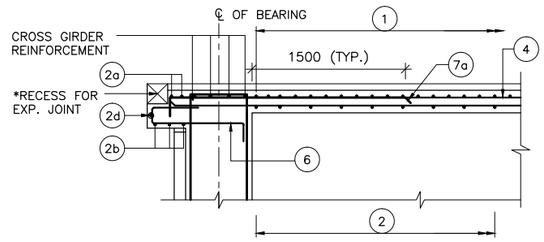

SECTION 2 - 2
(SCALE 1:40)

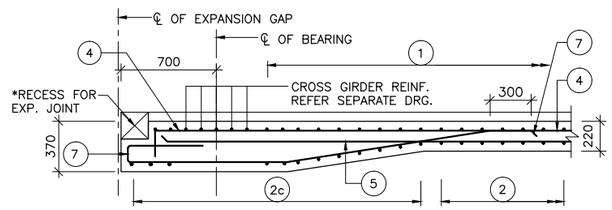

SECTION 3 - 3
(SCALE 1:30)

EMPLOYER	PROJECT	DESIGN CONSULTANT					
Government of Nepal Ministry of Physical Infrastructure and Transport, Department of Roads, Foreign Co-operation Branch	Nepal India Regional Trade and Transport Project (NIRTTP) (IDA CREDIT No. 5273 - NEP) Detailed Design of Kathmandu (Nagdhunga) - Naubise - Mugling Road and Bridges	Intercontinental Consultants & Technocrats Pvt.Ltd, A-8, Green Park, New Delhi - 110016 Ph : 4086-3000, Fax 2685-5252 In Joint Venture With Soosung Engineering Co. Ltd., South Korea	In Association With Full Bright Consultancy (Pvt.) Ltd. 316,Baburam Acharya Sadak, Sinamangal, Kathmandu, GPO Box: 4970, Kathmandu, Nepal	Prepared By		K.M.JOHRI	DRAWING TITLE: REINFORCEMENT DETAILS OF DECK SLAB EFFECTIVE SPAN : 22.00m Drawing No.: NIRTTP/NAG-MUG/KHESTE/RCC-G/22m/04	Scale: As Shown	Date: JUNE-2018 (SHEET 1 OF 2)
				Designed By		V.CHAUDHARY			
				Checked By		P.K.KHAN			
				Approved By		B.N.SINGH			

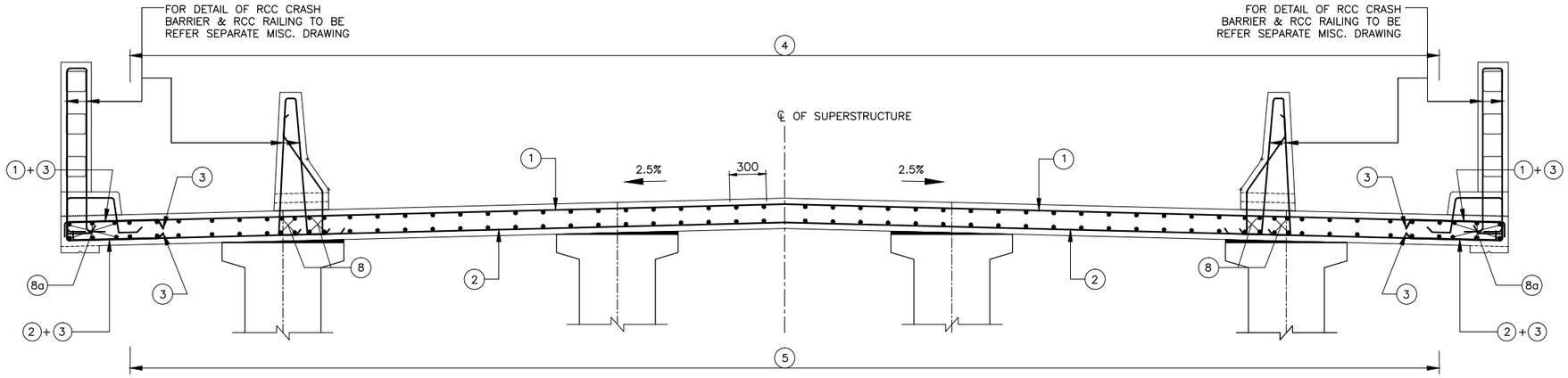

SECTION AT 5 - 5 (MID SPAN)

(SCALE 1:30)

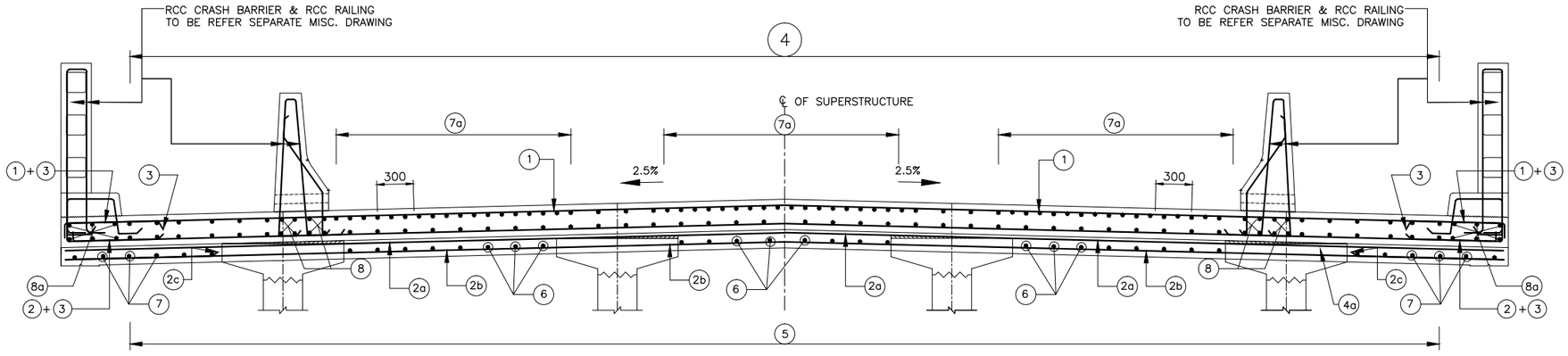

SECTION AT 4 - 4 (NEAR SUPPORT)

(SCALE 1:30)

FOR RCC CRASH BARRIER REINF. REFER MISCELLANEOUS DRG.

NOTES:-

1. ALL DIMENSIONS ARE IN MILLIMETERS AND LEVELS ARE IN METERS UNLESS OTHERWISE SPECIFIED.
2. DIMENSIONS ARE NOT TO BE SCALED. ONLY WRITTEN DIMENSIONS SHALL BE FOLLOWED.
3. UNTENSIONED REINFORCEMENT SHALL BE THERMO MECHANICALLY TREATED (TMT), HYSD BARS OF GRADE DESIGNATION Fe–500D CONFORMING TO IS: 1786.
4. CLEAR COVER TO THE OUTERMOST STEEL SHALL BE 40mm UNLESS OTHERWISE SPECIFIED.
5. LAPPING OF REINFORCEMENT SHALL BE AVOIDED AS FAR AS POSSIBLE. IN CASE LAPPING OF BARS BECOMES UNAVOIDABLE, MINIMUM LAP LENGTH OF REINFORCEMENT BARS SHALL BE CALCULATED AS FOLLOW WITH MAXIMUM ALLOWABLE LAPPING (p) OF 50% ONLY. (IRC:112–2011) (CLAUSE:15.2.5.1)
   LAP LENGTH ls = $\alpha 1$.lbnet
   $\alpha 1$ = 1.0 FOR p%≤25%
   $\alpha 1$ = 1.15 FOR 25%≤p%≤33%
   $\alpha 1$ = 1.4 FOR 33%≤p%≤50%
   (IRC:112–2011) (CLAUSE:15.2.3.3)
   DEVELOPMENT LENGTH (lbnet)
   lbnet = α.lb (α = 1.0)
   lb = kϕ
   k = 40 FOR M30 (Fe500D)
   k = 36 FOR M35 (Fe500D)
   k = 34 FOR M40 (Fe500D)
   FOR UNFAVORABLE BOND CONDITION THE lb SHOULD BE MULTIPLIED BY FACTOR OF 1.43. FOR ϕ>32mm lb, SHOULD BE INCREASED BY MULTIPLYING FACTOR $(\frac{132-\phi}{100})$
6. RECESS FOR EXPANSION JOINT, AS PER SUPPLIER DETAILS.

REFERENCE DRAWINGS:-

1. DIMENSIONAL DETAILS OF PRECAST RCC GIRDER & CAST–IN–SITU SLAB SUPERSTRUCTURE:
   –NIRTTP/NAG–MUG/KHESTE/RCC–G/22m/01
2. REINFORCEMENT DETAILS OF LONGITUDINAL GIRDER:
   –NIRTTP/NAG–MUG/KHESTE/RCC–G/22m/02
3. REINFORCEMENT DETAILS OF END CROSS GIRDER:
   –NIRTTP/NAG–MUG/KHESTE/RCC–G/22m/03
4. DETAILS OF LOAD AND FORCES FOR POT/PTFE BEARINGS:
   –NIRTTP/NAG–MUG/KHESTE/RCC–G/22m/05

REINFORCEMENT SCHEDULE

BAR MKD.	DESCRIPTION	SHAPE	REMARKS
1	12ϕ @100 C/C		
2	12ϕ @100 C/C		
2a	12ϕ @100 C/C		
2b	12ϕ @100 C/C		
2c	12ϕ @100 C/C		
2d	12ϕ –1 Nos.		
3	12ϕ @100 C/C		
4	10ϕ @200 C/C		
5	10ϕ @200 C/C		
6	12ϕ @200 C/C		
7	12ϕ @200 C/C		
7a	12ϕ @200 C/C		
8	16ϕ –8 Nos.		(ON EACH SIDE)
8a	16ϕ –6 Nos.		(ON EACH SIDE)

EMPLOYER	PROJECT	DESIGN CONSULTANT					
Government of Nepal Ministry of Physical Infrastructure and Transport, Department of Roads, Foreign Co-operation Branch	Nepal India Regional Trade and Transport Project (NIRTTP) (IDA CREDIT No. 5273 - NEP) Detailed Design of Kathmandu (Nagdhunga) - Naubise - Mugling Road and Bridges	Intercontinental Consultants & Technocrats Pvt.Ltd, A-8, Green Park, New Delhi - 110016 Ph : 4086-3000, Fax 2685-5252 In Joint Venture With Soosung Engineering Co. Ltd., South Korea	In Association With Full Bright Consultancy (Pvt.) Ltd. 316,Baburam Acharya Sadak, Sinamangal, Kathmandu, GPO Box: 4970, Kathmandu, Nepal	Prepared By		K.M.JOHRI	DRAWING TITLE: REINFORCEMENT DETAILS OF DECK SLAB EFFECTIVE SPAN : 22.00m
				Designed By		V.CHAUDHARY	
				Checked By		P.K.KHAN	Drawing No.: NIRTTP/NAG-MUG/KHESTE/RCC-G/22m/04
				Approved By		B.N.SINGH	

Scale:	Date: JUNE-2018
As Shown	(SHEET 2 OF 2)

LEGEND:-

B1	⊕	FREE SLIDING POT–CUM–PTFE BEARING
B2	◎	PIN BEARING
B3	▭	METALLIC GUIDED BEARING

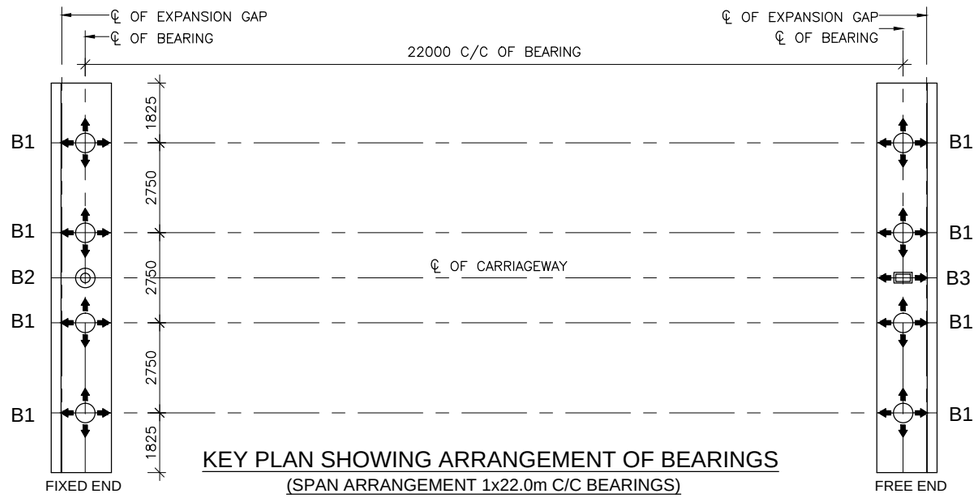

KEY PLAN SHOWING ARRANGEMENT OF BEARINGS

(SPAN ARRANGEMENT 1x22.0m C/C BEARINGS)

NOTES:–

1. MATERIAL SPECIFICATIONS, DESIGN OF BEARINGS, ACCEPTANCE CRITERIA AND INSTALLATION MORTH SHALL BE IN ACCORDANCE WITH IRC:83 (PART III)–2002 AND MOSRTH SPECIFICATIONS (FOURTH REVISION).
2. BEARINGS SHALL BE OBTAINED FROM MANUFACTURERS APPROVED BY MORTH.
3. INSTALLATION OF BEARINGS SHALL BE UNDER THE SUPERVISION OF REPRESENTATIVE OF THE MANUFACTURER.
4. FOR DESIGN LOADS AND ROTATIONS REFER TABLE IN THE DRAWING.
5. FOR BEARINGS, DETAILED SHOP DRAWINGS SHALL BE PREPARED BY THE SUPPLIER AND BE DULY APPROVED BEFORE MANUFACTURE AND INSTALLATION.
6. THE GROUT/BEDDING MORTAR SHALL BE HIGH STRENGTH FREE FLOWING NON SHRINK GROUT (80 MPa STRENGTH).
7. ALL BEARING SHALL BE PLACED IN TRULY HORIZONTAL PLANE ONLY.
8. FOR DESIGN OF POT BEARINGS, THE DESIGN HORIZONTAL FORCE SHALL, IN NO CASE BE LESS THAN 10% AND GREATER THAN 25% OF THE DESIGN VERTICAL LOAD.
9. THE CONTRACTOR AND SUPPLIER OF BEARINGS SHALL BE FURNISH A MINIMUM TROUBLE FREE WARRANTY OF 10 YEARS AFTER OPENING OF THE BRIDGE.
10. THIS DRAWING SHALL BE READ IN CONJUNCTION WITH:
    DIMENSIONAL DETAILS OF PRECAST RCC GIRDER & CAST–IN–SITU SLAB SUPERSTRUCTURE
    NIRTTP/NAG–MUG/KHESTE/RCC–G/22m/01(SHEET 1&2)

GENERAL DATA:

1. STRUCTURE IS LOCATED IN SEISMIC ZONE : V
2. GRADE OF CONCRETE
   ABUTMENT CAP. M–30
   PEDESTAL M–40

TABLE SHOWING DATA FOR DESIGN OF BEARINGS

SL. No.	BEARING TYPE	LOAD CONDITION	LOADS, FORCES, MOVEMENTS AND ROTATION DATA										BEARING (Nos.) PER SPAN
			VERTICAL LOAD (kN)		HORIZONTAL FORCE (kN)				ROTATION (RAD)		MOVEMENT (mm)		
			CASE	MAGNITUDE	LONGITUDINAL		TRANSVERSE		CASE	MAGNITUDE	LONGITUDINAL	TRANSVERSE	
(1)	(2)	(3)	(4)	(5)	(6)	(7)	(8)	(9)	(10)	(11)	(12)	(13)	(14)
1.	FREE POT –CUM PTFE	NORMAL	MAXIMUM (WITH LIVE LOAD)	1516	COEXISTING	152	COEXISTING	–	COEXISTING	0.002	–16.5/16.2	4.70	8
			MINIMUM (WITH LIVE LOAD)	576	COEXISTING	58	COEXISTING	–	COEXISTING	0.002	–16.5/16.2	4.70	
			MINIMUM (WITHOUT LIVE LOAD)	440	COEXISTING	44	COEXISTING	–	COEXISTING	0.002	–16.5/16.2	4.70	
		SEISMIC (LONGITUDINAL)	MAXIMUM (WITH LIVE LOAD)	884	COEXISTING	–	COEXISTING	–	COEXISTING	0.002	–16.5/16.2	4.70	
			MINIMUM (WITH LIVE LOAD)	522	COEXISTING	–	COEXISTING	–	COEXISTING	0.002	–16.5/16.2	4.70	
			MINIMUM (WITHOUT LIVE LOAD)	487	COEXISTING	–	COEXISTING	–	COEXISTING	0.002	–16.5/16.2	4.70	
		SEISMIC (TRANSVERSE)	MAXIMUM (WITH LIVE LOAD)	884	COEXISTING	–	COEXISTING	–	COEXISTING	0.002	–16.5/16.2	4.70	
			MINIMUM (WITH LIVE LOAD)	522	COEXISTING	–	COEXISTING	–	COEXISTING	0.002	–16.5/16.2	4.70	
			MINIMUM (WITHOUT LIVE LOAD)	487	COEXISTING	–	COEXISTING	–	COEXISTING	0.002	–16.5/16.2	4.70	
2.	PIN BEARING	NORMAL	MAXIMUM (WITH LIVE LOAD)	–	COEXISTING	278	COEXISTING	–	COEXISTING	0.002	–	–	1
			MINIMUM (WITH LIVE LOAD)	–	COEXISTING	203	COEXISTING	–	COEXISTING	0.002	–	–	
			MINIMUM (WITHOUT LIVE LOAD)	–	COEXISTING	203	COEXISTING	–	COEXISTING	0.002	–	–	
		SEISMIC (LONGITUDINAL)	MAXIMUM (WITH LIVE LOAD)	–	COEXISTING	2469	COEXISTING	405	COEXISTING	0.002	–	–	
			MINIMUM (WITH LIVE LOAD)	–	COEXISTING	2469	COEXISTING	365	COEXISTING	0.002	–	–	
			MINIMUM (WITHOUT LIVE LOAD)	–	COEXISTING	2433	COEXISTING	365	COEXISTING	0.002	–	–	
		SEISMIC (TRANSVERSE)	MAXIMUM (WITH LIVE LOAD)	–	COEXISTING	766	COEXISTING	1349	COEXISTING	0.002	–	–	
			MINIMUM (WITH LIVE LOAD)	–	COEXISTING	766	COEXISTING	1216	COEXISTING	0.002	–	–	
			MINIMUM (WITHOUT LIVE LOAD)	–	COEXISTING	766	COEXISTING	811	COEXISTING	0.002	–	–	
3.	METALLIC GUIDE BEARING	NORMAL	MAXIMUM (WITH LIVE LOAD)	–	COEXISTING	–	COEXISTING	–	COEXISTING	0.002	–16.5/16.2	–	1
			MINIMUM (WITH LIVE LOAD)	–	COEXISTING	–	COEXISTING	–	COEXISTING	0.002	–16.5/16.2	–	
			MINIMUM (WITHOUT LIVE LOAD)	–	COEXISTING	–	COEXISTING	–	COEXISTING	0.002	–16.5/16.2	–	
		SEISMIC (LONGITUDINAL)	MAXIMUM (WITH LIVE LOAD)	–	COEXISTING	–	COEXISTING	405	COEXISTING	0.002	–16.5/16.2	–	
			MINIMUM (WITH LIVE LOAD)	–	COEXISTING	–	COEXISTING	365	COEXISTING	0.002	–16.5/16.2	–	
			MINIMUM (WITHOUT LIVE LOAD)	–	COEXISTING	–	COEXISTING	365	COEXISTING	0.002	–16.5/16.2	–	
		SEISMIC (TRANSVERSE)	MAXIMUM (WITH LIVE LOAD)	–	COEXISTING	–	COEXISTING	1349	COEXISTING	0.002	–16.5/16.2	–	
			MINIMUM (WITH LIVE LOAD)	–	COEXISTING	–	COEXISTING	1216	COEXISTING	0.002	–16.5/16.2	–	
			MINIMUM (WITHOUT LIVE LOAD)	–	COEXISTING	–	COEXISTING	811	COEXISTING	0.002	–16.5/16.2	–	

EMPLOYER	PROJECT	DESIGN CONSULTANT					
Government of Nepal Ministry of Physical Infrastructure and Transport, Department of Roads, Foreign Co-operation Branch	Nepal India Regional Trade and Transport Project (NIRTTP) (IDA CREDIT No. 5273 - NEP) Feasibility Study of Kathmandu (Nagdhunga) -Detailed Design of Kathmandu (Nagdhunga) -Naubise - Mugling Road and BridgesNaubise - Mugling Road and Bridges	Intercontinental Consultants & Technocrats Pvt.Ltd, A-8, Green Park, New Delhi - 110016 Ph : 4086-3000, Fax 2685-5252 In Joint Venture With Soosung Engineering Co. Ltd., South Korea	In Association With Full Bright Consultancy (Pvt.) Ltd. 316,Baburam Acharya Sadak, Sinamangal, Kathmandu, GPO Box: 4970, Kathmandu, Nepal	Prepared By	K.M.JOHRI	DRAWING TITLE: DETAILS OF LOADS AND FORCES FOR POT/PTFE BEARINGS EFFECTIVE SPAN : 22.00m	Scale: As Shown
				Designed By	V.CHAUDHARY		Date: JUNE-2018
				Checked By	P.K.KHAN	Drawing No.:	
				Approved By	B.N.SINGH	NIRTTP/NAG-MUG/KHESTE/RCC-G/22m/05	

MACHHED KHOLA BRIDGE

CHAINAGE : 19+525

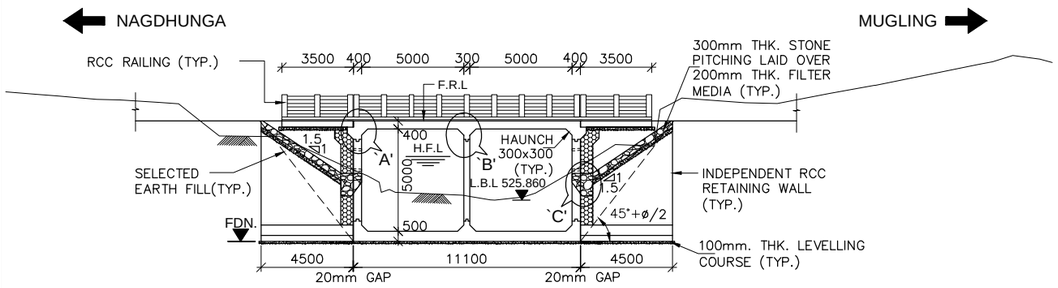

FINISHED ROAD LEVEL (m)	529.800	529.800	529.800	529.800	529.800	CHAINAGE AT 0.000m IS 19+525Km
GROUND LEVEL (m)	528.977	527.531	525.860	527.186	528.497	
FOUNDING LEVEL (m)	523.835	523.835		523.835	523.835	
CHAINAGE (m)	(−)10.070	(−)5.350	0.000	5.350	10.070	

LONGITUDINAL ELEVATION OF PROPOSED BRIDGE

(SCALE 1:200)

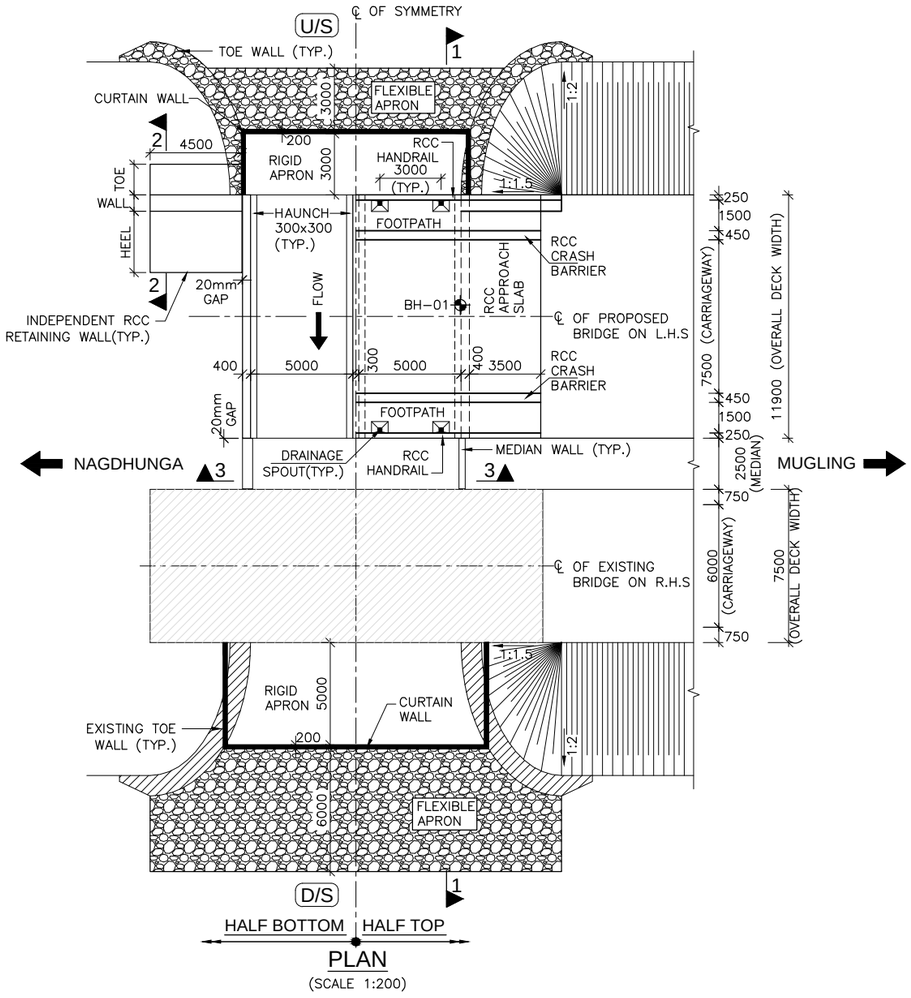

PLAN

(SCALE 1:200)

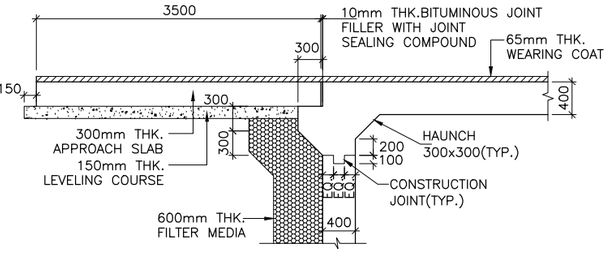

DETAIL-`A'

(SCALE 1:50)

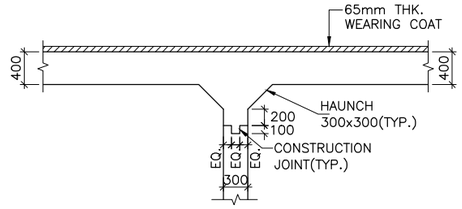

DETAIL-`B'

(SCALE 1:50)

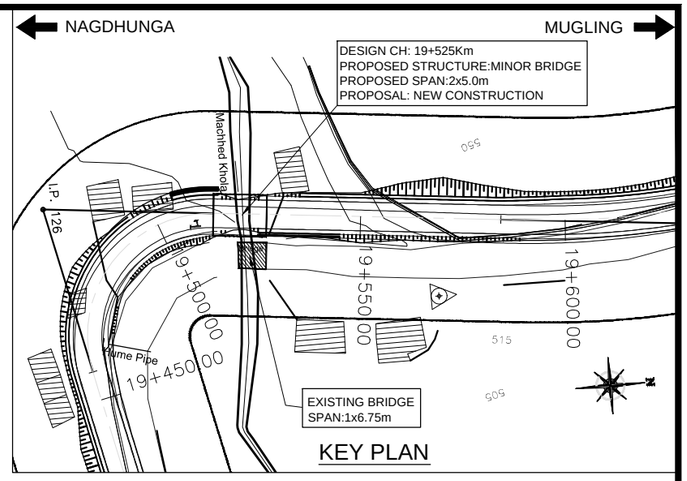

KEY PLAN

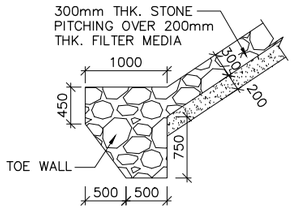

DETAIL-`C'

SCALE−1:50

BH-01

RL.=530.280

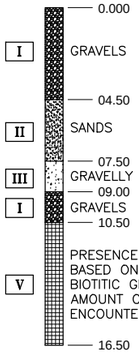

PRESENCE OF THE BEDROCK IS SUGGESTED BASED ON ASSOCIATION OF COARSE−GRAINED, BIOTITIC GNEISS AND EXHIBITION OF SAME AMOUNT OF DIPPING AT ABOUT 40° IN THE ENCOUNTERED BEDROCK.

HYDRAULIC DATA:-

DESIGN DISCHARGE	− 25 cumec
VELOCITY OF FLOW	− 5.19m/s
H.F.L	− 527.890m
M.S.L	− 523.900m

FACE OF OLD ABUTMENT/STRUCTURE SHALL BE MATCHED WITH FACE OF PROPOSED BRIDGE FACE IN CASE OF BIGGER SPAN IN PROPOSED SPAN, MEDIAN WALL SHALL BE PROVIDED IN FLARED SHAPE TO ALLOW SMOOTH PASSAGE OF RIVER WATER.

LEGEND:

F.R.L	:	FINISHED ROAD LEVEL
H.F.L	:	HIGH FLOOD LEVEL
℄	:	CENTER LINE
LVL.	:	LEVEL
TYP.	:	TYPICAL
THK.	:	THICK
D/S	:	DOWNSTREAM
U/S	:	UPSTREAM
G.L	:	GROUND LEVEL
L.B.L	:	LOWEST BED LEVEL
FDN.	:	FOUNDING LEVEL
M.S.L	:	MAXIMUM SCOUR LEVEL
BH	:	BORE HOLE
EQ.	:	EQUAL
RCC	:	REINFORCED CEMENT CONCRETE
PCC	:	PLAIN CEMENT CONCRETE
CC	:	CEMENT CONCRETE
CONC.	:	CONCRETE
RL.	:	REDUCED LEVEL
EXISTING	:	
PROPOSED	:	

EMPLOYER	PROJECT	DESIGN CONSULTANT				
Government of Nepal Ministry of Physical Infrastructure and Transport, Department of Roads, Foreign Co-operation Branch	Nepal India Regional Trade and Transport Project (NIRTTP) (IDA CREDIT No. 5273 - NEP) Detailed Design of Kathmandu (Nagdhunga) - Naubise - Mugling Road and Bridges	Intercontinental Consultants & Technocrats Pvt.Ltd, A-8, Green Park, New Delhi - 110016 Ph : 4086-3000, Fax 2685-5252 In Joint Venture With Soosung Engineering Co. Ltd., South Korea	In Association With Full Bright Consultancy (Pvt.) Ltd. 316,Baburam Acharya Sadak, Sinamangal, Kathmandu, GPO Box: 4970, Kathmandu, Nepal	Prepared By	M.L.GUPTA	DRAWING TITLE: GENERAL ARRANGEMENT DRAWING FOR MINOR BRIDGE AT CH: 19+525KM OVER MACHHED KHOLA (2/5.0mx5.350m) PACKAGE-II (NAUBISE-GALCHI)
				Designed By	NISHTHA S.	
				Checked By	P.K.KHAN	Drawing No.: NIRTTP/NAG-MUG/MACHHED/GAD
				Approved By	B.N.SINGH	

Scale: As Shown

Date: JUNE-2018

(SHEET 1 OF 2)

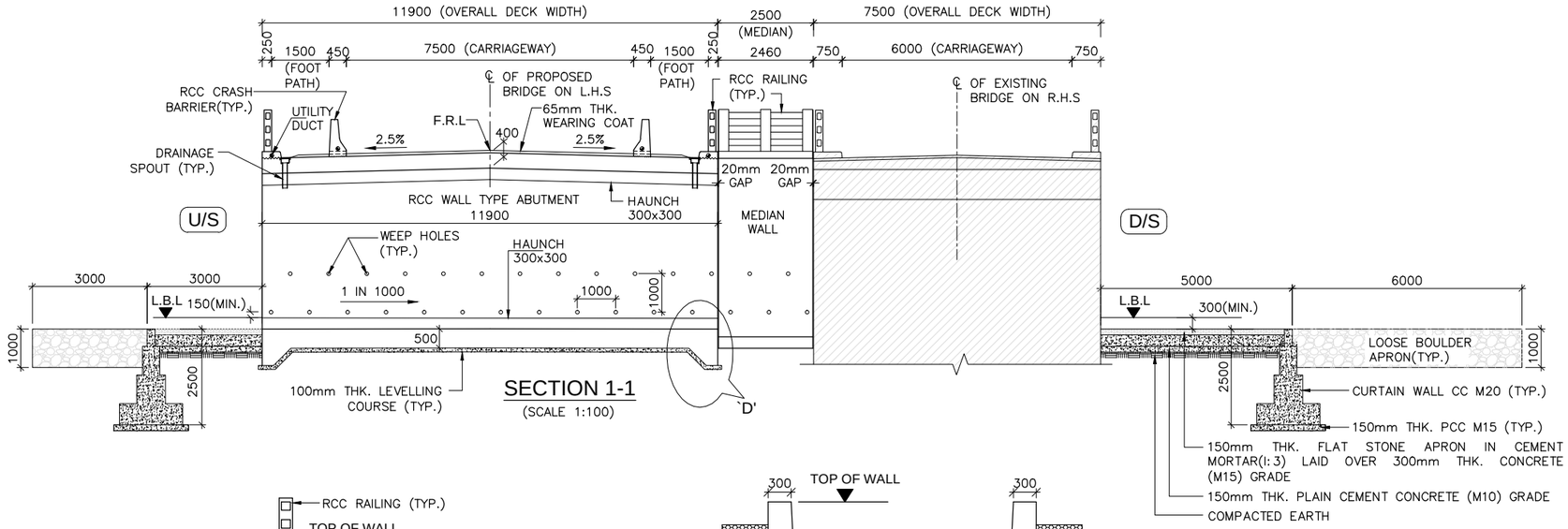

SECTION 1-1
(SCALE 1:100)

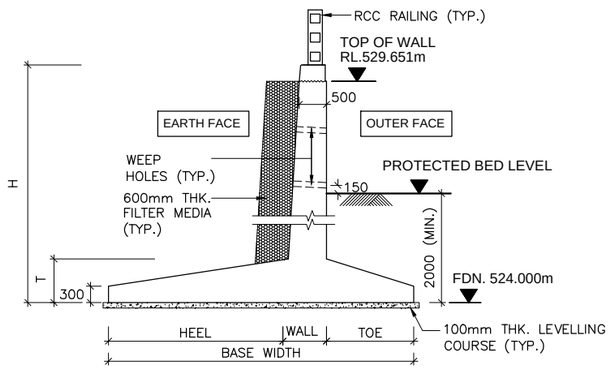

SECTION 2-2
(SCALE 1:75)

REFER SEPARATE DRAWING FOR DETAILS

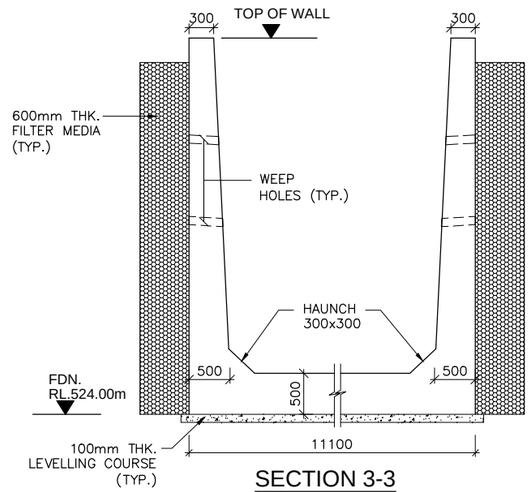

SECTION 3-3
(SCALE 1:50)

U-TYPE TROUGH AS MEDIAN WALL

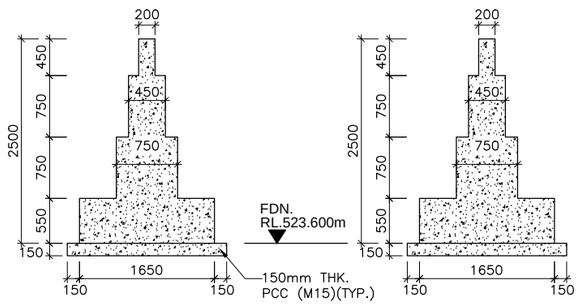

AT DOWNSTREAM AT UPSTREAM

TYPICAL CROSS SECTION OF CURTAIN WALL
(SCALE 1:50)

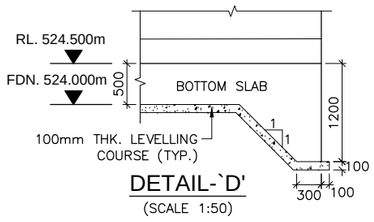

DETAIL-`D'
(SCALE 1:50)

MISCELLANEOUS DRAWINGS:

1. DETAILS OF APPROACH SLAB:
   –NIRTTP/NAG–MUG/PACKAGE–II/MISC.–01
2. DETAILS OF DRAINAGE SPOUT & WEARING COAT:
   –NIRTTP/NAG–MUG/PACKAGE–II/MISC.–02
3. DIMENSIONAL & REINF. DETAILS OF R.C.C CRASH BARRIER:
   –NIRTTP/NAG–MUG/PACKAGE–II/MISC.–03
4. DIMENSIONAL & REINF. DETAILS OF R.C.C RAILING:
   –NIRTTP/NAG–MUG/PACKAGE–II/MISC.–04
5. DIMENSIONAL AND REINFORCEMENT DETAILS OF RCC RETAINING WALL/MEDIAN WALL:
   –NIRTTP/NAG–MUG/PACKAGE–II/MISC.–06

NOTES:-

1. ALL DIMENSIONS ARE IN MILLIMETER AND LEVELS IN METER UNLESS OTHERWISE SPECIFIED.
2. DIMENSIONS ARE NOT TO BE SCALED, ONLY WRITTEN DIMENSIONS SHALL BE FOLLOWED.
3. THE BRIDGE HAS BEEN DESIGNED FOR MOST SEVERE OF:
   (i) ONE LANE OF IRC CLASS 70R LOADING OR TWO LANES OF IRC CLASS A LOADING WHEN FOOTPATHS ARE IN POSITION.
   (ii) ONE LANE OF IRC CLASS 70R LOADING +ONE LANE OF IRC CLASS A LOADING OR 3 LANES OF IRC CLASS A LOADING WHEN FOOTPATHS ARE REMOVED.
   (iii) ONE LANE OF SV LOADING IN ACCORDANCE WITH CLAUSE 204.5 OF IRC–6:2017.
4. MINIMUM CONCRETE COVER, GRADE OF CONCRETE, MINIMUM CEMENT CONTENT & MAXIMUM W/C RATIO SHALL BE AS PER 'MODERATE' CONDITION OF EXPOSURE.
5. CONCRETE SHALL BE DESIGN MIX WITH A MINIMUM 28 DAYS CHARACTERISTIC STRENGTH ON 150mm CUBES AS FOLLOWS :–
   a. LEVELING COURSE (UNDER FOUNDATION) – M10
   b. LEVELING COURSE (UNDER APPROACH SLAB) – M15
   c. BOX STRUCTURE – M30
   d. RETURN/RETAINING WALL – M30
   e. CRASH BARRIER – M40
   f. APPROACH SLAB – M30
6. UNTENSIONED REINFORCEMENT SHALL BE THERMO MECHANICALLY TREATED, (TMT) HIGH YIELD STRENGTH DEFORMED BARS OF GRADE DESIGNATION Fe–500D CONFORMING TO IS: 1786.
7. 65mm THK. WEARING COURSE COMPRISING OF 40mm THICK ASPHALTIC CONCRETE OVERLAID WITH 25mm THICK MASTIC ASPHALT SHALL BE PROVIDED AS PER SECTION 500 OF MORT&H SPECIFICATION.
8. 100mm DIA WEEP HOLES AT 1000mm C/C STAGGERED HORIZONTALLY AND VERTICALLY SHALL BE PROVIDED IN ONE OR TWO LAYERS ABOVE G.L IN VERTICAL WALLS OF BOX RETURN/RETAINING WALLS AT A SLOPE OF 1 VERTICAL TO 20 HORIZONTAL TOWARDS THE DRAINING FACE.
9. WATER TO BE USED IN CONCRETING, & CURING SHALL CONFORM TO CLAUSE 18.4.5 OF IRC:112–2011.
10. LAYING, COMPACTION AND EXTENT OF BACKFILL BEHIND BOX AND RETURN/RETAINING WALLS SHALL CONSIST OF SELECTED EARTH CONFORMING TO APPENDIX:6 OF IRC:78–2014 HAVING PROPERTIES C=0, ϕ= 35°, δ =22.5° & γd = 20 KN/m^3.
11. MINIMUM CLEAR COVER TO OUTER MOST STEEL SHALL BE AS UNDER:–
    (i) EARTH FACE – 75mm
    (ii) NON EARTH FACE – 50mm
12. THE BRIDGE IS DESIGNED FOR PROVISION OF SEISMIC ZONE V AS PER CLAUSE 219 OF IRC:6:2017.
13. SAFE BEARING CAPACITY CONSIDERED IN DESIGN AT PROPOSED FOUNDING LEVEL IS 40T/m^2. THIS SHALL BE ASCERTAINED BEFORE EXECUTION AT SITE.
14. FILTER MEDIA SHALL BE PROVIDED AS PER APPENDIX–6 OF IRC–78:2014.
15. MINIMUM ANCHORAGE OF FOUNDATION IN SOFT ROCK SHALL BE 1.5m AND 0.6m IN HARD ROCK.
16. WHERE FOUNDATION ARE PLACED ON ROCK, TRENCHES AROUND THE FOOTING SHALL BE FILLED UP WITH CONCRETE OF M15 GRADE UP TO TOP OF ROCK.
17. THIS DRAWING SHOULD BE READ IN CONJUNCTION WITH RELEVANT HIGHWAY PLAN AND PROFILE DRAWINGS.
18. ALL CHAINAGES, FRL, G.L SHALL BE CONFIRMED AT SITE PRIOR TO EXECUTION.
19. FOR APPROACH SLAB, DRAINAGE SPOUTS, CRASH BARRIER, PROTECTION WORK, RETAINING WALL DETAILS, REFER SEPARATE DRAWINGS.
20. MINIMUM LONGITUDINAL GRADIENT OF 0.3% SHALL BE PROVIDED IS PROPOSED BRIDGE TO FACILITATE DRAINAGE OF DECK AS PER CLAUSE 105.3.6 OF IRC–5.
21. SIZE OF EACH INDIVIDUAL STONE PITCHING AND LAUNCHING APRON SHALL NOT BE LESS THAN 30CM IN DIAMETER AND 40KG IN WEIGHT OR AS PER TABLE 5.1 & 5.2 OF IRC:89–1997. WHERE THE REQUIRED SIZE STONES ARE NOT ECONOMICALLY AVAILABLE, STONES IN WIRE CRATES MAY BE USED IN PLACE OF ISOLATED STONES OF EQUIVALENT WEIGHT.

REFERENCE DRAWINGS:-

1. REINFORCEMENT DETAILS OF RCC BOX:
   – NIRTTP/NAG–MUG/MACHHED/REINF–01 (SHEET 1, 2 & 3)

EMPLOYER	PROJECT	DESIGN CONSULTANT					
Government of Nepal Ministry of Physical Infrastructure and Transport, Department of Roads, Foreign Co-operation Branch	Nepal India Regional Trade and Transport Project (NIRTTP) (IDA CREDIT No. 5273 - NEP) Detailed Design of Kathmandu (Nagdhunga) - Naubise - Mugling Road and Bridges	Intercontinental Consultants & Technocrats Pvt.Ltd, A-8, Green Park, New Delhi - 110016 Ph : 4086-3000, Fax 2685-5252 In Joint Venture With Soosung Engineering Co. Ltd., South Korea	In Association With Full Bright Consultancy (Pvt.) Ltd. 316,Baburam Acharya Sadak, Sinamangal, Kathmandu, GPO Box: 4970, Kathmandu, Nepal	Prepared By	M.L.GUPTA	DRAWING TITLE: GENERAL ARRANGEMENT DRAWING FOR MINOR BRIDGE AT CH: 19+525KM OVER MACHHED KHOLA (2/5.0mx5.35m) PACKAGE-II (NAUBISE-GALCHI)	Scale: As Shown Date: JUNE-2018
				Designed By	NISHTHA S.		
				Checked By	P.K.KHAN	Drawing No.: NIRTTP/NAG-MUG/MACHHED/GAD	(SHEET 2 OF 2)
				Approved By	B.N.SINGH		

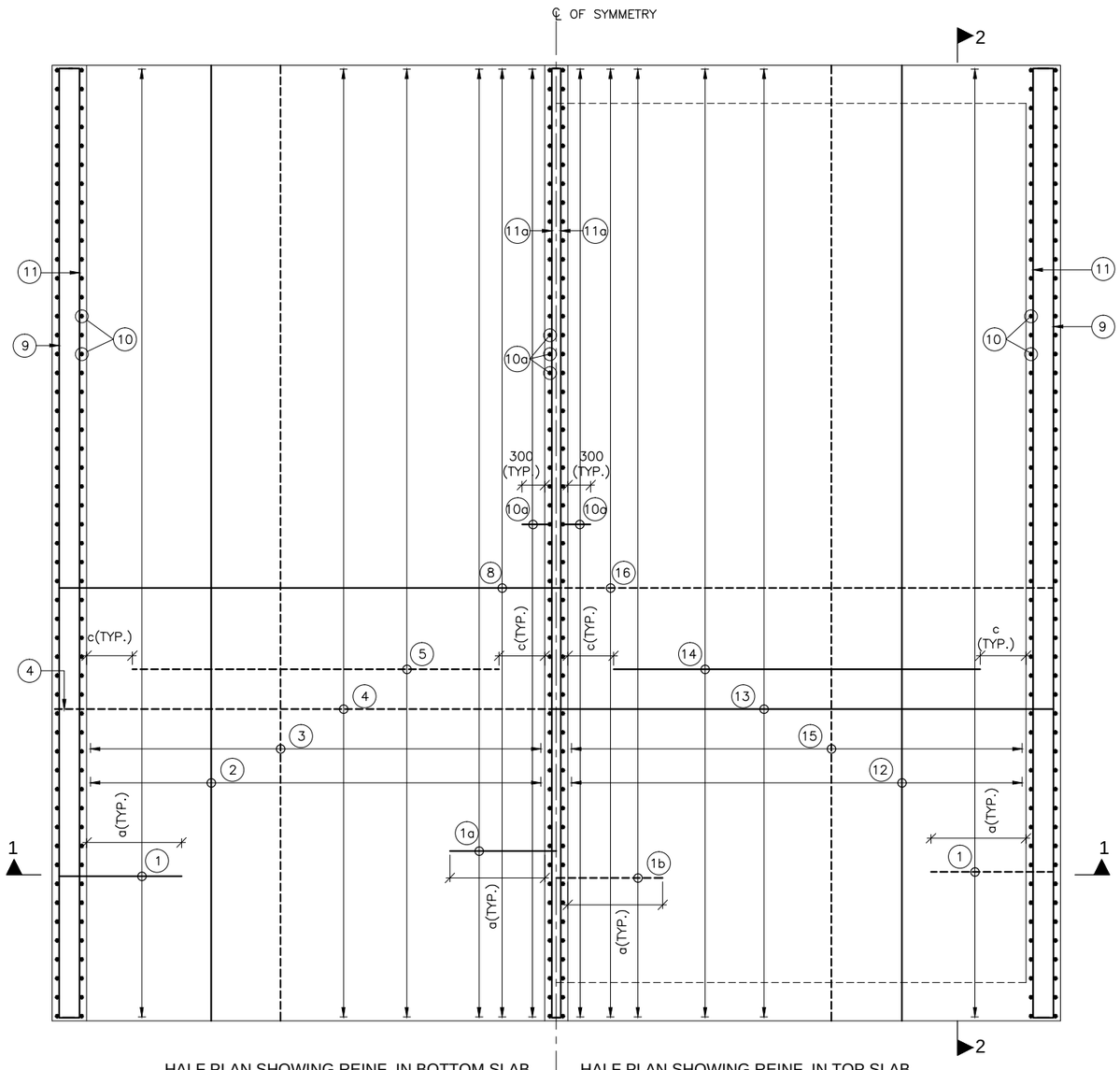

PLAN

(SCALE 1:50)

BARS NO. 6 6a 6b 7 7a 7b 7c NOT SHOWN IN PLAN FOR CLARITY

REINFORCEMENT SCHEDULE

BAR MKD.	DESCRIPTION	SHAPE
1	16 ϕ @ 200 c/c	
1a	16 ϕ @ 200 c/c	
1b	16 ϕ @ 200 c/c	
2	12 ϕ @ 150 c/c	
3	12 ϕ @ 150 c/c	
4	12 ϕ @ 200 c/c	
5	16 ϕ @ 200 c/c	
6	12 ϕ 2x4 NOS.	
6a	12 ϕ 8x2 NOS.	
6b	12 ϕ 4x8 NOS.	
7	12 ϕ @ 200 c/c	150 150
7a	12 ϕ @ 200 c/c	150 150
7b	12 ϕ @ 200 c/c	150 150
7c	12 ϕ @ 200 c/c	150 150
8	16 ϕ @ 200 c/c	
9	12 ϕ @ 150 c/c	
10	16 ϕ @ 170 c/c	
10a	12 ϕ @ 150 c/c	
11	12 ϕ @ 150 c/c	
11a	12 ϕ @ 150 c/c	
12	12 ϕ @ 150 c/c	
13	12 ϕ @ 200 c/c	300 300
14	12 ϕ @ 200 c/c	
15	12 ϕ @ 150 c/c	
16	20 ϕ @ 200 c/c	
17	12 ϕ 2x12 NOS.	
18	12 ϕ 5x2 NOS.	
19	12 ϕ @ 100 c/c	
20	3 NOS. 2L–12 ϕ STIRRUPS	200 400
21	12 ϕ @ 150 c/c	
22	12 ϕ @ 2x2 NOS.	

a = 0.3A OR lb, WHICHEVER IS GREATER
b = 0.3B OR lb, WHICHEVER IS GREATER
c = 0.15A

A = CLEAR SPAN
B = CLEAR HEIGHT

NOTES:-

1. ALL DIMENSIONS ARE IN MILLIMETER UNLESS OTHERWISE MENTIONED. ONLY WRITTEN DIMENSIONS TO BE FOLLOWED. NO DIMENSION SHALL BE SCALED.
2. CONCRETE SHALL BE DESIGN MIX WITH A MINIMUM CHARACTERISTIC STRENGTH OF 30MPa FOR RCC BOX STRUCTURE.
3. CLEAR COVER TO OUTER MOST STEEL SHALL BE AS FOLLOWS:–
   EARTH FACE – 75mm
   OTHER FACE – 50mm
4. UNTENSIONED REINFORCEMENT SHALL BE THERMO MECHANICALLY TREATED, (TMT) HIGH YIELD STRENGTH DEFORMED BARS OF GRADE DESIGNATION FE–500D CONFORMING TO IS: 1786.
5. LAPPING OF REINFORCEMENT SHALL BE AVOIDED AS FAR AS POSSIBLE. IN CASE LAPPING OF BARS BECOMES UNAVOIDABLE, MINIMUM LAP LENGTH OF REINFORCEMENT BARS SHALL BE CALCULATED AS FOLLOW WITH MAXIMUM ALLOWABLE LAPPING (p) OF 50% ONLY
   (IRC:112–2011) (CLAUSE:15.2.5.1)
   LAP LENGTH ls = α_1.lbnet
   α_1 = 1.0 FOR p%≤25%
   α_1 = 1.15 FOR 25%≤p%≤33%
   α_1 = 1.4 FOR 33%≤p%≤50%
   (IRC:112–2011) (CLAUSE:15.2.3.3)
   DEVELOPMENT LENGTH (lbnet)
   lbnet = α.lb (α = 1.0)
   lb = kø
   k = 40 FOR M30 (Fe500D)
   k = 36 FOR M35 (Fe500D)
   k = 34 FOR M40 (Fe500D)
   FOR UNFAVORABLE BOND CONDITION THE lb SHOULD BE MULTIPLIED BY FACTOR OF 1.43.
   FOR ø>32mm lb, SHOULD BE INCREASED BY MULTIPLYING FACTOR $(\frac{100}{132-ø})$

REFERENCE DRAWINGS:-

1 GENERAL ARRANGEMENT DRAWING FOR MINOR BRIDGE OVER MACHHHED KHOLA AT CH:19+525–
NIRTTP/NAG–MUG/MACHHED/GAD (SHEET 1 & 2)

LEGEND:-

---------- TOP/OUTER REINFORCEMENT
———————— BOTTOM/INNER REINFORCEMENT

EMPLOYER	PROJECT	DESIGN CONSULTANT					
Government of Nepal Ministry of Physical Infrastructure and Transport, Department of Roads, Foreign Co-operation Branch	Nepal India Regional Trade and Transport Project (NIRTTP) (IDA CREDIT No. 5273 - NEP) Detailed Design of Kathmandu (Nagdhunga) - Naubise - Mugling Road and Bridges	Intercontinental Consultants & Technocrats Pvt.Ltd, A-8, Green Park, New Delhi - 110016 Ph : 4086-3000, Fax 2685-5252 In Joint Venture With Soosung Engineering Co. Ltd., South Korea	In Association With Full Bright Consultancy (Pvt.) Ltd. 316,Baburam Acharya Sadak, Sinamangal, Kathmandu, GPO Box: 4970, Kathmandu, Nepal	Prepared By	M.L.GUPTA	DRAWING TITLE: REINFORCEMENT DETAILS OF TWO CELL RCC BOX AT CH: 19+525KM PACKAGE-II (NAUBISE-GALCHI)	Scale: As Shown
				Designed By	NISHTHA S.		Date: JUNE-2018
				Checked By	P.K.KHAN	Drawing No.: NIRTTP/NAG-MUG/MACHHED/REINF-01	(SHEET 1 OF 3)
				Approved By	B.N.SINGH		

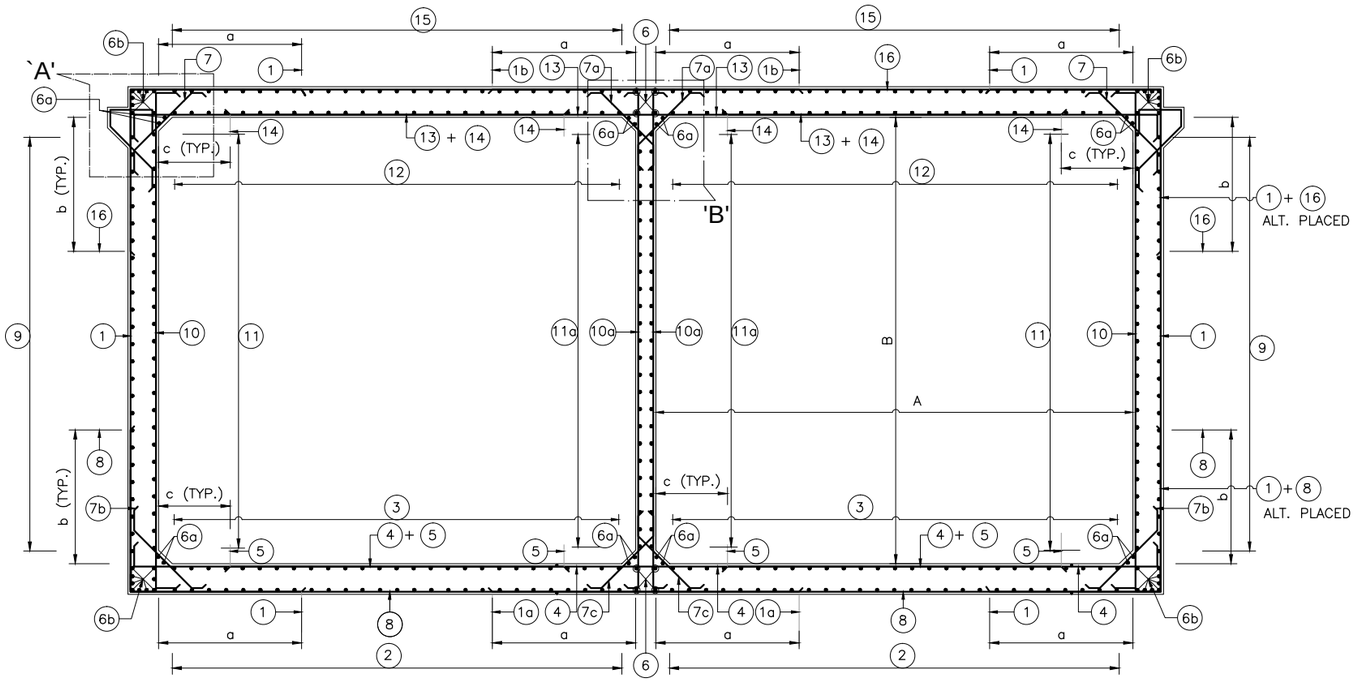

SECTION 1-1
(SCALE 1:60)

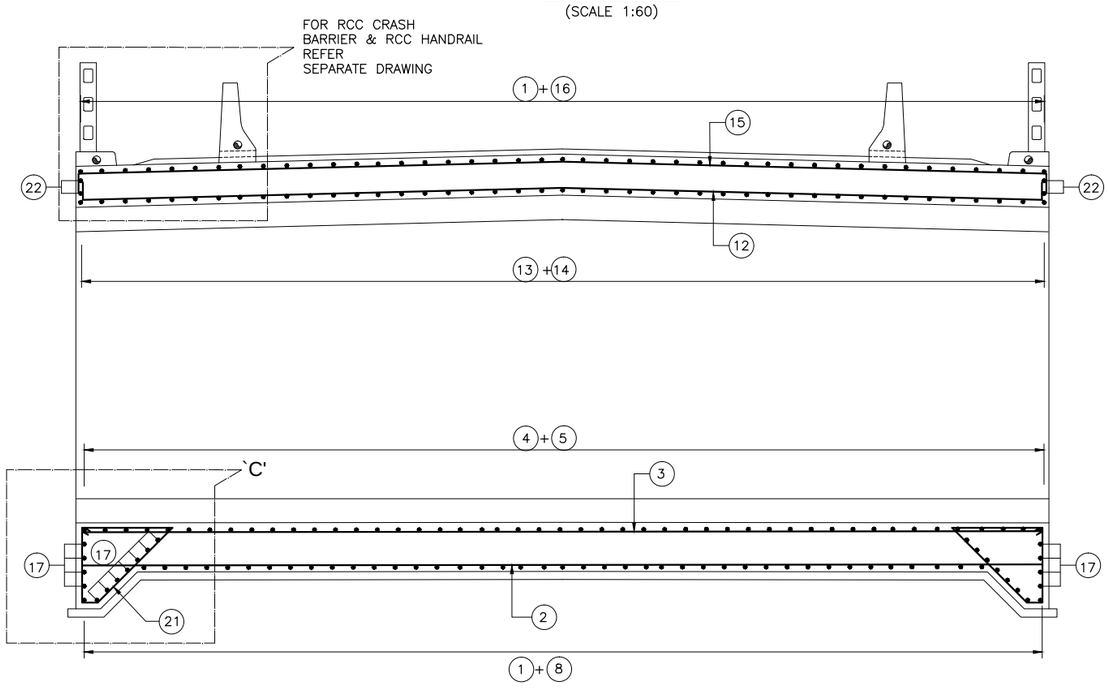

SECTION 2-2
(SCALE 1:50)

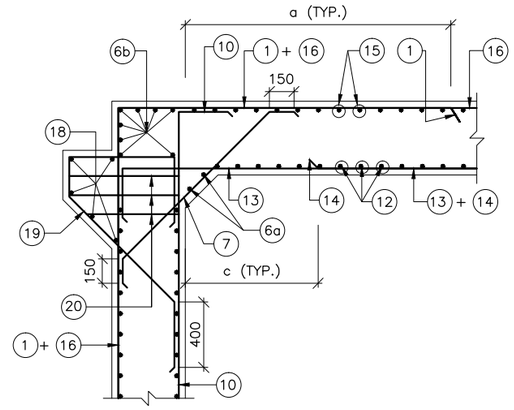

DETAIL AT 'A'
(SCALE 1:25)

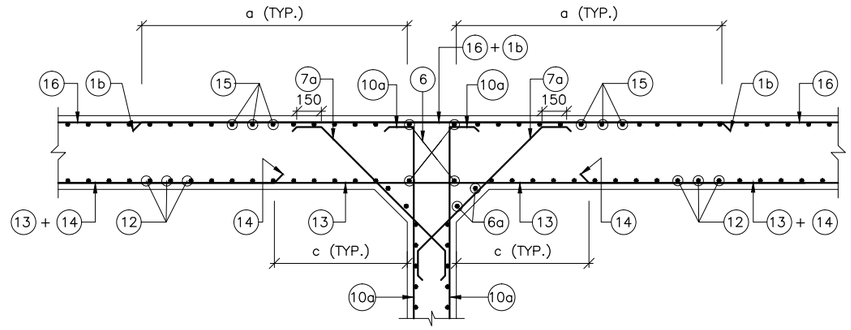

DETAIL AT 'B'
(SCALE 1:25)

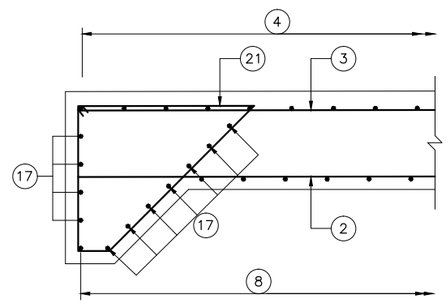

DETAIL AT 'C'
(SCALE 1:25)

EMPLOYER	PROJECT	DESIGN CONSULTANT					
Government of Nepal Ministry of Physical Infrastructure and Transport, Department of Roads, Foreign Co-operation Branch	Nepal India Regional Trade and Transport Project (NIRTTP) (IDA CREDIT No. 5273 - NEP) Detailed Design of Kathmandu (Nagdhunga) - Naubise - Mugling Road and Bridges	Intercontinental Consultants & Technocrats Pvt.Ltd, A-8, Green Park, New Delhi - 110016 Ph : 4086-3000, Fax 2685-5252 In Joint Venture With Soosung Engineering Co. Ltd., South Korea	In Association With Full Bright Consultancy (Pvt.) Ltd. 316,Baburam Acharya Sadak, Sinamangal, Kathmandu, GPO Box: 4970, Kathmandu, Nepal	Prepared By	M.L.GUPTA	DRAWING TITLE: REINFORCEMENT DETAILS OF TWO CELL RCC BOX AT CH: 19+525KM PACKAGE-II (NAUBISE-GALCHI)	Scale: As Shown
				Designed By	NISHTHA S.		Date: JUNE-2018
				Checked By	P.K.KHAN	Drawing No.: NIRTTP/NAG-MUG/MACHHED/REINF-01	(SHEET 2 OF 3)
				Approved By	B.N.SINGH		

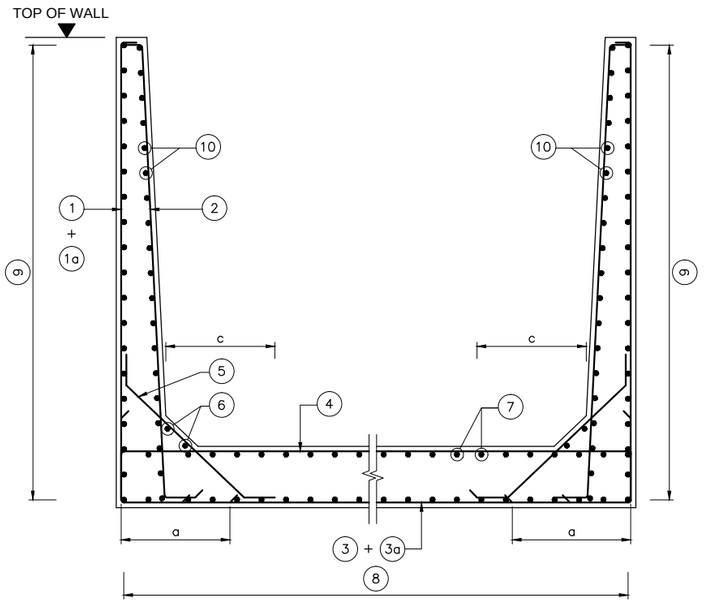

REINFORCEMENT DETAIL FOR U TYPE TROUGH AS MEDIAN WALL

(SCALE 1:40)

REINFORCEMENT SCHEDULE

BAR MKD.	DESCRIPTION	SHAPE
1	25 ϕ @ 180 c/c	
1a	25 ϕ @ 180 c/c	
2	16 ϕ @ 200 c/c	
3	25 ϕ @ 150 c/c	
3a	20 ϕ @ 150 c/c	
4	12 ϕ @ 100 c/c	
5	12 ϕ @ 100 c/c	150 150
6	12 ϕ 2x2 NOS.	
7	12 ϕ @ 100 c/c	
8	12 ϕ @ 100 c/c	
9	16 ϕ @ 200 c/c	
10	16 ϕ @ 200 c/c	

a = 0.3A OR lb, WHICHEVER IS GREATER
b = 0.3B OR lb, WHICHEVER IS GREATER
c = 0.15A

A = CLEAR SPAN
B = CLEAR HEIGHT

EMPLOYER	PROJECT	DESIGN CONSULTANT					
Government of Nepal Ministry of Physical Infrastructure and Transport, Department of Roads, Foreign Co-operation Branch	Nepal India Regional Trade and Transport Project (NIRTTP) (IDA CREDIT No. 5273 - NEP) Detailed Design of Kathmandu (Nagdhunga) - Naubise - Mugling Road and Bridges	Intercontinental Consultants & Technocrats Pvt.Ltd, A-8, Green Park, New Delhi - 110016 Ph : 4086-3000, Fax 2685-5252 In Joint Venture With Soosung Engineering Co. Ltd., South Korea	In Association With Full Bright Consultancy (Pvt.) Ltd. 316,Baburam Acharya Sadak, Sinamangal, Kathmandu, GPO Box: 4970, Kathmandu, Nepal	Prepared By	M.L.GUPTA	DRAWING TITLE: REINFORCEMENT DETAILS OF TWO CELL RCC BOX AT CH: 19+525KM PACKAGE-II (NAUBISE-GALCHI)	Scale: As Shown Date: JUNE-2018
				Designed By	NISHTHA S.		
				Checked By	P.K.KHAN	Drawing No.: NIRTTP/NAG-MUG/MACHHED/REINF-01	(SHEET 3 OF 3)
				Approved By	B.N.SINGH		

GARDO KHOLA BRIDGE

CHAINAGE : 23+185

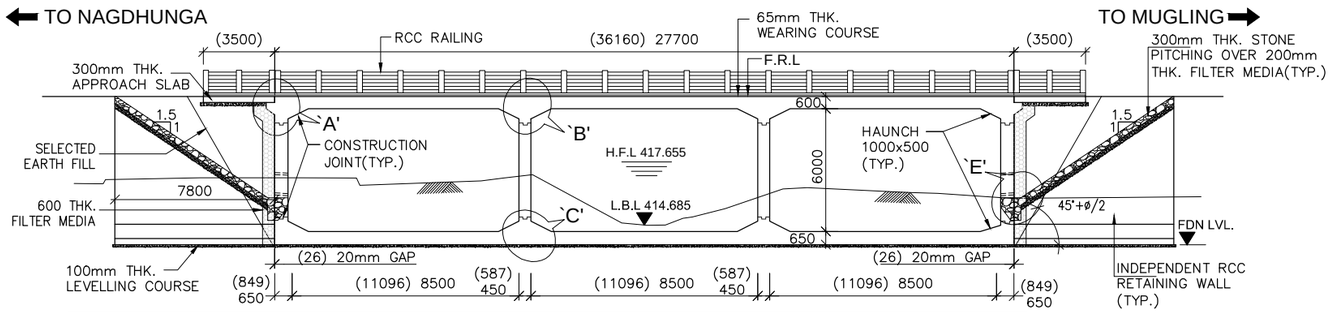

FINISH ROAD LEVEL (m)	420.938	420.938	420.938	420.938	
GROUND LEVEL (m)	417.013	417.013	416.237	416.028	
FOUNDING LEVEL (m)	413.730	413.730	413.730	413.730	
CHAINAGE(m)	(−)13.850	(−)4.475	0.000	4.475	13.850

CHAINAGE AT 0.000m IS 23+185 Km

DIMENSION GIVEN IN BRACKET ARE ALONG SKEW DIMENSIONS

LONGITUDINAL ELEVATION OF PROPOSED BRIDGE

(SCALE 1:200)

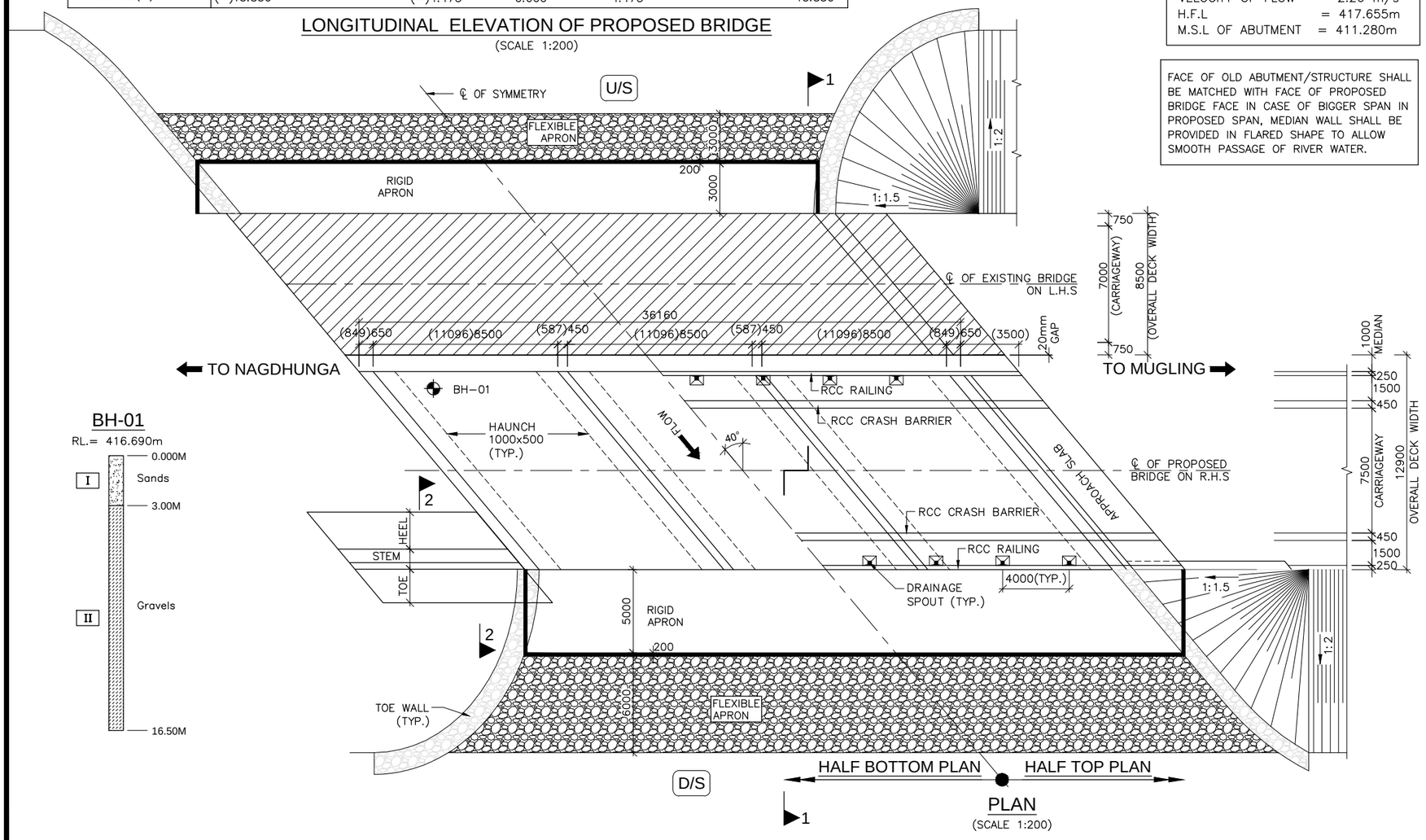

PLAN

(SCALE 1:200)

MISCELLANEOUS DRAWINGS:

1. DETAILS OF APPROACH SLAB:
   −NIRTTP/NAG−MUG/PACKAGE−II/MISC.−01(a)
2. DETAILS OF DRAINAGE SPOUT & WEARING COAT:
   −NIRTTP/NAG−MUG/PACKAGE−II/MISC.−02
3. DIMENSIONAL & REINF. DETAILS OF R.C.C CRASH BARRIER:
   −NIRTTP/NAG−MUG/PACKAGE−II/MISC.−03
4. DIMENSIONAL & REINF. DETAILS OF R.C.C RAILING:
   −NIRTTP/NAG−MUG/PACKAGE−II/MISC.−04
5. DIMENSIONAL AND REINFORCEMENT DETAILS OF RCC RETAINING WALL/MEDIAN WALL:
   −NIRTTP/NAG−MUG/PACKAGE−II/MISC.−05

REFERENCE DRAWINGS:-

1. REINFORCEMENT DETAILS OF RCC BOX:
   − NIRTTP/NAG−MUG/GARDO/REINF−01 (SHEET 1 & 2)

HYDRAULIC DATA:

DISCHARGE	= 80 cumec
VELOCITY OF FLOW	= 2.26 m/s
H.F.L	= 417.655m
M.S.L OF ABUTMENT	= 411.280m

FACE OF OLD ABUTMENT/STRUCTURE SHALL BE MATCHED WITH FACE OF PROPOSED BRIDGE FACE IN CASE OF BIGGER SPAN IN PROPOSED SPAN, MEDIAN WALL SHALL BE PROVIDED IN FLARED SHAPE TO ALLOW SMOOTH PASSAGE OF RIVER WATER.

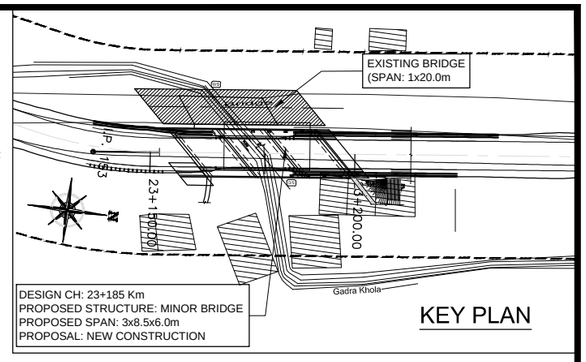

KEY PLAN

NOTES:-

1. ALL DIMENSIONS ARE IN MILLIMETER AND LEVELS IN METER UNLESS OTHERWISE SPECIFIED.
2. DIMENSIONS ARE NOT TO BE SCALED, ONLY WRITTEN DIMENSIONS SHALL BE FOLLOWED.
3. THE BRIDGE HAS BEEN DESIGNED FOR MOST SEVERE OF:
   (i) ONE LANE OF IRC CLASS 70R LOADING OR TWO LANES OF IRC CLASS A LOADING WHEN FOOTPATHS ARE IN POSITION.
   (ii) ONE LANE OF IRC CLASS 70R LOADING +ONE LANE OF IRC CLASS A LOADING OR 3 LANES OF IRC CLASS A LOADING WHEN FOOTPATHS ARE REMOVED.
   (iii) ONE LANE OF SV LOADING IN ACCORDANCE WITH CLAUSE 204.5 OF IRC−6:2017.
4. MINIMUM CONCRETE COVER, GRADE OF CONCRETE, MINIMUM CEMENT CONTENT & MAXIMUM W/C RATIO SHALL BE AS PER 'MODERATE' CONDITION OF EXPOSURE.
5. CONCRETE SHALL BE DESIGN MIX WITH A MINIMUM 28 DAYS CHARACTERISTIC STRENGTH ON 150mm CUBES AS FOLLOWS :−
   a. LEVELING COURSE (UNDER FOUNDATION) − M10
   b. LEVELING COURSE (UNDER APPROACH SLAB) − M15
   c. BOX STRUCTURE − M30
   d. RETURN/RETAINING WALL − M30
   e. CRASH BARRIER − M40
   f. APPROACH SLAB − M30
6. UNTENSIONED REINFORCEMENT SHALL BE THERMO MECHANICALLY TREATED, (TMT) HIGH YIELD STRENGTH DEFORMED BARS OF GRADE DESIGNATION Fe−500D CONFORMING TO IS: 1786.
7. 65mm THK. WEARING COURSE COMPRISING OF 40mm THICK ASPHALTIC CONCRETE OVERLAID WITH 25mm THICK MASTIC ASPHALT SHALL BE PROVIDED AS PER SECTION 500 OF MORT&H SPECIFICATION.
8. 100mm DIA WEEP HOLES AT 1000mm C/C STAGGERED HORIZONTALLY AND VERTICALLY SHALL BE PROVIDED IN ONE OR TWO LAYERS ABOVE G.L IN VERTICAL WALLS OF BOX RETURN/RETAINING WALLS AT A SLOPE OF 1 VERTICAL TO 20 HORIZONTAL TOWARDS THE DRAINING FACE.
9. WATER TO BE USED IN CONCRETING, & CURING SHALL CONFORM TO CLAUSE 18.4.5 OF IRC:112−2011.
10. LAYING, COMPACTION AND EXTENT OF BACKFILL BEHIND BOX AND RETURN/RETAINING WALLS SHALL CONSIST OF SELECTED EARTH CONFORMING TO APPENDIX:6 OF IRC:78−2014 HAVING PROPERTIES C=0, ø= 35°, δ =22.5° & γd = 20 KN/m³.
11. MINIMUM CLEAR COVER TO OUTER MOST STEEL SHALL BE AS UNDER:−
    (i) EARTH FACE − 75mm
    (ii) NON EARTH FACE − 50mm
12. THE BRIDGE IS DESIGNED FOR PROVISION OF SEISMIC ZONE V AS PER CLAUSE 219 OF IRC:6:2017.
13. SAFE BEARING CAPACITY CONSIDERED IN DESIGN AT PROPOSED FOUNDING LEVEL IS 32T/m². THIS SHALL BE ASCERTAINED BEFORE EXECUTION AT SITE.
14. FILTER MEDIA SHALL BE PROVIDED AS PER APPENDIX−6 OF IRC−78:2014.
15. MINIMUM ANCHORAGE OF FOUNDATION IN SOFT ROCK SHALL BE 1.5m AND 0.6m IN HARD ROCK.
16. WHERE FOUNDATION ARE PLACED ON ROCK, TRENCHES AROUND THE FOOTING SHALL BE FILLED UP WITH CONCRETE OF M15 GRADE UP TO TOP OF ROCK.
17. THIS DRAWING SHOULD BE READ IN CONJUNCTION WITH RELEVANT HIGHWAY PLAN AND PROFILE DRAWINGS.
18. ALL CHAINAGES, FRL, G.L SHALL BE CONFIRMED AT SITE PRIOR TO EXECUTION.
19. FOR APPROACH SLAB, DRAINAGE SPOUTS, CRASH BARRIER, PROTECTION WORK, RETAINING WALL DETAILS, REFER SEPARATE DRAWINGS.
20. MINIMUM LONGITUDINAL GRADIENT OF 0.3% SHALL BE PROVIDED IS PROPOSED BRIDGE TO FACILITATE DRAINAGE OF DECK AS PER CLAUSE 105.3.6 OF IRC−5.
21. SIZE OF EACH INDIVIDUAL STONE PITCHING AND LAUNCHING APRON SHALL NOT BE LESS THAN 30CM IN DIAMETER AND 40KG IN WEIGHT OR AS PER TABLE 5.1 & 5.2 OF IRC:89−1997. WHERE THE REQUIRED SIZE STONES ARE NOT ECONOMICALLY AVAILABLE, STONES IN WIRE CRATES MAY BE USED IN PLACE OF ISOLATED STONES OF EQUIVALENT WEIGHT.

EMPLOYER	PROJECT	DESIGN CONSULTANT				
Government of Nepal Ministry of Physical Infrastructure and Transport, Department of Roads, Foreign Co-operation Branch	Nepal India Regional Trade and Transport Project (NIRTTP) (IDA CREDIT No. 5273 - NEP) Detailed Design of Kathmandu (Nagdhunga) - Naubise - Mugling Road and Bridges	Intercontinental Consultants & Technocrats Pvt.Ltd, A-8, Green Park, New Delhi - 110016 Ph : 4086-3000, Fax 2685-5252 In Joint Venture With Soosung Engineering Co. Ltd., South Korea	In Association With Full Bright Consultancy (Pvt.) Ltd. 316,Baburam Acharya Sadak, Sinamangal, Kathmandu, GPO Box: 4970, Kathmandu, Nepal	Prepared By	M.L.GUPTA	DRAWING TITLE: GENERAL ARRANGEMENT DRAWING FOR MINOR BRIDGE AT CH. 23+185KM OVER GARDO KHOLA (3x8.5x6.0m) PACKAGE-II (GALCHI-BENIGHAT)
				Designed By	NEELAM N.	
				Checked By	P.K.KHAN	
				Approved By	B.N.SINGH	Drawing No.: NRTTP/NAG-MUG/GARDO/GAD

Scale: As Shown

Date: JUNE-2018

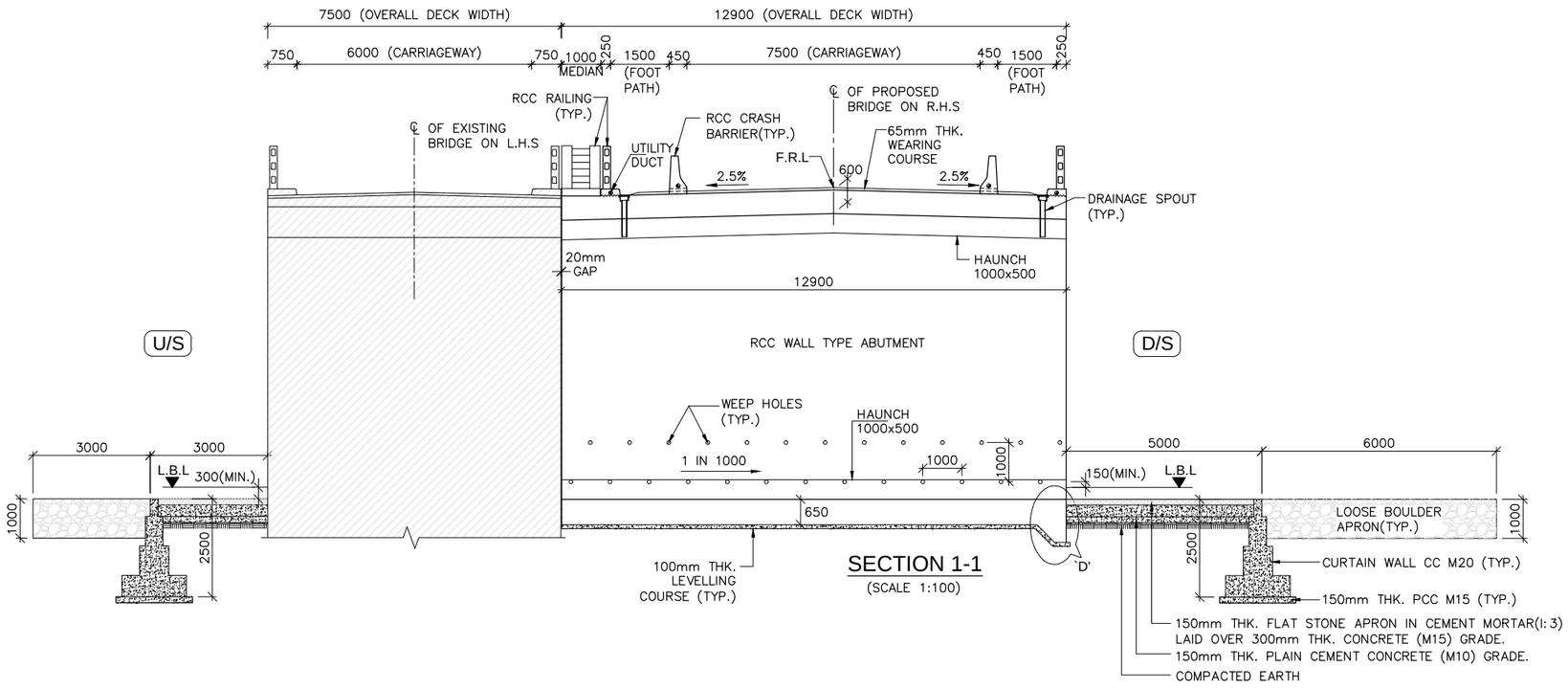

SECTION 1-1

(SCALE 1:100)

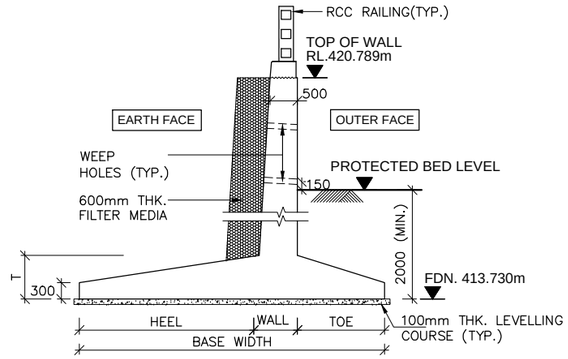

SECTION 2-2

(SCALE 1:75)

REFER SEPARATE DRAWING FOR DETAILS

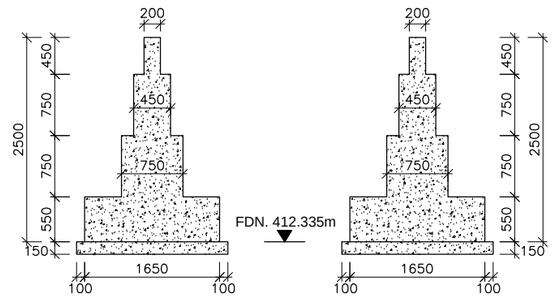

AT DOWNSTREAM AT UPSTREAM

TYPICAL CROSS SECTION OF CURTAIN WALL

(SCALE 1:50)

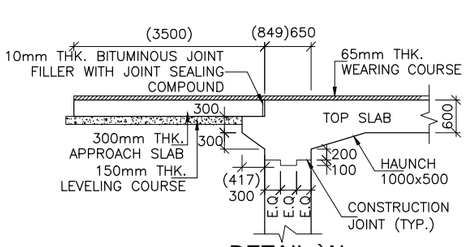

DETAIL-`A'

(SCALE 1:75)

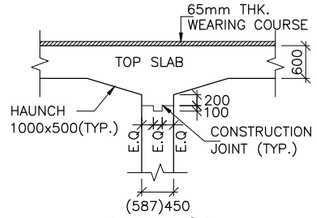

DETAIL-`B'

(SCALE 1:75)

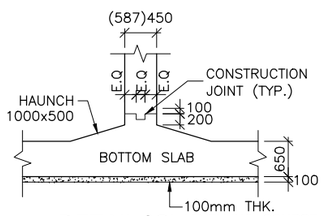

DETAIL-`C'

(SCALE 1:75)

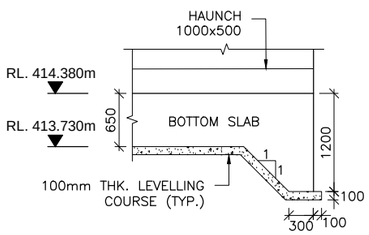

DETAIL-`D'

(SCALE 1:50)

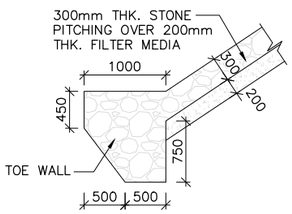

DETAIL-`E'

SCALE–1:50

LEGEND:

F.R.L	:	FINISHED ROAD LEVEL
H.F.L	:	HIGH FLOOD LEVEL
℄	:	CENTER LINE
LVL.	:	LEVEL
TYP.	:	TYPICAL
THK.	:	THICK
D/S	:	DOWNSTREAM
U/S	:	UPSTREAM
G.L	:	GROUND LEVEL
L.B.L	:	LOWEST BED LEVEL
FDN.	:	FOUNDING LEVEL
M.S.L	:	MAXIMUM SCOUR LEVEL
BH	:	BORE HOLE
EQ.	:	EQUAL
RCC	:	REINFORCED CEMENT CONCRETE
PCC	:	PLAIN CEMENT CONCRETE
CC	:	CEMENT CONCRETE
CONC.	:	CONCRETE
RL.	:	REDUCED LEVEL
EXISTING	:	
PROPOSED	:	

EMPLOYER	PROJECT	DESIGN CONSULTANT					
Government of Nepal Ministry of Physical Infrastructure and Transport, Department of Roads, Foreign Co-operation Branch	Nepal India Regional Trade and Transport Project (NIRTTP) (IDA CREDIT No. 5273 - NEP) Detailed Design of Kathmandu (Nagdhunga) - Naubise - Mugling Road and Bridges	Intercontinental Consultants & Technocrats Pvt.Ltd, A-8, Green Park, New Delhi - 110016 Ph : 4086-3000, Fax 2685-5252 In Joint Venture With Soosung Engineering Co. Ltd., South Korea	In Association With Full Bright Consultancy (Pvt.) Ltd. 316,Baburam Acharya Sadak, Sinamangal, Kathmandu, GPO Box: 4970, Kathmandu, Nepal	Prepared By	M.L.GUPTA	DRAWING TITLE: GENERAL ARRANGEMENT DRAWING FOR MINOR BRIDGE THREE CELL RCC BOX AT CH: 23+185KM OVER GARDO KHOLA (3/8.5mx6.0m) PACKAGE-II (GALCHI-BENIGHAT)	Scale: As Shown	Date: JUNE-2018
				Designed By	NEELAM N.			
				Checked By	P.K.KHAN			
				Approved By	B.N.SINGH	Drawing No.: NRTTP/NAG-MUG/GARDO/GAD		

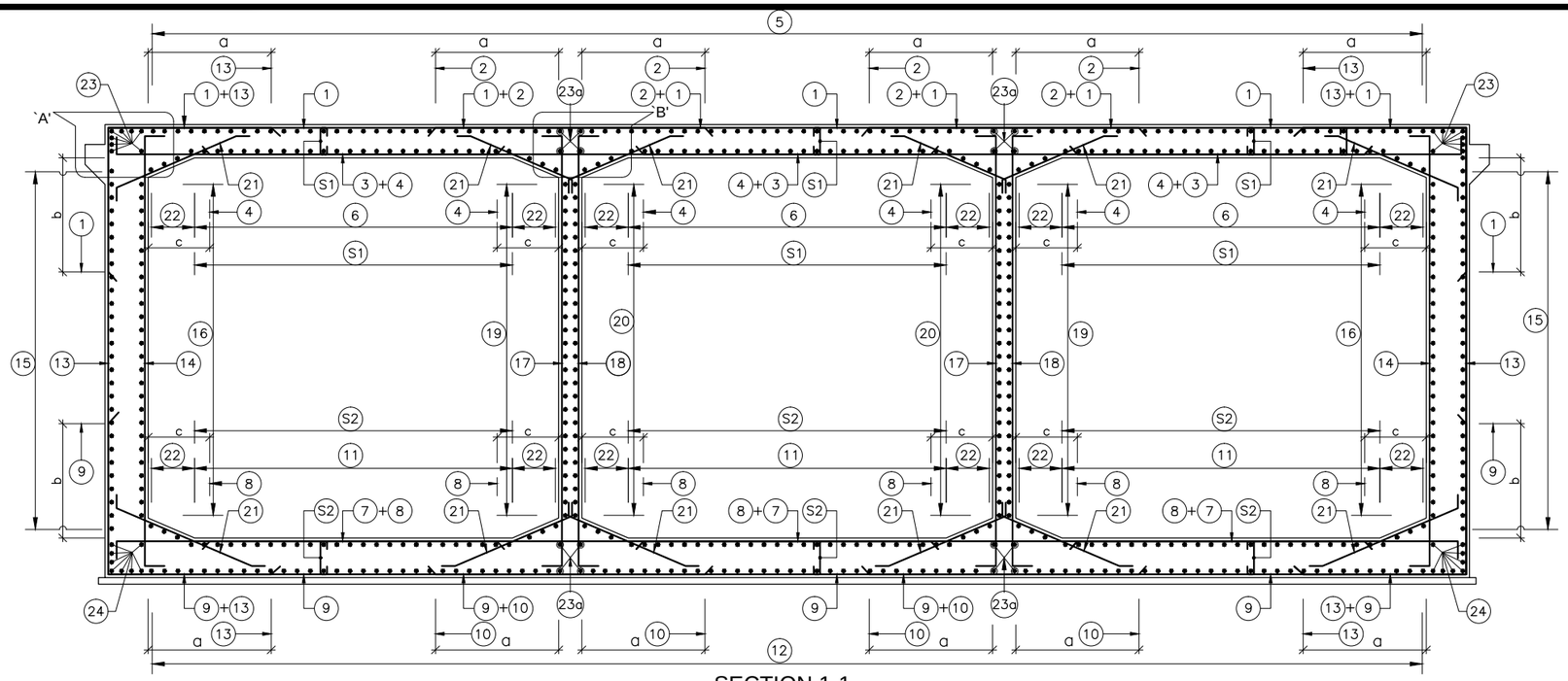

SECTION 1-1

(SCALE=1:60)

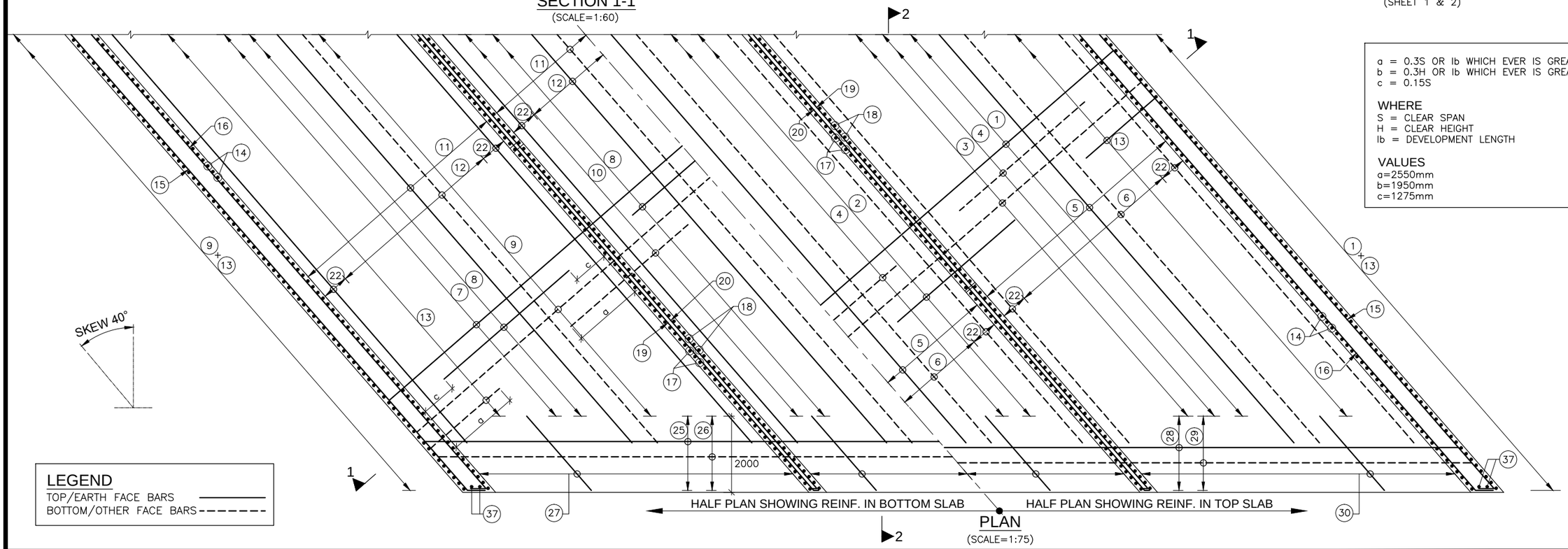

PLAN

(SCALE=1:75)

a = 0.3S OR lb WHICH EVER IS GREATER
b = 0.3H OR lb WHICH EVER IS GREATER
c = 0.15S

WHERE
S = CLEAR SPAN
H = CLEAR HEIGHT
lb = DEVELOPMENT LENGTH

VALUES
a=2550mm
b=1950mm
c=1275mm

LEGEND
TOP/EARTH FACE BARS
BOTTOM/OTHER FACE BARS

NOTES:-

1. ALL DIMENSIONS ARE IN MILLIMETER UNLESS OTHERWISE MENTIONED. ONLY WRITTEN DIMENSIONS TO BE FOLLOWED. NO DIMENSION SHALL BE SCALED.
2. CONCRETE SHALL BE DESIGN MIX WITH A MINIMUM CHARACTERISTIC STRENGTH OF 30MPa FOR RCC BOX STRUCTURE.
3. CLEAR COVER TO OUTER MOST STEEL SHALL BE AS FOLLOWS:–
   EARTH FACE – 75mm
   OTHER FACE – 50mm
4. THE REINFORCING BARS SHALL BE OF THERMO MECHANICALLY TREATED (GRADE DESIGNATION Fe–500D) CONFORMING TO IS:1786 STANDARDS.
5. LAPPING OF REINFORCEMENT SHALL BE AVOIDED AS FAR AS POSSIBLE. IN CASE LAPPING OF BARS BECOMES UNAVOIDABLE, MINIMUM LAP LENGTH OF REINFORCEMENT BARS SHALL BE CALCULATED AS FOLLOW WITH MAXIMUM ALLOWABLE LAPPING (p) OF 50% ONLY
   (IRC:112–2011) (CLAUSE:15.2.5.1)
   LAP LENGTH ls = α1.lbnet
   α1 = 1.0 FOR p%≤25%
   α1 = 1.15 FOR 25%≤p%≤33%
   α1 = 1.4 FOR 33%≤p%≤50%
   (IRC:112–2011) (CLAUSE:15.2.3.3)
   DEVELOPMENT LENGTH (lbnet)
   lbnet = α.lb (α = 1.0)
   lb = kø
   k = 40 FOR M30 (Fe500D)
   k = 36 FOR M35 (Fe500D)
   k = 34 FOR M40 (Fe500D)
   FOR UNFAVORABLE BOND CONDITION THE lb SHOULD BE MULTIPLIED BY FACTOR OF 1.43.
   FOR ø>32mm lb, SHOULD BE INCREASED BY MULTIPLYING FACTOR $\left(\frac{132-ø}{100}\right)$

REFERENCE DRAWINGS:-

1. GENERAL ARRANGEMENT DRAWING NIRTTP/NAG–MUG/GARDO/23+185/GAD (SHEET 1 & 2)

EMPLOYER	PROJECT	DESIGN CONSULTANT					
Government of Nepal Ministry of Physical Infrastructure and Transport, Department of Roads, Foreign Co-operation Branch	Nepal India Regional Trade and Transport Project (NIRTTP) (IDA CREDIT No. 5273 - NEP) Detailed Design of Kathmandu (Nagdhunga) - Naubise - Mugling Road and Bridges	Intercontinental Consultants & Technocrats Pvt.Ltd, A-8, Green Park, New Delhi - 110016 Ph : 4086-3000, Fax 2685-5252 In Joint Venture With Soosung Engineering Co. Ltd., South Korea	In Association With Full Bright Consultancy (Pvt.) Ltd. 316,Baburam Acharya Sadak, Sinamangal, Kathmandu, GPO Box: 4970, Kathmandu, Nepal	Prepared By		M.L.GUPTA	DRAWING TITLE: REINFORCEMENT DETAILS OF THREE CELL RCC BOX AT CH: 23+185KM OVER GARDO KHOLA (3/8.5mx6.0m) PACKAGE-II (GALCHI-BENIGHAT)	Scale: As Shown	Date: JUNE-2018
				Designed By		NEELAM N.			(SHEET 1 OF 2)
				Checked By		P.K.KHAN			
				Approved By		B.N.SINGH	Drawing No.: NIRTTP/NAG-MUG/GARDO/GAD		

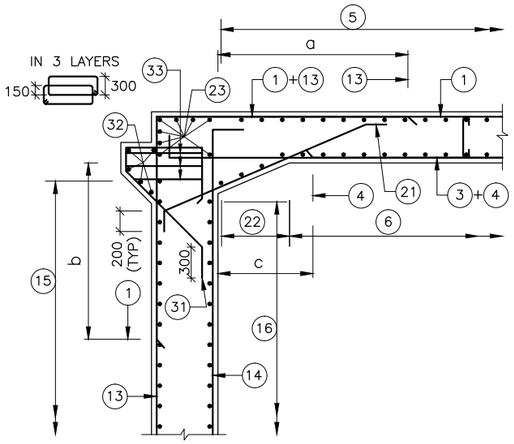

DETAIL-`A'
(SCALE=1:40)

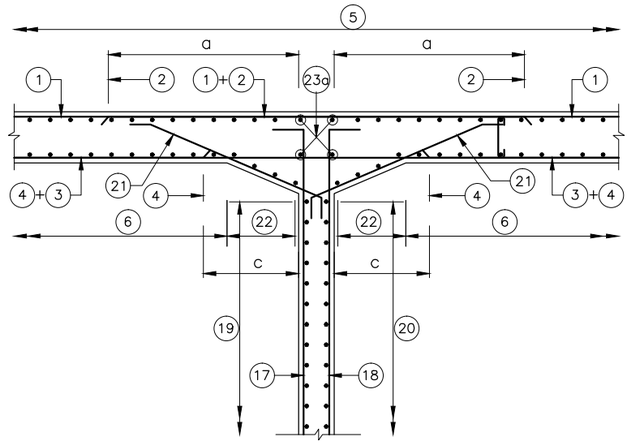

DETAIL-`B'
(SCALE=1:40)

LEGEND

TOP/EARTH FACE BARS ————
BOTTOM/OTHER FACE BARS - - - - -

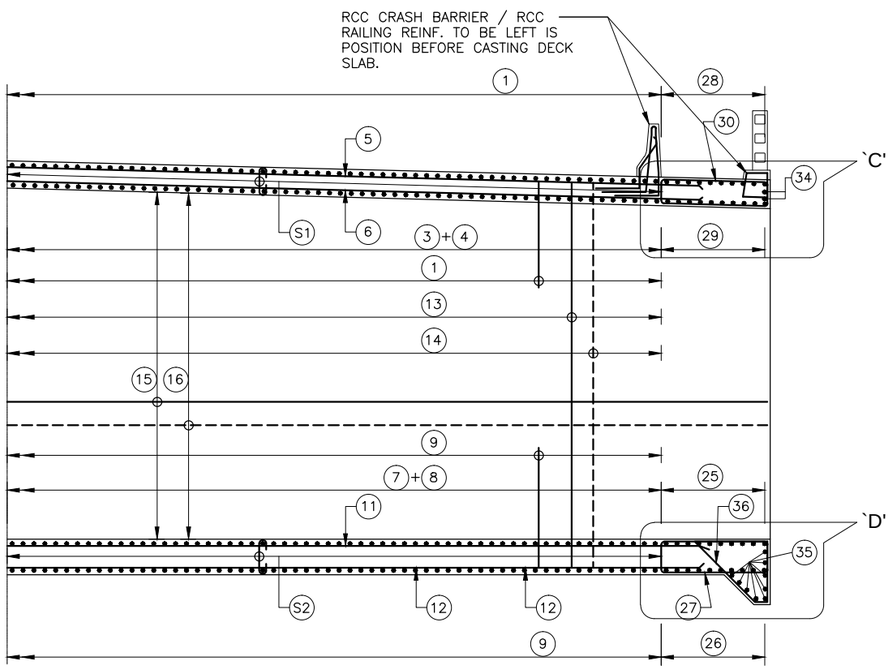

SECTION 2-2
(SCALE=1:75)

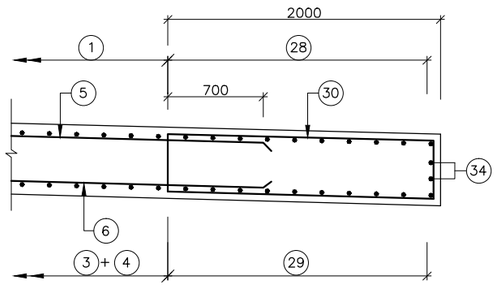

DETAIL-`C'
(SCALE=1:30)

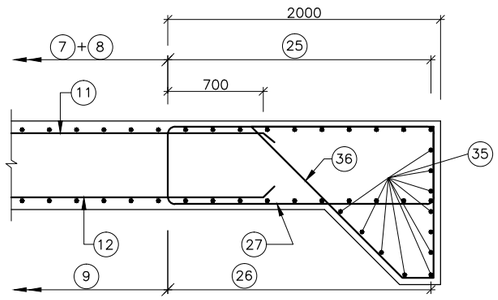

DETAIL-`D'
(SCALE=1:30)

REINFORCEMENT SCHEDULE

BAR MARKS	DESCRIPTION	SHAPE
1	16 ϕ @180c/c	
2	16 ϕ @180c/c	
3	12 ϕ @180c/c	
4	16 ϕ @180c/c	
5	12 ϕ @180c/c	
6	12 ϕ @180c/c	
7	16 ϕ @180c/c	
8	16 ϕ @180c/c	
9	25 ϕ @180c/c	
10	12 ϕ @180c/c	
11	16 ϕ @150c/c	
12	16 ϕ @150c/c	
13	20 ϕ @180c/c	
14	25 ϕ @180c/c	
15	16 ϕ @150c/c	
16	15 ϕ @150c/c	
17	16 ϕ @180c/c	
18	16 ϕ @180c/c	
19	12 ϕ @180c/c	
20	12 ϕ @180c/c	
21	12 ϕ @180c/c	
22	12 ϕ −12x4 NOS.	
23	12 ϕ −8x2 Nos.	
23a	12 ϕ −4x4 Nos.	
24	12 ϕ −8x2 Nos.	
25	25 ϕ @180c/c	
26	25 ϕ @180c/c	
27	16 ϕ @150c/c	
28	25 ϕ @180c/c	
29	25 ϕ @180c/c	
30	16 ϕ @180c/c	
31	12 ϕ @180c/c	
32	12 ϕ −5 Nos.	
33	2L−ϕ10 STRPS.	
34	10 ϕ −2 Nos.	EACH FACE
35	12 ϕ −12 Nos.	
36	12 ϕ @150c/c	
37	10 ϕ −2 Nos.	EACH FACE
S1	10 ϕ LINK @180c/c LONGITUDINAL DIRECTION & @150c/c TRANSVERSE DIRECTION	
S2	12 ϕ LINK @180c/c LONGITUDINAL DIRECTION & @150c/c TRANSVERSE DIRECTION	

EMPLOYER	PROJECT	DESIGN CONSULTANT				
Government of Nepal Ministry of Physical Infrastructure and Transport, Department of Roads, Foreign Co-operation Branch	Nepal India Regional Trade and Transport Project (NIRTTP) (IDA CREDIT No. 5273 - NEP) Detailed Design of Kathmandu (Nagdhunga) - Naubise - Mugling Road and Bridges	Intercontinental Consultants & Technocrats Pvt.Ltd, A-8, Green Park, New Delhi - 110016 Ph : 4086-3000, Fax 2685-5252 In Joint Venture With Soosung Engineering Co. Ltd., South Korea	In Association With Full Bright Consultancy (Pvt.) Ltd. 316,Baburam Acharya Sadak, Sinamangal, Kathmandu, GPO Box: 4970, Kathmandu, Nepal	Prepared By	M.L.GUPTA	DRAWING TITLE: REINFORCEMENT DETAILS OF THREE CELL RCC BOX AT CH: 23+185KM OVER GARDO KHOLA (3/8.5mx6.0m) PACKAGE-II (GALCHI-BENIGHAT)
				Designed By	NEELAM N.	
				Checked By	P.K.KHAN	Drawing No.: NIRTTP/NAG-MUG/GARDO/GAD
				Approved By	B.N.SINGH	

Scale: As Shown
Date: JUNE-2018
(SHEET 2 OF 2)

MISCELLANEOUS DRAWINGS

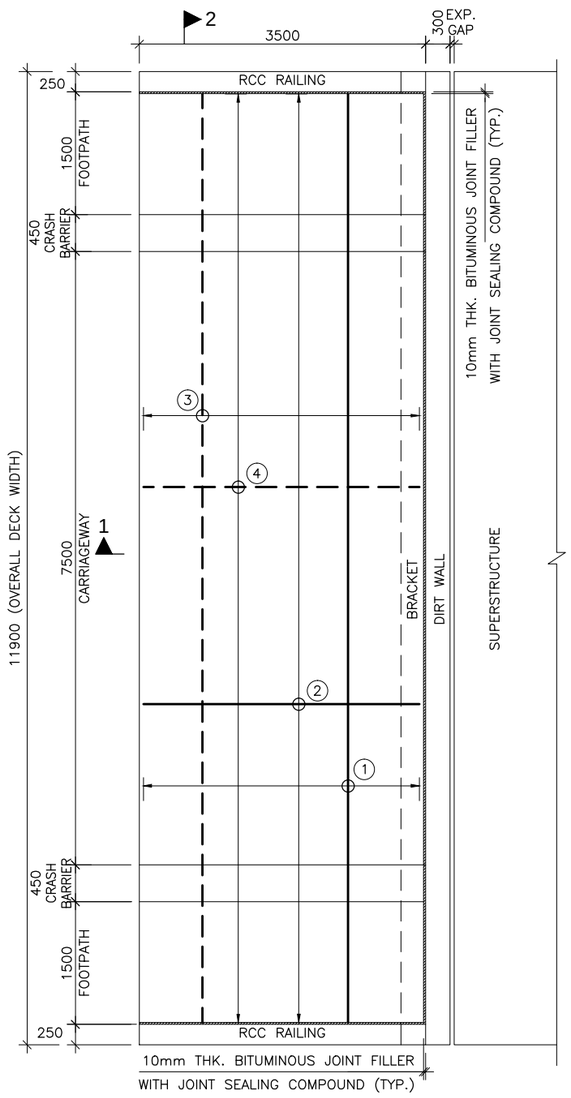

PLAN
(SCALE 1:50)

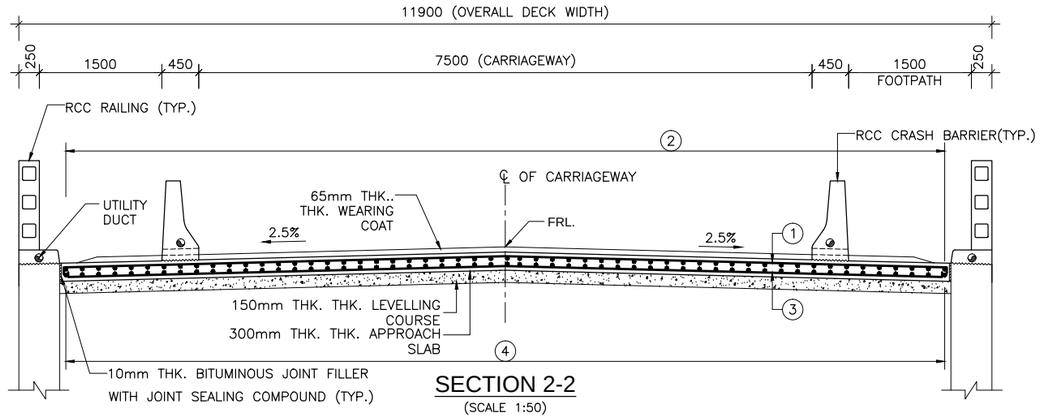

SECTION 2-2
(SCALE 1:50)

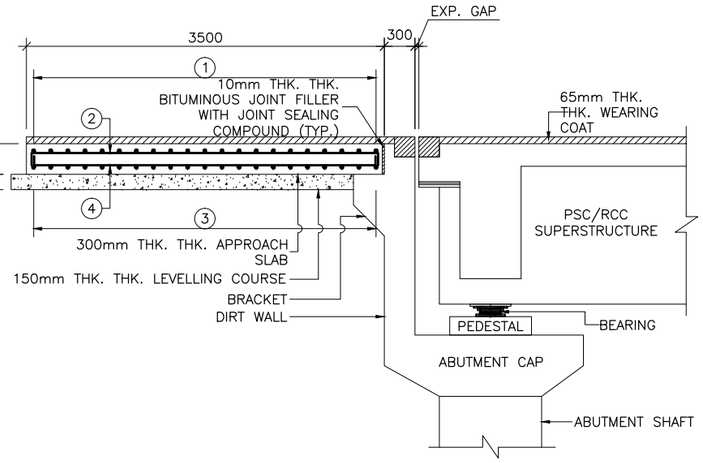

SECTION 1-1
(FOR PSC/RCC SUPERSTRUCTURE)
(SCALE 1:40)

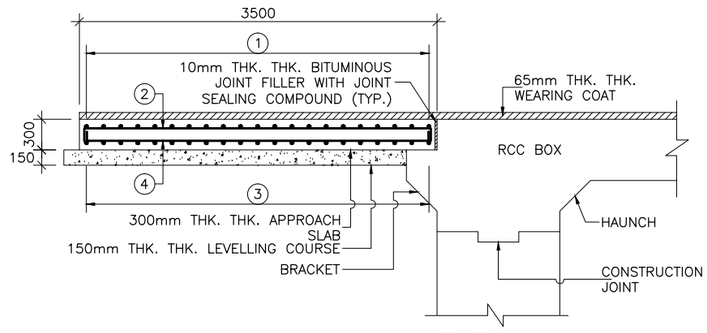

SECTION 1-1
(FOR RCC BOX TYPE STRUCTURE)
(SCALE 1:40)

NOTES:-

1. ALL DIMENSIONS ARE IN MILLIMETER UNLESS OTHERWISE MENTIONED. ONLY WRITTEN DIMENSIONS ARE TO BE FOLLOWED. NO DIMENSION IS TO BE SCALED.
2. CONCRETE GRADE SHALL BE DESIGN MIX WITH A MINIMUM 28 DAYS CHARACTERISTIC STRENGTH ON 150mm THK. CUBES AS FOLLOWS :–
   a. APPROACH SLAB – 30 MPa
   b. LEVELLING COURSE – 15 MPa
3. THE REINFORCING BARS SHALL BE OF THERMO MECHANICALLY TREATED (TMT) HYSD BARS (GRADE DESIGNATION Fe–500D). CONFORMING TO IS:1786 STANDARDS.
4. CLEAR COVER TO OUTER MOST STEEL SHALL BE AS 50mm THK..
5. 65mm THK. THK. WEARING COAT COMPRISING OF 40mm THK. THK. ASPHALTIC CONCRETE OVER LAID WITH 25mm THK. THK. MASTIC ASPHALT SHALL BE PROVIDED AS PER SECTION 500 OF MORTH SPECIFICATIONS.
6. FILLING BEHIND THE ABUTMENT AND PROPER COMPACTION OF THE EMBANKMENT BELOW THE APPROACH SLAB SHOULD BE CARRIED OUT BY THE CONTRACTOR WITH SELECTED MATERIAL AS PER THE SPECIFICATIONS GIVEN IN APPENDIX:6 OF IRC:78 (2014). HAVING SOIL PARAMETERS AS MENTIONED IN RESPECTIVE GADS OF BRIDGES.
7. FOR REINFORCEMENT DETAILS OF RCC BRACKET SUPPORTING APPROACH SLAB REFER SEPARATE ABUTMENT DRAWINGS.
8. THIS DRAWING SHALL BE READ IN CONJUNCTION WITH THE GENERAL ARRANGEMENT DRAWING OF THE RESPECTIVE BRIDGES.

S.NO.	TYPE OF STRUCTURE	CHAINAGE
1	MINOR BRIDGE	25+025
2	MINOR BRIDGE	26+563
3	MINOR BRIDGE	33+250
4	MINOR BRIDGE	36+449
5	MINOR BRIDGE	38+620
6	MINOR BRIDGE	50+165

REINFORCEMENT SCHEDULE

BAR MARK	DESCRIPTION	SHAPE	REMARKS
1	12 ϕ@150c/c		
2	12 ϕ@150c/c		
3	12 ϕ@150c/c		
4	12 ϕ@150c/c		

LEGEND:

BOTTOM REINF. – – – – –
TOP REINF.REINF. ————

EMPLOYER	PROJECT	DESIGN CONSULTANT					
Government of Nepal Ministry of Physical Infrastructure and Transport, Department of Roads, Foreign Co-operation Branch	Nepal India Regional Trade and Transport Project (NIRTTP) (IDA CREDIT No. 5273 - NEP) Detailed Design of Kathmandu (Nagdhunga) - Naubise - Mugling Road and Bridges	Intercontinental Consultants & Technocrats Pvt.Ltd, A-8, Green Park, New Delhi - 110016 Ph : 4086-3000, Fax 2685-5252 In Joint Venture With Soosung Engineering Co. Ltd., South Korea	In Association With Full Bright Consultancy (Pvt.) Ltd. 316,Baburam Acharya Sadak, Sinamangal, Kathmandu, GPO Box: 4970, Kathmandu, Nepal	Prepared By		K.M.JOHRI	DRAWING TITLE: DETAILS OF APPROACH SLAB PACKAGE-II (NAUBISE-GALCHI)
				Designed By		AGNIMITA	
				Checked By		P.K.KHAN	
				Approved By		B.N.SINGH	Drawing No.: NIRTTP/NAG-MUG/PACKAGE-II/MISC.-01

Scale: As Shown
Date: JUNE-2018

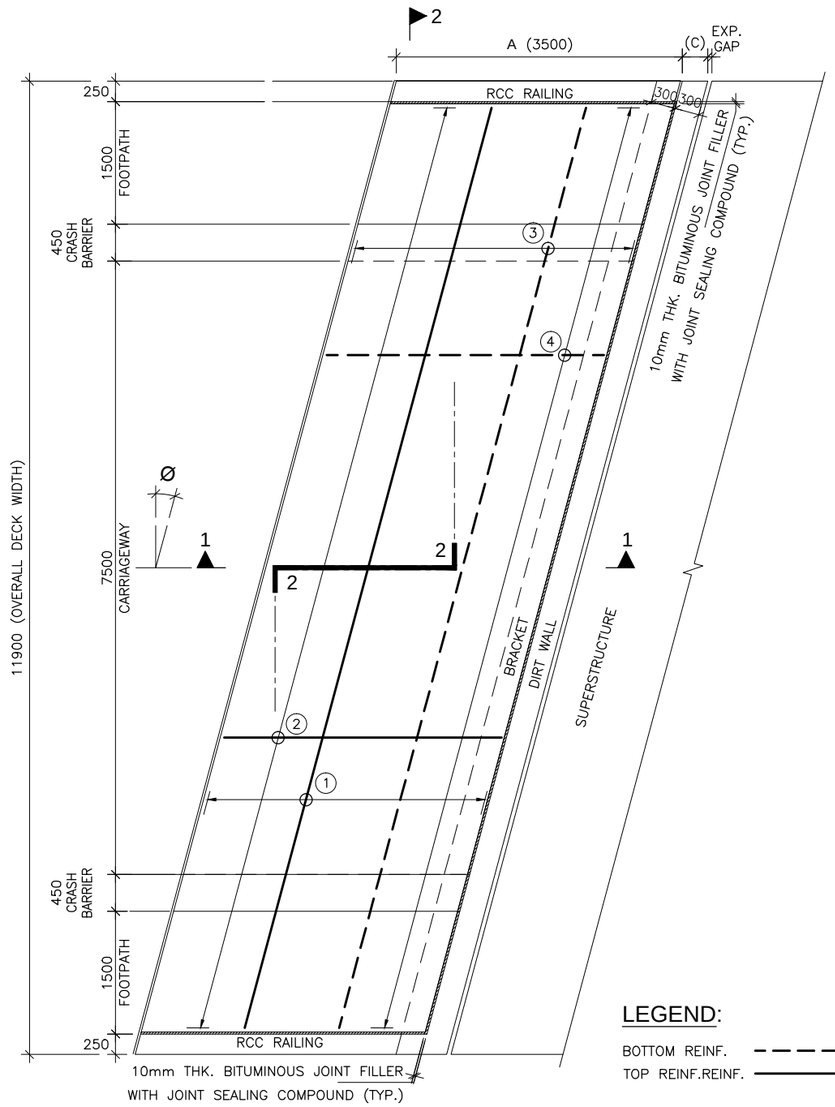

PLAN
(SCALE 1:50)

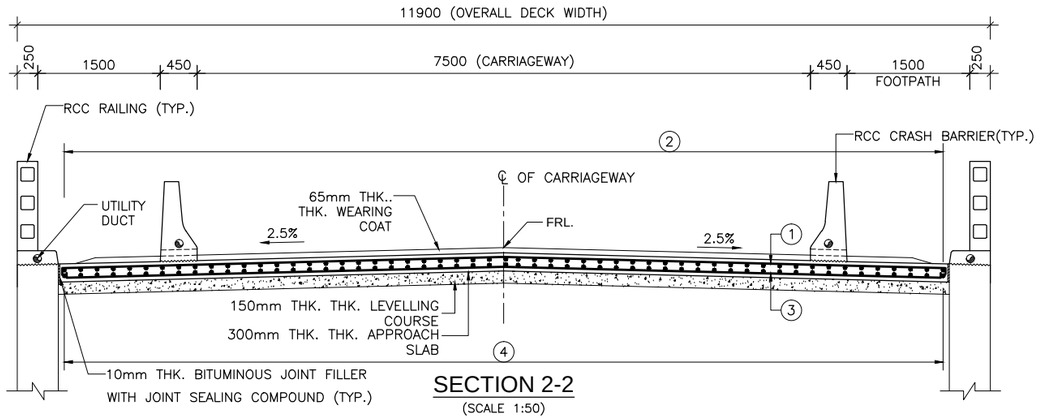

SECTION 2-2
(SCALE 1:50)

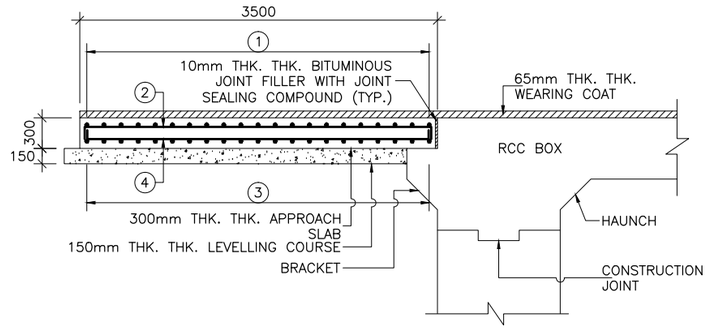

SECTION 1-1
(FOR RCC BOX TYPE STRUCTURE)
(SCALE 1:40)

REINFORCEMENT SCHEDULE

BAR MARK	DESCRIPTION	SHAPE	REMARKS
1	12 ϕ@150c/c		
2	12 ϕ@150c/c		
3	12 ϕ@150c/c		
4	12 ϕ@150c/c		

LEGEND:

BOTTOM REINF. — — — —
TOP REINF.REINF. ————

S.NO.	CHAINAGE	SKEW ANGLE	A	(B)	(C)
1	23+178	40° (RIGHT)	3500	11900	300

NOTES:-

1. ALL DIMENSIONS ARE IN MILLIMETER UNLESS OTHERWISE MENTIONED. ONLY WRITTEN DIMENSIONS ARE TO BE FOLLOWED. NO DIMENSION IS TO BE SCALED.
2. CONCRETE GRADE SHALL BE DESIGN MIX WITH A MINIMUM 28 DAYS CHARACTERISTIC STRENGTH ON 150mm THK. CUBES AS FOLLOWS :–
   a. APPROACH SLAB – 30 MPa
   b. LEVELLING COURSE – 15 MPa
3. THE REINFORCING BARS SHALL BE OF THERMO MECHANICALLY TREATED (TMT) HYSD BARS (GRADE DESIGNATION Fe–500D). CONFORMING TO IS:1786 STANDARDS.
4. CLEAR COVER TO OUTER MOST STEEL SHALL BE AS 50mm THK..
5. 65mm THK. THK. WEARING COAT COMPRISING OF 40mm THK. THK. ASPHALTIC CONCRETE OVER LAID WITH 25mm THK. THK. MASTIC ASPHALT SHALL BE PROVIDED AS PER SECTION 500 OF MORTH SPECIFICATIONS.
6. FILLING BEHIND THE ABUTMENT AND PROPER COMPACTION OF THE EMBANKMENT BELOW THE APPROACH SLAB SHOULD BE CARRIED OUT BY THE CONTRACTOR WITH SELECTED MATERIAL AS PER THE SPECIFICATIONS GIVEN IN APPENDIX:6 OF IRC:78 (2014). HAVING SOIL PARAMETERS AS MENTIONED IN RESPECTIVE GADS OF BRIDGES.
7. FOR REINFORCEMENT DETAILS OF RCC BRACKET SUPPORTING APPROACH SLAB REFER SEPARATE ABUTMENT DRAWINGS.
8. THIS DRAWING SHALL BE READ IN CONJUNCTION WITH THE GENERAL ARRANGEMENT DRAWING OF THE RESPECTIVE BRIDGES.

EMPLOYER	PROJECT	DESIGN CONSULTANT					
Government of Nepal Ministry of Physical Infrastructure and Transport, Department of Roads, Foreign Co-operation Branch	Nepal India Regional Trade and Transport Project (NIRTTP) (IDA CREDIT No. 5273 - NEP) Detailed Design of Kathmandu (Nagdhunga) - Naubise - Mugling Road and Bridges	Intercontinental Consultants & Technocrats Pvt.Ltd, A-8, Green Park, New Delhi - 110016 Ph : 4086-3000, Fax 2685-5252 In Joint Venture With Soosung Engineering Co. Ltd., South Korea	In Association With Full Bright Consultancy (Pvt.) Ltd. 316,Baburam Acharya Sadak, Sinamangal, Kathmandu, GPO Box: 4970, Kathmandu, Nepal	Prepared By		K.M.JOHRI	DRAWING TITLE: DETAILS OF APPROACH SLAB PACKAGE-II (NAUBISE-GALCHI)
				Designed By		AGNIMITA	
				Checked By		P.K.KHAN	
				Approved By		B.N.SINGH	Drawing No.: NIRTTP/NAG-MUG/PACKAGE-II/MISC.-01a

Scale: As Shown
Date: JUNE-2018

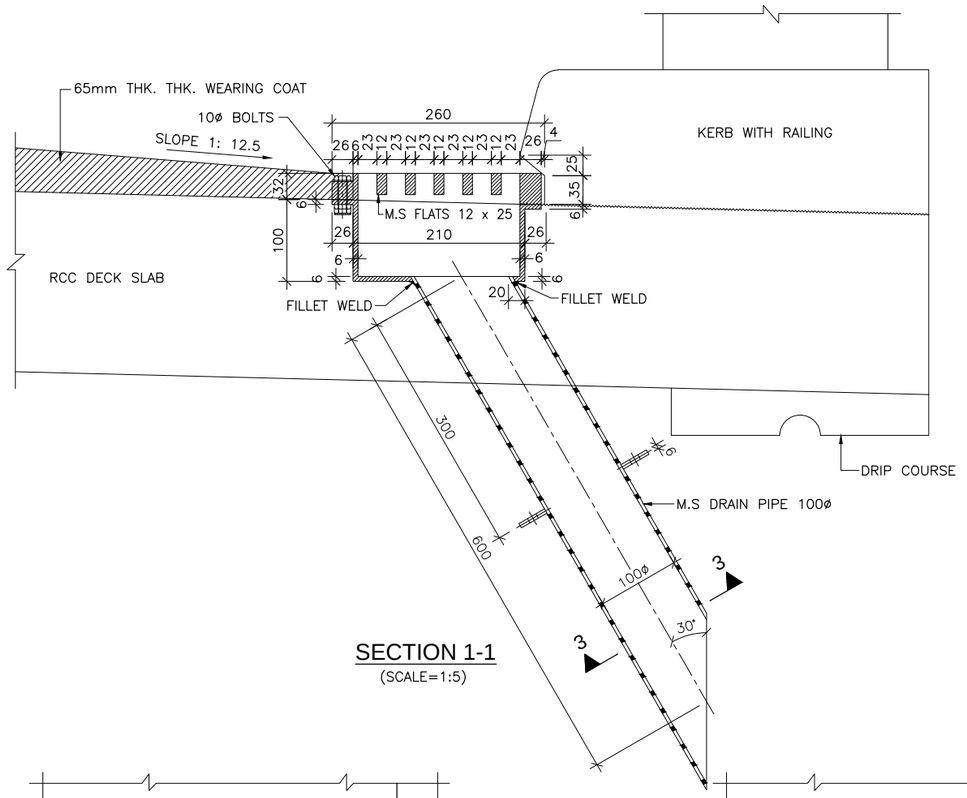

SECTION 1-1
(SCALE=1:5)

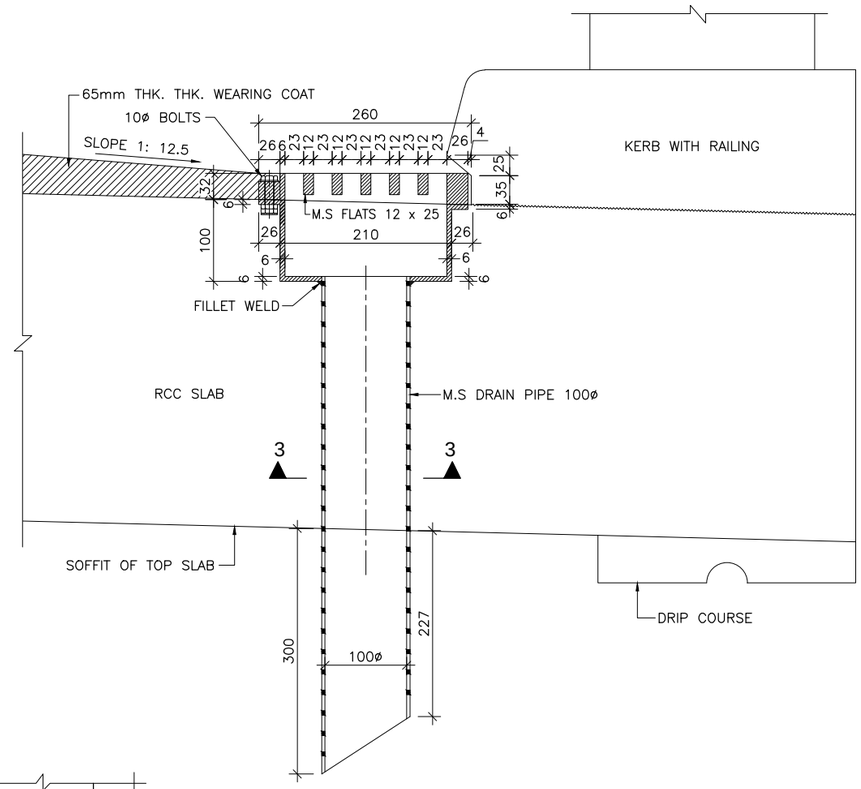

SECTION 2-2
(SCALE=1:5)

NOTES:-

1. ALL DIMENSIONS ARE IN MILLIMETER UNLESS OTHERWISE MENTIONED. ONLY WRITTEN DIMENSIONS ARE TO BE FOLLOWED. NO DIMENSION IS TO BE SCALED.
2. DRAINAGE SPOUT AND COLLECTION PIT ASSEMBLY SHALL BE FABRICATED FROM MILD STEEL AND AFTER FABRICATION THE COMPLETE ASSEMBLY EXCEPT GRATING MILD STEEL AND AFTER FABRICATION THE COMPLETE ASSEMBLY EXCEPT GRATING SHALL BE GIVEN A HOT DIPPED GALVANISED COATING.
3. SPACING OF DRAINAGE SPOUT SHALL NOT EXCEED 5000 CENTER TO CENTER.
4. 65mm THK. THK. WEARING COAT COMPRISING OF 40mm THK. THK. ASPHALTIC CONCRETE OVER LAID WITH 25mm THK. THK. MASTIC ASPHALT SHALL BE PROVIDED AS PER SECTION 500 OF MORTH SPECIFICATIONS.
5. THIS DRAWING SHALL BE READ IN CONJUNCTION WITH THE GENERAL ARRANGEMENT DRAWING OF THE RESPECTIVE BRIDGES.

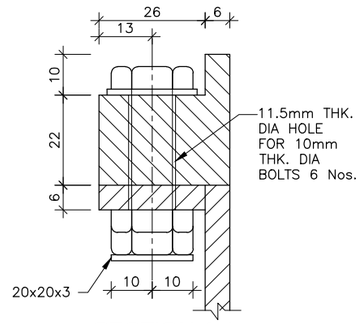

SECTION 4-4
(SCALE=1:1)

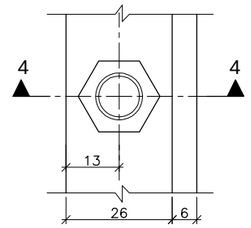

DETAIL-A
(SCALE=1:1)

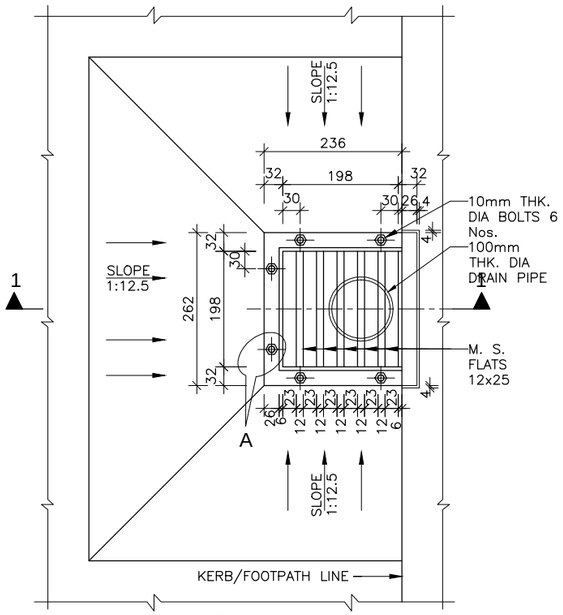

PLAN
DETAIL OF DRAINAGE SPOUT AND COLLECTION PIT
(FOR RCC AND PSC SUPERSTRUCTURE)
(SCALE=1:7)

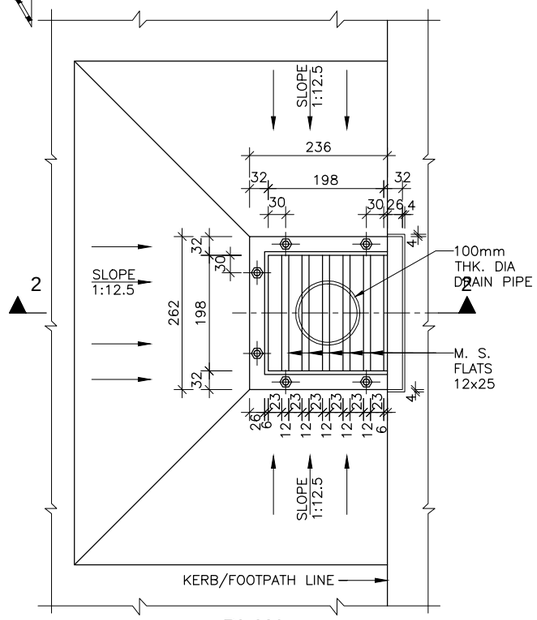

PLAN
DETAIL OF DRAINAGE SPOUT AND COLLECTION PIT
(FOR RCC SOLID SLAB AND BOX STRUCTURE)
(SCALE=1:7)

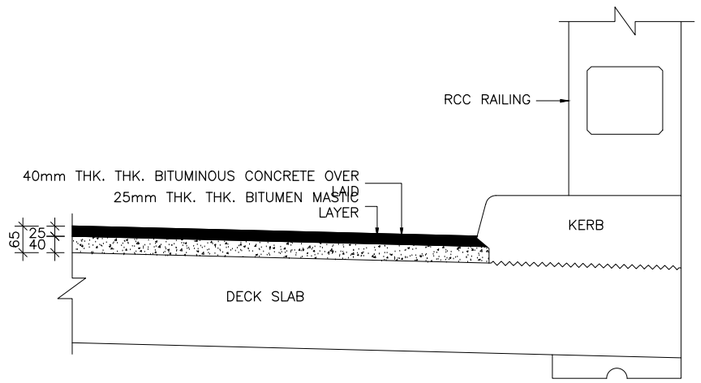

DETAIL OF ASPHALTIC WEARING COAT
(SCALE=1:10)

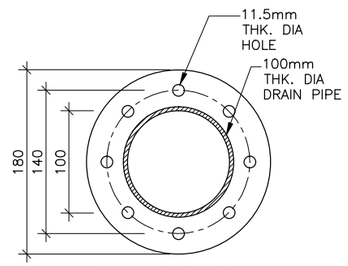

SECTION 3-3
(SCALE=1:4)

EMPLOYER	PROJECT	DESIGN CONSULTANT					
Government of Nepal Ministry of Physical Infrastructure and Transport, Department of Roads, Foreign Co-operation Branch	Nepal India Regional Trade and Transport Project (NIRTTP) (IDA CREDIT No. 5273 - NEP) Detailed Design of Kathmandu (Nagdhunga) - Naubise - Mugling Road and Bridges	Intercontinental Consultants & Technocrats Pvt.Ltd, A-8, Green Park, New Delhi - 110016 Ph : 4086-3000, Fax 2685-5252 In Joint Venture With Soosung Engineering Co. Ltd., South Korea	In Association With Full Bright Consultancy (Pvt.) Ltd. 316,Baburam Acharya Sadak, Sinamangal, Kathmandu, GPO Box: 4970, Kathmandu, Nepal	Prepared By		K.M.JOHRI	DRAWING TITLE: DETAILS OF DRAINAGE SPOUT AND WEARING COAT PACKAGE-II (NAUBISE-GALCHI)	Scale: As Shown	Date: JUNE-2018
				Designed By		AGNIMITA			
				Checked By		P.K.KHAN			
				Approved By		B.N.SINGH	Drawing No.: NIRTTP/NAG-MUG/PACKAGE-II/MISC.-02		

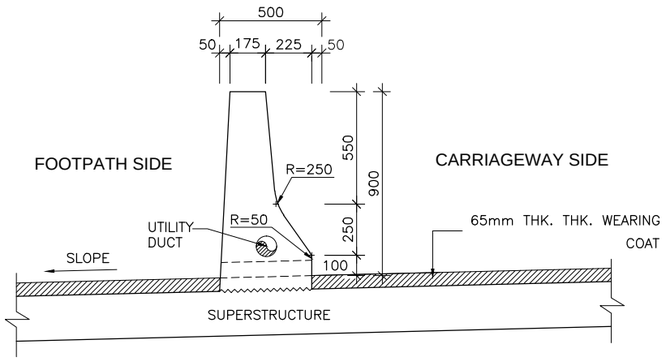

DIMENSIONAL DETAILS OF INTERMEDIATE CRASH BARRIER

(SCALE 1:20)

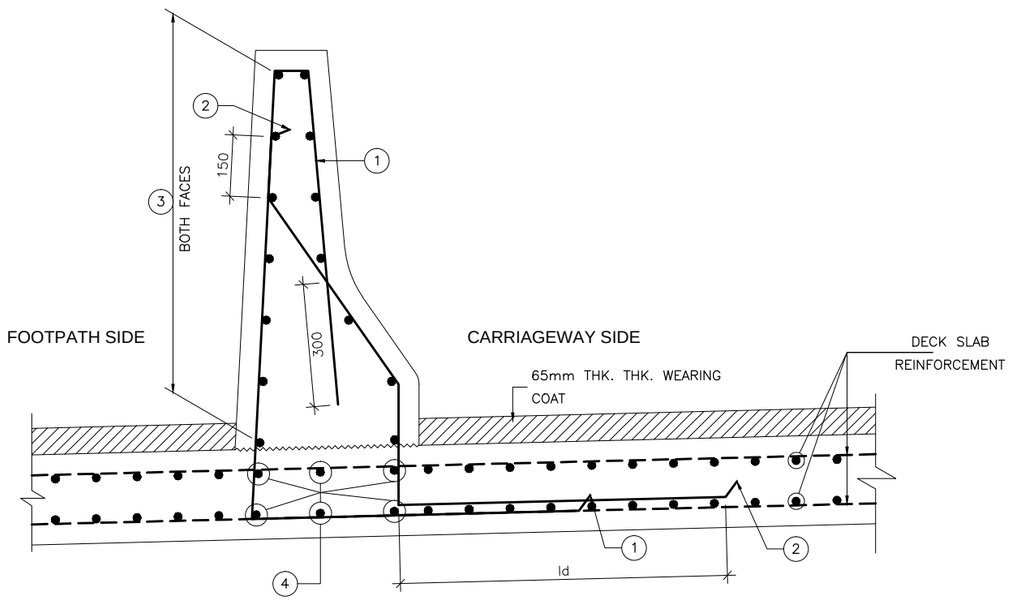

REINFORCEMENT DETAILS OF INTERMEDIATE CRASH BARRIER

(SCALE 1:10)

NOTES:-

1. ALL DIMENSIONS ARE IN MILLIMETER UNLESS OTHERWISE MENTIONED. ONLY WRITTEN DIMENSIONS ARE TO BE FOLLOWED. NO DIMENSION IS TO BE SCALED.
2. THE CRASH BARRIER DESIGN HAS BEEN ADOPTED AS PER CLAUSE 115.4.1 OF IRC:5–1998.
3. THE CONCRETE GRADE SHALL BE M40.
4. THE REINFORCING STEEL SHALL BE TMT DEFORMED BARS (GRADE DESIGNATION Fe:500D) CONFORMING TO IS:1786.
5. CLEAR COVER TO OUTERMOST STEEL IS 50mm THK..
6. DOWEL BARS OF THE CRASH BARRIER SHALL BE PROPERLY ANCHORED INTO THE DECK SLAB.
7. SUITABLE REFLECTIVE (LUMINOUS) DEVICES SHALL BE PROVIDED ON THE TRAFFIC FACE OF THE BARRIER AT SUITABLE INTERVAL TO ENSURE ADEQUATE VISIBILITY DURING NIGHT AND FOGGY CONDITIONS.
8. LAPPING OF REINFORCEMENT SHALL BE AVOIDED AS FAR AS POSSIBLE. IN CASE LAPPING OF BARS BECOMES UNAVOIDABLE, MINIMUM LAP LENGTH OF REINFORCEMENT BARS SHALL BE CALCULATED AS eFOLLOW WITH MAXIMUM ALLOWABLE LAPPING (p) OF 50% ONLY.
   (IRC:112–2011) (CLAUSE:15.2.5.1)
   LAP LENGTH ls = α1.lbnet
   α1 = 1.0 FOR p%≤25%
   α1 = 1.15 FOR 25%≤p%≤33%
   α1 = 1.4 FOR 33%≤p%≤50%
   IN THE CASE OF BUNDLED BARS
   LAP LENGTH = 1.3x ls(CLAUSE:15.2.7.3)
   (IRC:112–2011) (CLAUSE:15.2.3.3)
   DEVELOPMENT LENGTH (lbnet)
   lbnet = α.lb (α = 1.0)
   lb = kø
   k = 40 FOR M30 (Fe500D)
   k = 36 FOR M35 (Fe500D)
   k = 34 FOR M40 (Fe500D)
   FOR UNFAVORABLE BOND CONDITION THE lb SHOULD BE MULTIPLIED BY FACTOR OF 1.43.
   FOR ø>32mm THK. lb, SHOULD BE INCREASED BY MULTIPLYING FACTOR $\left(\frac{100}{132-ø}\right)$
9. THIS DRAWING SHALL BE READ IN CONJUNCTION WITH THE GENERAL ARRANGEMENT DRAWING OF THE RESPECTIVE BRIDGES.

REINFORCEMENT SCHEDULE

BAR MARK	DESCRIPTION	SHAPE	REMARKS
1	16 ϕ@150c/c		
2	16 ϕ@150c/c		
3	12 ϕ@150c/c		
4	16 ϕ – 6 Nos.		

EMPLOYER	PROJECT	DESIGN CONSULTANT					
Government of Nepal Ministry of Physical Infrastructure and Transport, Department of Roads, Foreign Co-operation Branch	Nepal India Regional Trade and Transport Project (NIRTTP) (IDA CREDIT No. 5273 - NEP) Detailed Design of Kathmandu (Nagdhunga) - Naubise - Mugling Road and Bridges	Intercontinental Consultants & Technocrats Pvt.Ltd, A-8, Green Park, New Delhi - 110016 Ph : 4086-3000, Fax 2685-5252 In Joint Venture With Soosung Engineering Co. Ltd., South Korea	In Association With Full Bright Consultancy (Pvt.) Ltd. 316,Baburam Acharya Sadak, Sinamangal, Kathmandu, GPO Box: 4970, Kathmandu, Nepal	Prepared By		K.M.JOHRI	DRAWING TITLE: DIMENSIONAL AND REINFORCEMENT DETAILS OF CRASH BARRIER PACKAGE-II (NAUBISE-GALCHI)
				Designed By		AGNIMITA	
				Checked By		P.K.KHAN	
				Approved By		B.N.SINGH	Drawing No.: NIRTTP/NAG-MUG/PACKAGE-II/MISC.-03

Scale: As Shown

Date: JUNE-2018

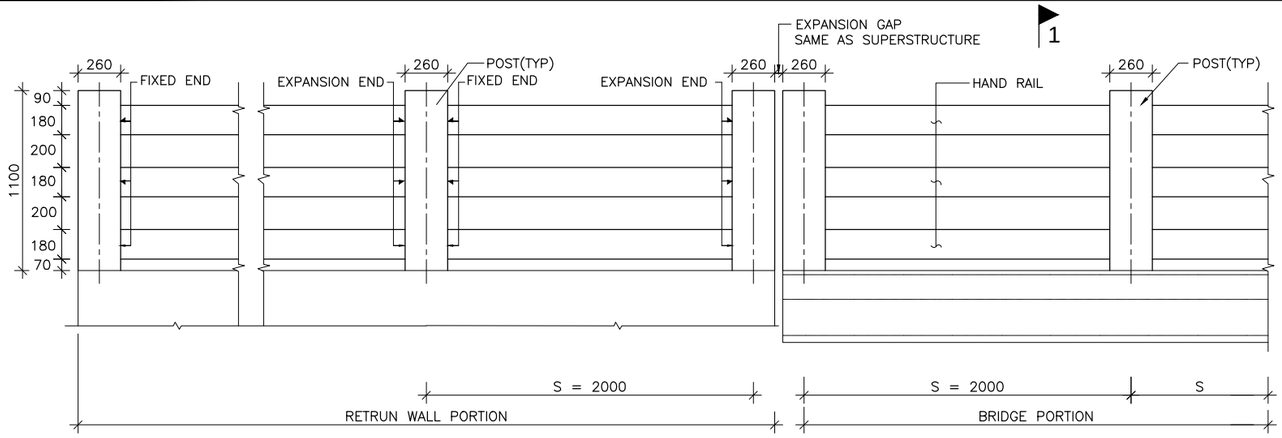

GENERAL ELEVATION
(SCALE 1:25)

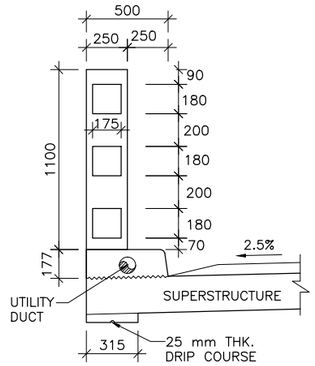

SECTION 1-1
(SCALE 1:25)

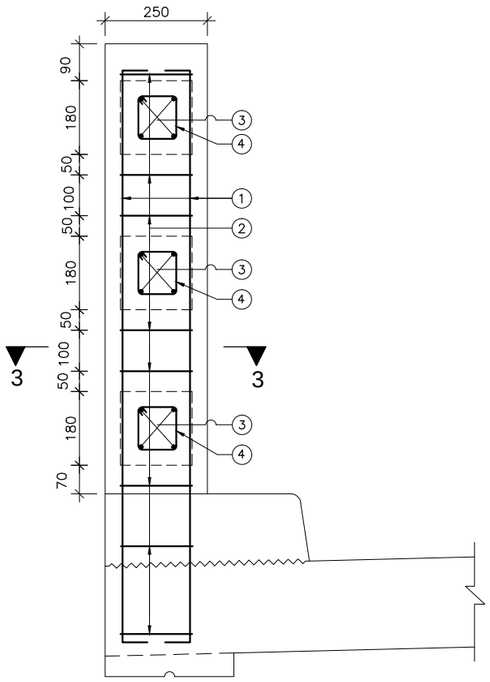

REINF. DETAILS OF RAILING POST
(SCALE 1:10)

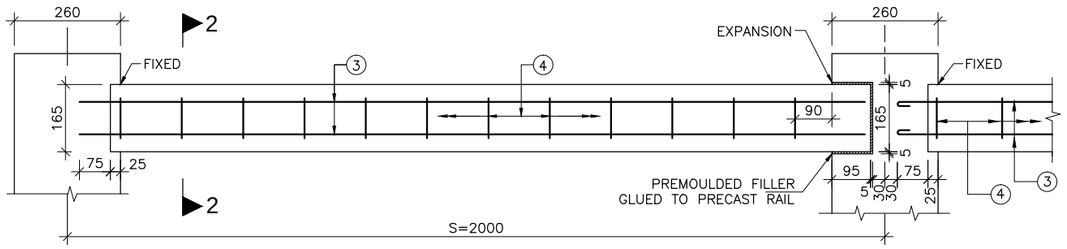

ELEVATION
(SCALE 1:10)

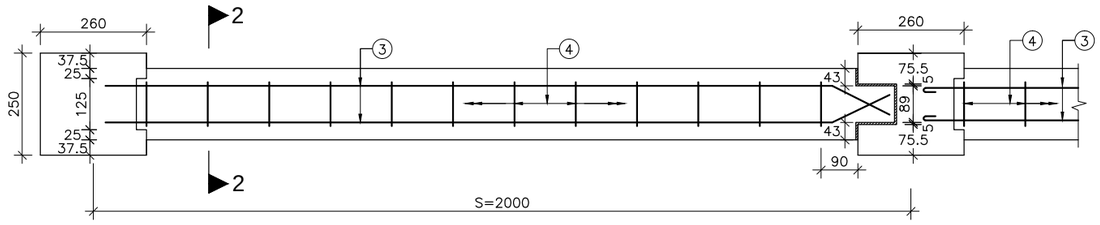

PLAN
REINF. DETAILS OF HANDRAIL (Precast)
(SCALE 1:10)

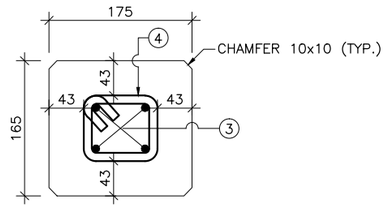

SECTION 2-2
(SCALE 1:5)

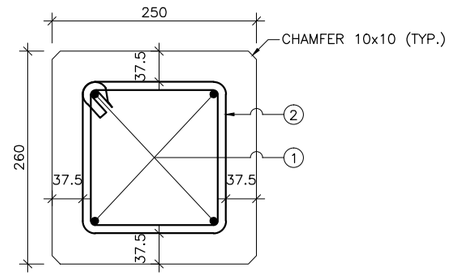

SECTION 3-3
(SCALE 1:5)

NOTES:-

1. ALL DIMENSIONS ARE IN MILLIMETER UNLESS OTHERWISE MENTIONED. ONLY WRITTEN DIMENSIONS ARE TO BE FOLLOWED. NO DIMENSION IS TO BE SCALED.
2. THE CONCRETE GRADE SHALL BE M30.
3. THE REINFORCING STEEL SHALL BE TMT DEFORMED BARS (GRADE DESIGNATION Fe:500D) CONFORMING TO IS:1786.
4. CLEAR COVER TO OUTERMOST STEEL IS 50mm THK..
5. CENTRE TO CENTRE SPACING 'S' BETWEEN SUCCESSIVE VERTICAL POSTS SHOWN IN THE ELEVATION SHALL BE ADJUSTED TO SUIT THE LENGTH OF THE BRIDGE SPAN FOR WHICH THE RAILING IS USED BUT IN NO CASE ITS SHALL EXCEED 2000mm THK..
6. CASTING OF THE POST SHALL BE DONE IN SINGLE POUR AFTER ACCURAELY POSITIONING THE PRECAST HANDRAILS.
7. LAPPING OF REINFORCEMENT SHALL BE AVOIDED AS FAR AS POSSIBLE. IN CASE LAPPING OF BARS BECOMES UNAVOIDABLE, MINIMUM LAP LENGTH OF REINFORCEMENT BARS SHALL BE CALCULATED AS FOLLOW WITH MAXIMUM ALLOWABLE LAPPING (p) OF 50% ONLY.

   (IRC:112–2011) (CLAUSE:15.2.5.1)

   LAP LENGTH ls = α_1.lbnet

   α_1 = 1.0 FOR p%≤25%

   α_1 = 1.15 FOR 25%≤p%≤33%

   α_1 = 1.4 FOR 33%≤p%≤50%

   IN THE CASE OF BUNDLED BARS

   LAP LENGTH = 1.3x ls(CLAUSE:15.2.7.3)

   (IRC:112–2011) (CLAUSE:15.2.3.3)

   DEVELOPMENT LENGTH (lbnet)

   lbnet = α.lb (α = 1.0)

   lb = kϕ

   k = 40 FOR M30 (Fe500D)

   k = 36 FOR M35 (Fe500D)

   k = 34 FOR M40 (Fe500D)

   FOR UNFAVORABLE BOND CONDITION THE lb SHOULD BE MULTIPLIED BY FACTOR OF 1.43.

   FOR ϕ>32mm THK. lb, SHOULD BE INCREASED BY MULTIPLYING FACTOR $(\frac{132-\phi}{100})$
8. THIS DRAWING SHALL BE READ IN CONJUNCTION WITH THE GENERAL ARRANGEMENT DRAWING OF THE RESPECTIVE BRIDGES.

REINFORCEMENT SCHEDULE

BAR MARK	DESCRIPTION	SHAPE	REMARKS
1	12 ϕ –4 Nos.		
2	10 ϕ –8 Nos.		STIRRUPS
3	10 ϕ –4 Nos.		
4	8ϕ @150 c/c		STIRRUPS

EMPLOYER	PROJECT	DESIGN CONSULTANT					
Government of Nepal Ministry of Physical Infrastructure and Transport, Department of Roads, Foreign Co-operation Branch	Nepal India Regional Trade and Transport Project (NIRTTP) (IDA CREDIT No. 5273 - NEP) Detailed Design of Kathmandu (Nagdhunga) - Naubise - Mugling Road and Bridges	Intercontinental Consultants & Technocrats Pvt.Ltd, A-8, Green Park, New Delhi - 110016 Ph : 4086-3000, Fax 2685-5252 In Joint Venture With Soosung Engineering Co. Ltd., South Korea	In Association With Full Bright Consultancy (Pvt.) Ltd. 316,Baburam Acharya Sadak, Sinamangal, Kathmandu, GPO Box: 4970, Kathmandu, Nepal	Prepared By		K.M.JOHRI	DRAWING TITLE: DIMENSIONAL AND REINFORCEMENT DETAILS OF RCC RAILING PACKAGE-II (NAUBISE-GALCHI)	Scale: As Shown	Date: JUNE-2018
				Designed By		AGNIMITA			
				Checked By		P.K.KHAN	Drawing No.: NIRTTP/NAG-MUG/PACKAGE-II/MISC.-04		
				Approved By		B.N.SINGH			

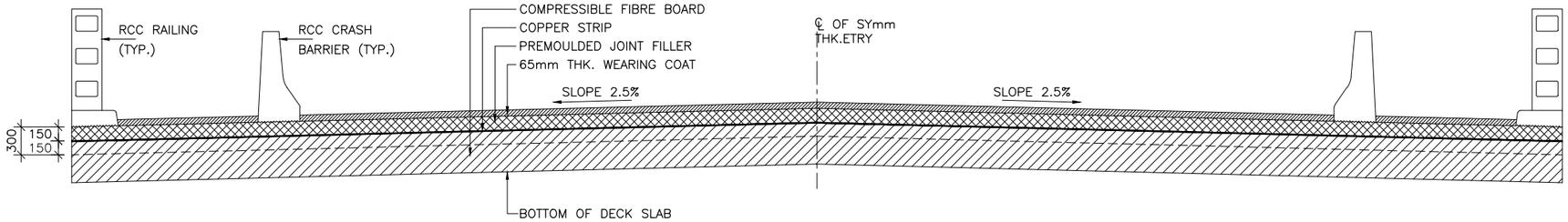

LAYOUT OF COPPER STRIP AT ABUTMENT LOCATION

(SCALE 1:40)

NOTES:-

1. ALL DIMENSIONS ARE IN MILLIMETER UNLESS OTHERWISE MENTIONED. ONLY WRITTEN DIMENSIONS ARE TO BE FOLLOWED. NO DIMENSION IS TO BE SCALED.
2. SPLICING OF MAIN LONGITUDINAL BARS IN DECK SLAB SHALL BE AVOIDED AS FAR AS PRACTICABLE. IN CASE THE SPLICING OF BARS BECOMES UNAVOIDABLE, THE ARRANGEMENT SHALL BE AS SHOWN IN THE DRAWING.
3. AREA OF BARS SPLICED AT ANY SECTION SHALL NOT EXCEED 50% OF THE TOTAL AREA OF THE BARS PROVIDED AT THE SECTION..
4. JOINT FILLER SHALL CONFORM TO I.S.1838. PRODUCTS WITH I.S.I. CERTIFICATION MARK SHALL ONLY BE USED..
5. THIS DRAWING SHALL BE READ IN CONJUNCTION WITH THE GENERAL ARRANGEMENT DRAWING OF THE RESPECTIVE BRIDGES.

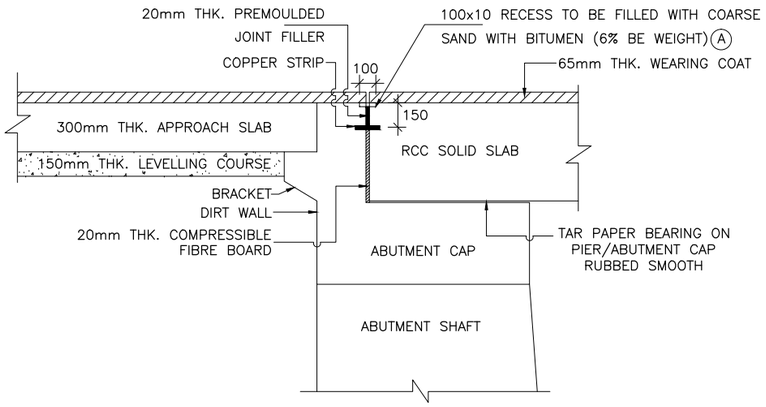

AT ABUTMENT

DETAILS OF EXPANSION JOINT

(SCALE 1:25)

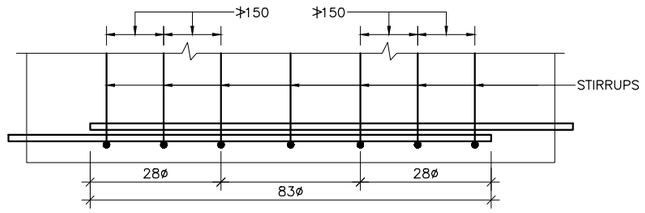

TRANSVERSE REINFORCEMENT AT LAP SPLICES IN KERBS

(SCALE 1:25)

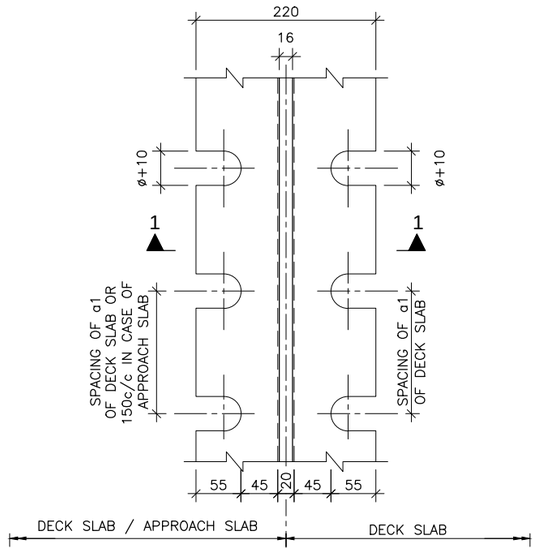

DETAIL OF COPPER STRIP

(SCALE 1:5)

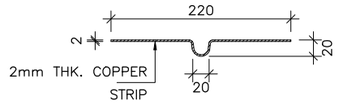

SECTION B-B

(SCALE 1:5)

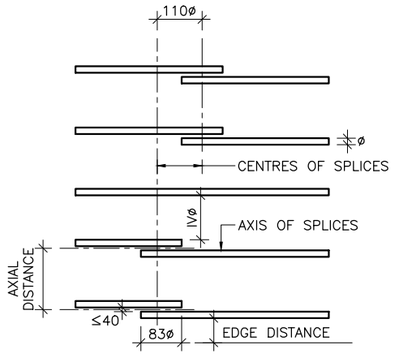

LAP SPLICES OF BARS IN TENSION

(SCALE 1:10)

EMPLOYER	PROJECT	DESIGN CONSULTANT					
Government of Nepal Ministry of Physical Infrastructure and Transport, Department of Roads, Foreign Co-operation Branch	Nepal India Regional Trade and Transport Project (NIRTTP) (IDA CREDIT No. 5273 - NEP) Detailed Design of Kathmandu (Nagdhunga) - Naubise - Mugling Road and Bridges	Intercontinental Consultants & Technocrats Pvt.Ltd, A-8, Green Park, New Delhi - 110016 Ph : 4086-3000, Fax 2685-5252 In Joint Venture With Soosung Engineering Co. Ltd., South Korea In Association With Full Bright Consultancy (Pvt.) Ltd. 316,Baburam Acharya Sadak, Sinamangal, Kathmandu, GPO Box: 4970, Kathmandu, Nepal	Prepared By		K.M.JOHRI	DRAWING TITLE: DETAILS OF FILLER TYPE EXPANSION JOINT PACKAGE-II (NAUBISE-GALCHI)	Scale: As Shown	Date: JUNE-2018
			Designed By		AGNIMITA			
			Checked By		P.K.KHAN	Drawing No.: NIRTTP/NAG-MUG/PACKAGE-II/MISC.-05		
			Approved By		B.N.SINGH			