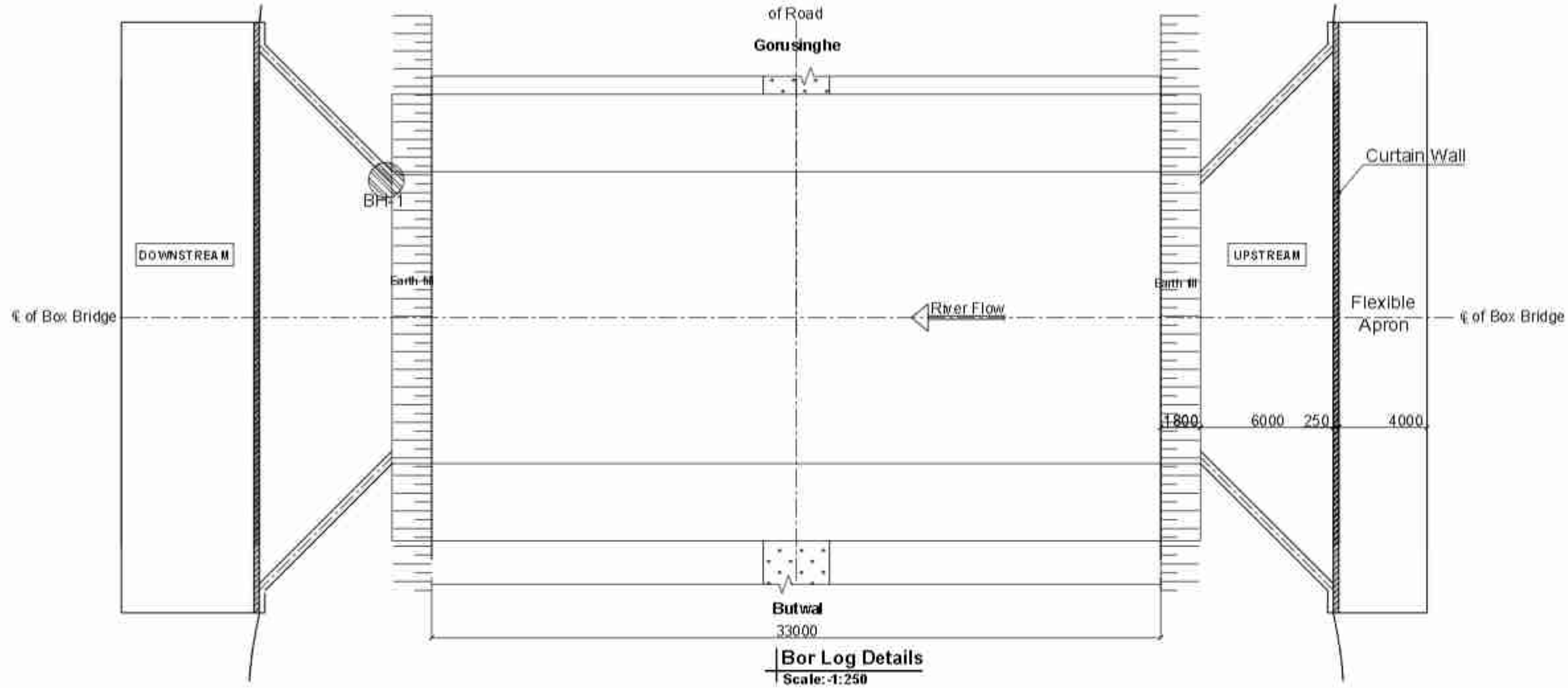

Bor Log Details
Scale:-1:250

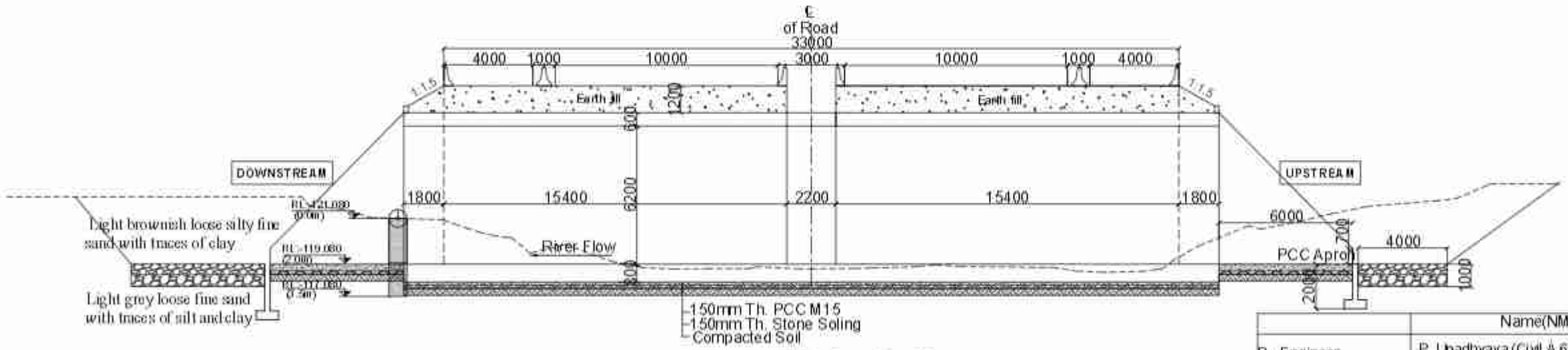

Bor Log Details
Scale:-1:250

	Name(NMC Number)	Signature
P. Engineer	P. Upadhyaya (Civil A 675)	
Structure Engineer	K.P.Wagle(Civil A 127) / P.Shrestha(Civil A 676) / S.Bhattarai (Civil A 904)	
Hydrologist	Dr. P.C. Jha(Civil A 166) / S. Adhikari (Civil A 408)	
Geotechnical Engineer	A. Adhikari(ka 199) / Dr. V. R. S. Shahi	

Government of Nepal Ministry of Physical Infrastructure and Transport **Department of Roads** **Project Directorate Office (ADB)** **SASEC Highway Improvement Project-** **Project Preparatory Consultant (SHIP-PPC)** **ADB Loan No: 3722-NEP**	**CONSULTANT:** Soosung Engineering Co. Ltd, Korea in association with ERMC P (Ltd) and Tech Studio of Engineeering Nepal	**IMPLEMENTING AGENCY:** **DOR, DCID** **ROAD NAME:** **East West Highway (H01)** **Butwal - Gorusinghe Section**	**SHEET TITLE:** Borelog Details of **Dry Nala Box Bridge_B - (6X 6.2)** (46H001/303 A,B) CH-607+844.5	**SCALE:** As Shown		**NAME**	**SIGNATURE**	**REV.NO.**	**DESCRIPTION**	**DATE:** Nov,2022
					Designed by:	P.Shrestha				
					Checked by:	P. Upadhyaya				**DWG.NO.:** 303_Dry Nala
					Approved by:	Dr. T.H.Choi				**SHEET NO.:** 04/10

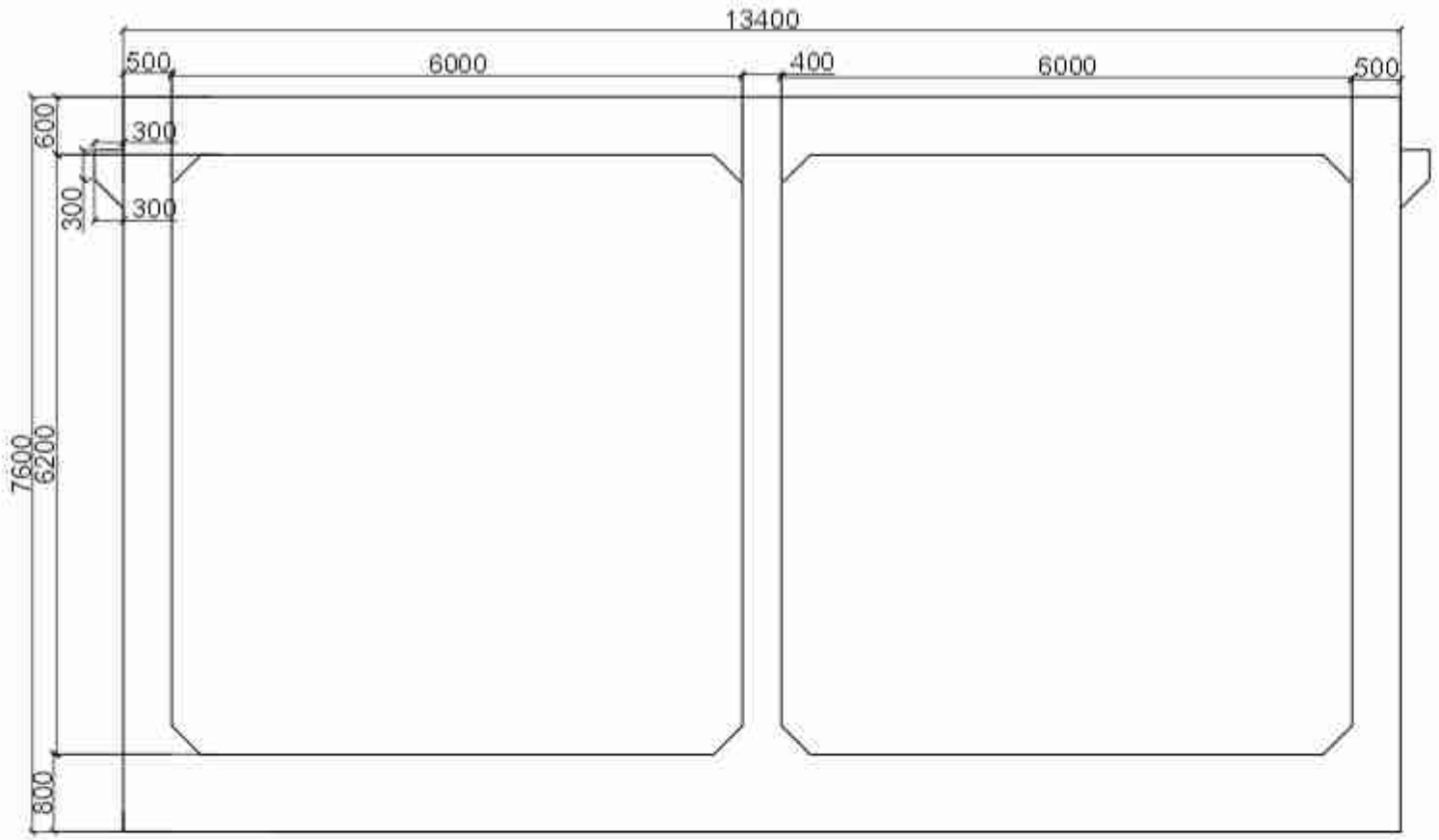

Concrete Outlines (Sectional Elevation)
Scale:- 1:75

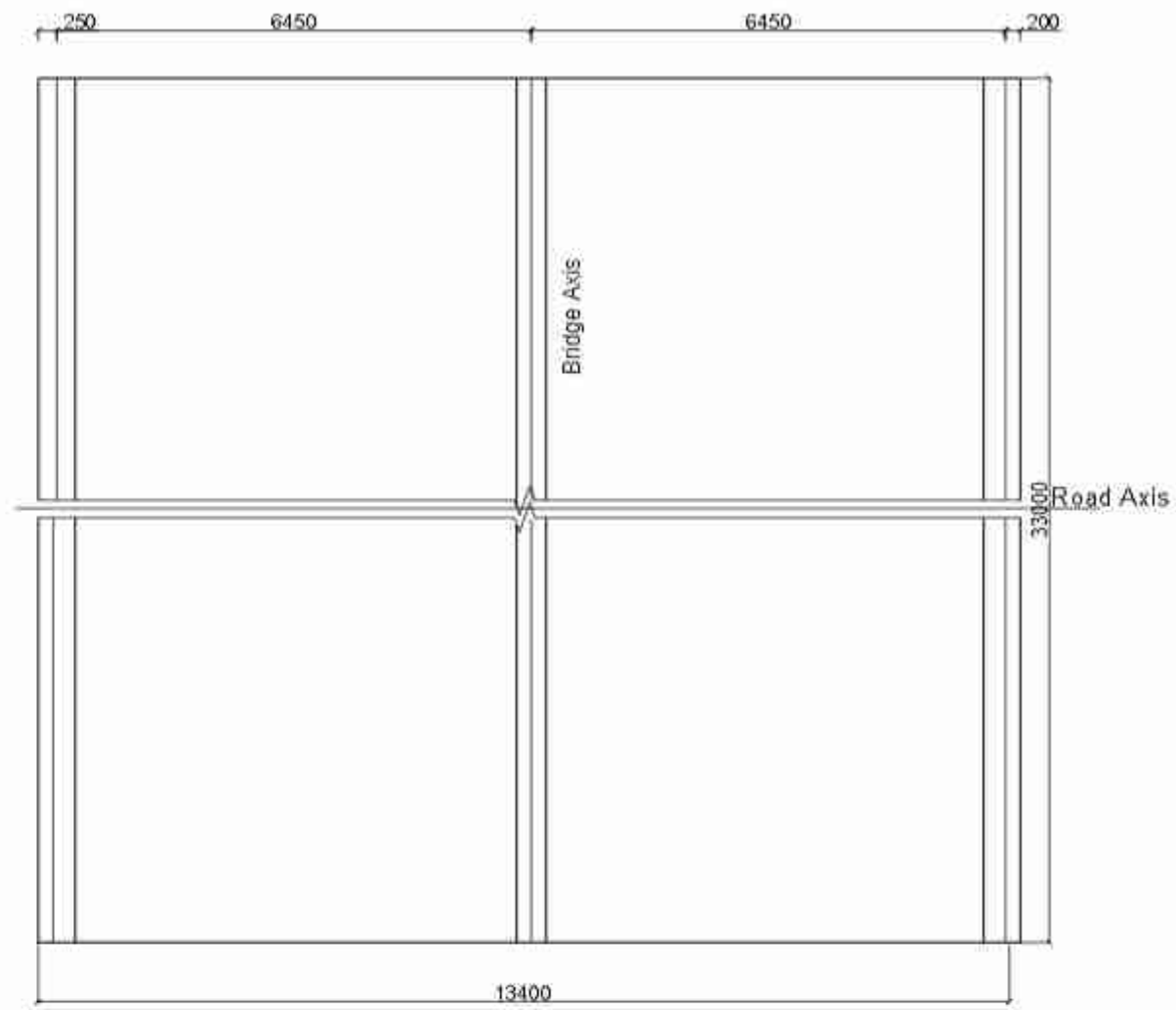

Concrete Outlines (Plan)
Scale:- 1:100

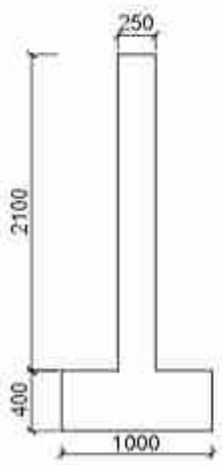

Curtain Wall D/S
Scale:- 1:50

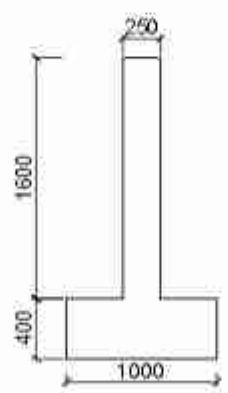

Curtain Wall U/S
Scale:- 1:50

Government of Nepal Ministry of Physical Infrastructure and Transport **Department of Roads** **Project Directorate Office (ADB)** **SASEC Highway Improvement Project-** **Project Preparatory Consultant (SHIP-PPC)** **ADB Loan No: 3722-NEP**	**CONSULTANT:** Soosung Engineering Co. Ltd, Korea in association with ERMC P. (Ltd) and Tech Studio of Engineering Nepal	**IMPLEMENTING AGENCY:** **DOR, DCID** **ROAD NAME:** **East West Highway (H01)** **Butwal - Gorusinghe Section**	**SHEET TITLE:** Concrete Outline of **Dry Nala Box Bridge_B - (6X 6.2)** (46/H001/303 A,B) CH-607+844.5	**SCALE:** As Shown		NAME	SIGNATURE	REV NO.	DESCRIPTION	DATE: Nov,2022
					Designed by:	P Shrestha				DWG.NO.: 303_Dry Nala
					Checked by:	P. Upadhyaya				
					Approved by:	Dr. T.H.Choi				SHEET NO.: 05/10

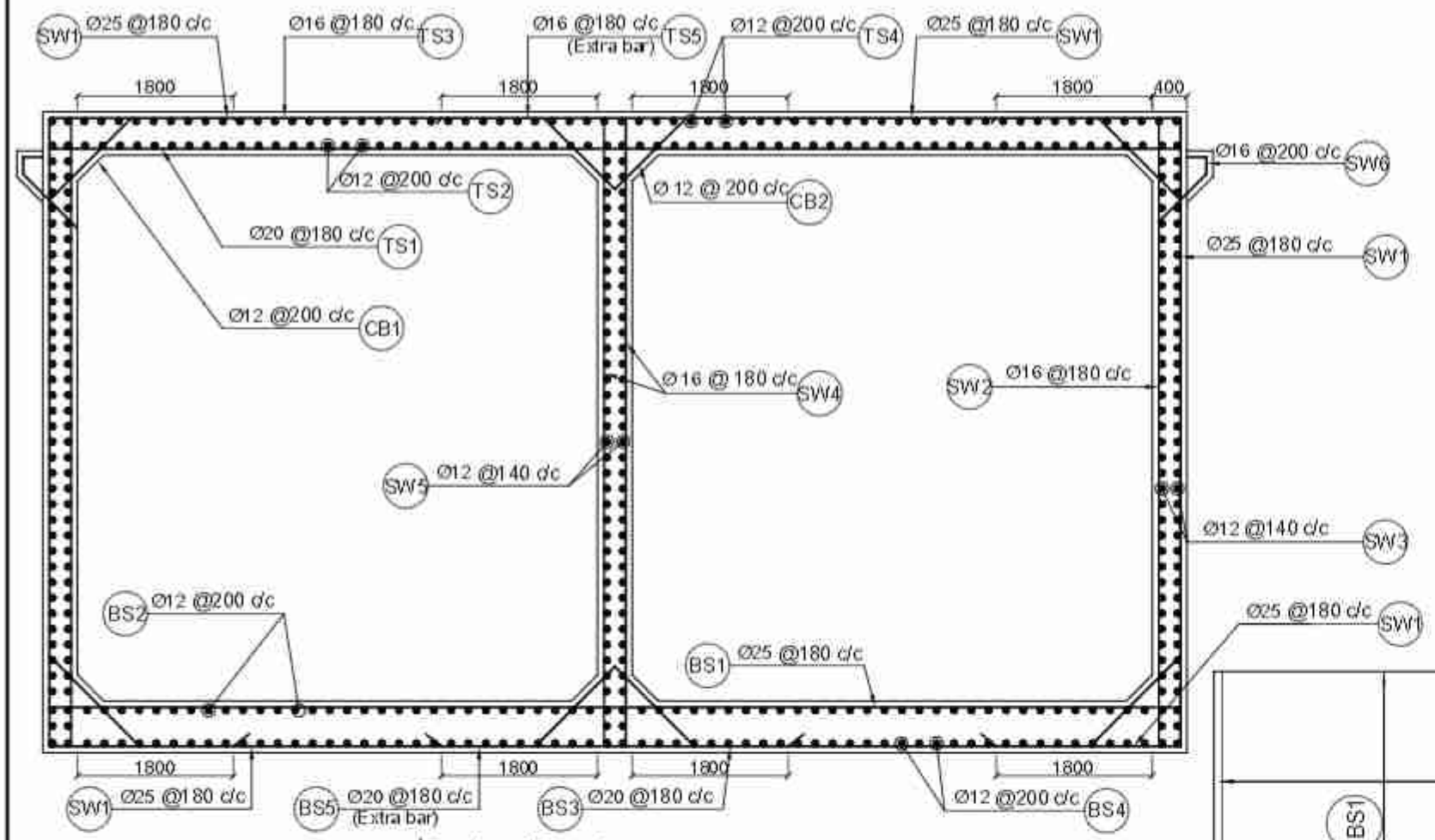

Sectional Elevation
Scale:-1:75

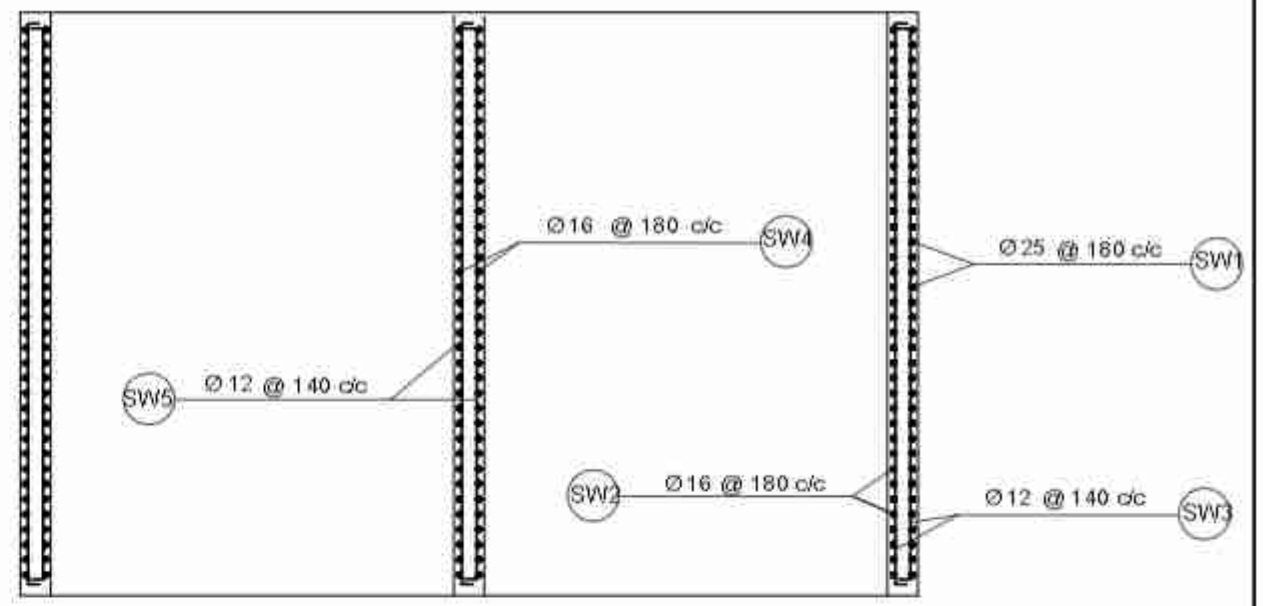

Sectional Plan of Vertical Wall
Scale:-1:75

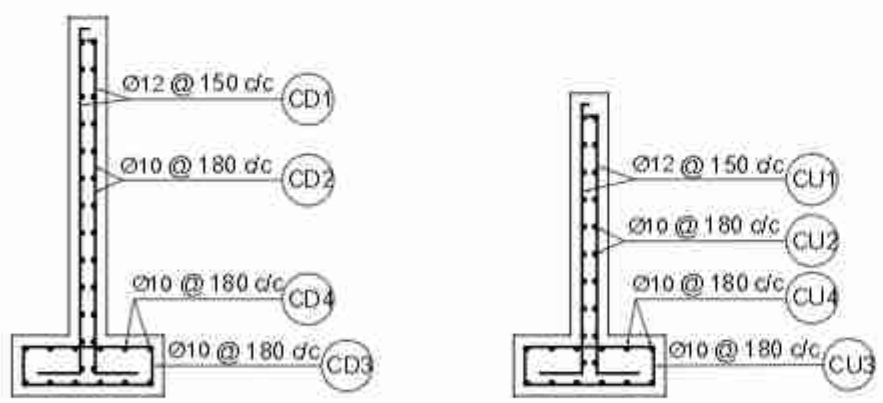

Downstream
Scale:-1:50

Upstream
Scale:-1:50

CURTAIN WALLS
Scale:-1:50

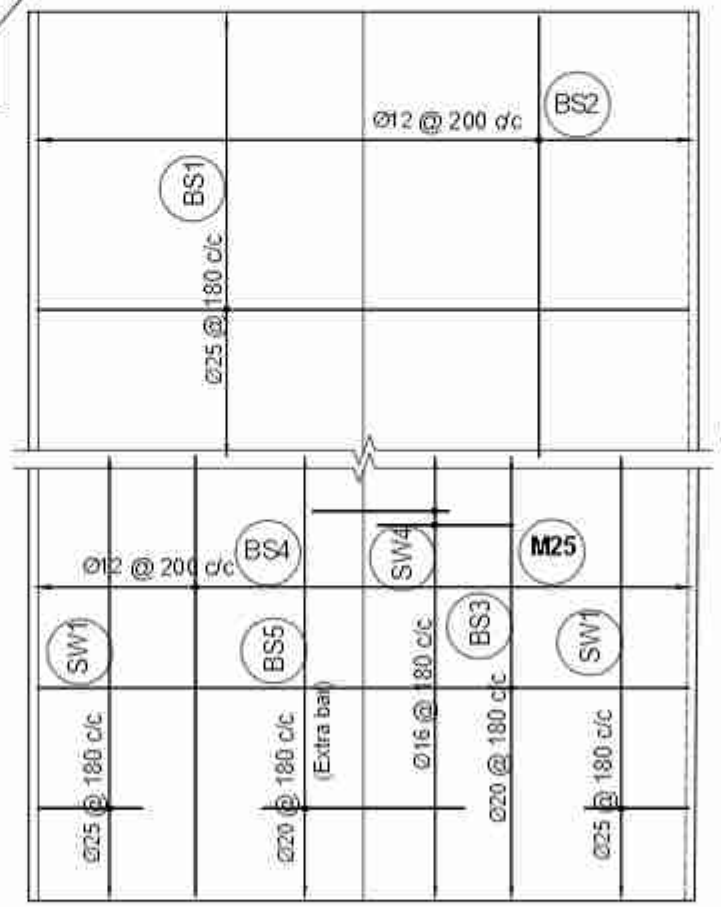

Bottom Sectional Plan
Scale:-1:100

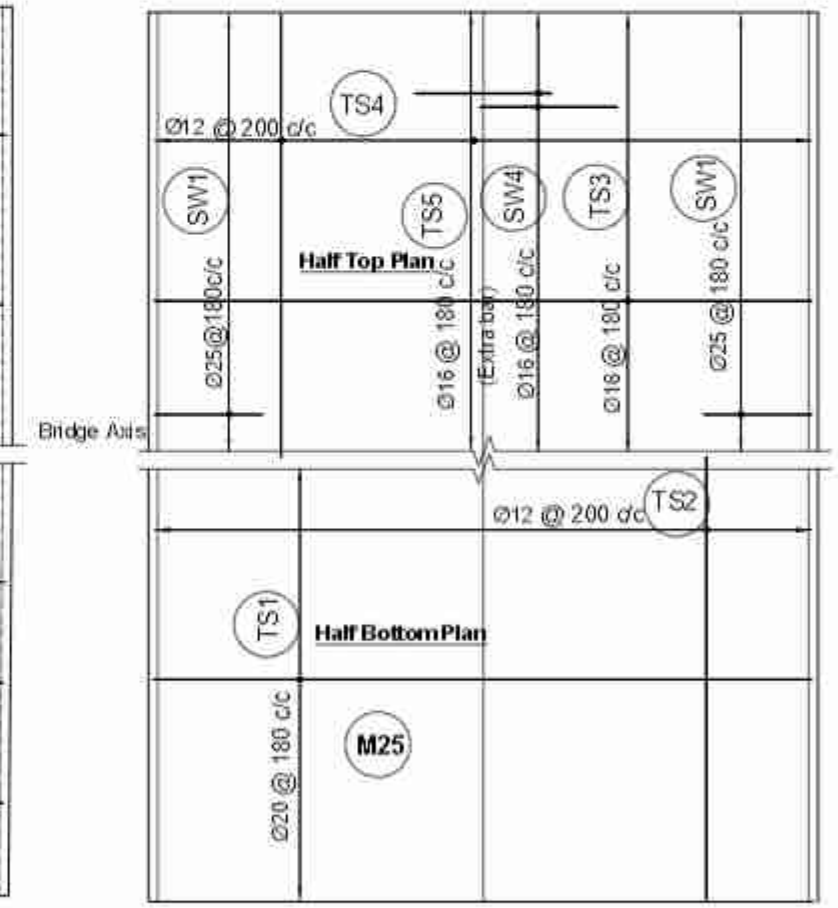

Top Sectional Plan
Scale:-1:100

Government of Nepal Ministry of Physical Infrastructure and Transport **Department of Roads** **Project Directorate Office (ADB)** **SASEC Highway Improvement Project-** **Project Preparatory Consultant (SHIP-PPC)** **ADB Loan No: 3722-NEP**	**CONSULTANT:** Soosung Engineering Co. Ltd, Korea in association with ERMC P. (Ltd) and Tech Studio of Engineeering Nepal	**IMPLEMENTING AGENCY:** **DOR, DCID** **ROAD NAME:** **East West Highway (H01)** **Butwal - Gorusinghe Section**	**SHEET TITLE:** Reinforcement Details of **Dry Nala Box Bridge_B - (6X 6.2)** (46/H001/303 A,B) CH-607+844.5	**SCALE:** As Shown		NAME	SIGNATURE	REV NO.	DESCRIPTION	DATE: Nov,2022
					Designed by:	P.Shrestha				DWG.NO.: 303_Dry Nala
					Checked by:	P. Upadhyaya				
					Approved by:	Dr. T.H.Choi				SHEET NO.: 06/10

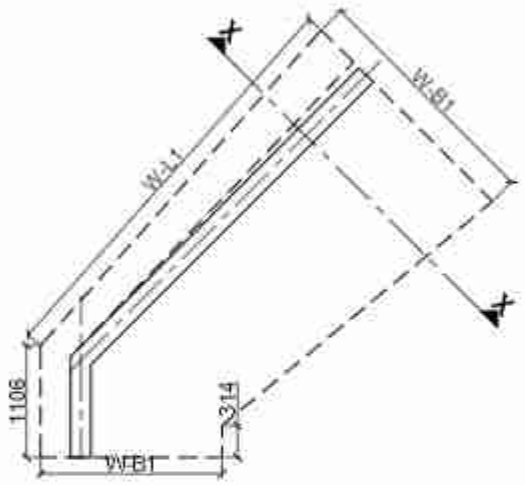

Wing Wall Plan
Scale:-1:75

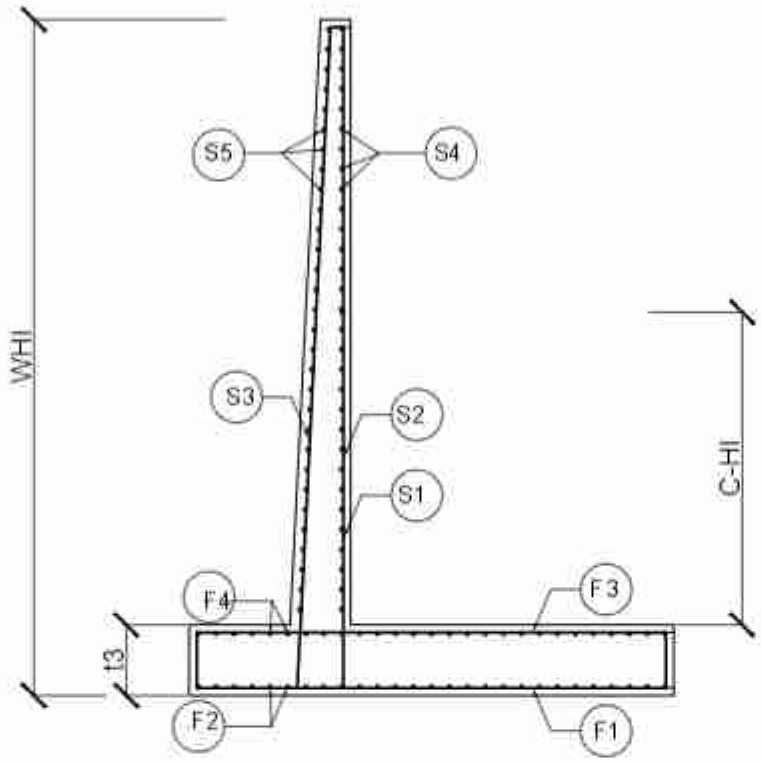

Section at X -X
Scale:-1:75

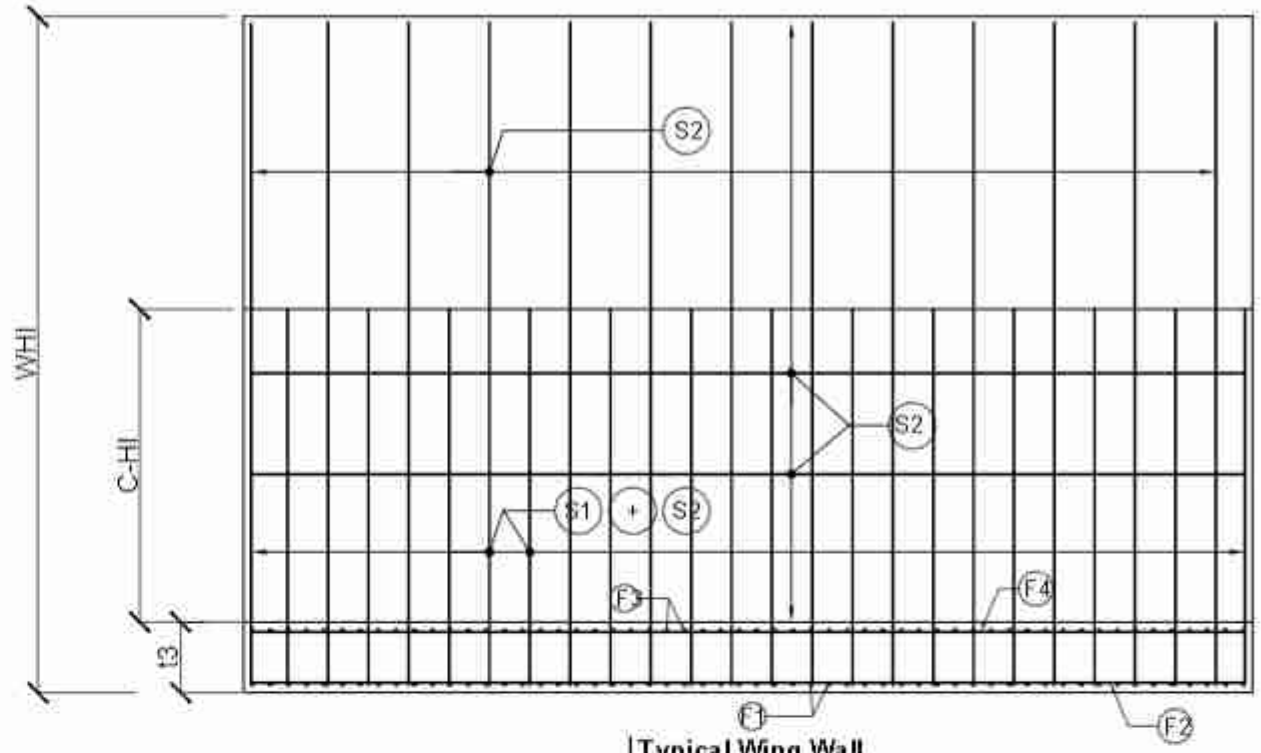

Typical Wing Wall
Scale:-1:75

S.No.	W-H1(m)	W-L1 Length	W-B1	W-B2	t1	t2	t3	x	y
1.	2.00	4300	1800	1800	200	200	200	300	1300
2.	2.50	4300	2200	1800	200	240	200	300	1660
3.	3.00	4300	2400	1800	200	280	250	450	1670
4.	3.50	500	2800	1800	200	300	250	450	2050
5.	4.00	5700	3200	1800	250	350	300	500	2350
6.	4.50	6000	3500	1800	250	400	350	500	2600
7.	5.00	6500	4000	1800	300	500	500	800	2700
8.	6.00	7000	4800	1800	300	600	700	1000	3200

REINFORCEMENT DETAIL OF WING WALL

HEIGHT W-H1	Curtailment Height C-H1	F1		F2		F3		F4		S1		S2		S3		S4		S5		Remarks
		Diameter	Spacing	Diameter	Spacing	Diameter	Spacing	Diameter	Spacing	Diameter	Spacing	Diameter	Spacing	Diameter	Spacing	Diameter	Spacing	Diameter	Spacing	
m	m	mm	mm	mm	mm	mm	mm	mm	mm	mm	mm	mm	mm	mm	mm	mm	mm	mm	mm	
2.0		8	230	8	230	12	200	8	230	12	100			10	200	8	230	8	230	
2.5		8	230	8	230	12	160	8	230	16	160			10	160	8	230	8	230	
3.0	1.60	10	230	8	230	12	140	8	230	12	180	12	180	10	180	8	230	8	230	
3.5	1.55	10	230	8	230	16	160	10	230	16	200	16	200	12	200	8	230	8	230	
4.0	1.65	10	230	10	300	16	150	10	230	16	200	16	200	12	200	10	230	10	230	
4.5	2.10	10	230	10	300	16	140	10	230	16	200	16	200	12	150	10	230	10	230	
5.0	2.45	12	220	10	250	12	150	10	250	16	180	16	180	12	160	10	230	10	230	
6.0	3.10	12	180	10	180	12	150	10	180	20	200	20	200	12	120	10	160	10	160	

Government of Nepal
Ministry of Physical Infrastructure and Transport
Department of Roads
Project Directorate Office (ADB)
SASEC Highway Improvement Project-
Project Preparatory Consultant (SHIP-PPC)
ADB Loan No: 3722-NEP

CONSULTANT: Soosung Engineering Co. Ltd, Korea in association with ERMC P (Ltd) and Tech Studio of Engineeering Nepal

IMPLEMENTING AGENCY: DOR, DCID

ROAD NAME: East West Highway (H01)

Butwal - Gorusinghe Section

SHEET TITLE: Typical Drawing of Wing Wall of **Dry Nala Box Bridge_B - (6X 6.2)** (46/H001/303 A,B) CH-607+844.5

SCALE: As Shown

	NAME	SIGNATURE	REV NO.	DESCRIPTION
Designed by:	P.Shrestha			
Checked by:	P. Upadhyaya			
Approved by:	Dr. T.H.Choi			

DATE: Nov,2022
DWG.NO.: 303_Dry Nala
SHEET NO.: 07/10

Bar Bending Schedule of Top Slab

Sketch	Spacing (mm)	Bar Mark	Ø, mm	No	Lot	Length, m	Total Length, m	Weight Kg/m	Total wt. Kg
Top Slab									
	180	TS1	20	168	1	13.62	2288.16	2.47	5649.78
	200	TS2	12	138	1	15.12	2086.56	0.89	1854.72
	180	TS3	16	168	1	13.62	2288.16	1.58	3615.86
	200	TS4	12	138	1	15.12	2086.56	0.89	1854.72
	180	TS5	16	168	1	4.20	705.60	1.58	1115.02
							Sub-Total (Top Slab) =		14090.1
Base Slab									
	180	BS1	25	184	1	13.55	2491.69	3.86	9613.02
	200	BS2	12	68	1	33.05	2234.18	0.89	1985.94
	180	BS3	20	184	1	13.55	2491.69	2.47	6152.33
	200	BS4	12	68	1	33.05	2234.18	0.89	1985.94
	180	BS5	20	368	1	4.20	1545.60	2.47	3816.30
							Sub-Total (Base Slab) =		23553.5

Bar Bending Schedule of Side Walls

Sketch	spacing (mm)	Bar Mark	Ø, mm	No	Lot	Length, m	Total Length, m	Weight Kg/m	Total wt. Kg
	180	SW1	25	368	1	12.04	4428.88	3.86	17086.73
	180	SW2	16	368	1	7.79	2864.88	1.58	4527.22
	140	SW3	12	90	1	66.50	5985.00	0.89	5320.00
	180	SW4	16	368	1	12.04	4428.88	1.58	6998.72
	140	SW5	12	45	1	66.50	2992.50	0.89	2660.00
	200	SW6	16	332	1	2.07	687.24	1.58	1086.01
	200	CB 1	12	664	1	1.82	1207.15	0.89	1073.02
	200	CB 2	12	156	1	3.64	567.22	0.89	504.19
							Sub-Total (Side Walls) =		39255.9

Bar Bending Schedule of Curtain Walls

Sketch	Spacing (mm)	Bar Mark	Ø, mm	No	Lot	Length, m	Total Length, m	Weight Kg/m	Total wt. Kg
Downstream									
	150	CD1	12	348	1	2.65	922.20	0.89	819.73
	180	CD2	10	15	1	51.90	778.50	0.62	480.56
	180	CD3	10	145	1	2.20	319.00	0.62	196.91
	180	CD4	10	12	1	25.85	310.20	0.62	191.48
							Sub-Total (Downstream) =		1688.7
Upstream									
	150	CU1	12	348	1	2.15	748.20	0.89	665.07
	180	CU2	10	12	1	51.90	622.80	0.62	384.44
	180	CU3	10	145	1	2.20	319.00	0.62	196.91
	180	CU4	10	12	1	25.85	310.20	0.62	191.48
							Sub-Total (Upstream) =		1437.9

Bar Bending Schedule of Wing Wall

Sketch	Spacing (mm)	Bar Mark	Ø, mm	No	Lot	Length, m	Total Length, m	Weight Kg/m	Total wt. Kg
	200	S1	29	48	4	3.71	178.08	2.47	439.70
	200	S2	20	48	4	6.04	289.92	2.47	715.85
	120	S3	12	80	4	6.04	483.20	0.89	429.51
	160	S4	10	33	4	9.45	311.85	0.62	192.50
	160	S5	10	33	4	9.45	311.85	0.62	192.50
	180	F1	12	54	4	3.39	183.06	0.89	162.72
	180	F2	10	19	4	9.45	179.55	0.62	110.83
	150	F3	12	64	4	3.39	216.96	0.89	192.85
	180	F4	10	19	4	9.45	179.55	0.62	110.83
		F5	10	6	4	9.45	56.70	0.62	35.00
							Sub-Total (Base Slab) =		2582.3

Bar Bending Schedule of Approach Slab

Sketch	Spacing (mm)	Bar Mark	Ø, mm	No	Lot	Length, m	Total Length, m	Weight Kg/m	Total wt. Kg
	150	AS1	12	221	2	3.60	1591.20	0.89	1414.40
	150	AS2	12	24	2	33.10	1610.87	0.89	1431.88
	150	AS3	12	221	2	3.60	1591.20	0.89	1414.40
	150	AS4	12	24	2	33.10	1610.87	0.89	1431.88
							Sub-Total (Approach Slab) =		5692.6

Bar Bending Schedule of Safety Barrier Type - 1

Sketch	Spacing (mm)	Bar Mark	Ø, mm	No	Lot	Length, m	Total Length, m	Weight Kg/m	Total wt. Kg
	125	C1	16	81	1	2.03	164.59	1.58	260.10
	125	C2	16	81	1	1.42	114.62	1.58	181.12
		C3	16	11	1	9.96	109.56	1.58	173.13
							Sub-Total of 10m Safety Barrier Type - 1 =		614.3
							For 68m Length		4177.2

Bar Bending Schedule of Safety Barrier Type - 2

Sketch	Spacing (mm)	Bar Mark	Ø, mm	No	Lot	Length, m	Total Length, m	Weight Kg/m	Total wt. Kg
	150	C1	16	8	1	2.21	17.64	1.58	27.88
	150	C2	16	16	1	1.65	26.32	1.58	41.59
		C3	16	12	1	0.90	11.62	1.58	18.20
							Sub-Total of 1m Safety Barrier Type - 2 =		87.7
							For 27m Length		2367.9

Government of Nepal Ministry of Physical Infrastructure and Transport **Department of Roads** **Project Directorate Office (ADB)** **SASEC Highway Improvement Project-** **Project Preparatory Consultant (SHIP-PPC)** **ADB Loan No: 3722-NEP**	**CONSULTANT:** Soosung Engineering Co. Ltd, Korea in association with ERMC P (Ltd) and Tech Studio of Engineeering Nepal	**IMPLEMENTING AGENCY:** **DOR, DCID** **ROAD NAME:** **East West Highway (H01)** **Butwal - Gorusinghe Section**	**SHEET TITLE:** Bar Bending Schedule of **Dry Nala Box Bridge_B - (6X 6.2)** (46/H001/303 A,B) CH-607+844.5	**SCALE:** As Shown		NAME	SIGNATURE	REV NO.	DESCRIPTION	DATE: Nov.2022
					Designed by:	P.Shrestha				DWG.NO.: 303_Dry Nala
					Checked by:	P. Upadhyaya				
					Approved by:	Dr. T.H.Choi				SHEET NO.: 08/10

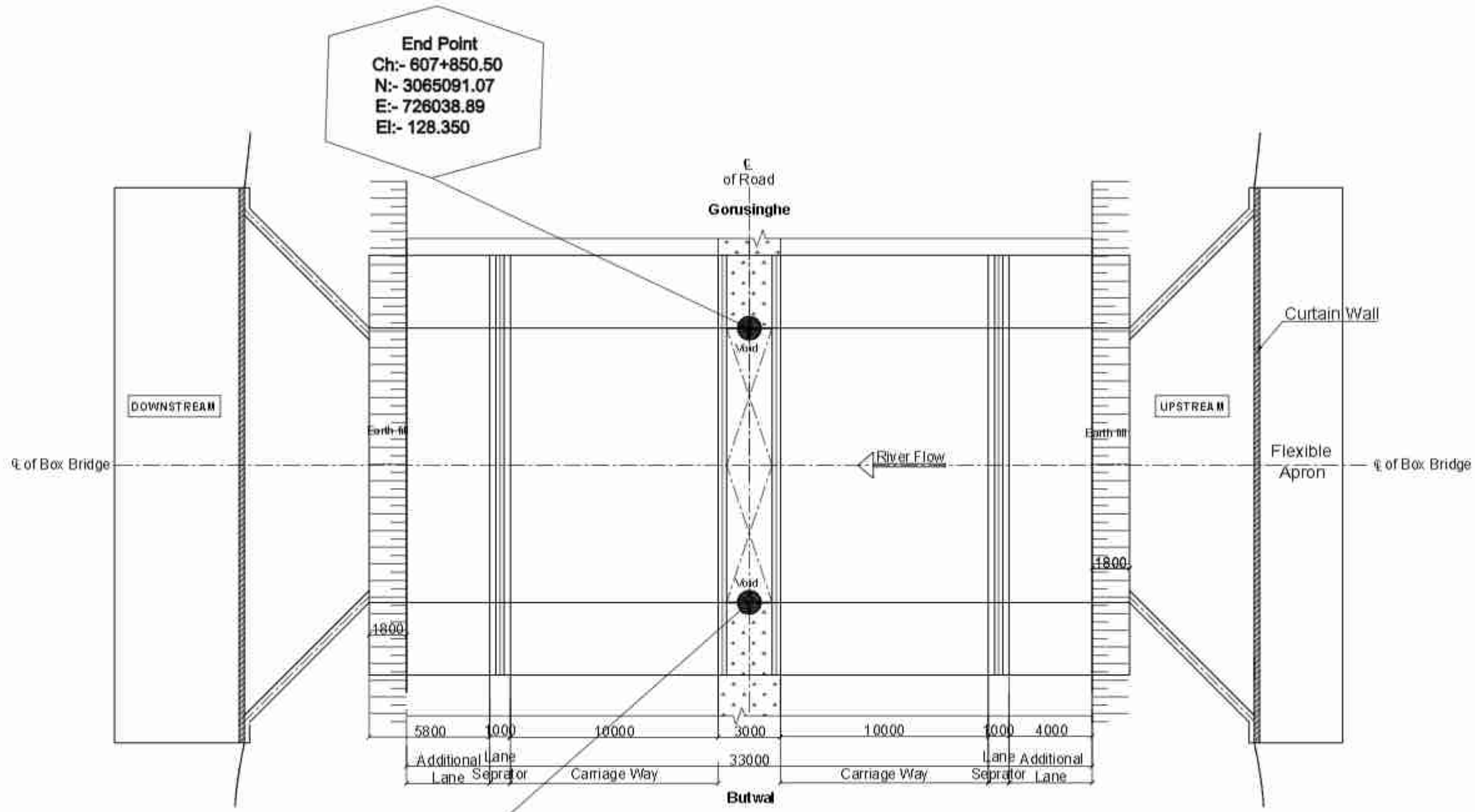

Layout Plan

Scale:-1:250

Start Point
Ch:- 607+838.50
N:- 3065080.25
E:- 726044.07
El:- 128.350

BM-39
N:- 3065111.61
E:- 726042.33
El:- 125.46

Note:-
BM Not Seen In Scale.

Government of Nepal Ministry of Physical Infrastructure and Transport **Department of Roads** **Project Directorate Office (ADB)** **SASEC Highway Improvement Project-** Project Preparatory Consultant (SHIP-PPC) ADB Loan No: 3722-NEP	**CONSULTANT:** Soosung Engineering Co. Ltd, Korea in association with ERMC P (Ltd) and Tech Studio of Engineeering Nepal	**IMPLEMENTING AGENCY:** **DOR, DCID** **ROAD NAME:** **East West Highway (H01)** **Butwal - Gorusinghe Section**	**SHEET TITLE:** Layout Plan of **Dry Nala Box Bridge_B - (6X 6.2)** (46/H001/303 A,B) CH-607+844.5	**SCALE:** As Shown		**NAME**	**SIGNATURE**	**REV NO.**	**DESCRIPTION**	**DATE:** Nov.2022 **DWG.NO.:** 303_Dry Nala **SHEET NO.:** 09/10
					Designed by:	P.Shrestha				
					Checked by:	P. Upadhyaya				
					Approved by:	Dr. T.H.Choi				

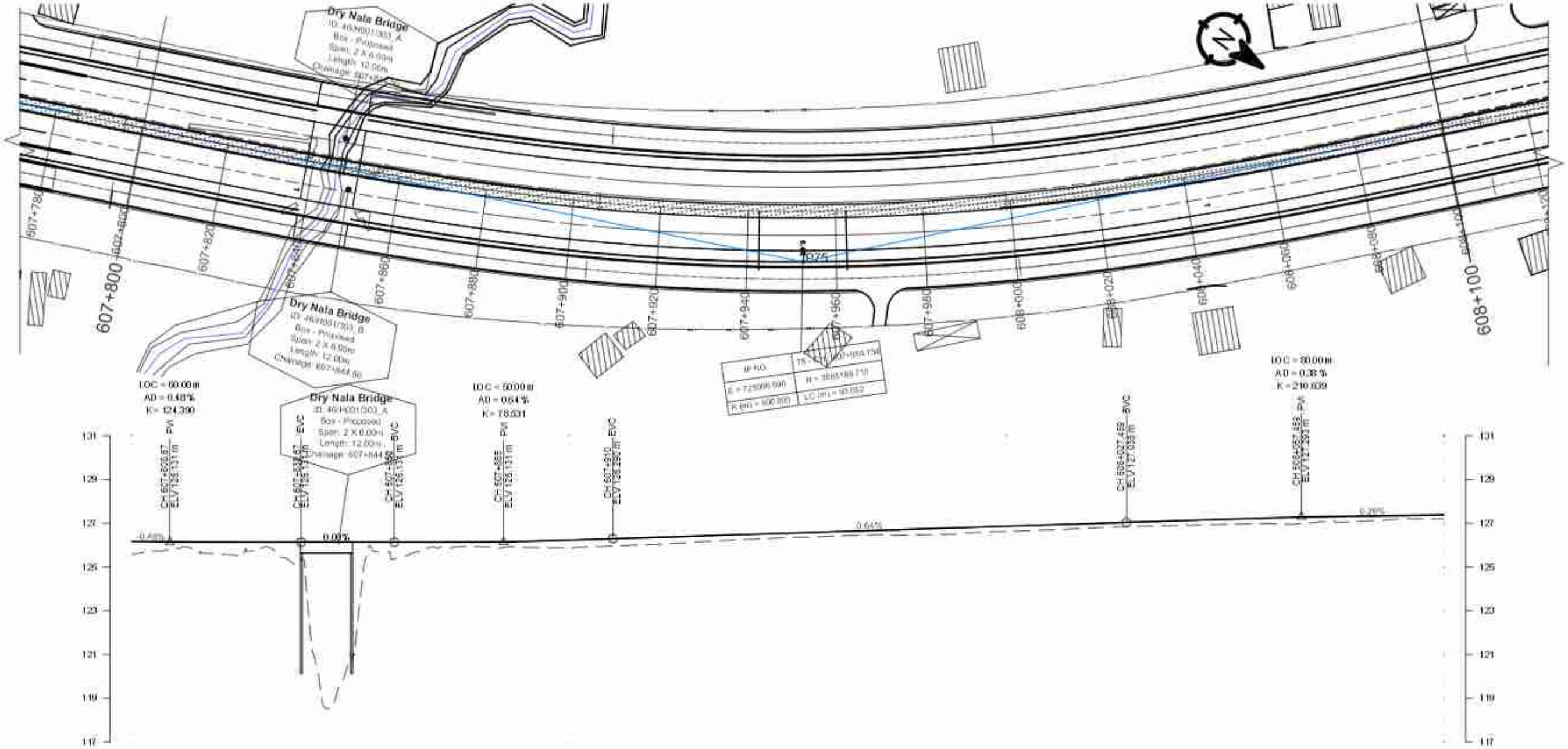

DESIGN LEVEL(m)	128.191, 128.164, 128.145, 128.134, 128.131, 128.131, 128.131, 128.137, 128.156, 128.188, 128.233, 128.290, 128.354, 128.418, 128.481, 128.545, 128.609, 128.672, 128.736, 128.800, 128.863, 128.927, 128.991, 127.054, 127.114, 127.169, 127.220, 127.266, 127.307, 127.343, 127.375
EXISTING LEVEL(m)	128.580, 128.637, 128.685, 128.692, 128.780, 128.847, 128.878, 128.865, 128.932, 128.886, 128.868, 128.961, 128.038, 128.151, 128.254, 128.341, 128.404, 128.474, 128.484, 128.537, 128.628, 128.702, 128.784, 128.858, 128.898, 128.943, 128.982, 127.026, 127.081, 127.188, 127.209
HORIZONTAL ALIGNMENT RIGHT	
HORIZONTAL ALIGNMENT LEFT	IP-75 R=500.00 — IP-75 R=500.00
SUPER ELEVATION	T — 6.44 — T; 607+600, 607+842.668, 607+862.337, 608+100
CHAINAGE(Km)	607+800, 607+810, 607+820, 607+830, 607+840, 607+850, 607+860, 607+870, 607+880, 607+890, 607+900, 607+910, 607+920, 607+930, 607+940, 607+950, 607+960, 607+970, 607+980, 607+990, 608+000, 608+010, 608+020, 608+030, 608+040, 608+050, 608+060, 608+070, 608+080, 608+090, 608+100

Government of Nepal
Ministry of Physical Infrastructure and Transport
Department of Roads
Project Directorate Office (ADB)
SASEC Highway Improvement Project-
Project Preparatory Consultant (SHIP-PPC)
ADB Loan No: 3722-NEP

CONSULTANT:
Soosung Engineering Co. Ltd, Korea in association with
ERMC P (Ltd), Nepal
and
Tech Studio of Engineering

IMPLEMENTING AGENCY:
DOR, DCID

ROAD NAME:
East West Highway (H01)
Butwal - Gorusinghe Section

SHEET TITLE:
Plan And Profile of Dry Nala Box Bridge CH 607+800 - CH 608+100

SCALE:
Vertical Scale: 0 2 4 6m
Horizontal Scale: 0 10 20 30m

	NAME	SIGNATURE	REV.NO.	DESCRIPTION
DESIGNED BY:	S.B. Shrestha			
CHECKED BY:	P. Upadhyaya			
APPROVED BY:	Dr. T.H.Choi			

DATE: September, 2022
DWG.NO.: 303_Dry Nala
SHEET NO.: 10/10

Government of Nepal

Ministry of Physical Infrastructure and Transport

Department of Roads

Project Directorate (ADB)

Implementing Agency : DOR, DCID

Project Preparatory Consultants

Under

SASEC Highway Improvement Project (SHIP-PPC)

(ADB Loan No: 3722 Nep)

Contract No. SHIP/PPC/2020/02

Pahila River Bridge(46-H001-304_A)

St. Ch : 610+968.43 ~ End Ch : 611+021.57

Detailed Drawing

Butwal - Gorusinghe Sector

November,2022

CONTENTS

S.No.	DESCRIPTION	DWG. NO	NO. OF SHEETS
1.	General Notes.	1 - 2	2
2.	Topographic Map.	2.1	1
3.	General Arrangement.	3-4	2
4.	Bore Logs.	5	1
5.	Detail of Superstructure.	6	1
6.	Reinforcement Details of Slab.	7	1
7.	Reinforcement Details of Main Girder .	8	1
8.	Anchorage Details.	9	1
9.	Bar Bending Schedule of Slab & Main Girder.	10	1
10.	Abutment Details.	11	1
11.	Reinforcement Details of Abutment.	12	1
12.	Bar Bending Schedule.	13	1
13.	Reinforcement Details of Abutment Piles.	14	1
14.	Plan of Pier.	15	1
15.	Reinforcement Details of Pier Cap.	16	1
16.	Barbending Schedule of Pier Cap.	17	1
17.	Reinforcement Details of Abutment Pile.	18	1
18.	Reinforcement Detail of Approach Slab.	19	1
19.	Miscellaneous Detail.	20-21	2
20.	River Training Work.	22	1
21.	Plan & Profile.	23-24	2
22.	Cross Section.	24.1-24.2	2
23.	Layout Plan.	25-26	2

GENERAL NOTES

General

- Metric system of measurement is used in all drawings. Elevation and Stations are shown in Meter and all other dimensions are in Millimeters, except indicated otherwise.
- In case of contradictions, specific notes on respective sheet shall supersede the General Notes
- No dimensions shall be scaled from the drawings. Only written dimensions shall be followed. Any doubtful matter in the drawings shall be brought to the attention of the engineer-in-charge for any corrections before the execution of the works.

Design Notes

The design codes followed:
For RCC and PSC concrete - IRC:112-2020
For loads and stresses - IRC:6-2017
For substructure and foundations - IRC:78-2014
For seismic design - IRC:SP:114-2018. Seismic zone V. Importance factor 1.2

Design live loads:
For urban area bridges
Case 1 - 3 lanes of class A + pedestrians; 1 lane of class A + 1 lane of class 70R + pedestrians
Case 2 - 4 lanes or class A; 2 lanes of class A + 1 lane of class 70R. No pedestrians
For non-urban area bridges
Case 1 - 2 lanes of class A + pedestrians; 1 lane of class 70R + pedestrians
Case 2 - 3 lanes of class A; 1 lane of class A + 1 lane of class 70R. No pedestrians.

Notes on Concrete

In General the grade of concrete to be used shall be as follows:
(**unless otherwise specified in the respective drawing sheets**)

For superstructure deck slab, wearing course, crash barriers:	M30
For raised footpaths:	M25
For main girders and cross girders of superstructure with PSC girders:	M45
For main girders and cross girders of superstructure with RCC girders:	M30
For substructure: Abutment stem, ballast wall, stoppers, bearing pedestals, pier cap, pier stem and pile caps:	M30
For bored and cast in situ piles:	M35
For leveling course:	M15

The maximum size of aggregate shall be as per IRC:112-2020, clause 18.4.4.2

Admixture to the concrete

To improve workability and/or increase initial setting time of concrete and cement grout, admixture conforming to IS:9103 and ASTM C-494, (Type F - High Range Water Reducing admixture) can be added in appropriate dosage, subject to their satisfactory proven use.

Clear Cover to reinforcement (unless otherwise specified in the respective drawing sheets)

Reinforcement bars of all components of the superstructure:	40mm
Prestressing ducts or strands in superstructure:	75mm
All components of abutment, pier, pile caps and piles (except stoppers and bearing pedestals):	75mm
Bearing pedestals and Stoppers:	50mm

Cover shall be ensured with the use of properly sized cement concrete blocks which can be secured to the re-bars or other devices approved by the engineer-in-charge. Use of loose stones or wooden pieces is not permitted.

Notes on Reinforcement

- All reinforcing steel bars shall be High Strength Deformed bars with grade Fe500 conforming to IS:1786
- Laps and Splices shall conform to IRC:112-2020, Clause 15.2.5. Use of mechanical coupler is permitted upon approval by the engineer.

Notes on Prestressing

- Prestressing strands shall be Class-2, uncoated 7 ply, low relaxation type with ultimate tensile stress 1862 N/mm², conforming to IS:14268.
- The diameter of strands, their number in a tendon and the total jacking force to be applied is specified in the respective drawing sheet. All the initial and long term losses are already incorporated in design.
- Corrugated HDPE Sheathing ducts shall be used with the minimum internal diameter not less than three times the cross sectional area of the tendon. The wall thickness and other properties of the sheathing shall be as per IRC:112-2020, clause 13.4.3
- The specified profile and the alignment of the ducts shall be strictly maintained by properly securing the ducts to the re-bars. If required, pieces of re-bars can be added or the re-bars slightly repositioned or bent to maintain the profile and alignment, with approval of the engineer-in-charge.
- The jacking equipment shall be fitted with appropriate force measuring device and shall be regularly checked and calibrated as prescribed by the manufacturer.
- Jacking shall be done from both ends simultaneously and gradually, recording the elongation both sides. The expected final elongation mentioned in the respective drawings sheet is based on modulus of elasticity of the strands (Es) equal to 1.95x10^5 MPa. If the Es of supplied strands is different then the elongation values shall be recalculated by multiplying the Design values of elongation by the ratio of Design Es / Actual Es.
- In case the total elongation is not achieved at the prescribed jacking force, the jacking operation can be continued until the force reaches the maximum allowable value. If the required elongation is achieved at jacking force lower than the prescribed value, the jacking operation shall continue until the prescribed force is reached, provided the Sum of the additional elongations thus achieved is not more than 5% of the sum of the prescribed elongations.
- In adverse condition to any of the cases above, the jacking operation shall be stopped, the tendons removed and this matter reported to the engineer-in-charge for further instruction. The jacking force should NEVER exceed the Maximum allowable value.

Grouting

- The tendons which satisfy the above conditions shall be grouted properly, ensuring the duct is free of any foreign material and there is no leak or damage around the joints between the anchors and the ducts. Grouting can be normally done immediately after successful completion of tensioning operations and shall not be delayed by more than 5 days of tensioning of the cables.
- The grout shall be prepared with Ordinary Portland cement with suitable expansive admixture approved by the engineer. Admixture containing chloride and nitrate are not permitted. The water/cement ratio shall not be more than 0.48. Retempering of the grout shall not be permitted. The grout shall be mixed with mechanical mixers and shall be continuously kept agitated until pumped in.

Stages and sequence of Prestressing

- The Precast composite girders shall be prestressed in two stages. The specified number of the tendons shall be tensioned in the prescribed sequence shown in the respective drawing sheet.
- The remaining tendons shall be tensioned after specified days after casting of the deck slab, in the sequence shown in the respective drawing sheet.
- The prestressing of the precast girder shall be started only after confirming that the cube specimen has achieved 100% of the prescribed compressive strength. No early prestressing allowed.

Construction methodology and sequence for Precast Prestressed Composite superstructure

- The main girders are be precast near the bridge site at suitable location (approach road or dry river bed, if available) on well prepared casting yard. The choice of location also depends upon the equipment available for lifting or launching the girders. After completion of the prestressing works the girders are either lifted by suitable cranes or pushed/launched with the help of rails and jacks or launching girders and placed carefully over the already completed substructure. Care shall be taken that all the preparatory works for the bearings are done properly before the launching/placing of the girders.
- Lifting shall be done only by the hooks provided at both ends. In case of jacking the jacking points shall be only just under the location of the hooks. No support, lifting or jacking is allowed at any other section of the girder
- After placing all the main girders and finishing the works on the bearings, the formwork for deck slab and cross girders are prepared. All the formwork for deck slab and cross girders shall be supported by the main girders. The main girders shall remain un-propped during casting of the deck slab. Similarly there shall be no false-work or props from the ground or part of substructure during casting of the deck slab.
- The Contractor shall ensure stability of the girders during all stages of construction.
- Dimensional tolerances for the precast girders shall be as per IRC:SP:71-2018, Clause 4.10. If not prescribed otherwise, transportation and handling operation shall follow the guidelines in Clause 4.9 of the same documents.
- The prescribed time-line for construction of the superstructure is as follows

Prestressing of Precast Girder only (Stage 1)	After 28 days of casting or confirming 100% compressive strength of concrete
Lifting/Launching of the Girder	Within 14 days of first stage prestressing
Casting of the Deck Slab	Within 14 days of placing of girder over substructure
Prestressing of Girder (Stage 2)	After 14 days of casting of deck slab
Casting of Footpath, Crash Barrier, Wearing Course etc	Preferably within 7 days but not later than 14 days of Second stage prestressing

Deviation from the above time-line is subject to approval by the engineer. No other vehicle except the concreting apparatus are allowed on the deck until the deck slab has attained its full specified strength.

Construction methodology for Cast-in-situ RCC superstructure

- Construction of Monolithic cast in situ RCC superstructure shall follow the standard practices. The falsework for the girders and deck slab are supported on the ground and removed after specified time period.

Notes on Bearings

- The contractor shall supply, provide and install the bearings designed according to the loadings and other relevant information provided in the drawings or BOQ.
- The dimension and number of layers of the Elastomeric bearings shown in the drawings are tentative. The bearings shall be designed, fabricated, tested and installed as per IRC:83 - 2018, Part-2 for elastomeric bearing and Part-3 for Pot-PTFE bearings, as the case applies.

Notes on Foundation and Substructure

- Standard Specifications and Special provisions to the Standard Specifications (if any) and specific notes on the drawings shall be followed for the construction of the abutments, piers and foundations.
- Backfill behind the abutment shall be places only after the concrete has achieved full 28 days strength. Heavy compaction equipment weighing more than 10 Ton shall not be used within 2.0 meters from the back of the abutment until all the works on superstructure is completed.
- The graded backfill behind the abutment shall be at a slope not steeper than 62 degrees, starting from the back of the footing. The back fill material dry density shall be within 1900 to 2200 kN/m³ and moisture content between 9 to 15%
- In case of new bridge adjacent to the existing bridge, care shall be taken not to render any damage to the elements of the existing bridge. Particular attention shall be paid to the foundation of the existing bridge. The contractor shall ensure that excavation for the foundation of the new bridge does not cause instability or settlement of the foundation of the existing bridge.
- If the existing bridge has a shallow foundation, the contractor shall protect the existing foundation by sheet piling or any other suitable means to the satisfaction of the engineer, before excavating for the foundation of the new bridge.

General Note: (For all Pile Foundation)

- Drilling/Boring works for pile is allowed only with rotary or oscillator type drilling equipment.No percussion method is allowed . Stability of borehole shall be ensured by the use of temporary casing.Use of other methods of borehole stability is subject to approval by the engineer, but in such case use of water/air/chemical jetting for boring process shall not be allowed.
- In case of drilling/boring without temporary casing,the contractor should ensure the stability and uniformity of the borehole before lowering the reinforcement cage and during concreting.
- Boring/Drilling of the piles is preferred in a staggered pattern.Boring/Drilling for any pile shall not commence before 24 hours of completion of concreting of any pile within a radius of 6 meters from its center.
- In case of drilling/boring without temporary casing , the pile shall be lined with 6mm thick permanent casing from the bottom of the pile cap down to 0.5 m below the maximum scour depth or 1.5 m whichever is larger.

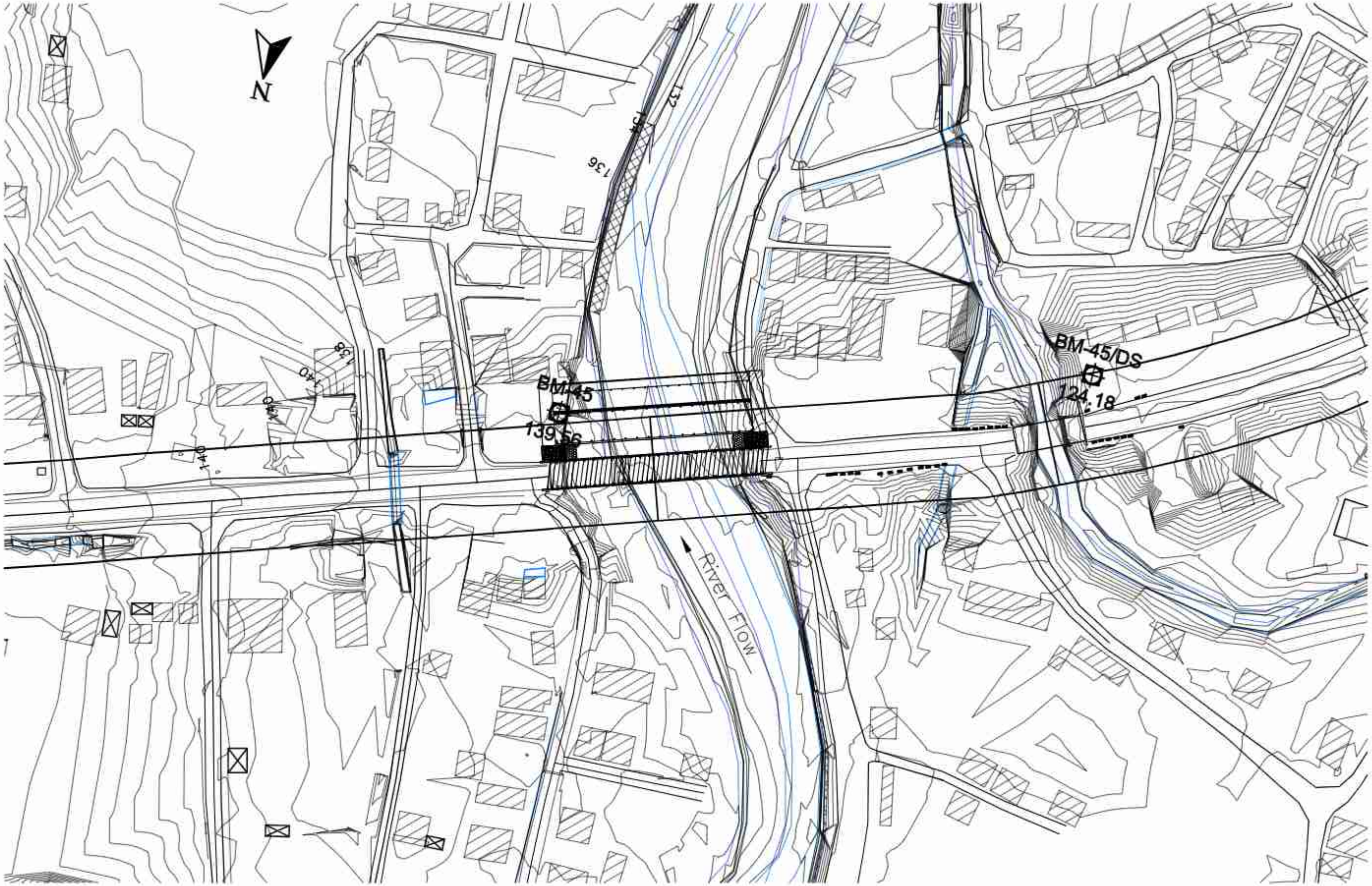

Government of Nepal Ministry of Physical Infrastructure and Transport **Department of Roads** **Project Directorate Office (ADB)** **SASEC Highway Improvement Project-** **Project Preparatory Consultant (SHIP-PPC)** **ADB Loan No: 3722-NEP**	**CONSULTANT:** Soosung Engineering Co. Ltd, Korea in association with ERMC P (Ltd) and Tech Studio of Engineeering Nepal	**IMPLEMENTING AGENCY:** **DOR, DCID**	**SHEET TITLE:**	**SCALE:**		NAME	SIGNATURE	REV NO.	DESCRIPTION	DATE: November , 2022
		ROAD NAME: **East West Highway (H01)**	Topographic Map of **Pahila Bridge** (46/H001/304_A)	1:1	Designed by:	Saroj Bhattarai				DWG.NO.: 304_Pahila
					Checked by:	P. Upadhyaya				
		Butwal - Gorusinghe Section			Approved by:	Dr. T.H.Choi				SHEET NO.: 2.1/27

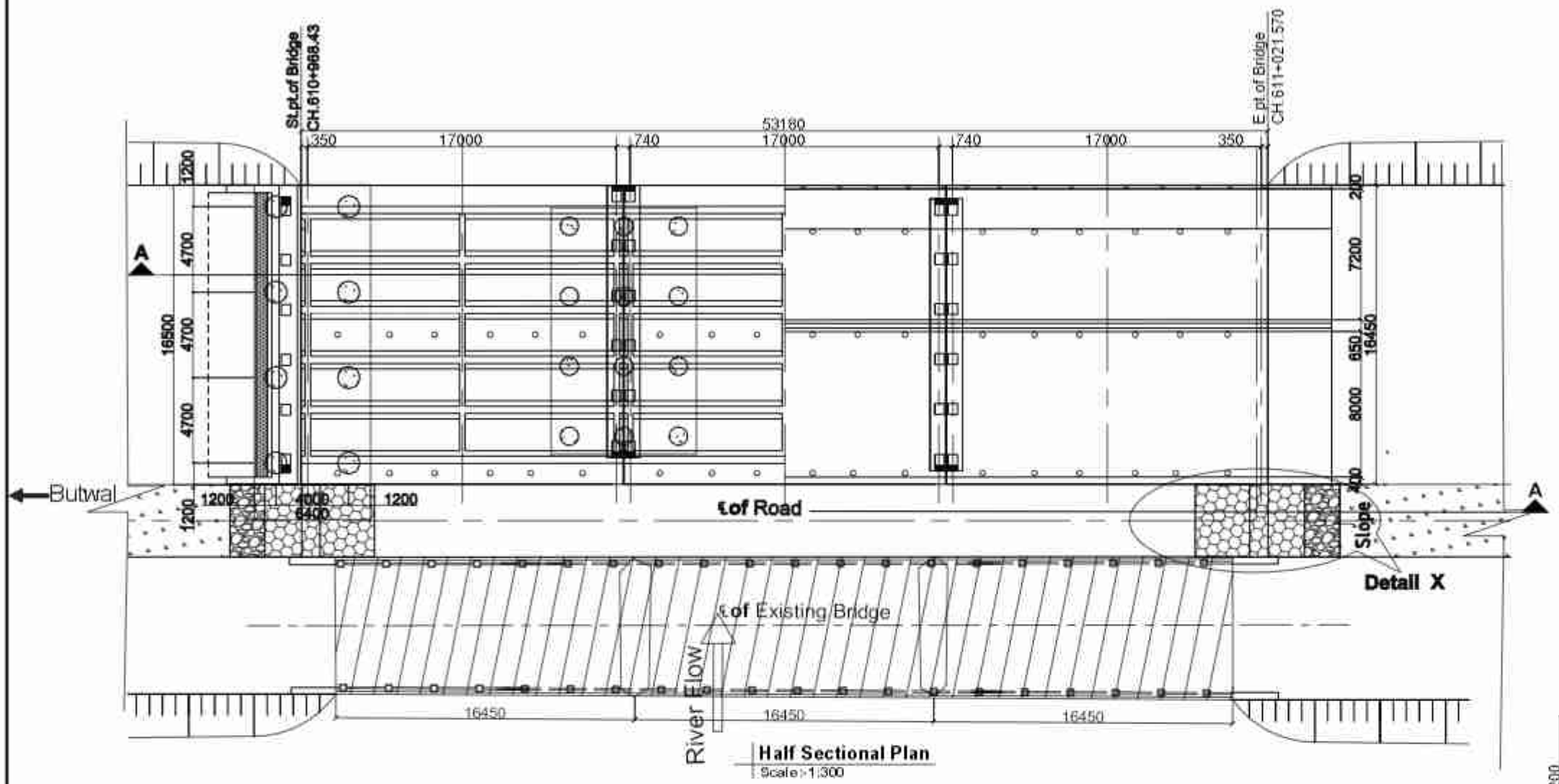

Half Sectional Plan
Scale:-1:300

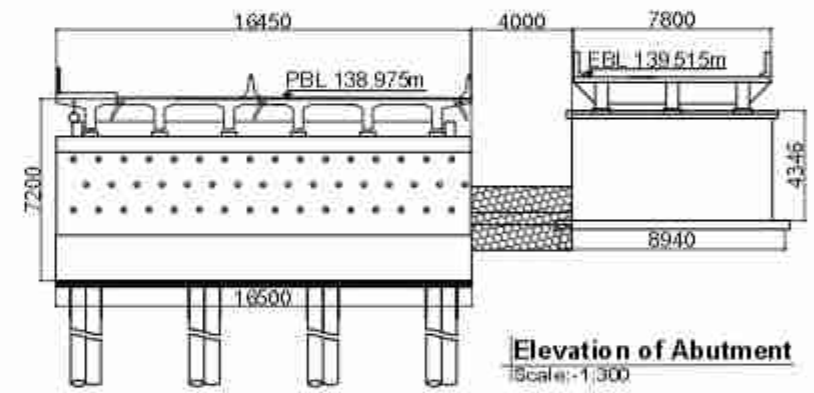

Elevation of Abutment
Scale:-1:300

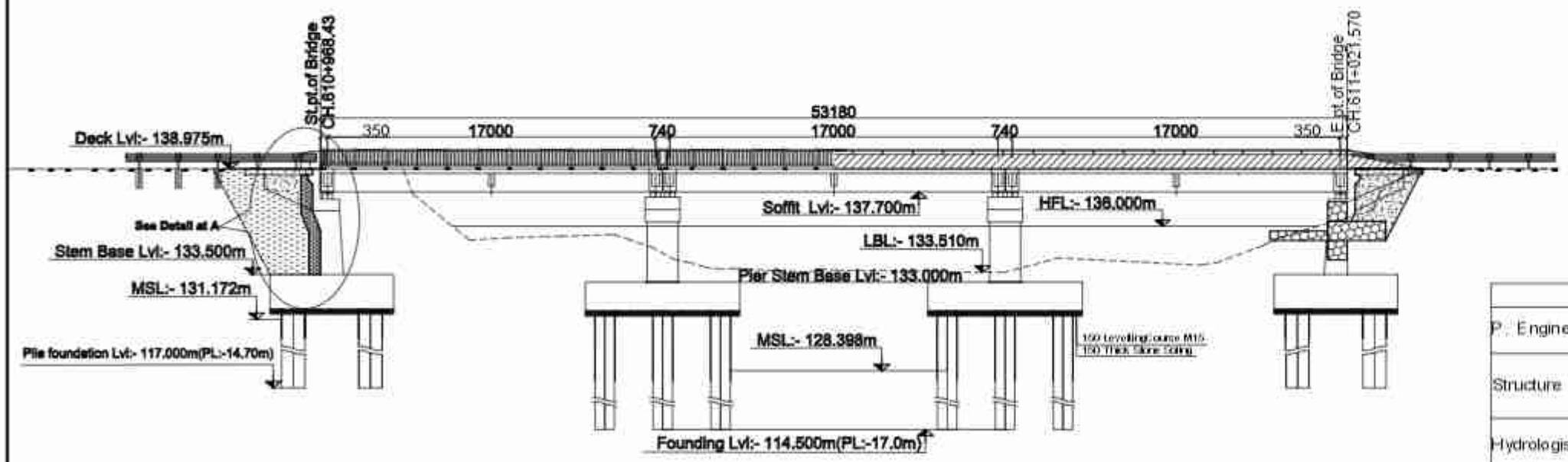

Half Sectional Elevation
Scale:-1:300

Note :-
MSL :- Maximum Scour Level
HFL :- High Flood Level
LBL :- Lowest Bed Level
RL :- Reduced Level
PL :- Pile Length

	Name(NEC Number)	Signature
P. Engineer	P. Upadhyaya (Civil A 675)	
Structure Engineer	K.P.Wagle(Civil A 127) / P.Shrestha(Civil A 676) / S.Bhattarai (Civil A 904)	
Hydrologist	Dr. P.C. Jha(Civil A 166) / S. Adhikari (Civil A 408)	
Geotechnical Engineer	A. Adhikari(ka 199) / Dr. V. R. S. Shahi	

Government of Nepal
Ministry of Physical Infrastructure and Transport
Department of Roads
Project Directorate Office (ADB)
SASEC Highway Improvement Project-
Project Preparatory Consultant (SHIP-PPC)
ADB Loan No: 3722-NEP

CONSULTANT:
Soosung Engineering Co. Ltd,
Korea
in association with
ERMC P (Ltd)
and
Tech Studio of Engineeering
Nepal

IMPLEMENTING AGENCY:
DOR, DCID

ROAD NAME:
East West Highway (H01)
Butwal - Gorusinghe Section

SHEET TITLE:
General Arrangement
of
Pahila Bridge
(461-I001/304_A)

SCALE:
1:300

	NAME	SIGNATURE	REV NO.	DESCRIPTION
Designed by:	Saroj Bhattarai			
Checked by:	P. Upadhyaya			
Approved by:	Dr. T.H.Choi			

DATE: November , 2022
DWG.NO.: 304_Pahila
SHEET NO.: 03/26

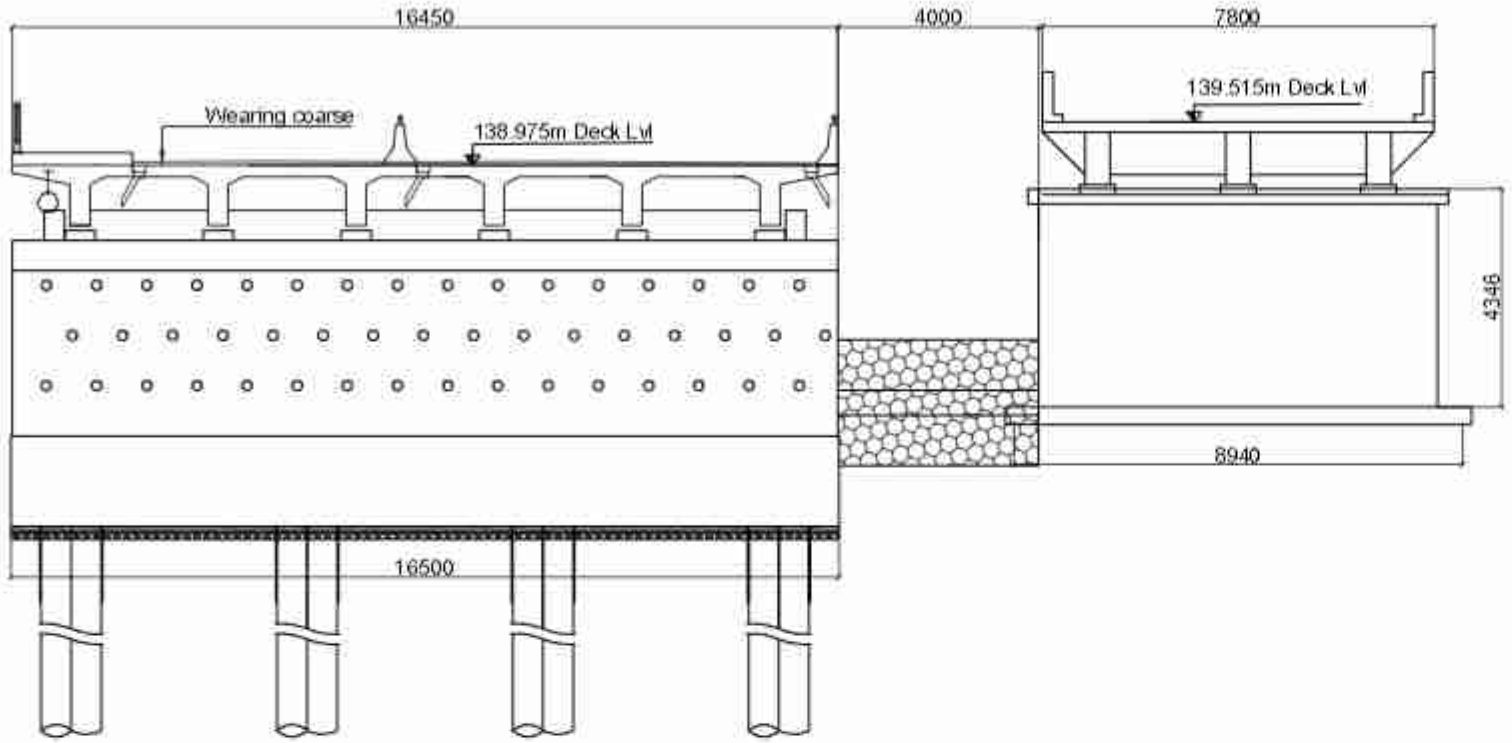

Elevation of Abutment
Scale:-1:150

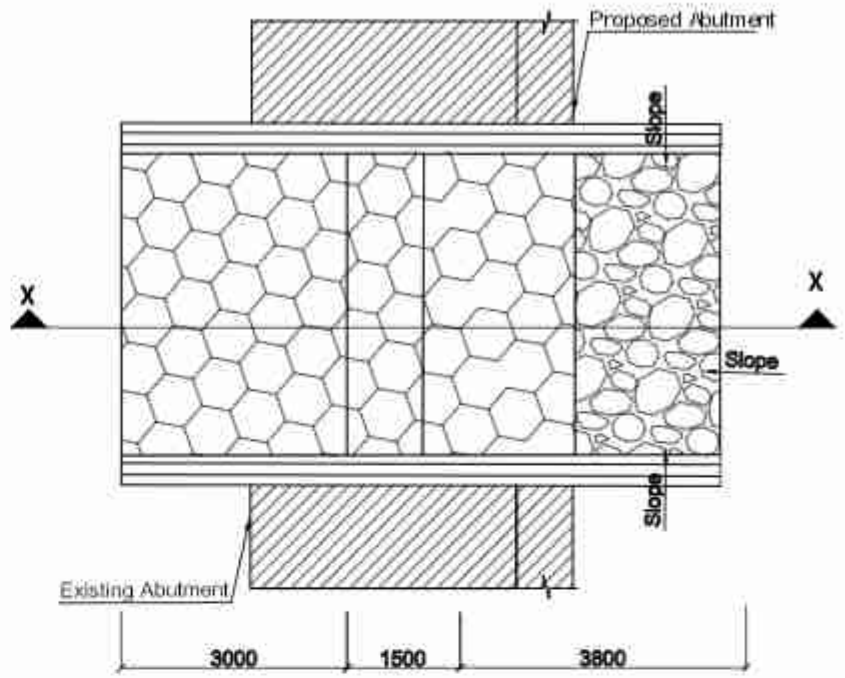

Detail Plan of X
(Transition Between Approch Embankmant)
Scale:-1:100

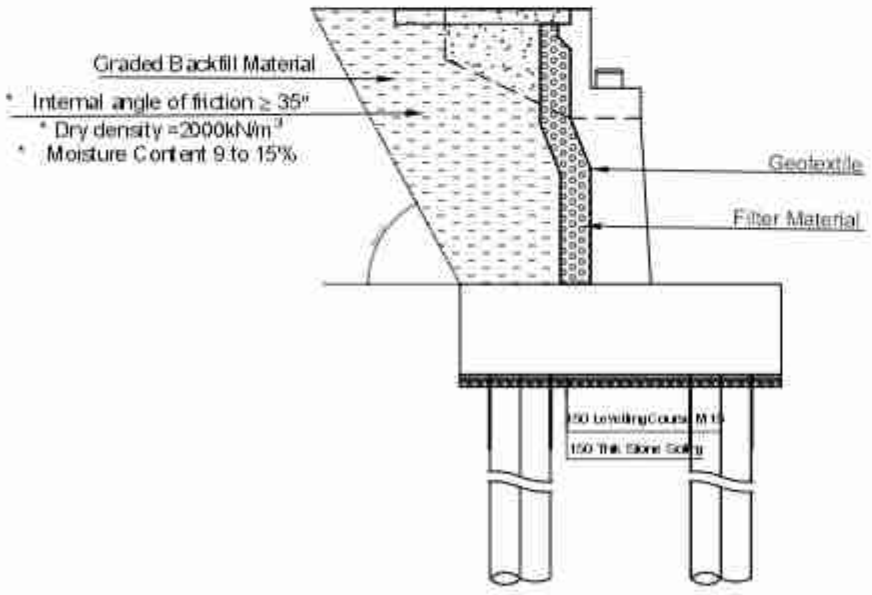

Detail of A
Scale:-1:150

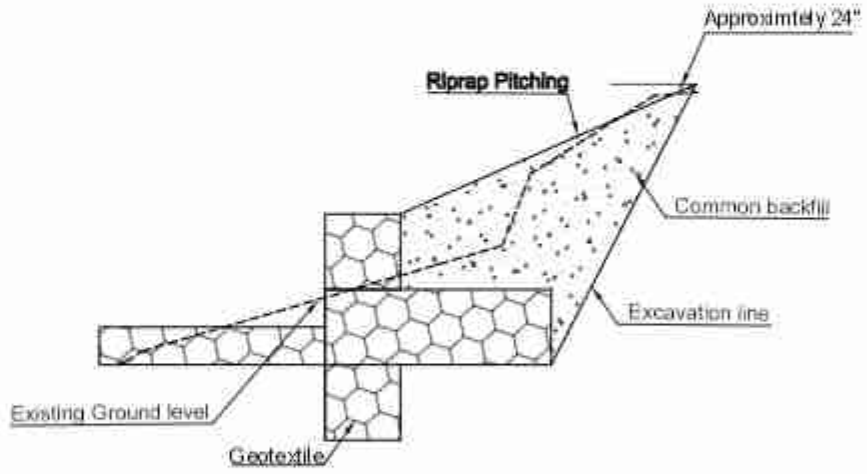

Section at X-X
Scale:-1:100

	Name(NEC Number)	Signature
P. Engineer	P. Upadhyaya (Civil A 675)	
Structure Engineer	K.P.Wagle(Civil A 127) / P.Shrestha(Civil A 676) / S.Bhattarai (Civil A 904)	
Hydrologist	Dr. P.C. Jha(Civil A 166) /S. Adhikari (Civil A 408)	
Geotechnical Engineer	A. Adhikari(ka 199) /Dr. V. R. S. Shahi	

Government of Nepal Ministry of Physical Infrastructure and Transport **Department of Roads** **Project Directorate Office (ADB)** **SASEC Highway Improvement Project-** **Project Preparatory Consultant (SHIP-PPC)** **ADB Loan No: 3722-NEP**	**CONSULTANT:** Soosung Engineering Co. Ltd, Korea in association with ERMC P. (Ltd) and &098-Tech Studio of Engineeering Nepal	**IMPLEMENTING AGENCY:** **DOR, DCID** **ROAD NAME:** **East/West Highway (H01)** **Butwal - Gorusinghe Section**	**SHEET TITLE:** General Arrangement of **Pahila Bridge** (46/H001/304_A)	**SCALE:** 1:300		NAME	SIGNATURE	REV NO.	DESCRIPTION	DATE: November , 2022
					Designed by:	Saroj Bhattarai				DWG.NO.: 304_Pahila
					Checked by:	P. Upadhyaya				
					Approved by:	Dr. T.H.Choi				SHEET NO.: 04/26

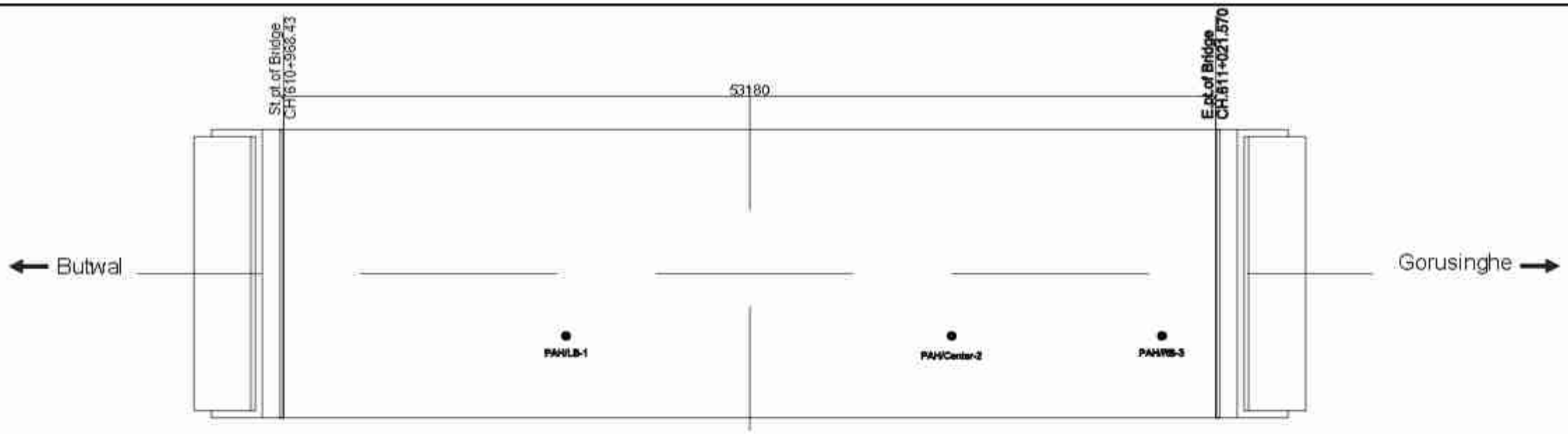

Borehole No : PAH/LB01
Easting : 83°15' 58"   Northing : 27° 42' 19.10"   Elevation, m : 135.270
Borehole No : PAH/Centre 02
Easting : 83° 15' 58.00"   Northing : 27° 42' 10.00"   Elevation, m : 132.860
Borehole No : PAH/RB03
Easting : 83° 15' 57.24"   Northing : 27° 42' 9.75"   Elevation, m : 136.545

Note :-
MSL :- Maximum Scour Level
HFL :- High Flood Level
LBL :- Lowest Bed Level
RL :- Reduced Level
PL :- Pile Length

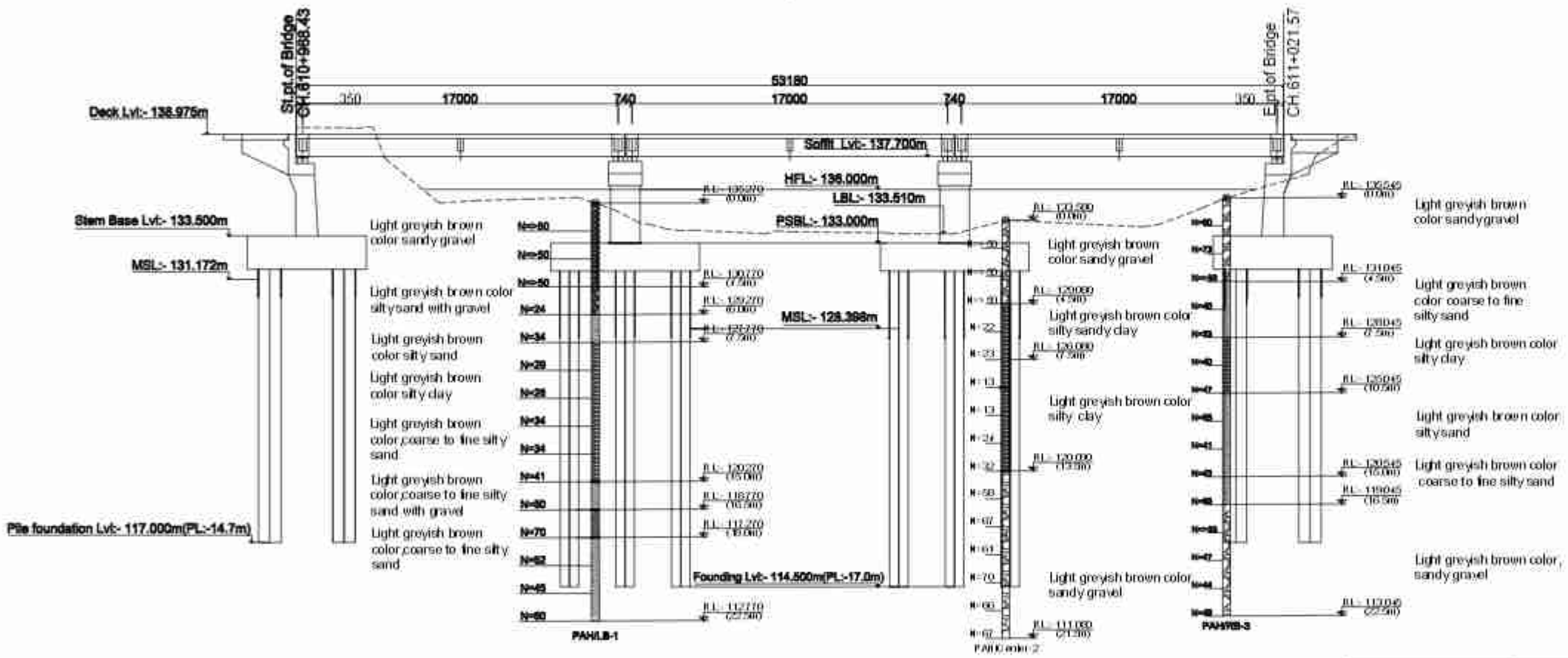

Bore Log Detail
Scale:-1:300

NOTE ON SUB-SOIL PROFILE
The sub-soil profile shown here is based on information obtained from the investigation bore-holes at the locations as shown The actual soil type away from the vicinity of the boreholes may differ

Location	Design Pile Length m	Design Working load on pile (non - seismic casse)kn	Allowable Bearing Capacity on pile (Scour case)kn	Allowable Bearing Capacity of the Pile (Non Scour case)kn
Abutment	14.7	1576	2835	3019
Pier	17	894	1673	1706

	Name(NEC Number)	Signature
P. Engineer	P. Upadhyaya (Civil A 675)	
Structure Engineer	K.P.Wagle(Civil A 127) / P.Shrestha(Civil A 676) / S.Bhattarai (Civil A 904)	
Hydrologist	Dr. P.C. Jha(Civil A 166) /S. Adhikari (Civil A 408)	
Geotechnical Engineer	A. Adhikari(ka 199) / Dr. V. R. S. Shahi	

Government of Nepal Ministry of Physical Infrastructure and Transport **Department of Roads** **Project Directorate Office (ADB)** **SASEC Highway Improvement Project-** **Project Preparatory Consultant (SHIP-PPC)** **ADB Loan No: 3722-NEP**	**CONSULTANT:** Soosung Engineering Co. Ltd, Korea in association with ERMC P. (Ltd) and Tech Studio of Engineeering Nepal	**IMPLEMENTING AGENCY:** **DOR, DCID** **ROAD NAME:** **East West Highway (H01)** **Butwal - Gorusinghe Section**	**SHEET TITLE:** Bore Log of **Pahila Bridge** (46/H001/304_A)	**SCALE:** 1:200		NAME	SIGNATURE	REV NO.	DESCRIPTION	DATE: November , 2022 DWG.NO.: 304_Pahila SHEET NO.: 05/26
					Designed by:	Saroj Bhattarai				
					Checked by:	P. Upadhyaya				
					Approved by:	Dr. T.H.Choi				

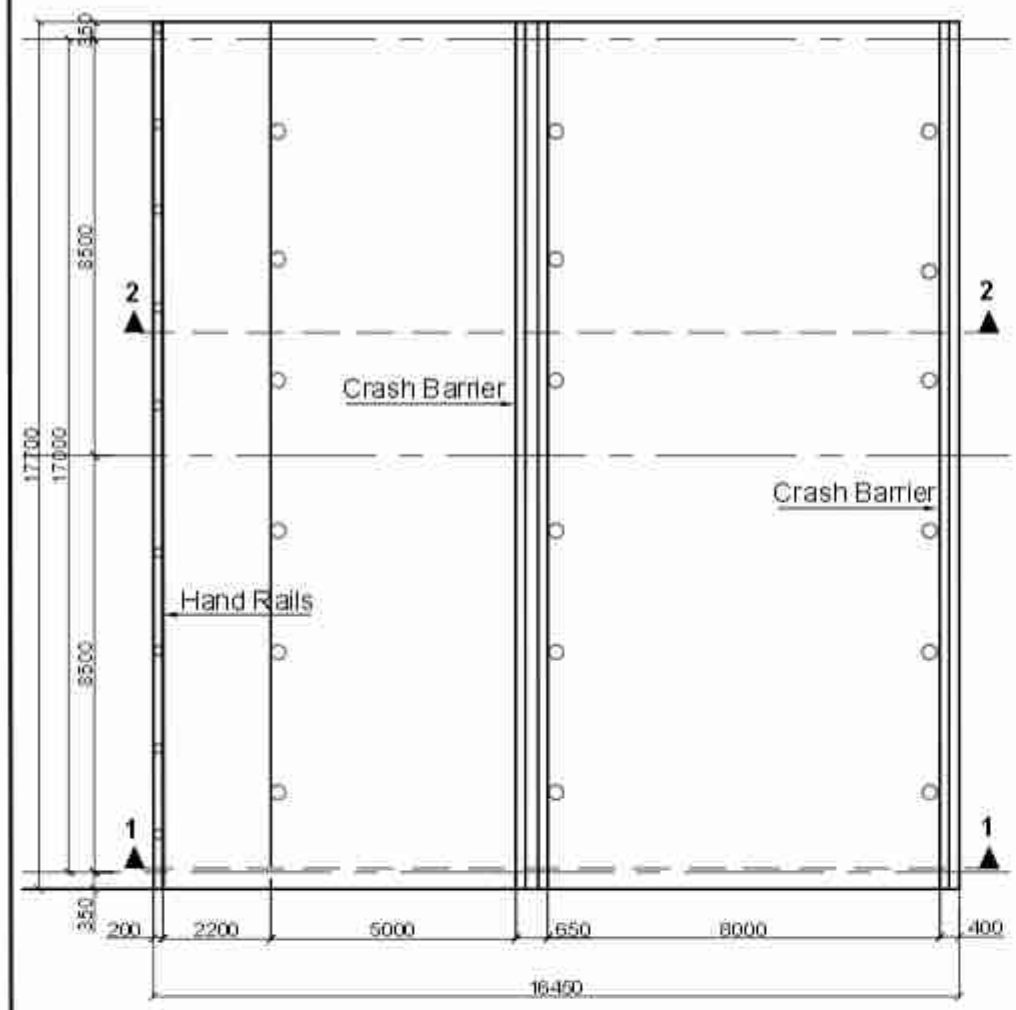

Plan Of Deck
Scale:-1:150

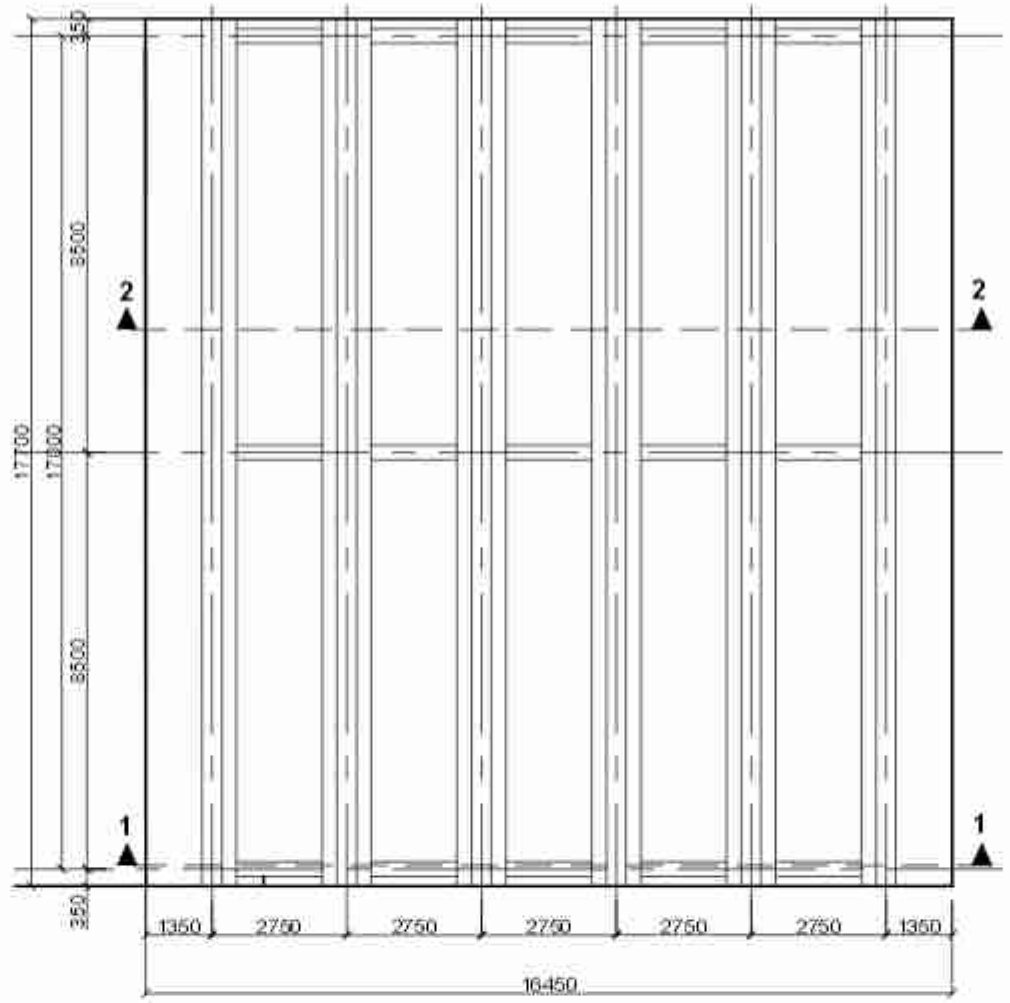

Plan Of Girder
Scale:-1:150

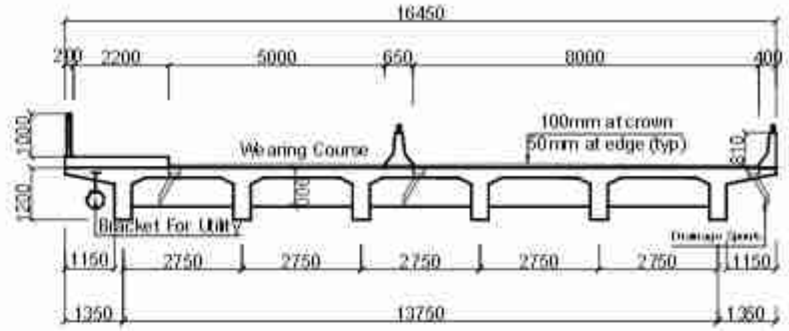

Section At 1-1
Scale:-1:150

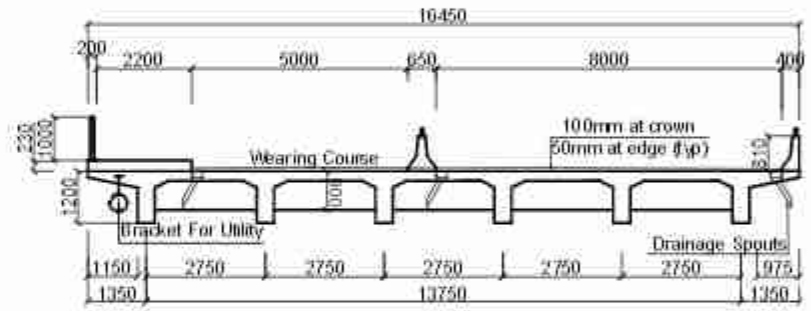

Section At 1-1
Scale:-1:150

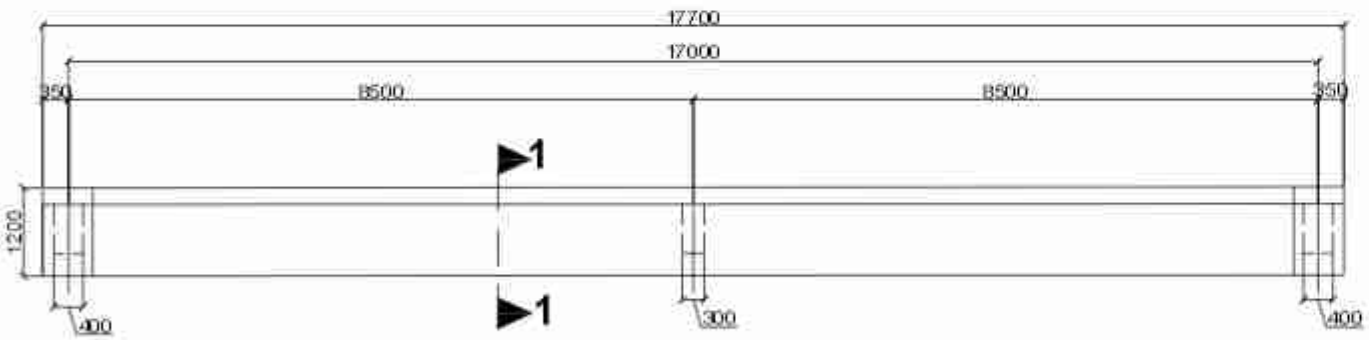

Longitudinal Sectional Elevation
Scale:-1:100

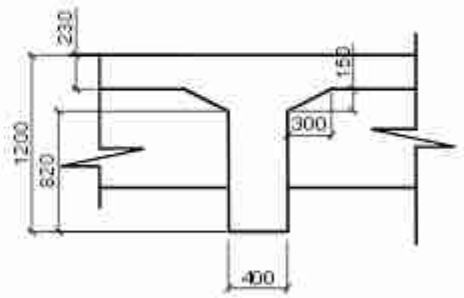

Section 1-1 Main Girder
Scale:-1:50

NOTES:
Dowel bars similar to the longitudional bars of the cross section girders shall be placed in the precast main girder before casting. The longitudional bars of the cross girder shall be lapped to the dowel bers, which shall have a lap length of 60 dia. of the corresponding bars.

NOTES:
To lift the deck for maintenance, the jacks shall be placed under the positions marked "J".

Government of Nepal Ministry of Physical Infrastructure and Transport **Department of Roads** **Project Directorate Office (ADB)** **SASEC Highway Improvement Project-** Project Preparatory Consultant (SHIP-PPC) ADB Loan No: 3722-NEP	**CONSULTANT:** Soosung Engineering Co. Ltd, Korea in association with ERMC P (Ltd) and Tech Studio of Engineeering Nepal	**IMPLEMENTING AGENCY:** **DOR, DCID** **ROAD NAME:** **East/West Highway (H01)** **Butwal - Gorusinghe Section**	**SHEET TITLE:** Detail of superstructure of **Pahila Bridge** (46/H001/304_A)	**SCALE:** As Shown		**NAME**	**SIGNATURE**	**REV NO.**	**DESCRIPTION**	**DATE:** November , 2022 **DWG.NO.:** 304_Pahila **SHEET NO.:** 06/26
					Designed by:	Saroj Bhattarai				
					Checked by:	P. Upadhyaya				
					Approved by:	Dr. T.H.Choi				

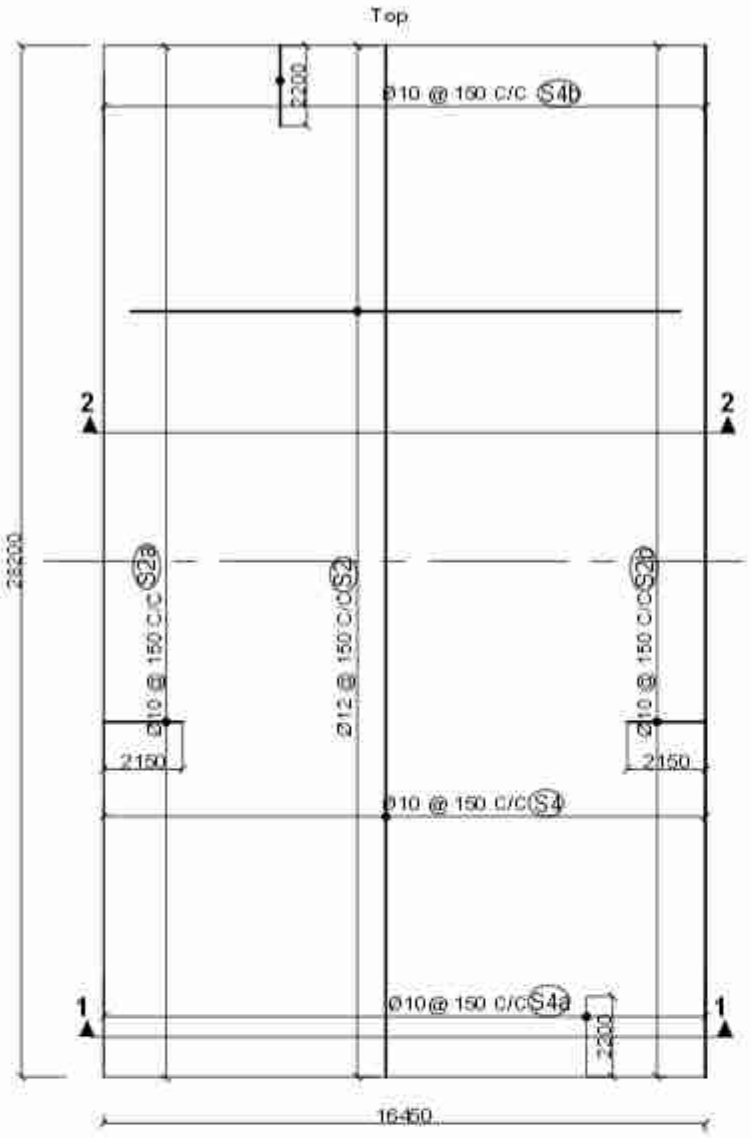

Reinforcement Details Of Deck Slab
Scale:-1:200

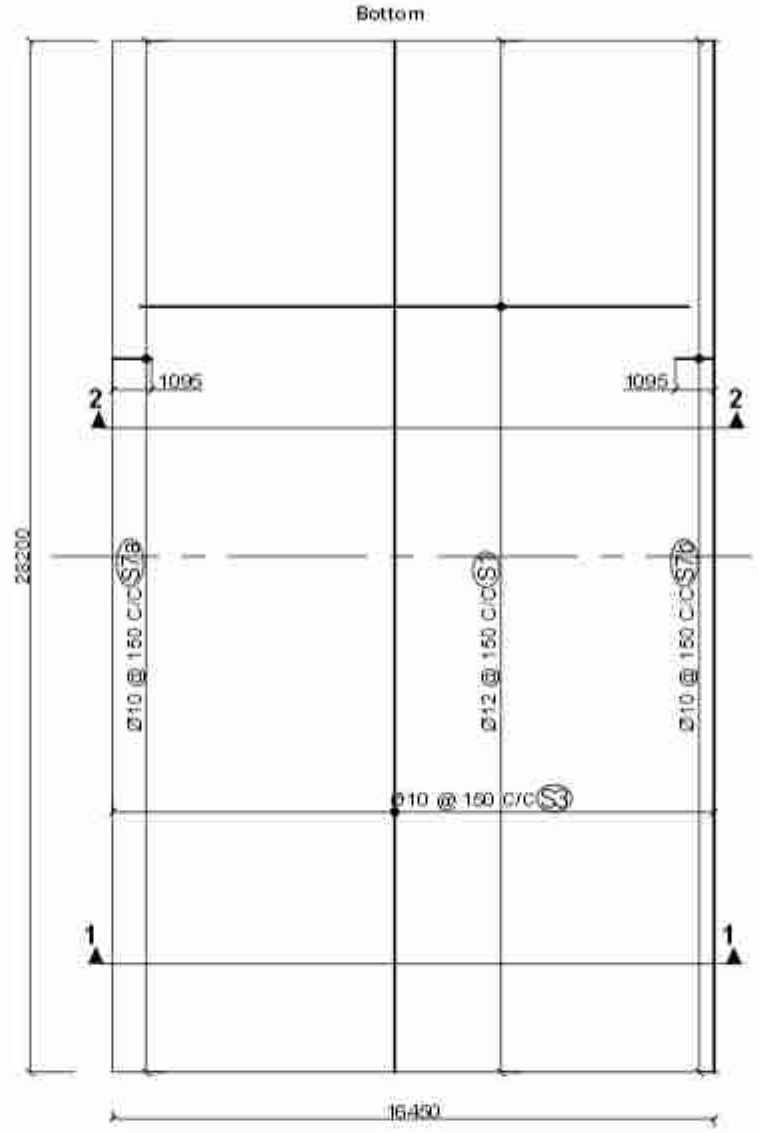

Reinforcement Details Of Deck Slab
Scale:-1:200

NOTES:
1.ON SHEAR CONNECTION:
The transverse bars of the deck slab(S2) shall be tied to vertical stirrups of the longitudinal girders.

2.TOP SURFACE OF THE MAIN GIRDER:
Surface to be roughened by wire brush immediately after initial setting.
The surface shall be properly cleaned by pressure blower prior to casting of the deck concrete

3.ON WEARING COURSE:
The level of wearing course along the longitudinal direction shall be kept horizontal throughout the length of the deck. The thickness of wearing course towards the ends along the deck shall be increased suitably to compensate for the slope due to hogging of the girder by pre stress.

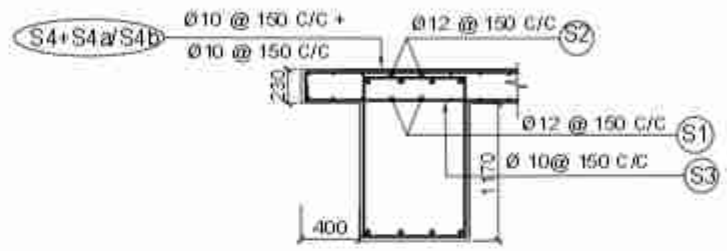

Reinforcement Details At Deck Extension
(Between The Main Girder)

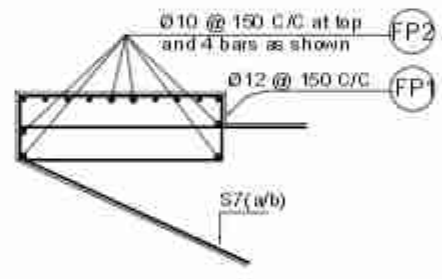

Reinforcement Details At Footpath
Scale:-1:50

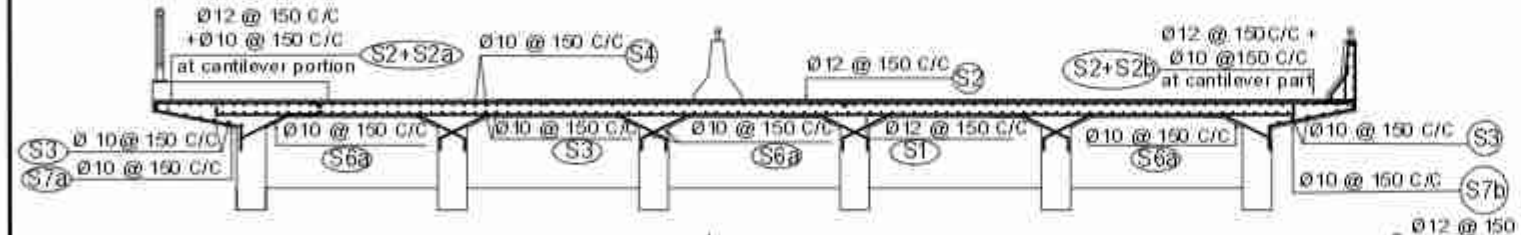

Section At 1-1
Scale:-1:100

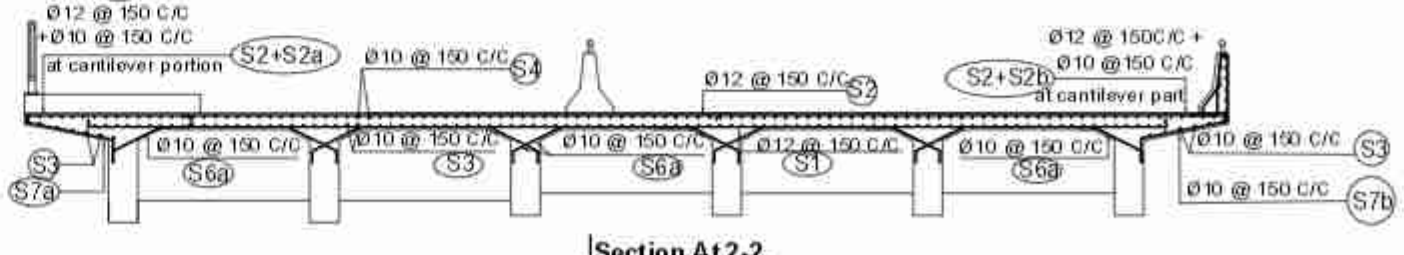

Section At 2-2
Scale:-1:100

Government of Nepal Ministry of Physical Infrastructure and Transport **Department of Roads** **Project Directorate Office (ADB)** **SASEC Highway Improvement Project-** Project Preparatory Consultant (SHIP-PPC) ADB Loan No: 3722-NEP	**CONSULTANT:** Soosung Engineering Co. Ltd, Korea in association with ERMC P (Ltd) and -Tech Studio of Engineeering Nepal	**IMPLEMENTING AGENCY:** DOR, DCID **ROAD NAME:** **East West Highway (H01)** **Butwal - Gorusinghe Section**	**SHEET TITLE:** Reinforcement Details of Slab of **Pahila Bridge** (48/H001/304_A)	**SCALE:** As Shown		NAME	SIGNATURE	REV NO.	DESCRIPTION	DATE: November , 2022
					Designed by:	Saroj Bhattarai				DWG.NO.: 304_Pahila
					Checked by:	P. Upadhyaya				
					Approved by:	Dr. T.H.Choi				SHEET NO.: 07/26

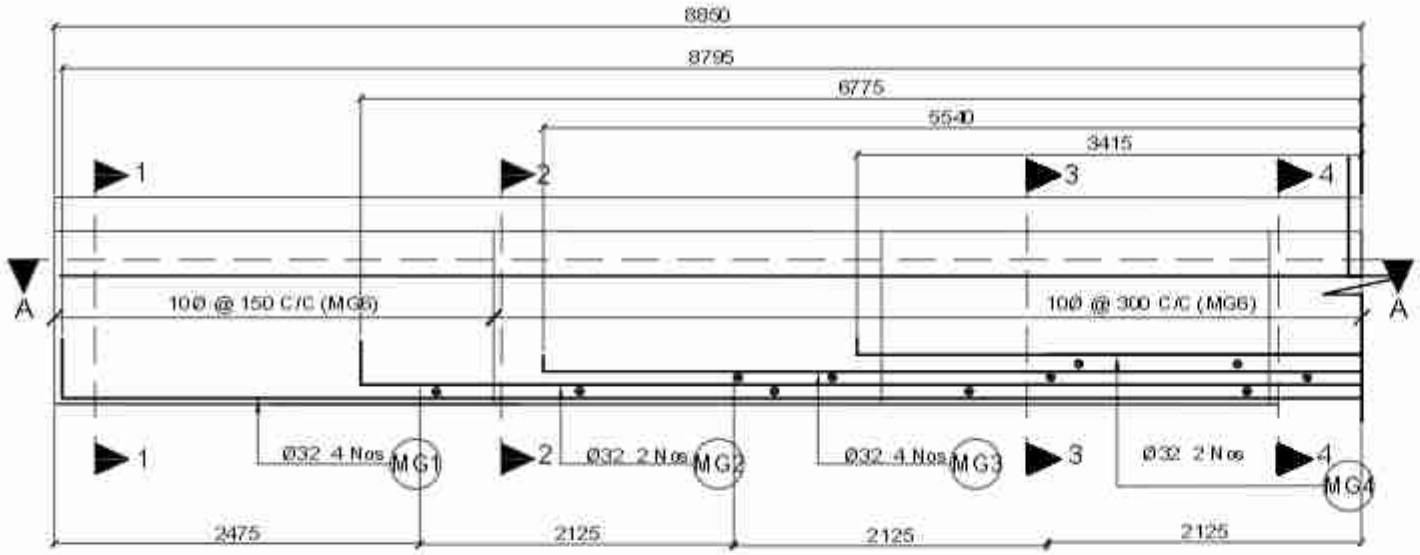

Reinforcement Details At Sectional Elevation Of Main Girder
Scale: 1:50

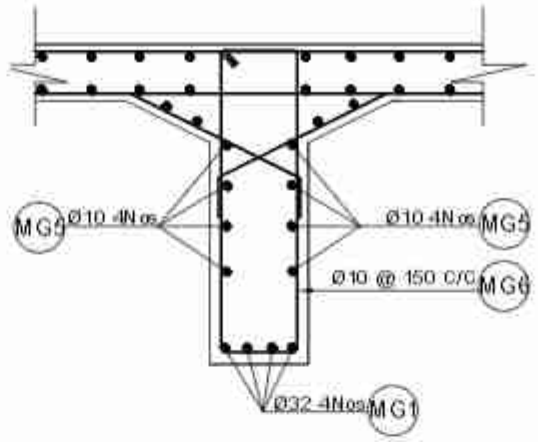

Section at 1-1
Scale: 1:30

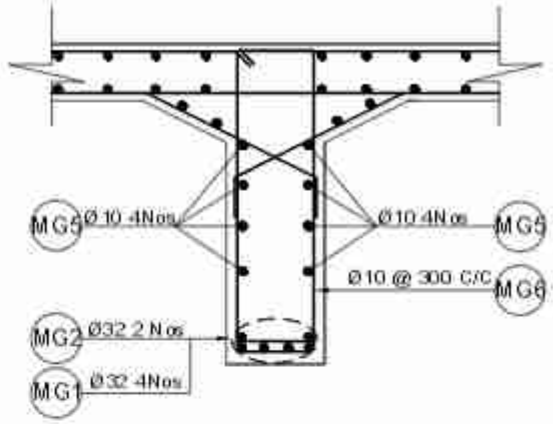

Section at 2-2
Scale: 1:30

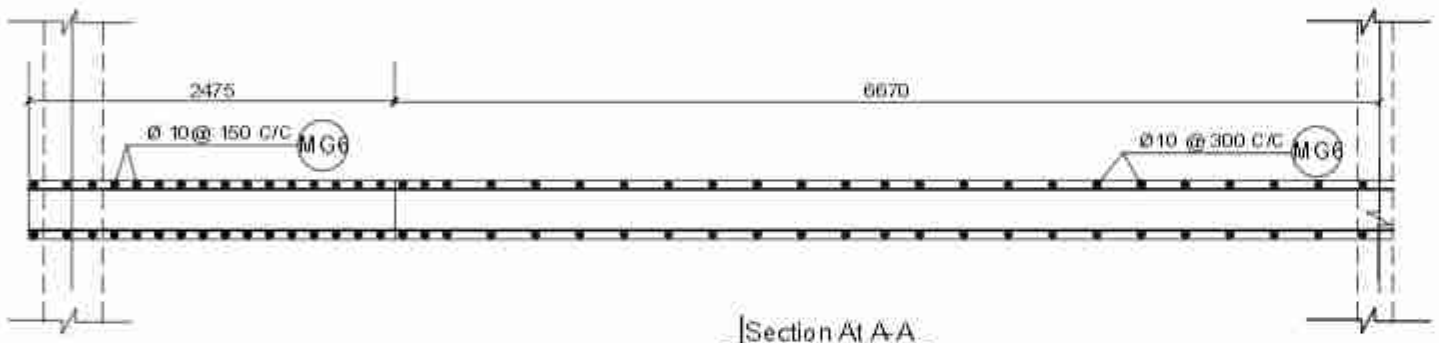

Section At A-A
Scale: 1:60

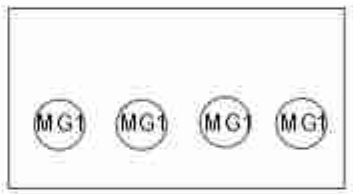

Diagram of Bar Position
Section at 1-1

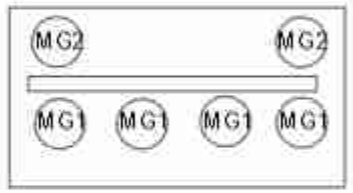

Diagram of Bar Position
Section at 2-2

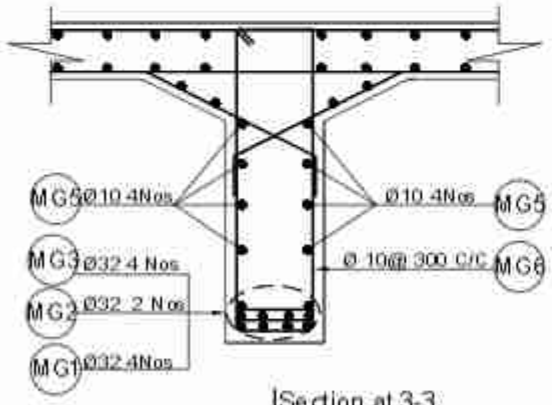

Section at 3-3
Scale: 1:30

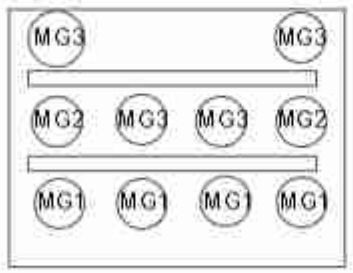

Diagram of Bar Position
Section at 3-3

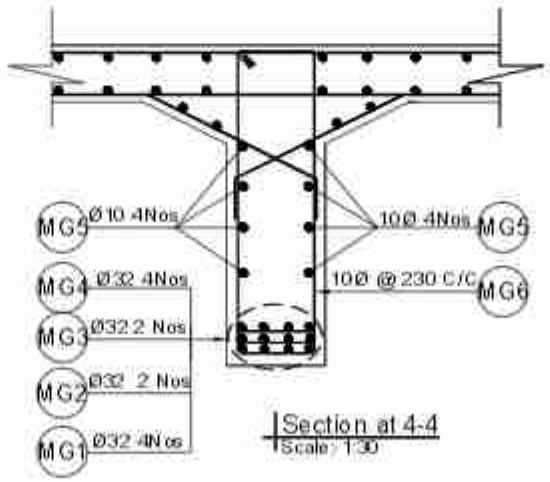

Section at 4-4
Scale: 1:30

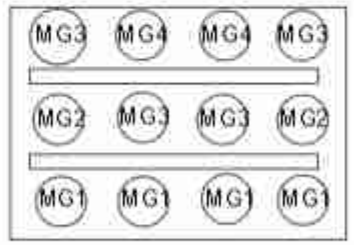

Diagram of Bar Position
Section at 4-4

Government of Nepal Ministry of Physical Infrastructure and Transport **Department of Roads** **Project Directorate Office (ADB)** **SASEC Highway Improvement Project-** Project Preparatory Consultant (SHIP-PPC) ADB Loan No: 3722-NEP	**CONSULTANT:** Soosung Engineering Co. Ltd, Korea in association with ERMC P (Ltd) and Tech Studio of Engineeering Nepal	**IMPLEMENTING AGENCY:** **DOR, DCID** **ROAD NAME:** **East West Highway (H01)** **Butwal - Gorusinghe Section**	**SHEET TITLE:** Reinforcement Details of Main Girder of **Pahila Bridge** (46/H001/304_A)	**SCALE:** As Shown		**NAME**	**SIGNATURE**	**REV NO.**	**DESCRIPTION**	**DATE:** November , 2022
					Designed by:	Saroj Bhattarai				
					Checked by:	P. Upadhyaya				**DWG.NO.:** 304_Pahila
					Approved by:	Dr. T.H.Choi				**SHEET NO.:** 08/26

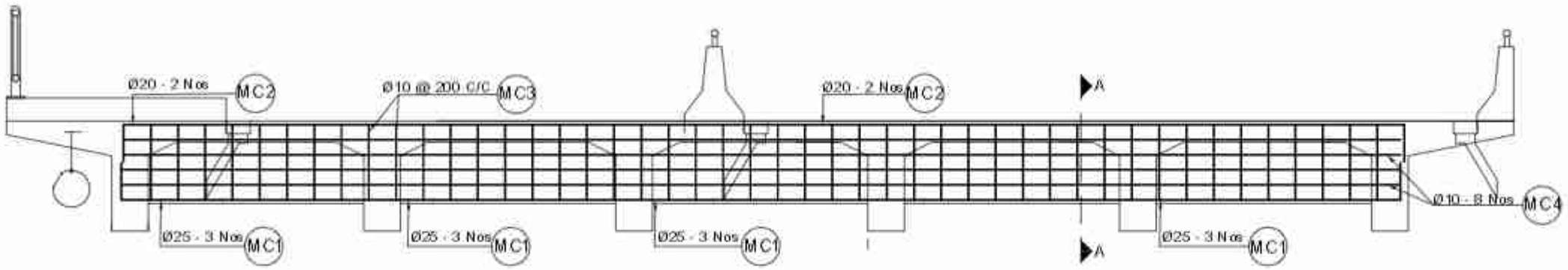

Intermediate Cross Girders
Scale : 1:50

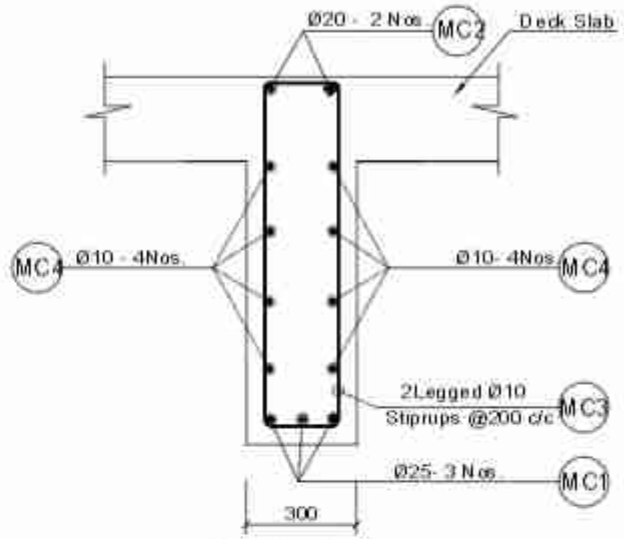

Section At A-A
Scale : 1:20

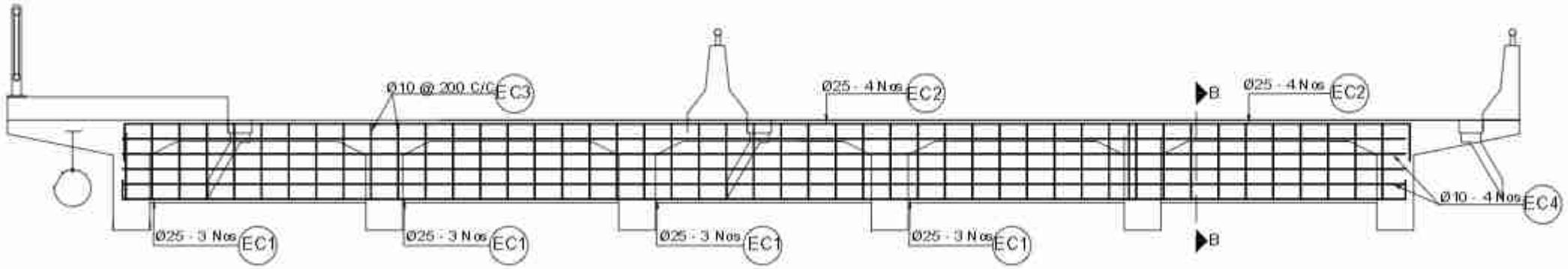

End Cross Girders
Scale : 1:50

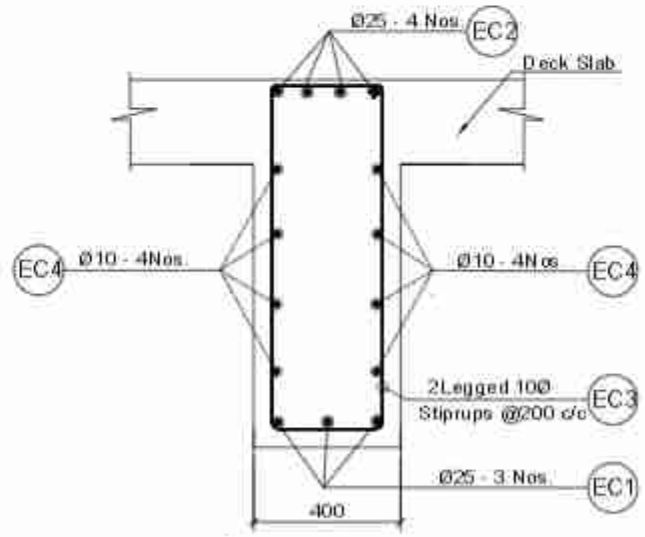

Section At B-B
Scale : 1:20

Government of Nepal Ministry of Physical Infrastructure and Transport **Department of Roads** **Project Directorate Office (ADB)** **SASEC Highway Improvement Project-** Project Preparatory Consultant (SHIP-PPC) ADB Loan No : 3722-NEP	**CONSULTANT:** Soosung Engineering Co. Ltd, Korea in association with ERMC P (Ltd) and Tech Studio of Engineering Nepal	**IMPLEMENTING AGENCY:** **DOR, DCID** **ROAD NAME** **East West Highway (H01)** **Butwal - Gorusinghe Section**	**SHEET TITLE:** Reinforcement Details of Cross Girders of **Pahila Bridge** (46/H001/304_A)	**SCALE:** As Shown		NAME	SIGNATURE	REV NO.	DESCRIPTION	DATE: November , 2022 DWG.NO.: 304_Pahila SHEET NO.: 09/26
					Designed by:	Saroj Bhattarai				
					Checked by:	P. Upadhyaya				
					Approved by:	Dr. T.H.Choi				

BAR BENDING SCHEDULE OF DECK SLAB

BAR ID	SKETCH (mm)	SPACING (mm)	Ø OF BARS (mm)	NO. OF BARS	LENGTH (m)	WEIGHT/LENGTH (kg/m)	TOTAL WEIGHT (kg)
S1	14750 100	150/7 Nos meter	12	119	14.950	0.888	1579.469
S2	16358 100	150/7 Nos meter	12	119	16.660	0.888	1749.566
S2a	100 2150 Additional Bars At left Cantilever	150 In Between S2	10	119	2.250	0.617	165.078
S2b	2150 100 Additional Bars At Right Cantilever	150 In Between S2	10	119	2.250	0.617	165.078
S3	17610 155	Med Deck 150	10	100	17.920	0.617	1104.838
		Left Cantilever 150	10	10	17.920	0.617	110.484
		Right Cantilever 150	10	10	17.920	0.617	110.484
S4	17610 155	150/7 Nos Per Meter	10	111	17.920	0.617	1226.370
S4a	155 2200 Additional Bars At Left Deck End	150 In Between S4	10	111	2.355	0.617	161.166
S4b	2200 155 Additional Bars At Right Deck End	150 In Between S4	10	111	2.355	0.617	161.166
S6a	360 733 160	150	8	1100 (10X110)	1.250	0.395	542.554
S7a	100 1095 200 Outer Side Of Left Exterior Girder	150/7 Nos Per Meter	10	238	1.400	0.617	205.431
S7b	1095 100 200 Outer Side Of Right Exterior Girder	150/7 Nos Per Meter	10	238	1.400	0.617	205.431
TOTAL EXCLUDING FOOTPATHS (in kg)							7487.116
TOTAL WEIGHT (IN METRIC TON)							7.487

BAR BENDING SCHEDULE FOR RCC MAIN GIRDER

BAR ID	SKETCH (mm)	SPACING (mm)	Ø OF BARS (mm)	NO. OF BARS	LENGTH (m)	WEIGHT/LENGTH (kg/m)	TOTAL WEIGHT (kg)
MG1	17585 400	@ 300 c/c	32	4	18.390	6.313	464.411
MG2	13550 200	@ 300 c/c	32	2	13.950	6.313	176.143
MG3	11080 200	@ 300 c/c	32	4	11.480	6.313	289.909
MG4	6830 200	@ 300 c/c	32	2	7.230	6.313	91.291
MG5	17620	@ 200 c/c	10	8	17.620	0.617	86.907
MG6	2*75 1110 310	varies (@300 c/c ,@150 c/c at support)	10	84	2.990	0.617	154.850
MG7	320 Spacer Bar	-	32	28	0	6.313	56.568
TOTAL WEIGHT IN 1 GIRDER (in kg)							1320.079
TOTAL NUMBER OF GIRDERS AND TOTAL WEIGHT (IN METRIC TON)							1.320

BAR BENDING SCHEDULE FOR END CROSS GIRDERS

BAR ID	SKETCH (mm)	SPACING (mm)	Ø OF BARS (mm)	NO. OF BARS	LENGTH (m)	WEIGHT/LENGTH (kg/m)	TOTAL WEIGHT (kg)
EC1	14045 400	@ 92 c/c	25	3	14.845	3.853	171.610
EC2	14045 400	varies(@ 138 c/c, @276 c/c)	25	4	14.845	3.853	228.813
EC3	2*60 1110 310	@ 200 c/c	10	72	2.360	0.617	104.762
EC4	14070 254 Nos each Face	300 c/c	10	8	14.070	0.617	69.398
TOTAL WEIGHT IN 1GIRDER(in kg)							574.583
TOTAL NUMBER OF GIRDERS AND TOTAL WEIGHT 2 (IN METRIC TON)							1.149

BAR BENDING SCHEDULE FOR INTERMEDIATE CROSS GIRDERS

BAR ID	SKETCH (mm)	SPACING (mm)	Ø OF BARS (mm)	NO. OF BARS	LENGTH (m)	WEIGHT/LENGTH (kg/m)	TOTAL WEIGHT (kg)
MC1	13945 400 252 Nos Each Row	@ 175 c/c	25	3	14.745	3.853	170.454
MC2	13945 400	@ 175 c/c	20	2	14.745	2.466	72.727
MC3	2*60 1110 210	@ 200 c/c	10	69	2.160	0.617	91.889
MC4	13970 252 Nos Each Face		8	8	13.970	0.395	44.099
TOTAL WEIGHT IN 1GIRDER(in kg)							379.168
TOTAL NUMBER OF GIRDERS AND TOTAL WEIGHT 1 (IN METRIC TON)							0.379

BAR BENDING SCHEDULE OF RAISED FOOTPATH

BAR ID	SHAPE OF BAR IN mm (NOT TO SCALE)	SPACING (MM)	Ø OF BARS (mm)	NO. OF BARS	LENGTH (m)	WEIGHT/LENGTH (KG/m)	TOTAL WEIGHT (KG)
FP1	2320 400	150	12	119	5.640	0.888	595.867
FP2	17610	150	10	21	17.610	0.617	228.002
ONE SIDE							823.869
TOTAL WEIGHT IN METRIC TON							0.824

Government of Nepal Ministry of Physical Infrastructure and Transport **Department of Roads** **Project Directorate Office (ADB)** **SASEC Highway Improvement Project-** Project Preparatory Consultant (SHIP-PPC) ADB Loan No: 3722-NEP	**CONSULTANT:** Soosung Engineering Co. Ltd, Korea in association with ERMC P (Ltd) and Tech Studio of Engineeering Nepal	**IMPLEMENTING AGENCY:** **DOR, DCID** **ROAD NAME:** **East West Highway (H01)** **Butwal - Gorusinghe Section**	**SHEET TITLE:** Detail of barbending of **Pahila Bridge** (46/H001/304_A)	**SCALE:** As Shown		**NAME**	**SIGNATURE**	**REV NO.**	**DESCRIPTION**	**DATE:** November , 2022 **DWG.NO.:** 304_Pahila **SHEET NO.:** 10/26
					Designed by:	Saroj Bhattarai				
					Checked by:	P. Upadhyaya				
					Approved by:	Dr. T.H.Choi				

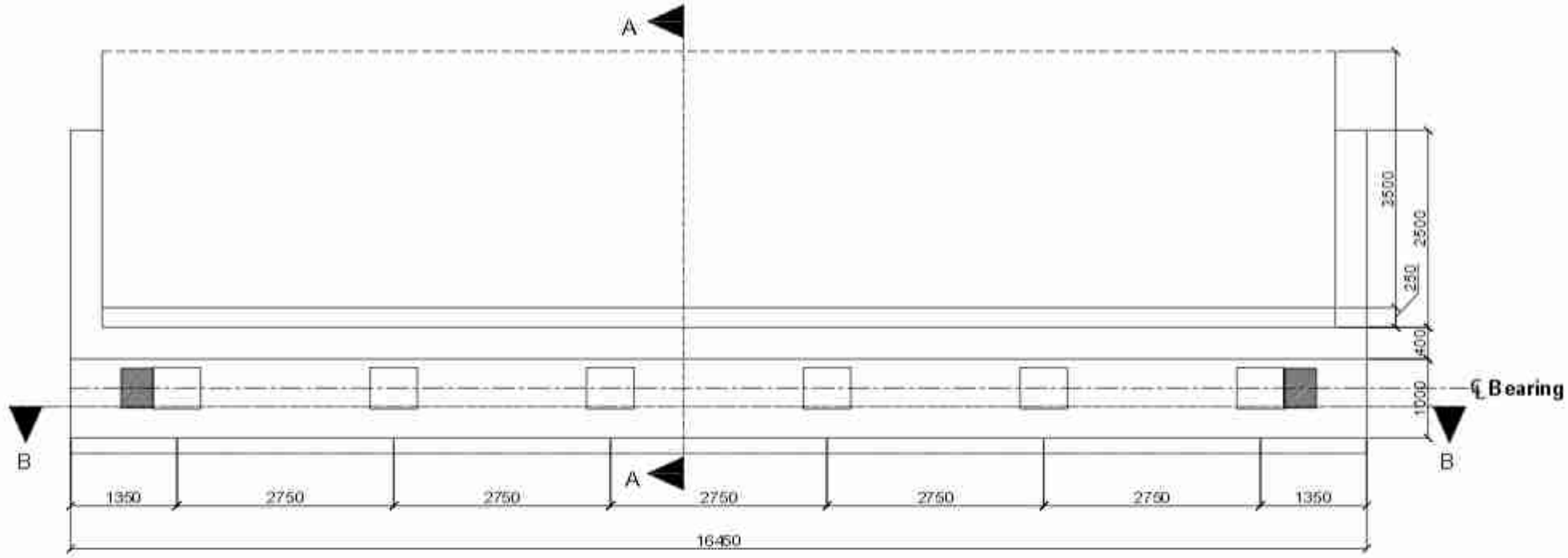

Plan Of Abutment
Scale:-1:75

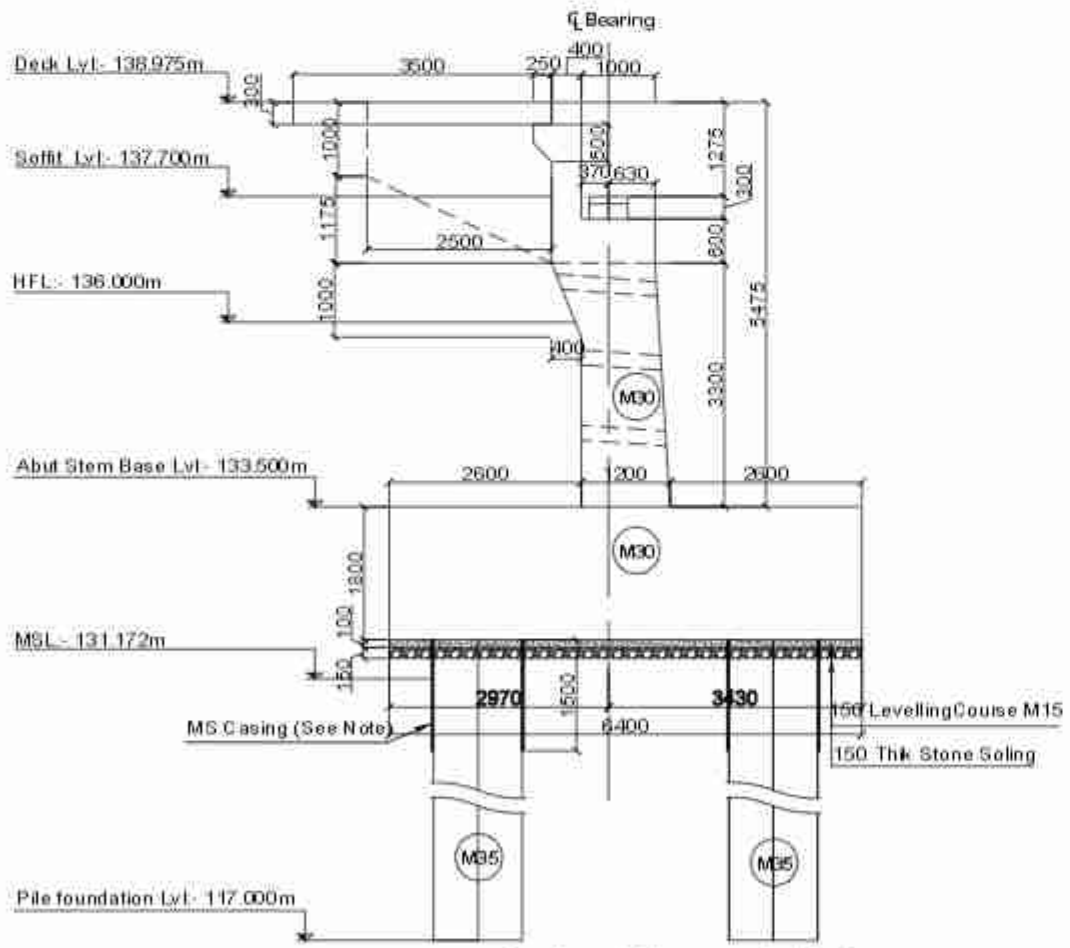

Section of Abutment At (A-A)
Scale:-1:100

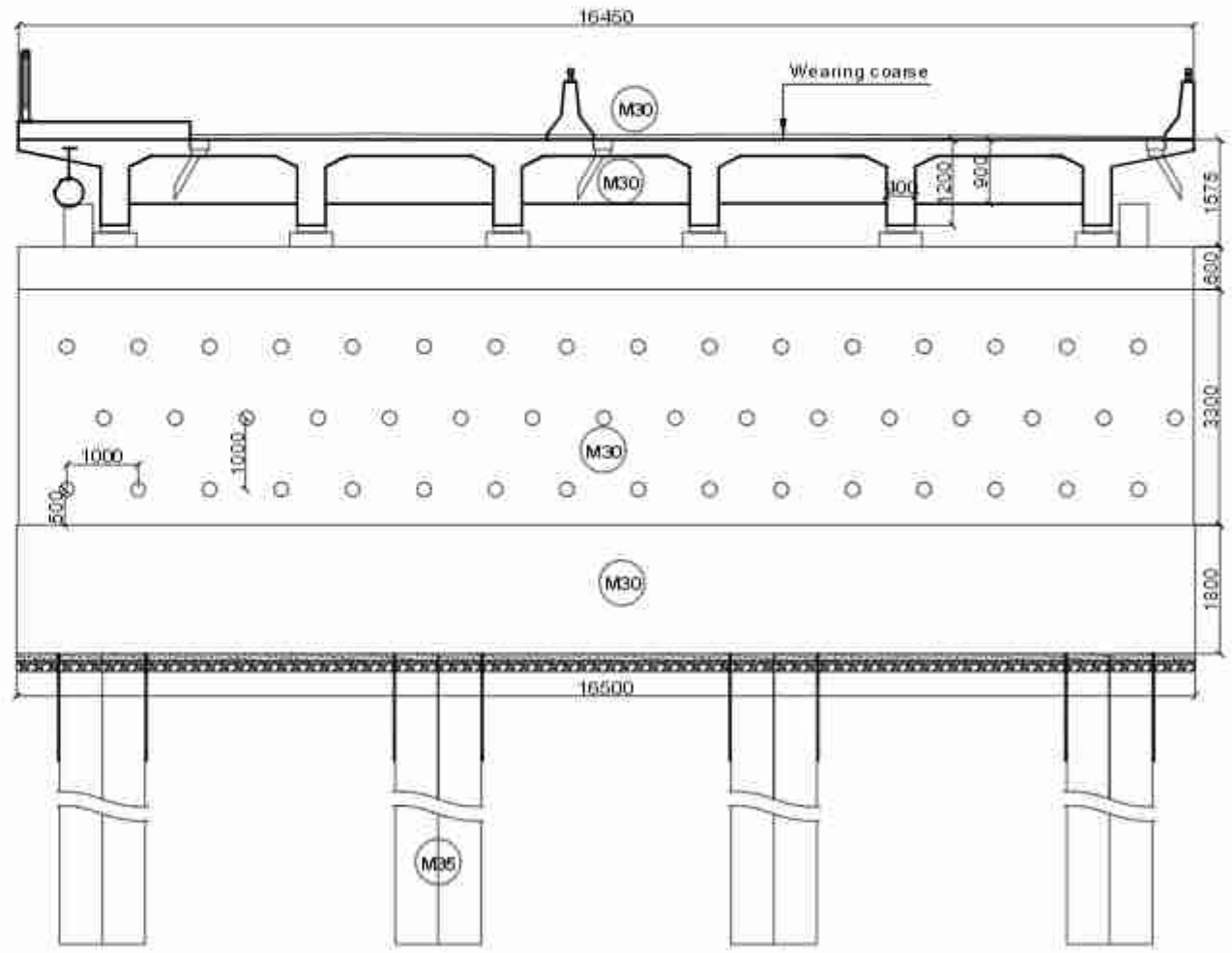

Section of Abutment At (B-B)
Scale:-1:100

Government of Nepal Ministry of Physical Infrastructure and Transport **Department of Roads** **Project Directorate Office (ADB)** **SASEC Highway Improvement Project-** Project Preparatory Consultant (SHIP-PPC) ADB Loan No: 3722-NEP	**CONSULTANT:** Soosung Engineering Co. Ltd, Korea in association with ERMC P (Ltd) and Tech Studio of Engineeering Nepal	**IMPLEMENTING AGENCY:** **DOR, DCID** **ROAD NAME:** **East West Highway (H01)** **Butwal - Gorusinghe Section**	**SHEET TITLE:** Abutment Details of Pahila Bridge (46/H001/304_A)	**SCALE:** As Shown		**NAME**	**SIGNATURE**	**REV NO.**	**DESCRIPTION**	**DATE:** November , 2022 **DWG.NO.:** 304_Pahila **SHEET NO.:** 11/28
					Designed by:	Saroj Bhattarai				
					Checked by:	P. Upadhyaya				
					Approved by:	Dr. T.H. Choi				

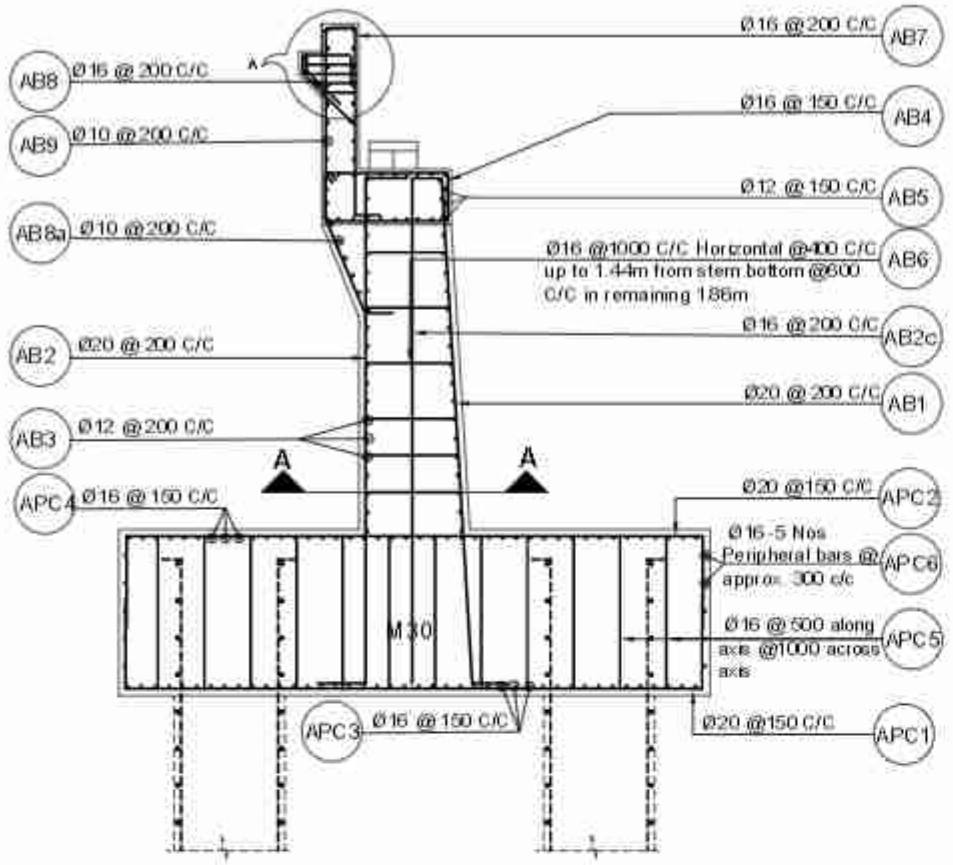

Reinforcement Details of Abutment
Scale:-1:75

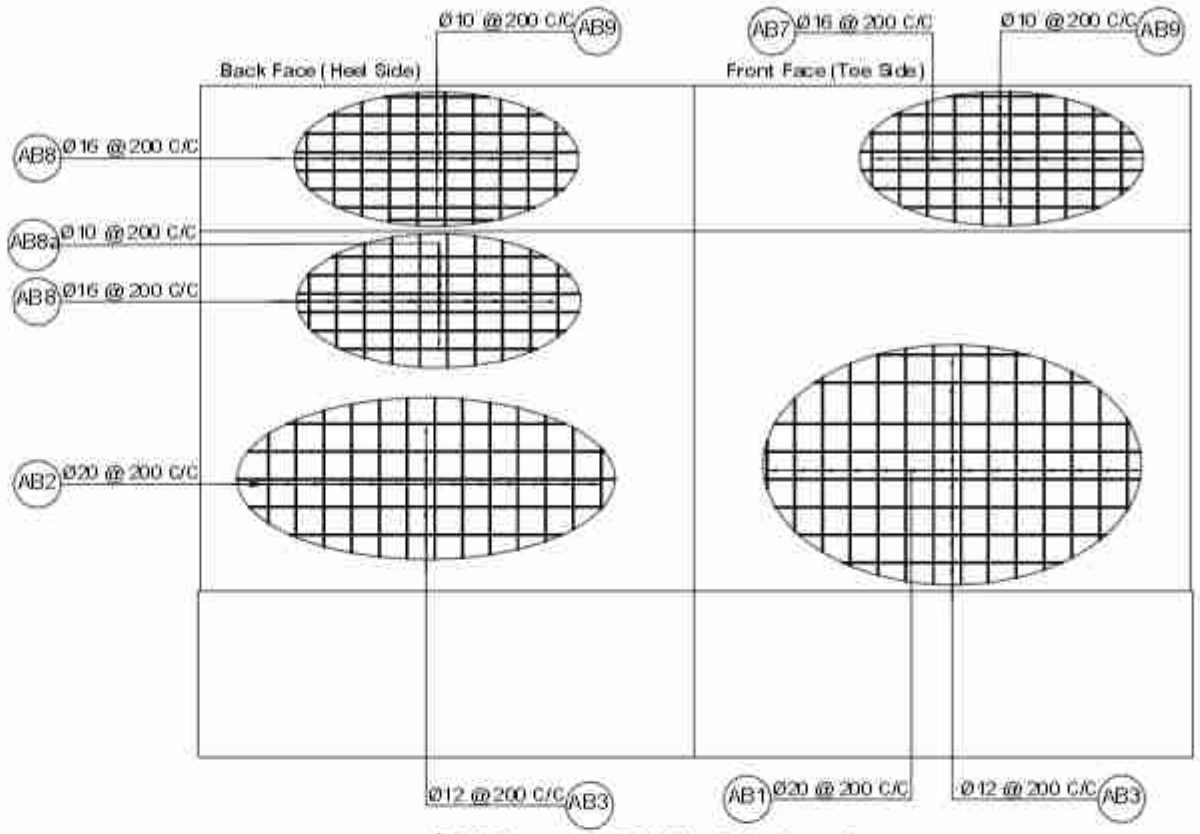

Reinforcement Details of Abutment
Scale:-1:75

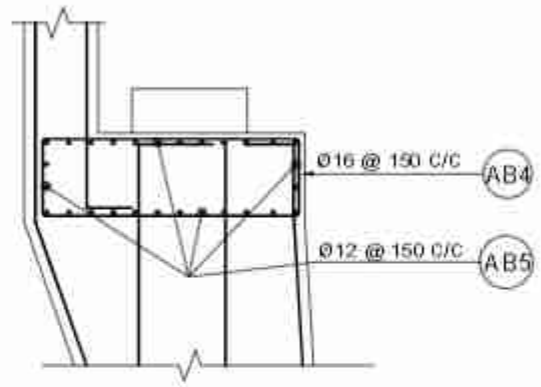

Reinforcement Details Of Abutment Cap
Scale:-1:50

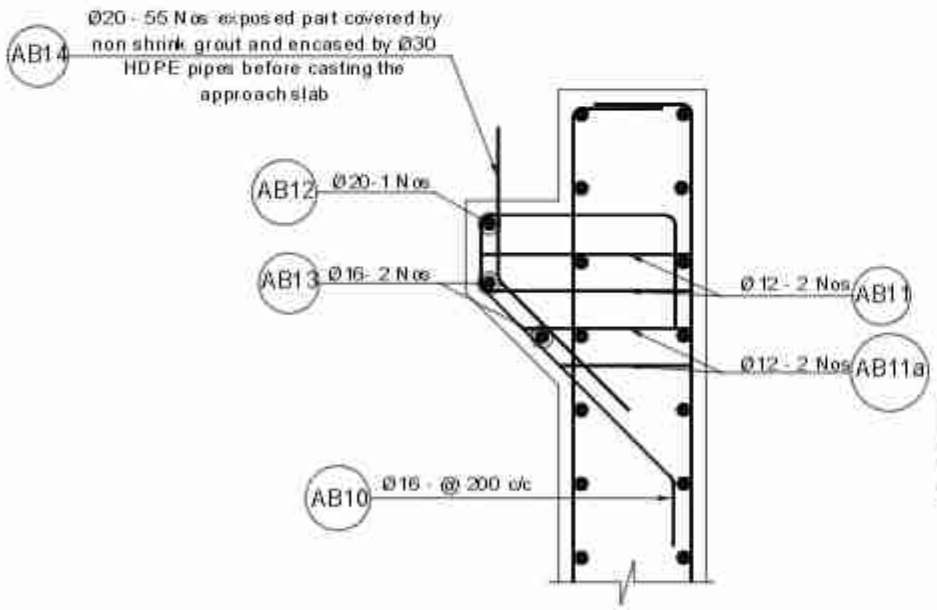

Detail at A
Scale:-1:20

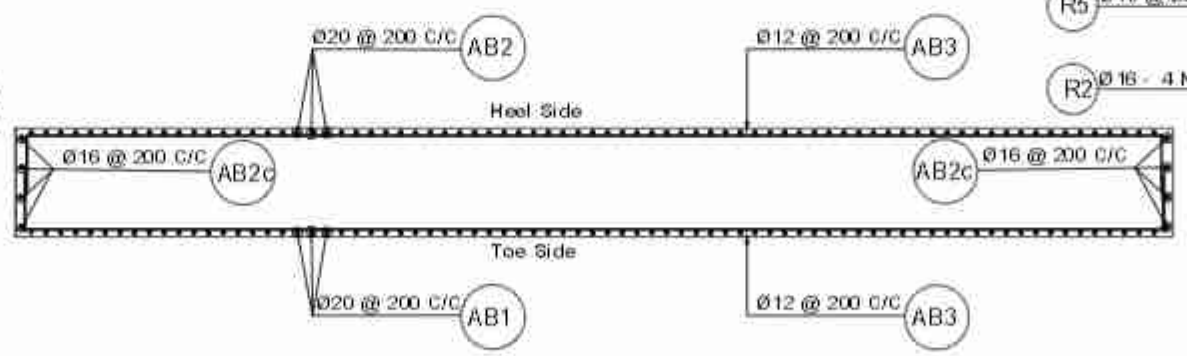

Section at A-A
Scale:-1:75

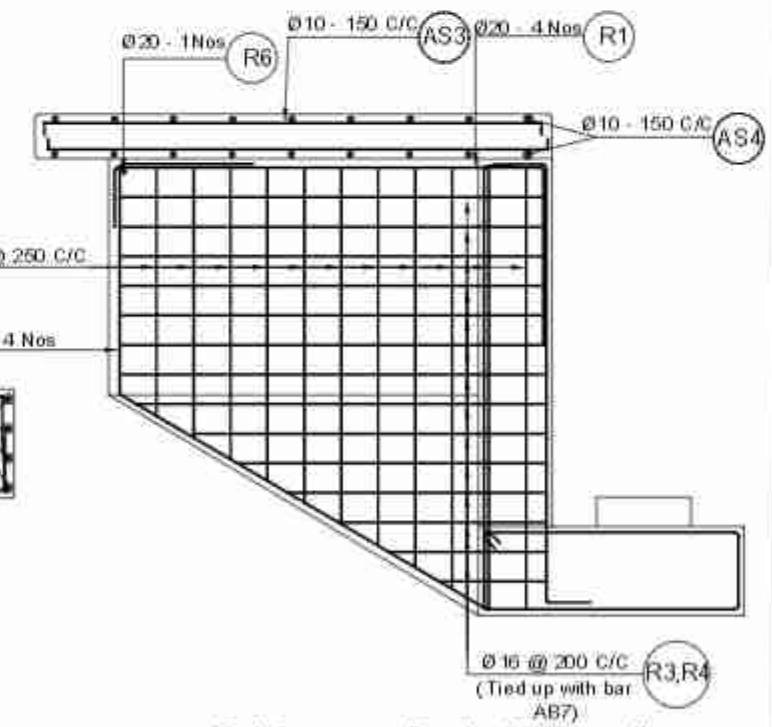

Reinforcement Details Of Wingwall
Scale:-1:50

Government of Nepal Ministry of Physical Infrastructure and Transport **Department of Roads** **Project Directorate Office (ADB)** **SASEC Highway Improvement Project-** Project Preparatory Consultant (SHIP-PPC) ADB Loan No: 3722-NEP	**CONSULTANT:** Soosung Engineering Co. Ltd, Korea in association with ERMC P (Ltd) and Tech Studio of Engineeering Nepal	**IMPLEMENTING AGENCY:** **DOR, DCID** **ROAD NAME:** **East West Highway (H01)** **Butwal - Gorusinghe Section**	**SHEET TITLE:** Reinforcement Details of Abutment of Pahila Bridge (46/H001/304_A)	**SCALE:** As Shown		**NAME**	**SIGNATURE**	**REV NO.**	**DESCRIPTION**	**DATE:** November , 2022 **DWG.NO.:** 304_Pahila **SHEET NO.:** 12/26
					Designed by:	Saroj Bhattarai				
					Checked by:	P. Upadhyaya				
					Approved by:	Dr. T.H.Choi				

BAR BENDING SCHEDULE OF ABUTMENT

BAR ID	SHAPE OF BAR IN mm (NOT TO SCALE)	SPACING (MM)	Ø OF BARS (mm)	NO. OF BARS	LENGTH (m)	WEIGHT/LENGTH (kG/m)	TOTAL WEIGHT (kG)
AB1	300; 5490; 93°; 500	200 mm c/c	20	83	6.290	2.466	1287.506
AB2	500; 5490; 500	200 mm c/c	20	83	6.490	2.466	1328.444
AB2c	5490; 500	At side face 200 mm c/c	16	12	5.990	1.578	113.461
AB3	avg.800; 16290	200 mm c/c	12	36	34.180	0.888	1092.440
AB4	avg.1235; 515; 2*100	150 mm c/c	16	111	3.700	1.578	648.224
AB5	16300	150 mm c/c	12	24	16.300	0.888	347.314
AB6	1035-835; Hook Length 160; 1000 mm C/C horizontal; 400 mm C/C Vertical upto 1.4m from pier bottom; 1000 mm C/C vertical alternating 100 m		16	137	1.383	1.578	299.050
AB7	250; 2175; 300	200 mm c/c	16	83	2.725	1.578	356.981
AB8	2100; 250; 2300; 300	200 mm c/c	16	83	3.727	1.578	488.245
AB8a	16300	200 mm c/c	10	7	16.300	0.617	70.347
AB9	16290; 398	200 mm c/c	10	9	30.116	0.617	183.756
AB10	500; 200; 547	300 mm c/c	16	79	1.747	1.578	217.831
AB11	500; 200; 200		12	168	0.900	0.888	126.247
AB11a	250 Average; 200; 200		12	168	0.650	0.888	91.179
AB12	16300		20	1	16.300	2.466	40.198
AB13	16300		16	2	16.300	1.578	51.454
AB14	400; 500		20	55	0.900	2.466	122.075
TOTAL WEIGHT ABUTMENT KG							6864.743
TOTAL WEIGHT (IN METRIC TON)							6.865

BAR BENDING SCHEDULE FOR ABUTMENT PILECAP

BAR ID	SHAPE OF BAR IN mm (NOT TO SCALE)	Ø OF BARS (mm)	NO. OF BARS	LENGTH (m)	WEIGHT/LENGTH (kG/m)	TOTAL WEIGHT (kG)
APC1	6230; 1080	20	110	8.390	2.466	2276.015
APC2	6230; 1080	20	110	8.390	2.466	2276.015
APC3	16334; 1080	16	43	18.494	1.578	1255.162
APC4	16334; 1080	16	43	18.494	1.578	1255.162
APC5	1570; Curve length = 251; Curve radius = 40; Hook length = 80	16	272	2.232	1.578	958.216
		500 c/c along axis; 1000 c/c across axis; Approx.				
APC6	6250; 16350	16	5	45.200	1.578	356.705
TOTAL IN PILE OF ONE ABUTMENT						8377.276
TOTAL WEIGHT (IN METRIC TON)						8.377

BAR BENDING SCHEDULE FOR WINGWALL

BAR ID	SHAPE OF BAR IN mm (NOT TO SCALE)	Ø OF BARS (mm)	NO. OF BARS	LENGTH (m)	WEIGHT/LENGTH (kG/m)	TOTAL WEIGHT (kG)
R1	400; 2807; 1200	20	8	4.407	2.466	86.947
R2	300; 937; 2750	16	8	3.972	1.578	50.153
R3	2714; 214; 2*150	16	10	6.156	1.578	97.163
R4	avg.1350; 214; 2*150	16	12	3.428	1.578	64.927
R5	182; avg.1568	10	22	3.840	0.617	52.085
R6	307	20	2	0.307	2.466	1.514
R7	2000	10	4	2.800	0.617	6.905
R8	390; 350	10	16	1.320	0.617	12.207
TOTAL IN 2 WINGWALL IN ONE ABUTMENT						371.901
TOTAL WEIGHT (IN METRIC TON)						0.372

Government of Nepal Ministry of Physical Infrastructure and Transport **Department of Roads** **Project Directorate Office (ADB)** **SASEC Highway Improvement Project-** Project Preparatory Consultant (SHIP-PPC) ADB Loan No: 3722-NEP	**CONSULTANT:** Soosung Engineering Co. Ltd, Korea in association with ERMC P (Ltd) and Tech Studio of Engineeering Nepal	**IMPLEMENTING AGENCY:** **DOR, DCID** **ROAD NAME:** **East West Highway (H01)** **Butwal - Gorusinghe Section**	**SHEET TITLE:** Barbendinf Schedule of Pahila Bridge (46/H001/304_A)	**SCALE:** As Shown		NAME	SIGNATURE	REV NO.	DESCRIPTION	DATE: November , 2022 DWG.NO.: 304_Pahila SHEET NO.: 13/26
					Designed by:	Saroj Bhattarai				
					Checked by:	P. Upadhyaya				
					Approved by:	Dr. T.H. Choi				

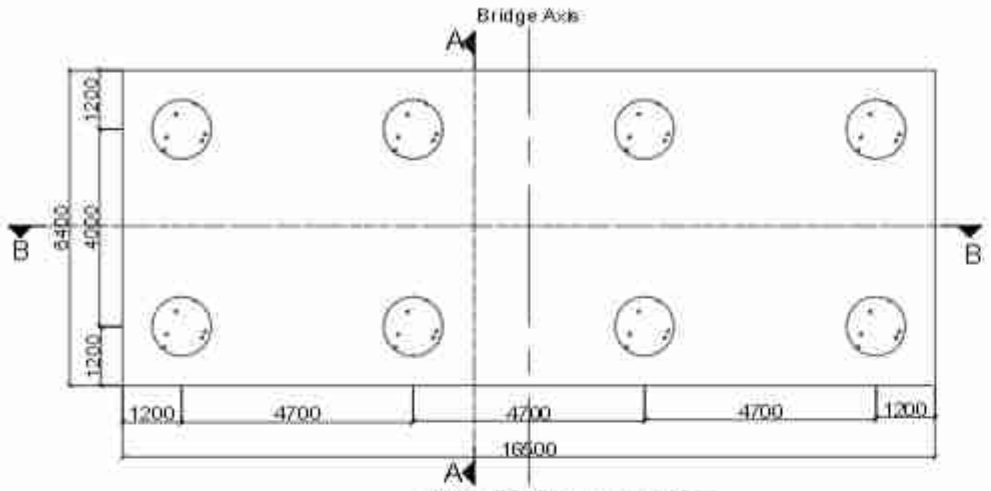

Plan Of Abutment Piles
Scale:-1:150

BAR BENDING SCHEDULE FOR ABUTMENT PILES						
BAR ID	SHAPE OF BAR IN mm (NOT TO SCALE)	Ø OF BARS (mm)	NO. OF BARS	LENGTH (m)	WEIGHT/LENGTH (kG/m)	TOTAL WEIGHT (kG)
AP1a	200 Full Length Bars 16305	20	26	16.510	2.466	1058.622
AP1b	200 Curtailed Bars 10500	0	0	0.000	0.000	0.000
AP2	Dia 12@Pitch 150 in original zone, 10m From bottom of pile cap	12	1	219.660	0.888	195.018
AP3	Dia 12@Pitch 200 in side pile cap/200 below original zone	12	1	106.270	0.888	94.348
TOTAL IN ONE PILE						1347.988
TOTAL (IN METRIC TON)						1.348
TOTAL IN 8 PILES OF ONE ABUTMENT (IN METRIC TON)						10.784

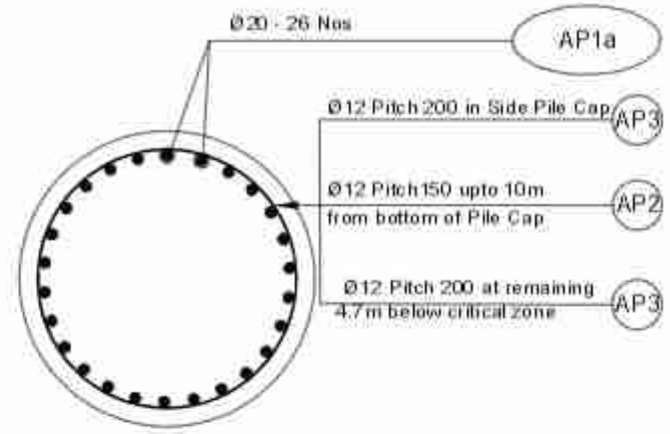

Section at A-A
Scale:-1:30

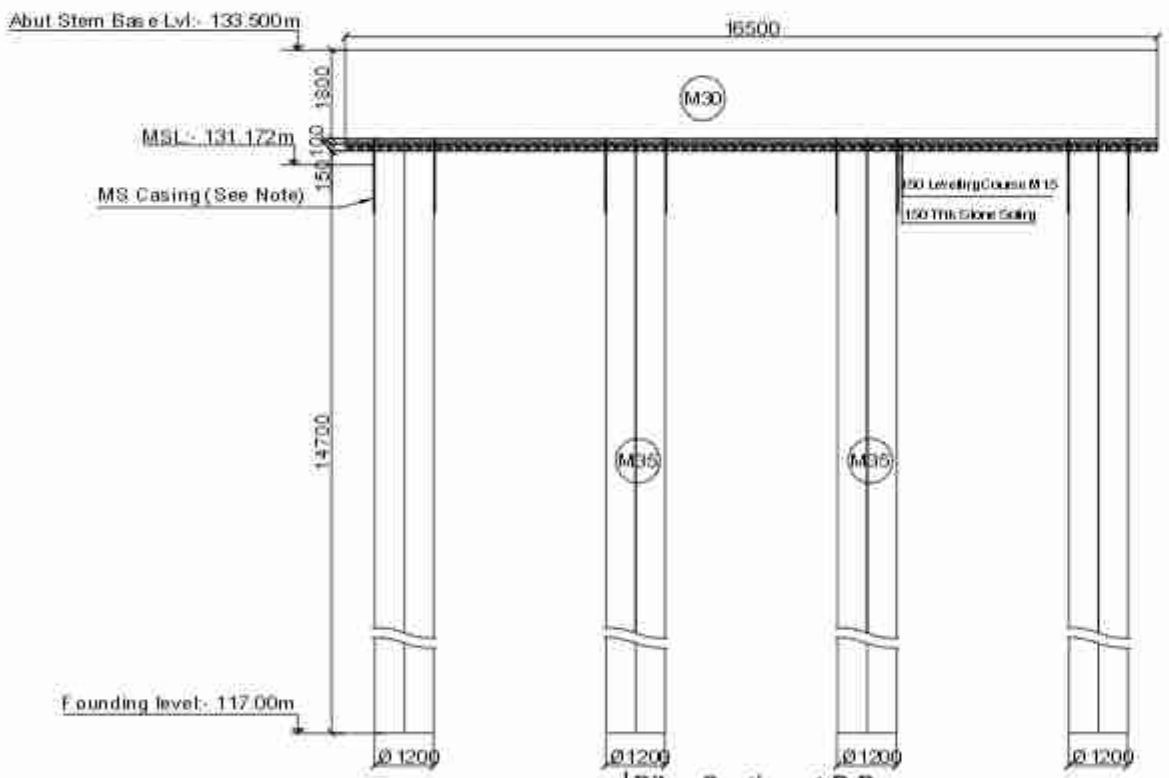

Piles Section at B-B
Scale:-1:150

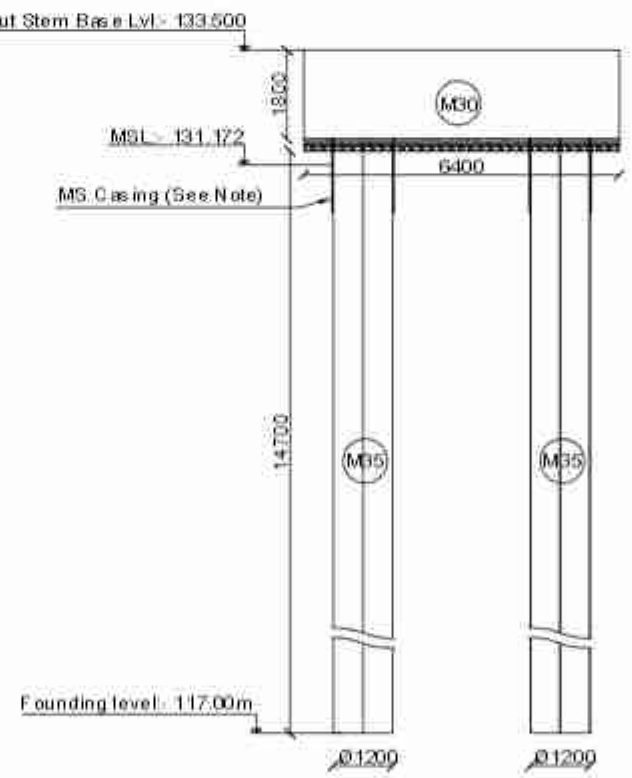

Piles Section at A-A
Scale:-1:150

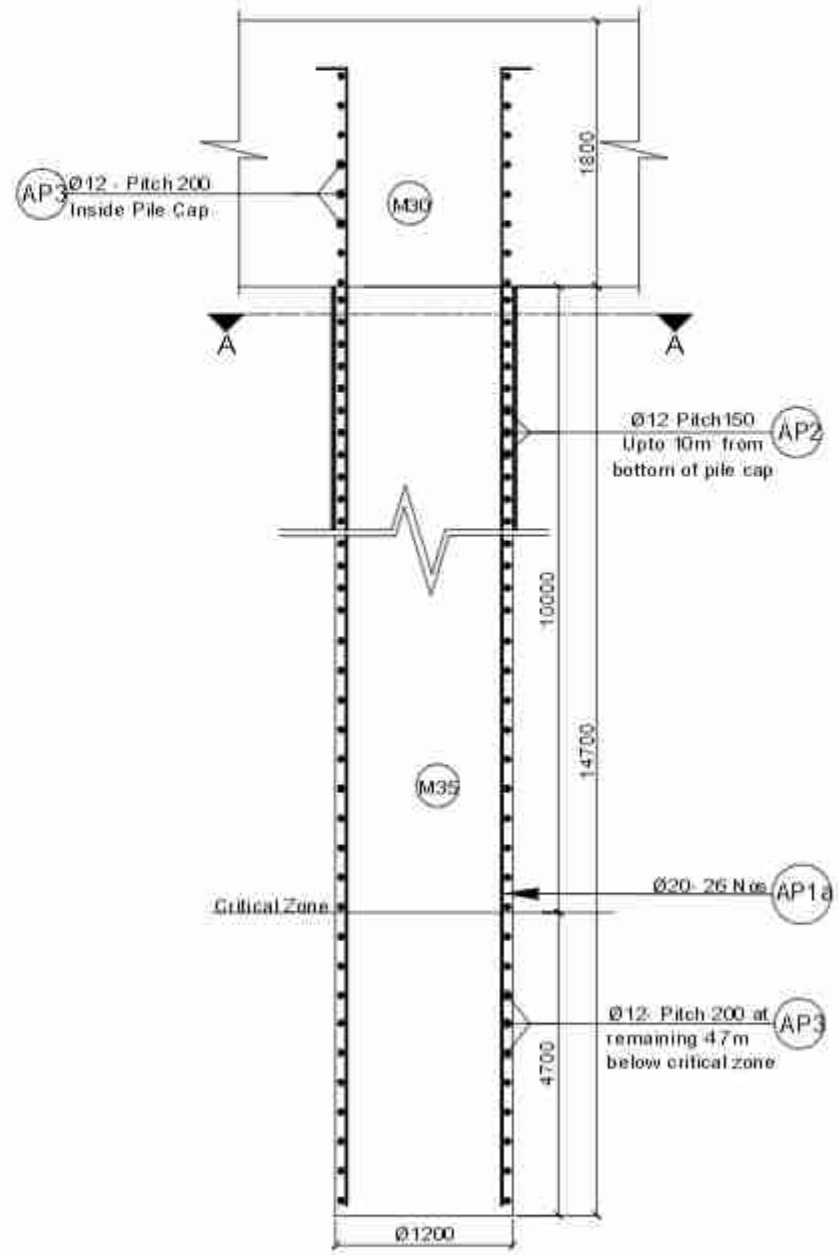

Reinforcement Details Of Pile
Scale:-1:50

Location	Design Pile Length m	Design Working load on pile (non - seismic casse)kn	Allowable Bearing Capacity on pile (Scour case)kn	Allowable Bearing Capacity of the Pile (Non Scour case)kn
Abutment	14.7	1576	2835	3019
Pier	17	994	1673	1706

Note On MS permanent casing on piles: In case piling works are done without temporary casing, the piles shall be lined with 6mm thick MS steel permanent casing up to 1.5 m or 0.5m below MSL whichever is larger (Subject to instruction and approval by the Engineer)

For Construction Methology and Sequence Please See General Notes.

Government of Nepal Ministry of Physical Infrastructure and Transport **Department of Roads** **Project Directorate Office (ADB)** **SASEC Highway Improvement Project-** Project Preparatory Consultant (SHIP-PPC) ADB Loan No: 3722-NEP	**CONSULTANT:** Soosung Engineering Co. Ltd, Korea in association with ERMC P (Ltd) and Tech Studio of Engineeering Nepal	**IMPLEMENTING AGENCY:** **DOR, DCID** **ROAD NAME:** **East West Highway (H01)** **Butwal - Gorusinghe Section**	**SHEET TITLE:** Reinforcement Details of Abutment Piles of Pahila Bridge (46/H001/304_A)	**SCALE:** As Shown		**NAME**	**SIGNATURE**	**REV NO.**	**DESCRIPTION**	**DATE:** November , 2022
					Designed by:	Saroj Bhattarai				DWG.NO.: 304_Pahila
					Checked by:	P. Upadhyaya				
					Approved by:	Dr. T.H Choi				SHEET NO.: 14/26

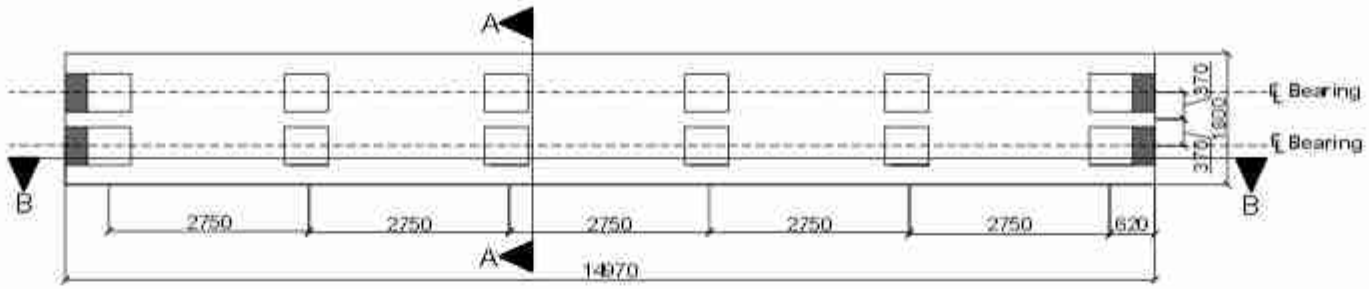

Plan of Pier
Scale:- 1:100

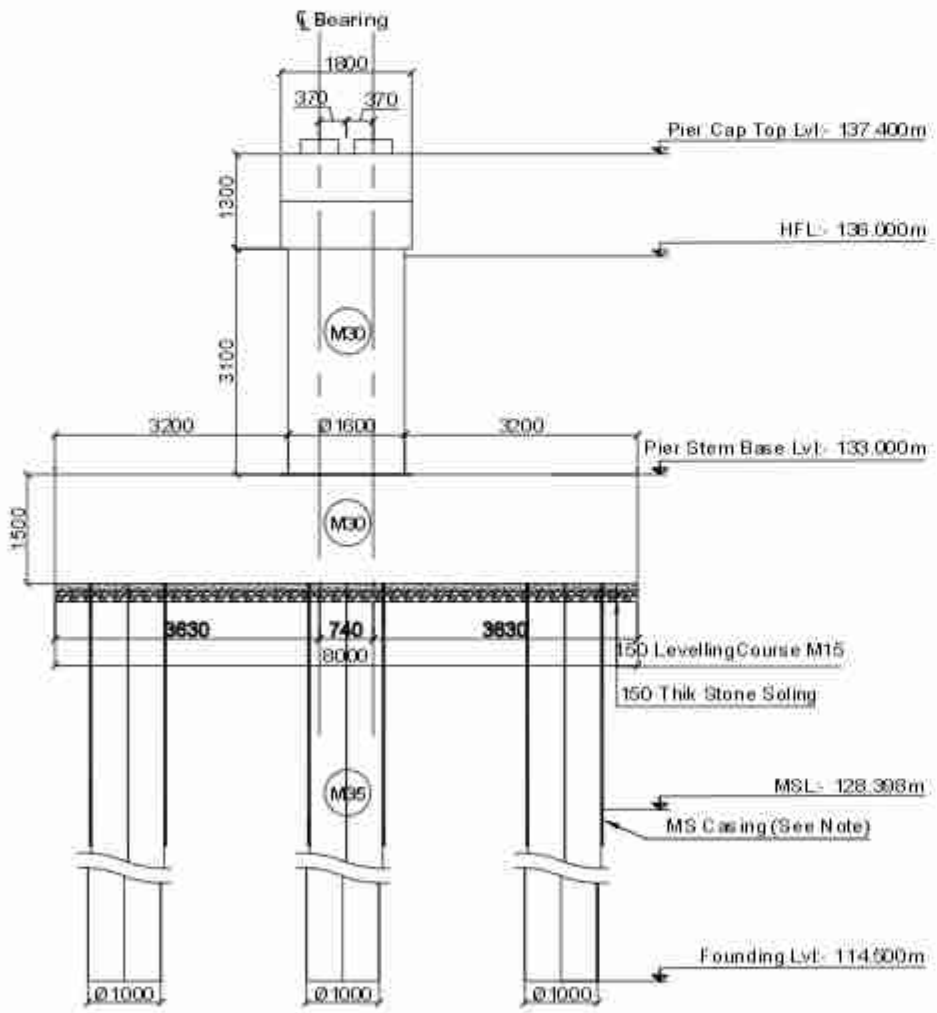

Section of Pier At (A-A)
Scale:-1:100

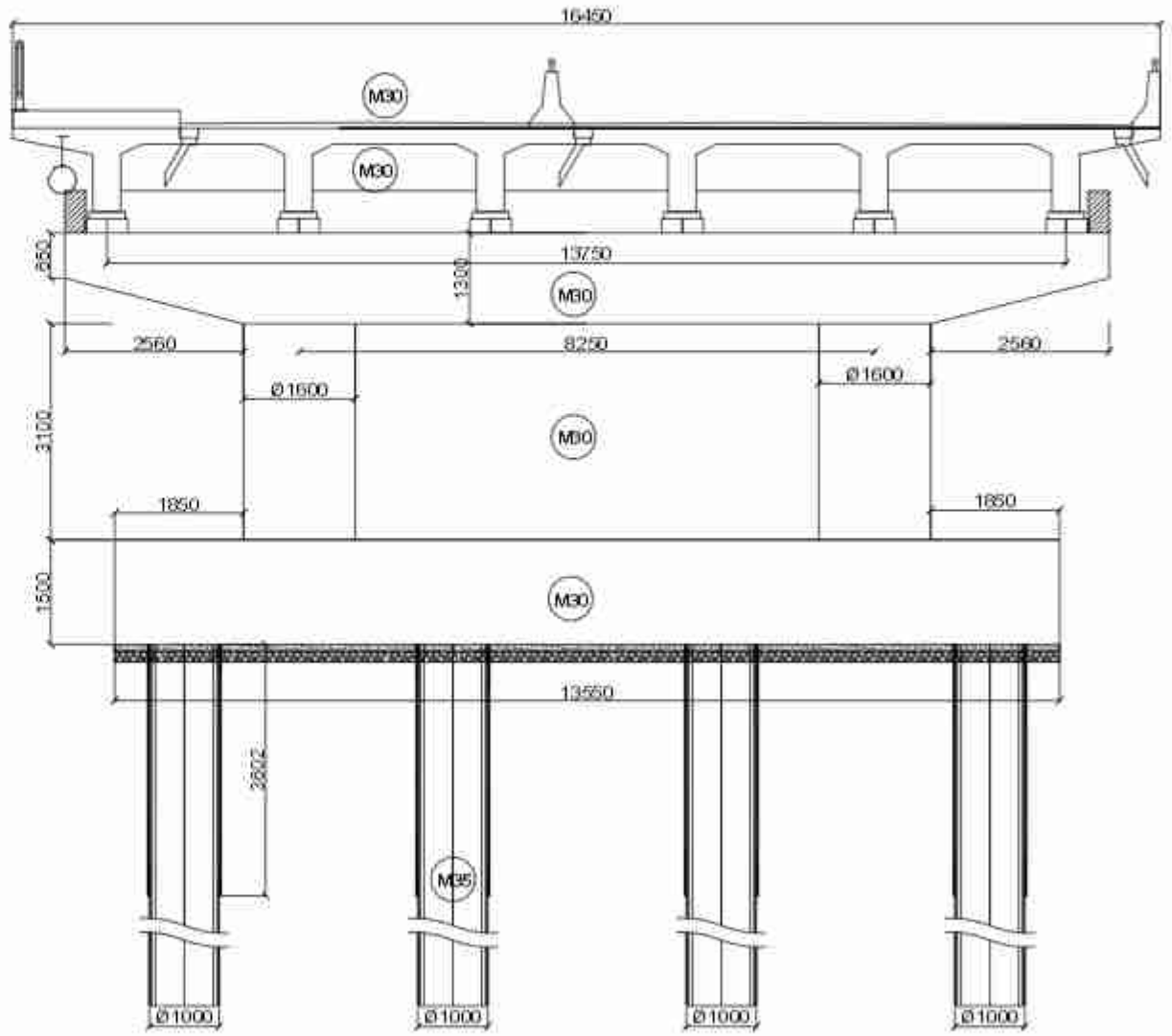

Section of Pier At (B-B)
Scale:-1:100

Government of Nepal Ministry of Physical Infrastructure and Transport **Department of Roads** **Project Directorate Office (ADB)** **SASEC Highway Improvement Project-** Project Preparatory Consultant (SHIP-PPC) ADB Loan No: 3722-NEP	**CONSULTANT:** Soosung Engineering Co. Ltd, Korea in association with ERMC P (Ltd) and Tech Studio of Engineeering Nepal	**IMPLEMENTING AGENCY:** **DOR, DCID** **ROAD NAME:** **East West Highway (H01)** **Butwal - Gorusinghe Section**	**SHEET TITLE:** Detail of Pier of Pahila Bridge (46/H001/304_A)	**SCALE:** As Shown		**NAME**	**SIGNATURE**	**REV NO.**	**DESCRIPTION**	**DATE:** November, 2022
					Designed by:	Saroj Bhattarai				**DWG.NO.:** 304_Pahila
					Checked by:	P. Upadhyaya				
					Approved by:	Dr. T.H.Choi				**SHEET NO.:** 15/26

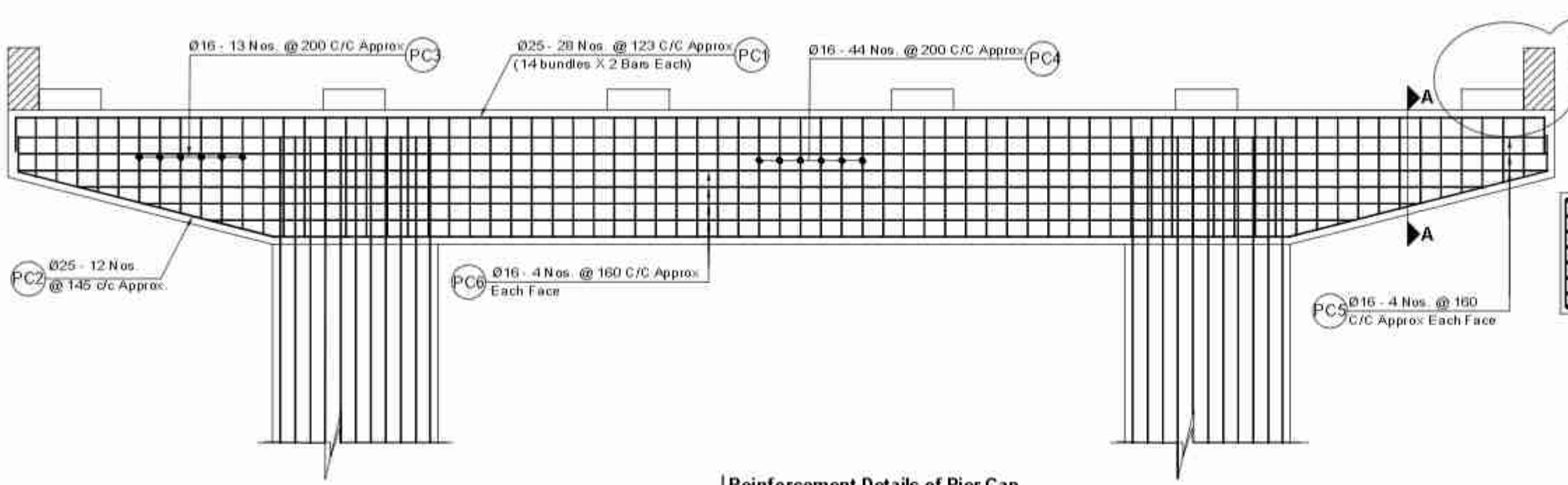

Reinforcement Details of Pier Cap
Scale:-1:50

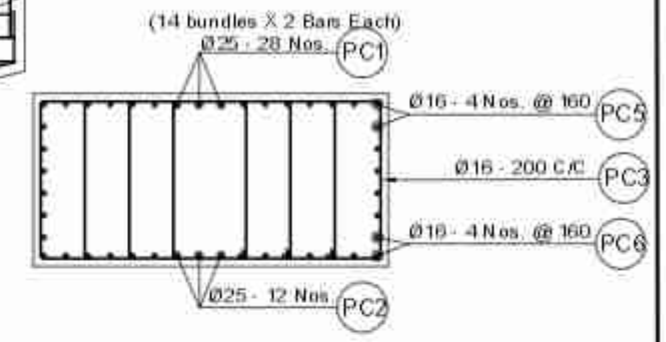

Section at A-A
Scale:-1:50

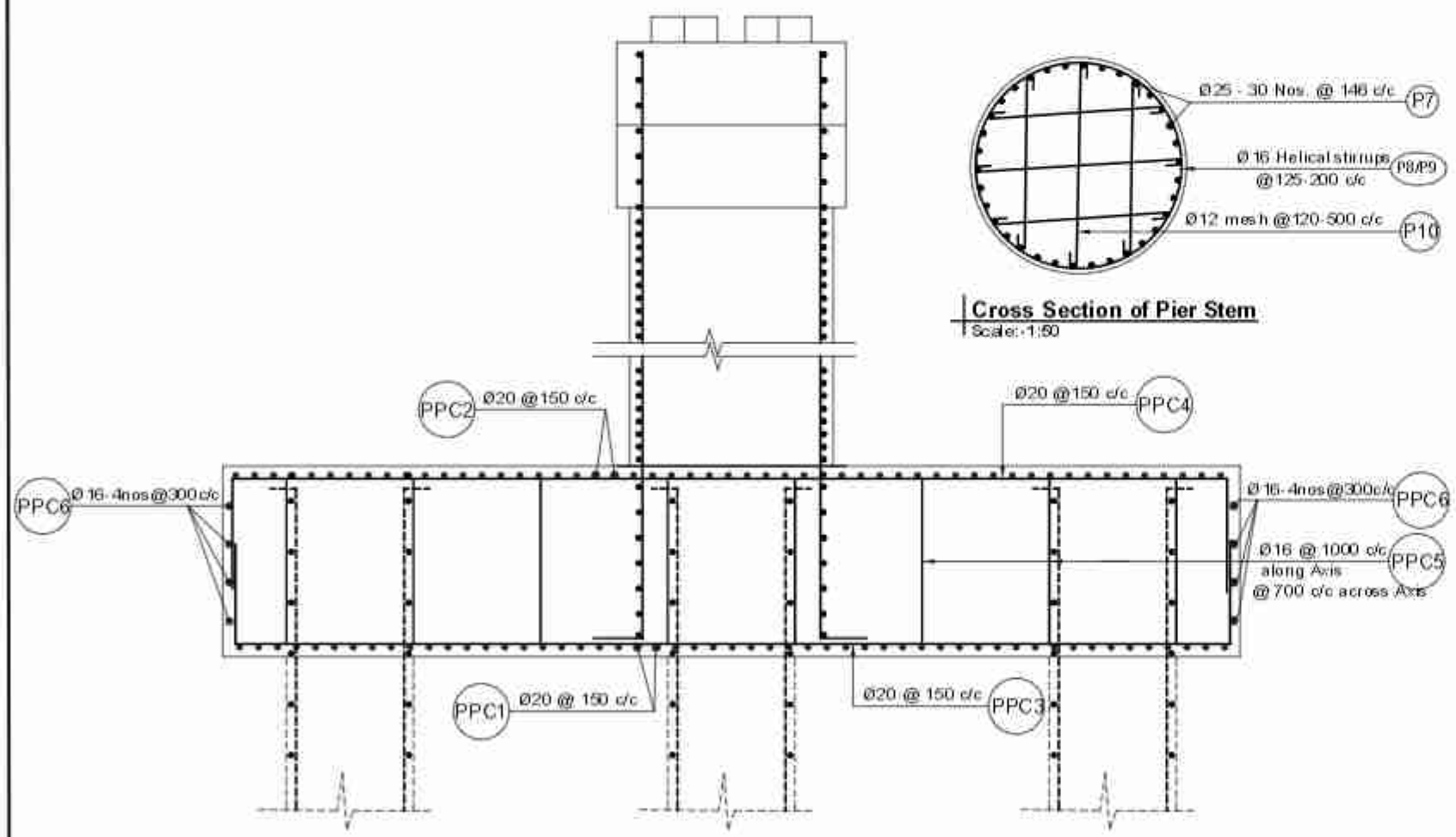

Cross Section of Pier Stem
Scale:-1:50

Reinforcement Details of Pier Pile Cap
Scale:-1:50

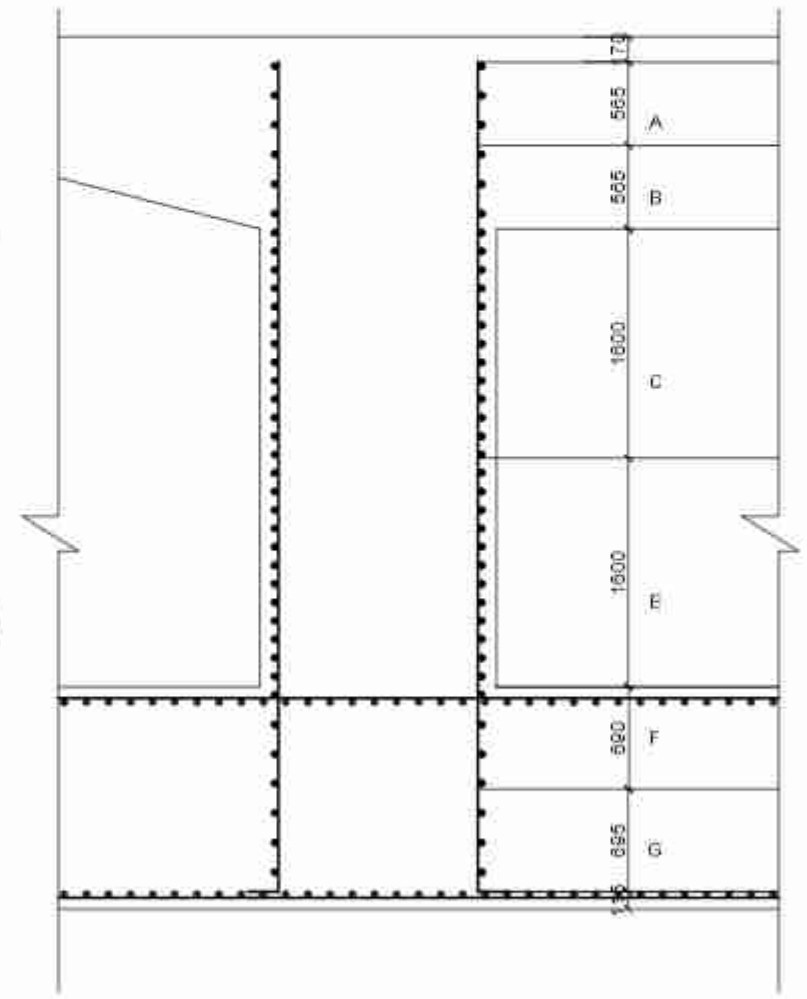

ZONE	BAR	PITCH	DIA
A	P9	200	16
B	P9	200	16
C	P8	125	16
	P10	125	12
D	P9	200	16
	P10	500	12
E	P8	125	16
	P10	125	12
F	P9	200	16
G	P9	200	16

Pitch of Spiral / Transverse Reinforcement of Pier
Scale:-1:50

Government of Nepal Ministry of Physical Infrastructure and Transport **Department of Roads** **Project Directorate Office (ADB)** **SASEC Highway Improvement Project-** Project Preparatory Consultant (SHIP-PPC) ADB Loan No: 3722-NEP	**CONSULTANT:** Soosung Engineering Co. Ltd, Korea in association with ERMC P (Ltd) and Tech Studio of Engineeering Nepal	**IMPLEMENTING AGENCY:** **DOR, DCID** **ROAD NAME:** **East West Highway (H01)** **Butwal - Gorusinghe Section**	**SHEET TITLE:** Reinforcement Details of Pier (46/H001/304_A)	**SCALE:** As Shown		**NAME**	**SIGNATURE**	**REV NO.**	**DESCRIPTION**	**DATE:** November , 2022 **DWG.NO.:** 304_Pahila **SHEET NO.:** 16/26
					Designed by:	Saroj Bhattarai				
					Checked by:	P. Upadhyaya				
					Approved by:	Dr. T.H. Choi				

BAR BENDING SCHEDULE FOR PIER PILE CAP

BAR ID	SHAPE OF BAR IN mm (NOT TO SCALE)	Ø OF BARS (mm)	NO. OF BARS	LENGTH (m)	WEIGHT/LENGTH (kG/m)	TOTAL WEIGHT (kG)
PPC1	13380 900	20	54	15.180	2.466	2021.557
PPC2	13380 900	20	54	15.180	2.466	2021.557
PPC3	7830 900	20	91	9.630	2.466	2.161.166
PPC4	7830 900	20	91	9.630	2.466	2.161.166
PPC5	1270 Curve length = 251 Curve radius = 40 Hook length = 80	16	189	1.932	1.578	576.328
		1000 c/c along axis 700 c/c across axis Approx.				
PPC6	7850 13400 Peripheral Reinforcement	16	4	42.500	1.578	268.318
TOTAL IN PILE OF ONE PIER PILE CAP						9210.093
TOTAL WEIGHT (IN METRIC TON)						9.210

BAR BENDING SCHEDULE FOR PIER CAP

BAR ID	SHAPE OF BAR IN mm (NOT TO SCALE)	SPACING (MM)	Ø OF BARS (mm)	NO. OF BARS	LENGTH (m)	WEIGHT/LENGTH (kG/m)	TOTAL WEIGHT (kG)
PC1	13545 560	123 Approx in 2layers	25	14	14.665	3.853	791.135
			25	14	14.665	3.853	791.135
PC2	2565 9700 560	145	25	12	15.950	3.853	737.535
PC3	3*650 Hooks 100 6 legs H varies 485 -1135	200	16	26	9.360	1.578	384.105
PC4	3*650 1135 Hooks 100	200	16	44	11.310	1.578	785.445
PC5	13585 Hooks 100 1635	160	16	4	30.640	1.578	193.441
PC6	L varies 13585-9700 Hooks 100 1635	160	16	4	26.760	1.578	168.945
TOTAL IN ONE PIER PIER CAP							3851.742
TOTAL WEIGHT (IN METRIC TON)							3.852

BAR BENDING SCHEDULE FOR PIER STEM

BAR ID	SHAPE OF BAR IN mm (NOT TO SCALE)	Ø OF BARS (mm)	NO. OF BARS	LENGTH (m)	WEIGHT/LENGTH (kG/m)	TOTAL WEIGHT (kG)
PC7	400 5665 400 146 c/c Approx	25	30	6.465	3.853	747.361
PC8		16	1	116.370	1.578	183.671
PC9		16	1	57.800	1.578	91.228
PC10		12	27	8.320	0.888	199.439
TOTAL IN PILE OF ONE PIER STEM						1221.699
TOTAL (IN METRIC TON)						1.222

Government of Nepal Ministry of Physical Infrastructure and Transport **Department of Roads** **Project Directorate Office (ADB)** **SASEC Highway Improvement Project-** Project Preparatory Consultant (SHIP-PPC) ADB Loan No: 3722-NEP	**CONSULTANT:** Soosung Engineering Co. Ltd, Korea in association with ERMC P (Ltd) and Tech Studio of Engineeering Nepal	**IMPLEMENTING AGENCY:** **DOR, DCID** **ROAD NAME:** **East West Highway (H01)** **Butwal - Gorusinghe Section**	**SHEET TITLE:** Barbending of Pier of Pahila Bridge (46/H001/304_A)	**SCALE:** As Shown		**NAME**	**SIGNATURE**	**REV NO.**	**DESCRIPTION**	**DATE** November , 2022 **DWG.NO.:** 304_Pahila **SHEET NO.:** 17/26
					Designed by:	Saroj Bhattarai				
					Checked by:	P. Upadhyaya				
					Approved by:	Dr. T.H.Choi				

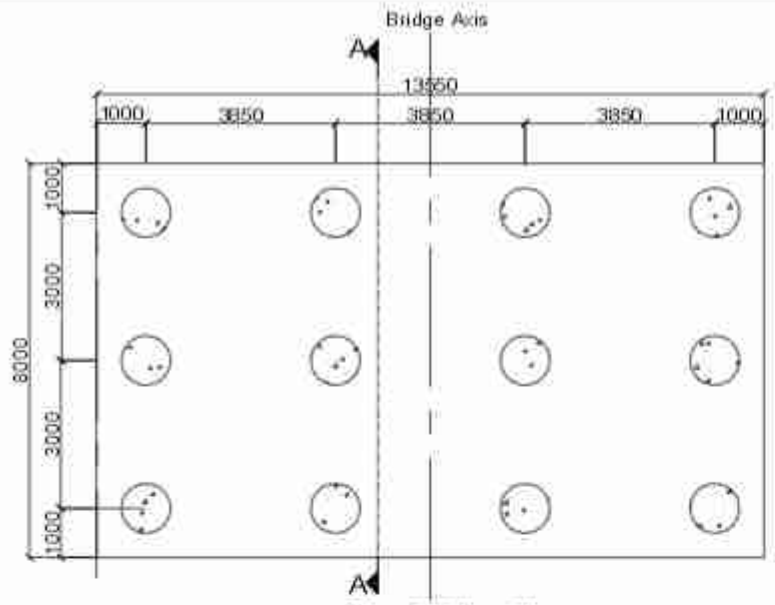

Plan Of Pier Piles
Scale:-1:150

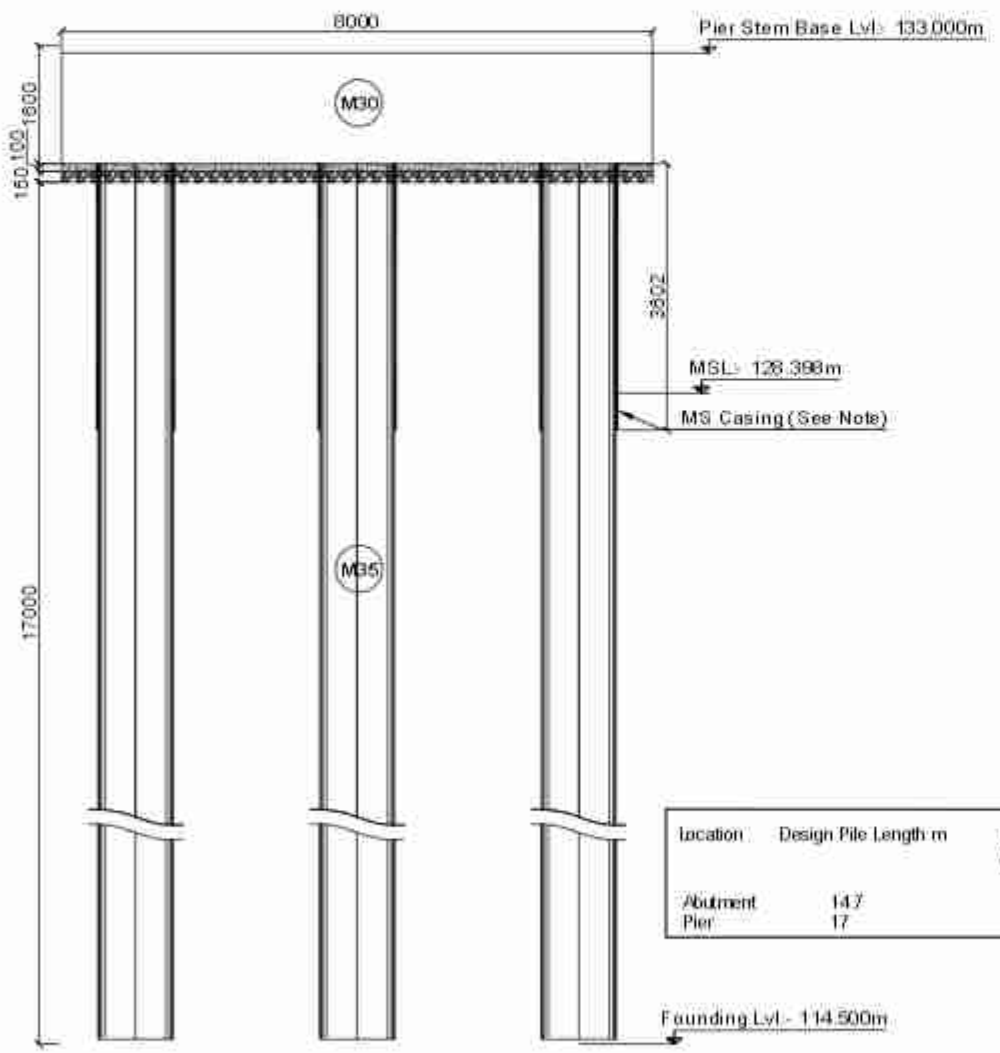

Section at A-A
Scale:-1:100

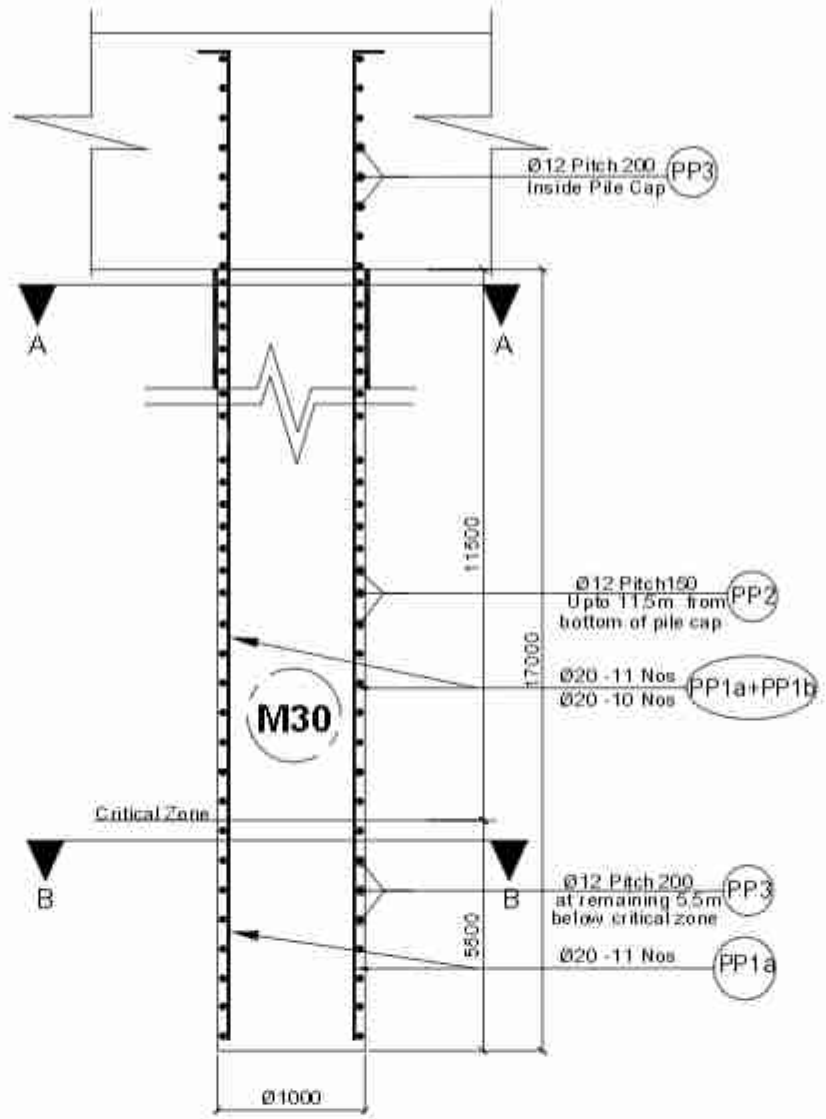

Reinforcement Details Of Pile
Scale:-1:50

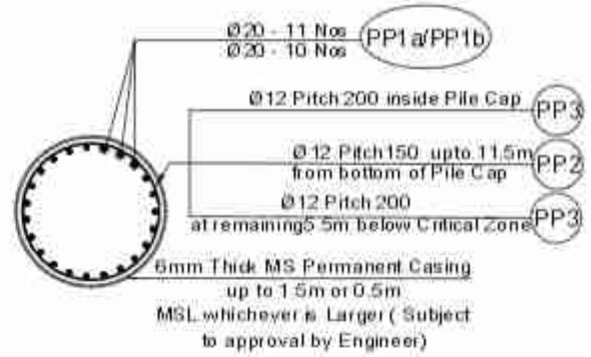

Section At A-A
Scale:-1:50

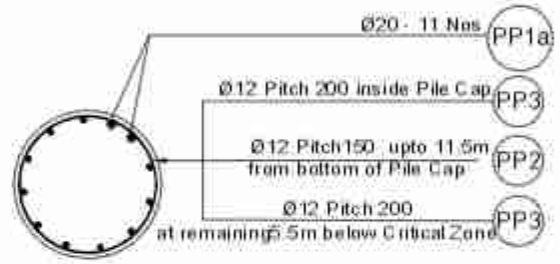

Section At B-B
Scale:-1:50

Location	Design Pile Length m	Design Working load on pile (non - seismic casse) kn	Allowable Bearing Capacity on pile (Scour case) kn	Allowable Bearing Capacity of the Pile (Non Scour case) kn
Abutment	14.7	1576	2835	3019
Pier	17	894	1673	1700

Note On MS permanent casing on piles: In case piling works are done without temporary casing, the piles shall be lined with 6mm thick MS steel permanent casing up to 1.5 m or 0.5m below MSL whichever is larger (Subject to instruction and approval by the Engineer)

BAR BENDING SCHEDULE FOR PIER PILES

BAR ID	SHAPE OF BAR IN mm (NOT TO SCALE)	Ø OF BARS (mm)	NO. OF BARS	LENGTH (m)	WEIGHT/LENGTH (kG/m)	TOTAL WEIGHT (kG)
PP1a	200 Full length bars 18300	20	11	18.500	2.466	501.863
PP1b	200 Curtailed bars 12900	20	10	13.100	2.466	323.066
PP2		12	1	205.000	0.888	182.002
PP3		12	1	93.380	0.888	82.904
TOTAL IN ONE PILE						1089.836
TOTAL (IN METRIC TON)						1.090
TOTAL FOR 12 PILES IN ONE PIER (IN METRIC TON)						13.078

For Construction Methology and Sequence Please See General Notes.

Government of Nepal Ministry of Physical Infrastructure and Transport **Department of Roads** **Project Directorate Office (ADB)** **SASEC Highway Improvement Project-** Project Preparatory Consultant (SHIP-PPC) ADB Loan No: 3722-NEP	**CONSULTANT:** Soosung Engineering Co. Ltd, Korea in association with ERMC P (Ltd) and Tech Studio of Engineeering Nepal	**IMPLEMENTING AGENCY:** **DOR, DCID** **ROAD NAME:** **East West Highway (H01)** **Butwal - Gorusinghe Section**	**SHEET TITLE:** Reinforcement of Pier of Pahila Bridge (46/H001/304_A)	**SCALE:** As Shown		**NAME**	**SIGNATURE**	**REV NO.**	**DESCRIPTION**	**DATE:** November , 2022 **DWG.NO.:** 304_Pahila **SHEET NO.:** 18/28
					Designed by:	Saroj Bhattarai				
					Checked by:	P. Upadhyaya				
					Approved by:	Dr. T.H. Choi				

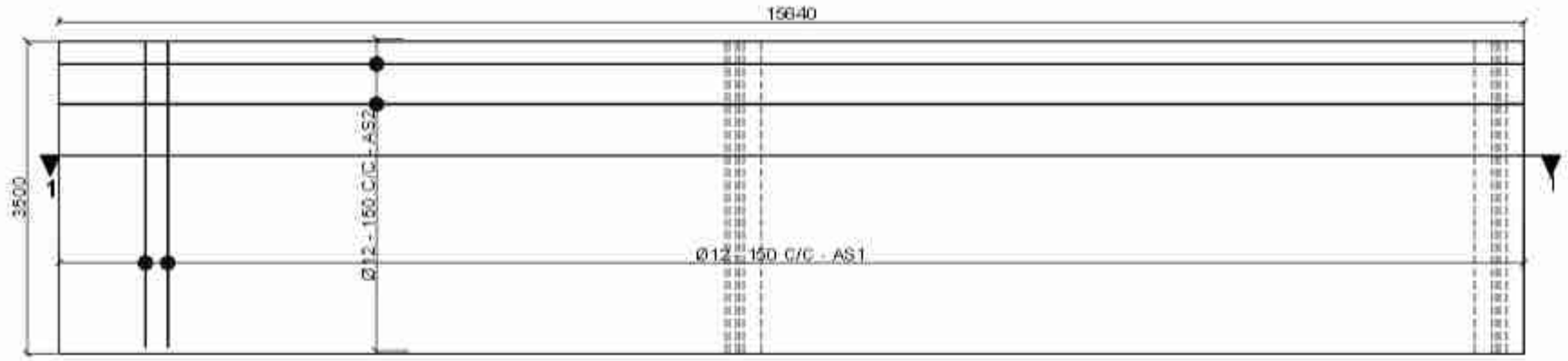

Plan of Reinforcement Details of Approach Slab
Scale:- 1:75

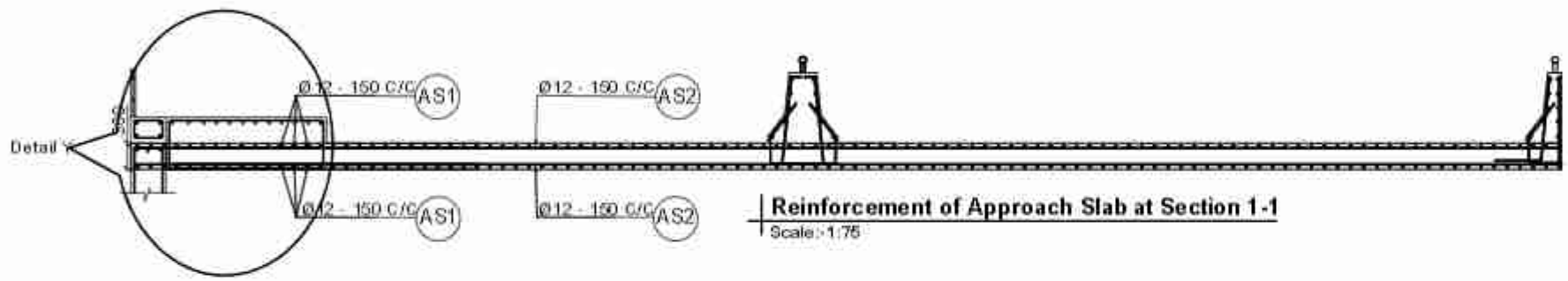

Reinforcement of Approach Slab at Section 1-1
Scale:- 1:75

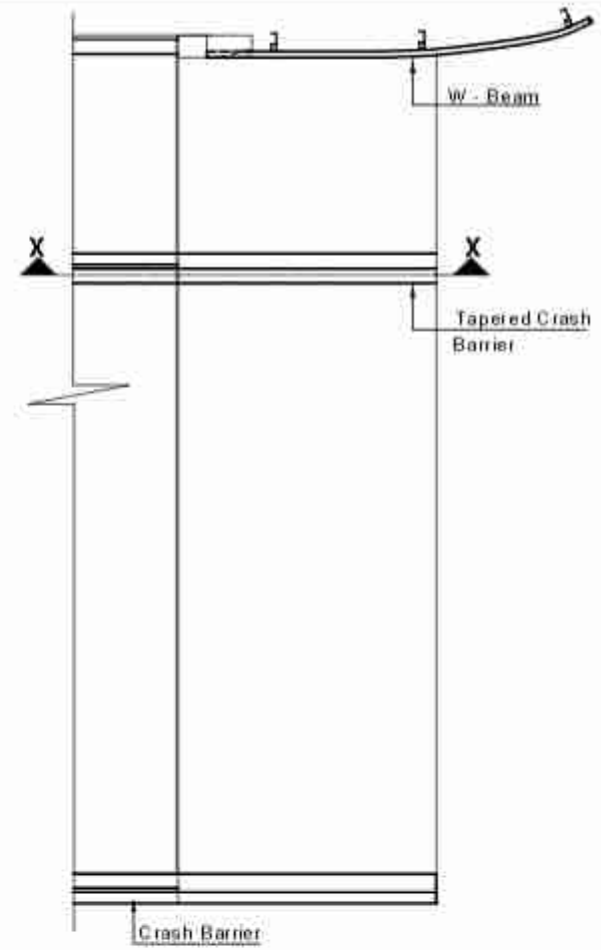

Plan of Approach Slab
Not to Scale

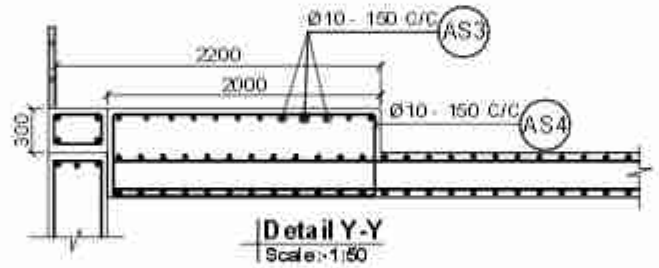

Detail Y-Y
Scale:- 1:50

BAR BENDING SCHEDULE OF APPROACH SLAB							
BAR ID	SHAPE OF BAR IN mm (NOT TO SCALE)	SPACING (mm)	Ø OF BARS (mm)	NO. OF BARS	LENGTH (m)	WEIGHT/LENGTH (kg/m)	TOTAL WEIGHT (kg)
AS1	3400	-	12	210	3.400	0.888	633.001
AS2	15550	-	12	48	15.550	0.888	662.666
AS3	3400		10	15	3.400	0.617	31.443
AS4	1920 / 520		10	18	5.000	0.617	55.489
TOTAL IN ONE APPROACH SLAB							1296.567
TOTAL WEIGHT IN METRIC TON							1.297

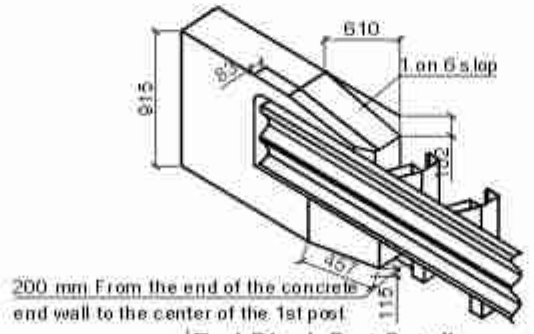

End Block Part Details
Scale:- 1:50

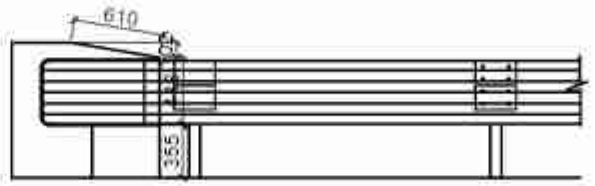

Eleavation
Scale:- 1:50

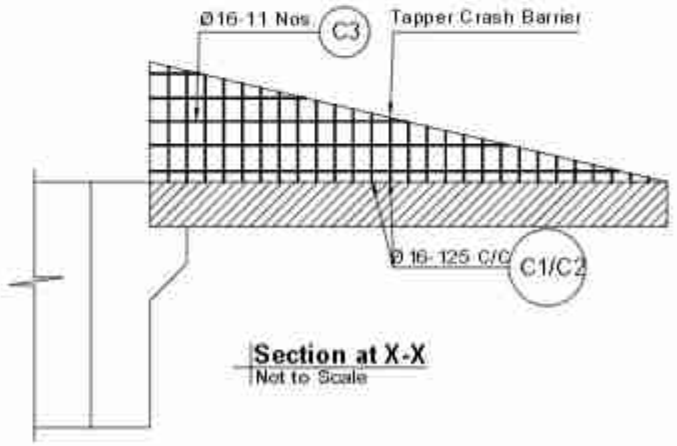

Section at X-X
Not to Scale

Government of Nepal Ministry of Physical Infrastructure and Transport **Department of Roads** **Project Directorate Office (ADB)** **SASEC Highway Improvement Project-** Project Preparatory Consultant (SHIP-PPC) ADB Loan No: 3722-NEP	**CONSULTANT:** Soosung Engineering Co. Ltd, Korea in association with ERMC P (Ltd) and Tech Studio of Engineeering Nepal	**IMPLEMENTING AGENCY:** **DOR, DCID** **ROAD NAME:** **East West Highway (H01)** **Butwal - Gorusinghe Section**	**SHEET TITLE:** Approach Slab of Pahila Bridge (46/H001/304_A)	**SCALE:** As Shown		NAME	SIGNATURE	REV NO.	DESCRIPTION	DATE November , 2022 DWG.NO.: 304_Pahila SHEET NO.: 19/26
					Designed by:	Saroj Bhattarai				
					Checked by:	P. Upadhyaya				
					Approved by:	Dr. T.H Choi				

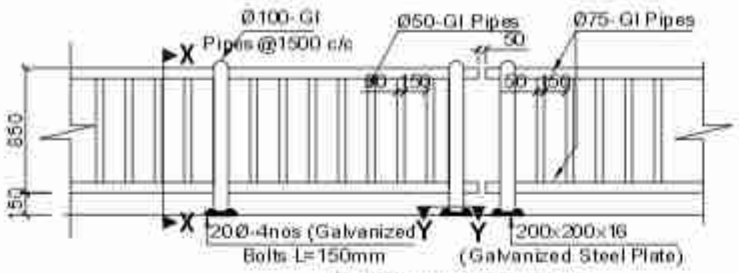

Railing Post Details
Scale:- 1:50

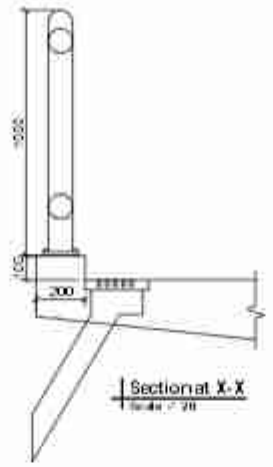

Section at X-X

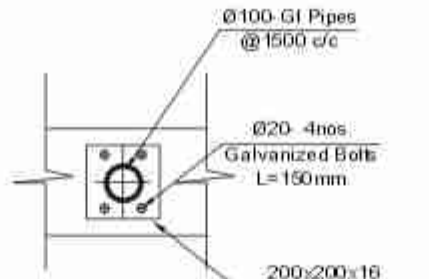

Section at Y-Y
Scale:-1:20

BAR BENDING SCHEDULE OF CENTRAL CRASH BARRIER							
BAR ID	SHAPE OF BAR IN mm (NOT TO SCALE)	SPACING (MM)	Ø OF BARS (mm)	NO. OF BARS	LENGTH (m)	WEIGHT/LENGTH (kG/m)	TOTAL WEIGHT (kG)
C1	575, 250, 555	125	16	8	2.210	1.578	27.905
C2	915, 730	125	16	16	1.645	1.578	41.542
C3	960		16	11	0.960	1.578	16.667
TOTAL FOR 1M							86.114
TOTAL FOR 1.0M IN MT							0.086

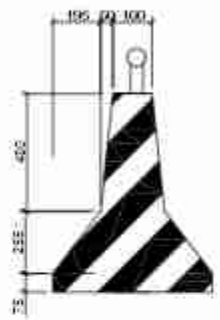

Painting Work on the Bridge Deck

Painting Work on Crash Barrier on The Surface Facing Towards Carriageway

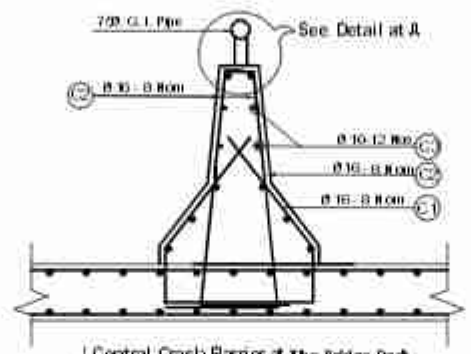

Central Crash Barrier at The Bridge Deck

Painting Work on Tapper Crash Barrier

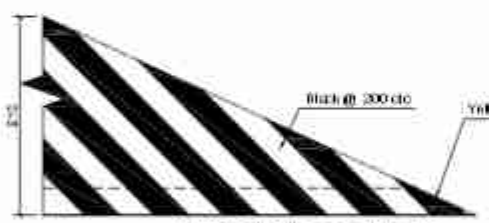

Painting Work on Crash Barrier on The Surface Facing Towards Carriageway

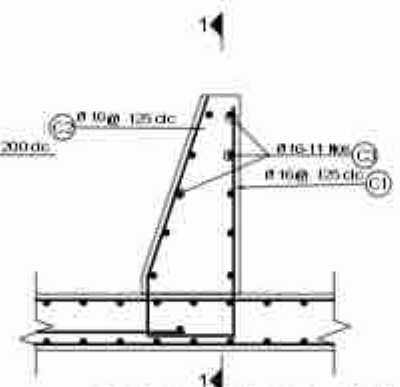

Crash Barrier Detail at The Tapered End

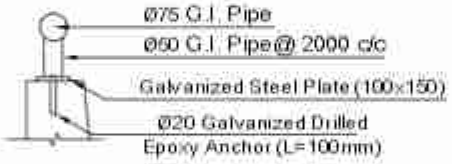

Details at- A-A
Scale:-1:20

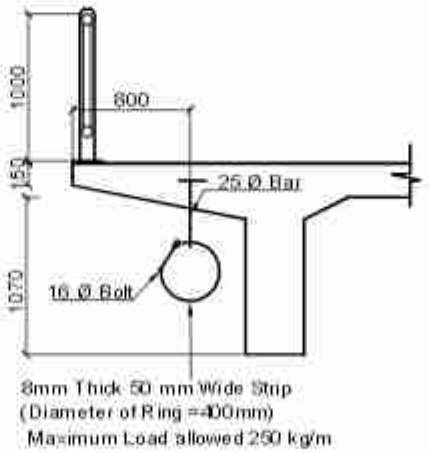

Utility hanger Detail
Scale:- 1:50

BAR BENDING SCHEDULE OF CRASH BARRIER							
BAR ID	SHAPE OF BAR IN mm (NOT TO SCALE)	SPACING (MM)	Ø OF BARS (mm)	NO. OF BARS	LENGTH (m)	WEIGHT/LENGTH (kG/m)	TOTAL WEIGHT (kG)
C1	575, 928, 225, 304	125	16	8	2.030	1.578	25.632
C2	915, 500	125	16	8	1.415	1.578	17.867
C3	960		16	11	0.960	1.578	16.667
TOTAL FOR 10M							60.166
TOTAL FOR 1.0M IN MT							0.006

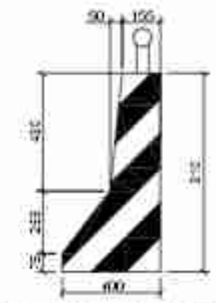

Painting Work on Crash Barrier

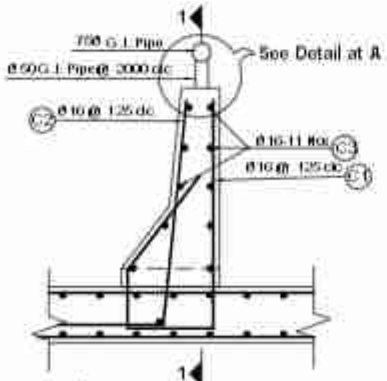

Crash Barrier Detail at The Bridge Deck

NOTES:
The crash barrier shall be sloped at both ends of the bridge as shown and the reinforcement shall be adjusted according to the slope.

Government of Nepal Ministry of Physical Infrastructure and Transport **Department of Roads** **Project Directorate Office (ADB)** **SASEC Highway Improvement Project-** Project Preparatory Consultant (SHIP-PPC) ADB Loan No: 3722-NEP	**CONSULTANT:** Soosung Engineering Co. Ltd, Korea in association with ERMC P (Ltd) and Tech Studio of Engineering Nepal	**IMPLEMENTING AGENCY:** **DOR, DCID** **ROAD NAME:** **East West Highway (H01)** **Butwal - Gorusinghe Section**	**SHEET TITLE:** Miscellaneous Details - 1 of Pahila Bridge (46/H001/304_A)	**SCALE:** As Shown		**NAME**	**SIGNATURE**	**REV NO.**	**DESCRIPTION**	**DATE:** November, 2022 **DWG.NO.:** 304_Pahila **SHEET NO.:** 20/26
					Designed by:	Saroj Bhattarai				
					Checked by:	P. Upadhyaya				
					Approved by:	Dr. T.H.Choi				

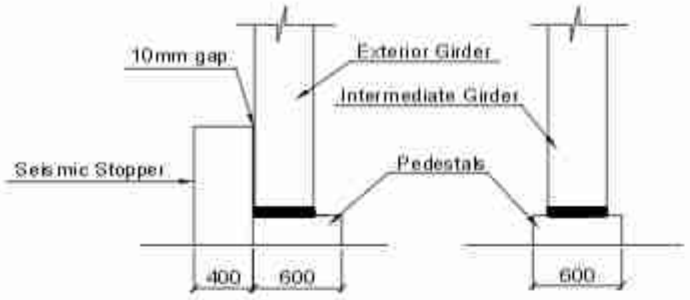

Abutment Cap With Stopper
Scale:-1:50

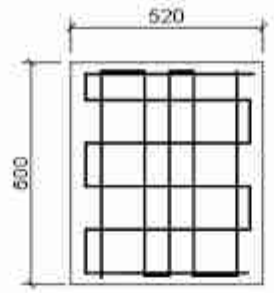

Pedestal Plan
Scale:-1:20

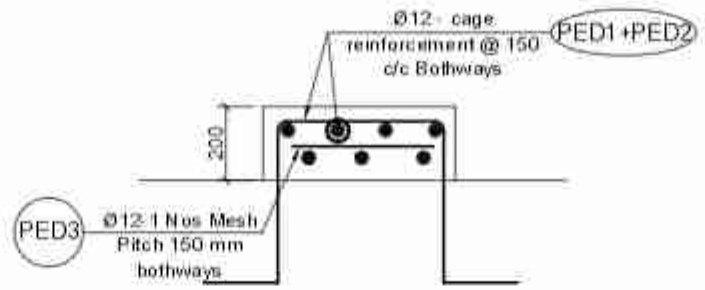

Pedestal Section
Scale:-1:20

NOTE
To match the height of ballast wall, the pedestal thickness shall be suitably modified.

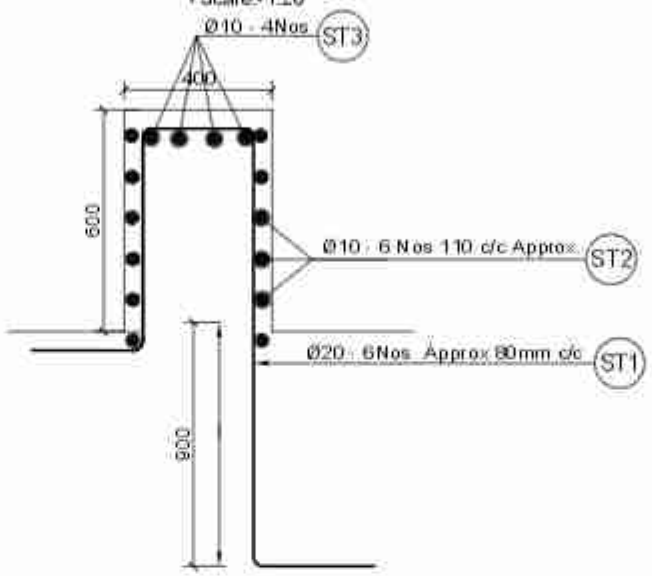

Stoppers Details
Scale:- 1:20

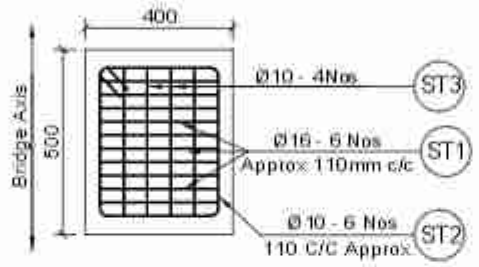

Stoppers Plan
Scale:-1:20

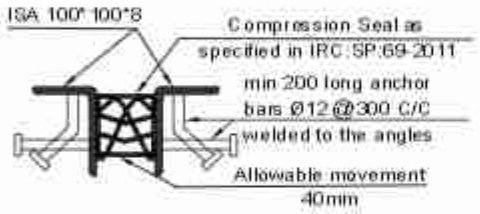

Compression seal type Expansion joints
Scale:-1:5

BAR BENDING SCHEDULE OF PEDESTAL

BAR ID	SHAPE OF BAR (mm) (NOT TO SCALE)	Ø OF BARS (mm)	NO. OF BARS	LENGTH (m)	WEIGHT/LENGTH (Kg/m)	TOTAL WEIGHT (Kg)
PED1	520; 300; 300	12	4	2.280	0.888	8.097
PED2	440; 200; 200	12	5	2.200	0.888	9.766
PED3	500; 428; Pitch 150 bothway, 1 layer	12	1	4.600	0.888	4.084
TOTAL BAR BENDING SCHEDULE OF PEDESTAL						21.947
TOTAL WEIGHT (IN METRIC TON)						0.022

BAR BENDING SCHEDULE OF STOPPER

BAR ID	SHAPE OF BAR (mm) (NOT TO SCALE)	Ø OF BARS (mm)	NO. OF BARS	LENGTH (m)	WEIGHT/LENGTH (Kg/m)	TOTAL WEIGHT (Kg)
ST1	300; 500; 1500; 300; 300	20	6	3.800	2.466	44.391
ST2	320; 100; 400	10	6	1.640	0.617	6.067
ST3	400	10	4	0.400	0.617	0.986
TOTAL BAR BENDING SCHEDULE OF STOPPER						51.444
TOTAL WEIGHT (IN METRIC TON)						0.051

Notes on Elastomeric Bearings

The dimensions and properties of the bearings shown are tentative, based on IRC:83-2018, Part II, Table B2. The actual design shall be carried out by the manufacturer on the basis of provided load & deformation data. The effective stiffness shall not exceed the shown value.

Lateral stiffness corresponding to overall area and total thickness of elastomer = 2514 N/mm

Design Data for Bearings (Elastomeric Bearing)	All Loads Unfactored
Maximum permanent and superimposed dead loads	447.1 kN
Maximum load from surfacing (wearing course)	29.3 kN
Maximum live load reaction (including impact)	512.7 kN
Maximum horizontal seismic force	80 kN
Maximum braking force	101.9 kN
Total maximum elongation of the deck	8 mm
Maximum rotation due to dead load	0.0023 rad
Maximum rotation due to dead load + live load	0.0039 rad
Concrete for superstructure	M 30
Concrete for substructure	M25/M30
Width of girder at bearings	400 mm
Length of bearing (along bridge axis) assumed	320 mm
Proposed type of bearings at both ends:	
Reinforced Elastomeric bearing partially free (up to 40mm) along the bridge axis, restrained at transverse direction and free to rotate in all direction, as shown in the sketches.	

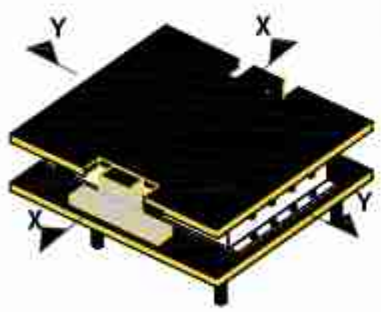

Elastrometric Bearing
(partially free at longitudal direction
Fixed at Transverse direction)

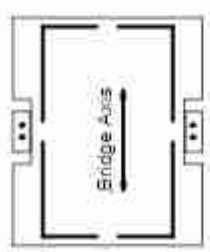

Elastomatric Bearing
Scale:-1:25

Section Y-Y
Scale:-1:25

Section X-X
Scale:-1:25

Government of Nepal Ministry of Physical Infrastructure and Transport **Department of Roads** **Project Directorate Office (ADB)** **SASEC Highway Improvement Project-** Project Preparatory Consultant (SHIP-PPC) ADB Loan No: 3722-NEP	**CONSULTANT:** Soosung Engineering Co. Ltd, Korea in association with ERMC P (Ltd) and Tech Studio of Engineeering Nepal	**IMPLEMENTING AGENCY:** **DOR, DCID** **ROAD NAME:** **East West Highway (H01)** **Butwal - Gorusinghe Section**	**SHEET TITLE:** Miscellaneous Details - 2 of Pahila Bridge (46/H001/304_A)	**SCALE:** As Shown		**NAME**	**SIGNATURE**	**REV NO.**	**DESCRIPTION**	**DATE:** November , 2022 **DWG.NO.:** 304_Pahila **SHEET NO.:** 21/26
					Designed by:	Saroj Bhattarai				
					Checked by:	P. Upadhyaya				
					Approved by:	Dr. T.H.Choi				

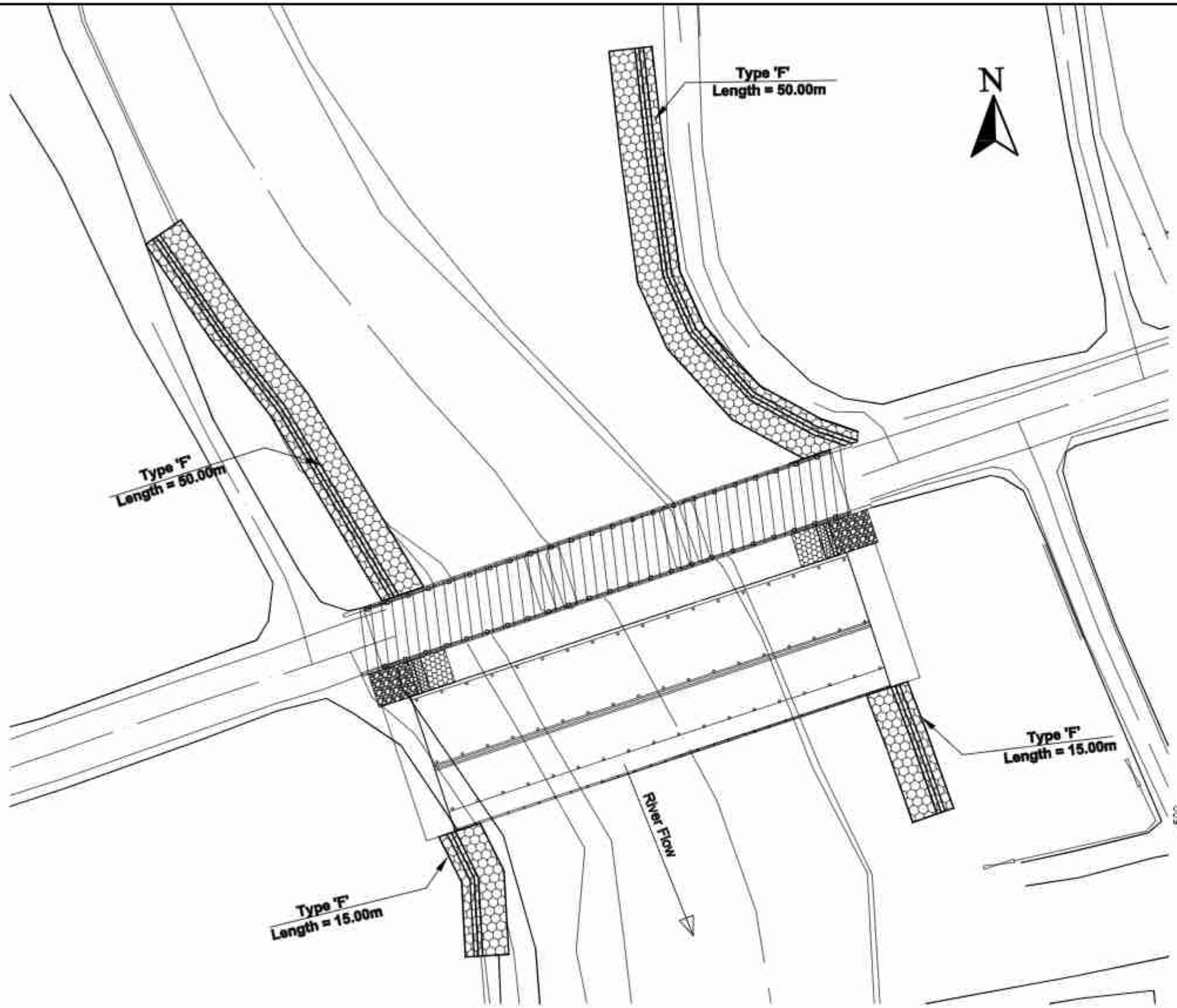

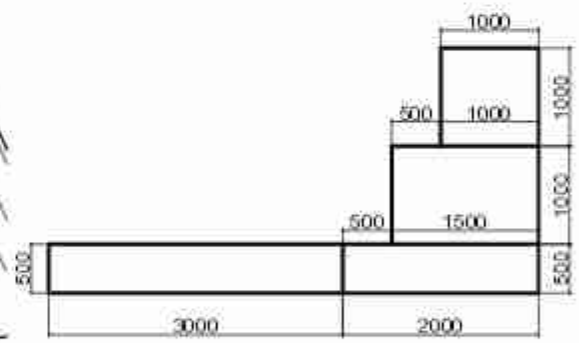

"F" Type River Training Structure
Scale:- 1:75

Government of Nepal Ministry of Physical Infrastructure and Transport **Department of Roads** **Project Directorate Office (ADB)** **SASEC Highway Improvement Project-** Project Preparatory Consultant (SHIP-PPC) ADB Loan No: 3722-NEP	**CONSULTANT:** Soosung Engineering Co. Ltd, Korea in association with ERMC P (Ltd) and Tech Studio of Engineering Nepal	**IMPLEMENTING AGENCY:** **DOR, DCID** **ROAD NAME:** **East West Highway (H01)** **Butwal - Gorusinghe Section**	**SHEET TITLE:** River Training Work of Pahila Bridge (46/H001/304_A)	**SCALE:** As Shown		**NAME**	**SIGNATURE**	**REV NO.**	**DESCRIPTION**	**DATE:** November , 2022 **DWG.NO.:** 304_Pahila **SHEET NO.:** 22/26
					Designed by:	Saroj Bhattarai				
					Checked by:	P. Upadhyaya				
					Approved by:	Dr. T.H.Choi				

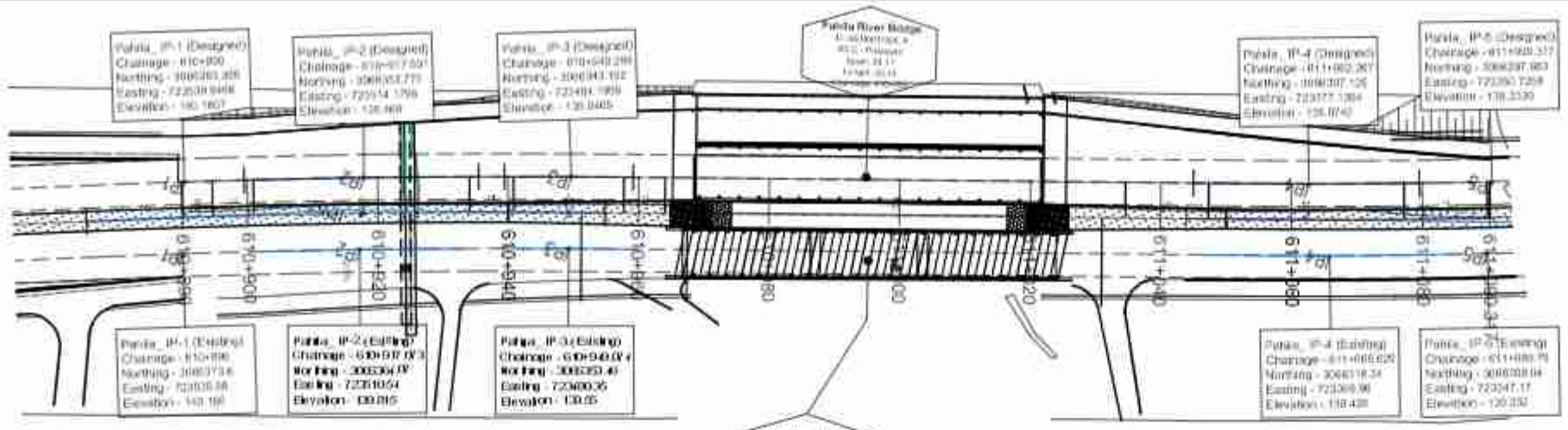

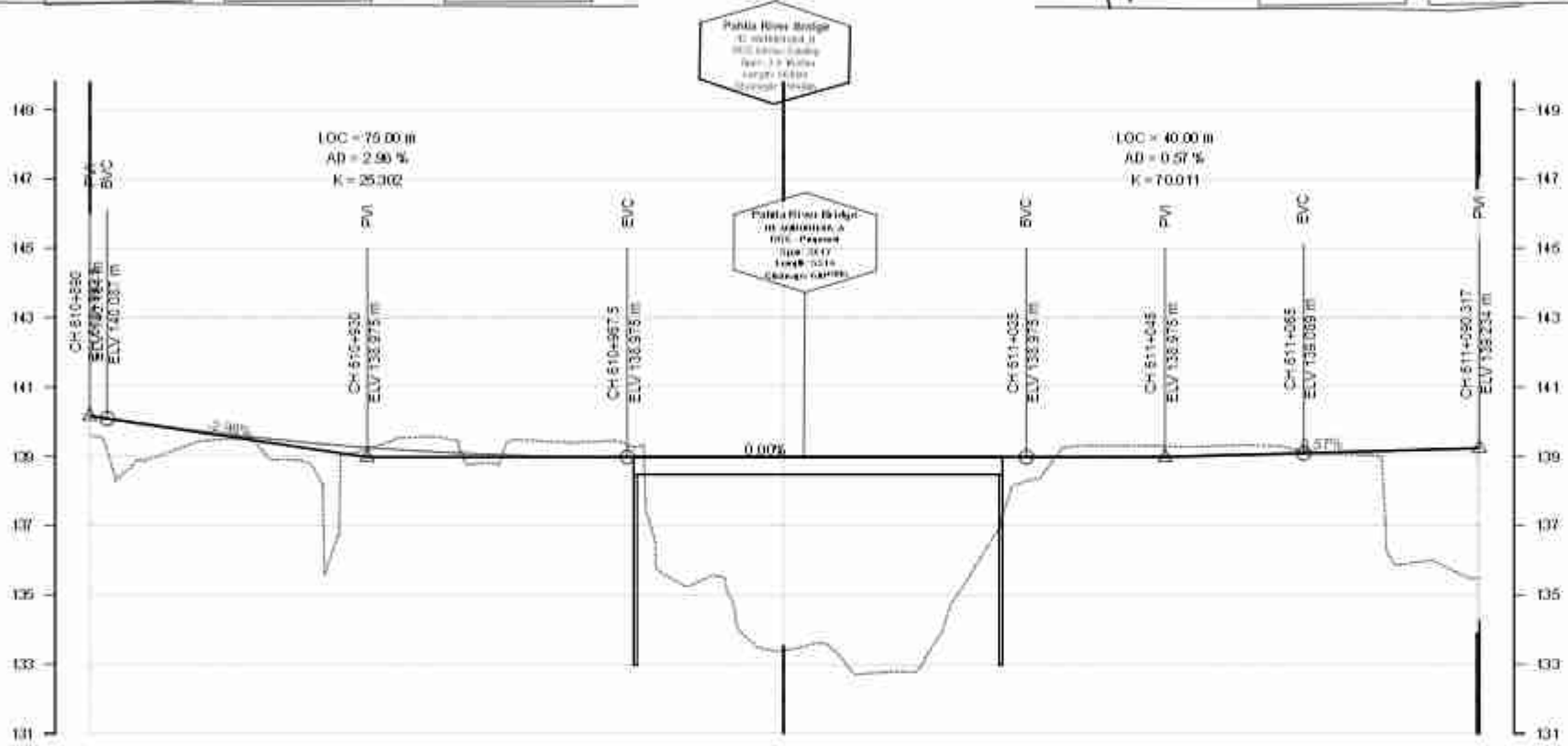

DESIGN LEVEL(m)	140.161, 139.875, 139.626, 139.421, 139.253, 139.124, 139.036, 138.986, 138.975, 138.975, 138.975, 138.975, 138.975, 138.975, 138.975, 138.977, 138.991, 139.020, 139.062, 139.118, 139.175, 139.232
EXISTING LEVEL(m)	139.607, 139.622, 139.503, 139.380, 139.217, 139.080, 139.355, 139.397, 139.301, 139.554, 133.398, 132.776, 133.010, 136.695, 139.164, 139.300, 139.285, 139.299, 139.073, 139.901, 139.475
HORIZONTAL ALIGNMENT RIGHT	IP-1 R=0.00; IP-2 R=1500.00; IP-3 R=1500.00; IP-4 R=1500.00
HORIZONTAL ALIGNMENT LEFT	
SUPER ELEVATION	NC, T, -2, T, -2, T, NC, T, 2.5555555555555, T, NC; 610+890, 610+894.826, 610+900.926, 610+934.875, 610+940.833, 610+957.782, 610+964.082, 611+034.364, 611+047.34, 611+077.194, 611+089.849
CHAINAGE(Km)	610+880, 610+890, 610+900, 610+910, 610+920, 610+930, 610+940, 610+950, 610+960, 610+970, 610+980, 610+990, 611+000, 611+010, 611+020, 611+030, 611+040, 611+050, 611+060, 611+070, 611+080, 611+090

Government of Nepal Ministry of Physical Infrastructure and Transport **Department of Roads** **Project Directorate Office (ADB)** **SASEC Highway Improvement Project-** **Project Preparatory Consultant (SHIP-PPC)** **ADB Loan No: 3722-NEP**	**CONSULTANT:** Soosung Engineering Co. Ltd, Korea in association with ERMC P (Ltd), Nepal and TSE-Tech Studio of Engineeering	**IMPLEMENTING AGENCY:** **DOR, DCID** **ROAD NAME:** **East West Highway (H01)** **Butwal - Gorusinghe Section**	**SHEET TITLE:** Plan & Profile of Pahila Bridge 610+890 - 611+090.317	**SCALE:** 0 2 4 6m Vertical Scale 0 10 20 30m Horizontal Scale		**NAME**	**SIGNATURE**	**REV NO.**	**DESCRIPTION**
					DESIGNED BY:	S.B. Shrestha			
					CHECKED BY:	P. Upadhyaya			
					APPROVED BY:	Dr. T.H.Choi			

DATE: November,2022

DWG.NO.: 304_Pahila

SHEET NO. 23/26

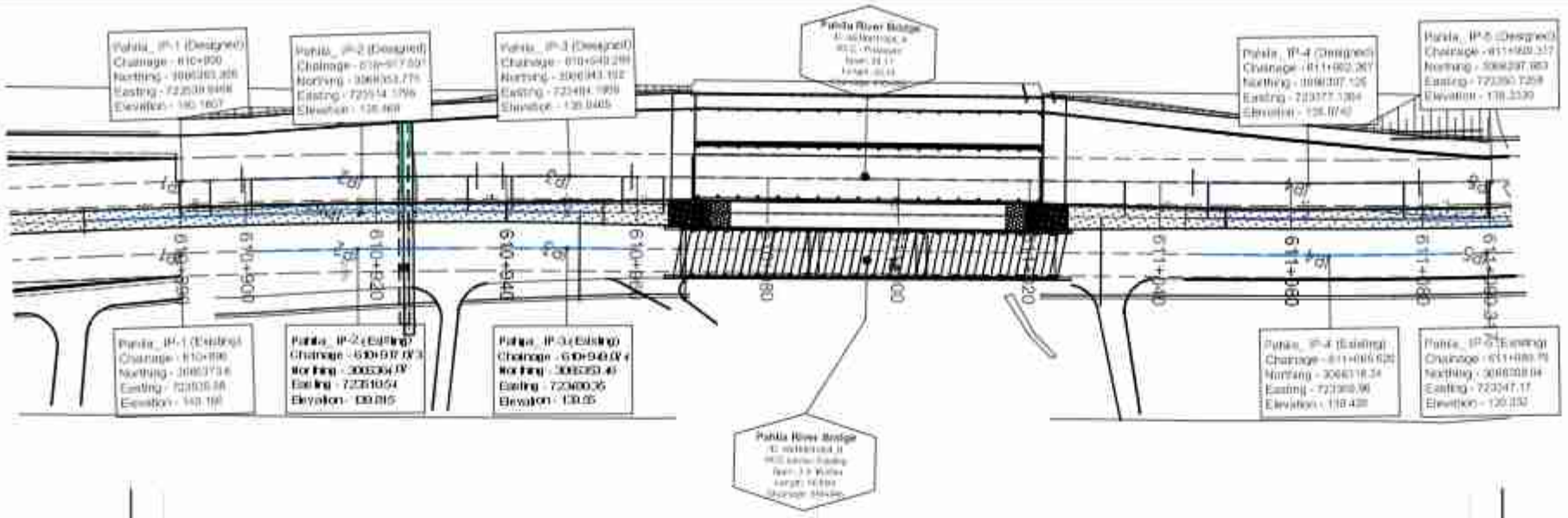

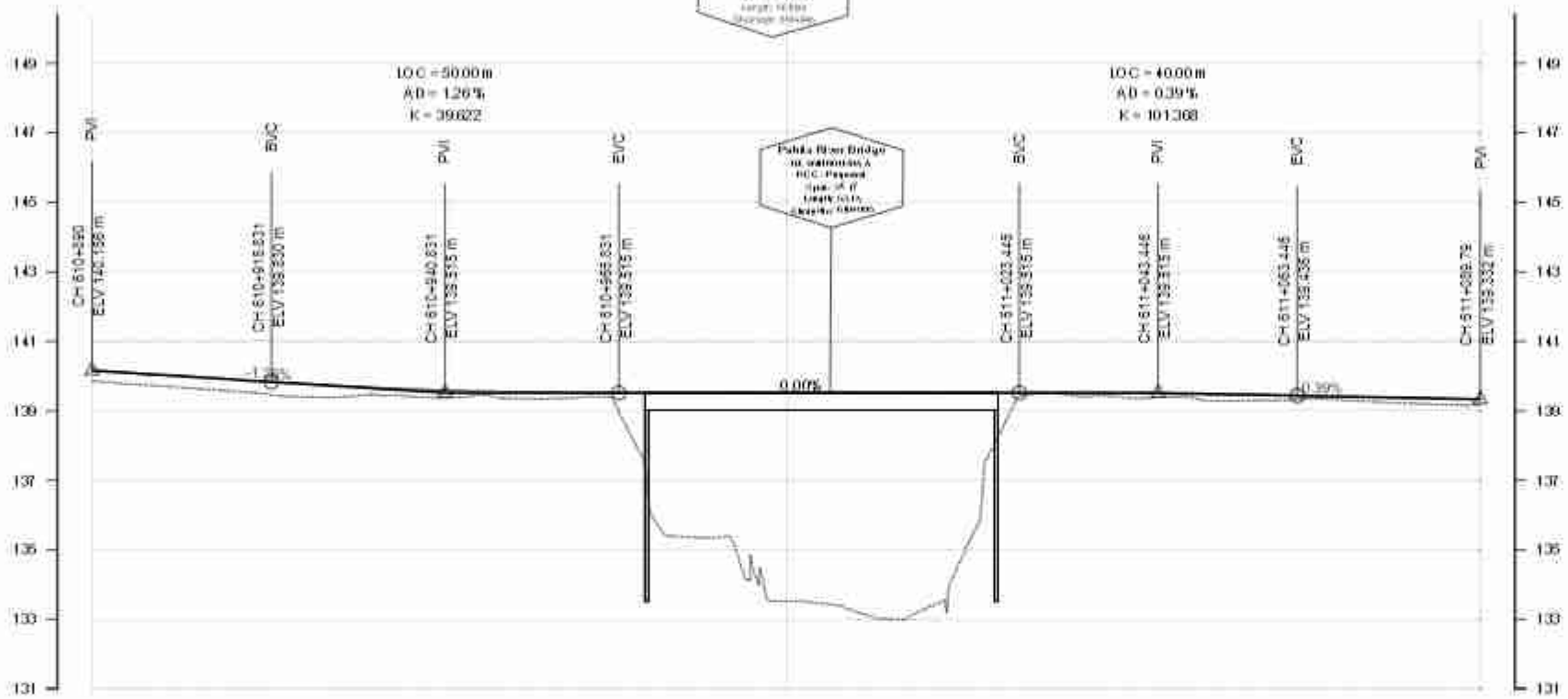

DESIGN LEVEL(m)	140.198, 140.030, 139.904, 139.790, 139.677, 139.599, 139.547, 139.519, 139.515, 139.515, 139.515, 139.515, 139.515, 139.515, 139.513, 139.501, 139.480, 139.449, 139.410, 139.371
EXISTING LEVEL(m)	139.859, 139.712, 139.588, 139.406, 139.457, 139.370, 139.356, 139.362, 139.636, 139.350, 139.519, 139.222, 139.308, 139.097, 139.459, 139.360, 139.264, 139.256, 139.329, 139.210
HORIZONTAL ALIGNMENT RIGHT	IP-2 R=1500.00; IP-3 R=1500.00; IP-4 R=1500.00
HORIZONTAL ALIGNMENT LEFT	IP-1 R=0.00
SUPER ELEVATION	NC; T; 2.555555555555556; T; 2.555555555555556; NC; T; 2.555555555555556; T; NC; 610+892; 610+902.882; 610+905.599; 610+925.547; 610+943.268; 610+955.082; 610+957.599; 611+047.113; 611+050.03; 611+081.227; 611+084.144; 611+089.79
CHAINAGE(Km)	610+890, 610+900, 610+910, 610+920, 610+930, 610+940, 610+950, 610+960, 610+970, 610+980, 610+990, 611+000, 611+010, 611+020, 611+030, 611+040, 611+050, 611+060, 611+070, 611+080

Government of Nepal
Ministry of Physical Infrastructure and Transport
Department of Roads
Project Directorate Office (ADB)
SASEC Highway Improvement Project-
Project Preparatory Consultant (SHIP-PPC)
ADB Loan No: 3722-NEP

CONSULTANT:
Soosung Engineering Co. Ltd, Korea in association with
ERMC P (Ltd), Nepal
and
TSE-Tech Studio of Engineeering

IMPLEMENTING AGENCY:
DOR, DCID

ROAD NAME:
East West Highway (H01)

Butwal - Gorusinghe Section

SHEET TITLE:
Plan & Profile of Existing Pahila Bridge
610+890 - 611+089.79

SCALE:
Vertical Scale: 0 2 4 6m
Horizontal Scale: 0 10 20 30m

	NAME	SIGNATURE	REV NO.	DESCRIPTION
DESIGNED BY:	S.B. Shrestha			
CHECKED BY:	P. Upadhyaya			
APPROVED BY:	Dr. T.H.Choi			

DATE: November,2022
DWG.NO.: 304_Pahila
SHEET NO. 23/26

Ch:610+850
GL:140.672
DL:141.000
GL: 140.841
DL: 141.221
GL: 138.244
DL: 141.057

Ch:610+860
GL:140.439
DL:140.759
GL: 140.256
DL: 141.014
GL: 140.417
DL: 140.766

Ch:610+870
GL:140.140
DL:140.539
GL: 140.102
DL: 140.824
GL: 140.116
DL: 140.475

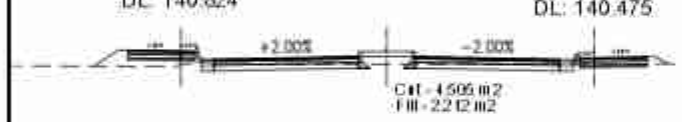

Ch:610+880
GL:139.902
DL:140.341
GL: 139.981
DL: 140.637
GL: 139.797
DL: 140.184

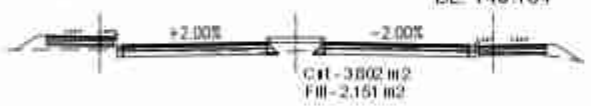

Ch:610+890
GL:139.716
DL:140.164

Ch:610+900
GL:139.515
DL:140.008
GL: 139.010
DL: 139.875
GL: 139.717
DL: 140.030

Ch:610+910
GL:139.380
DL:139.874
GL: 139.501
DL: 139.628
GL: 139.573
DL: 139.904

Ch:610+920
GL:139.364
DL:139.761
GL: 138.882
DL: 139.421
GL: 139.408
DL: 139.780

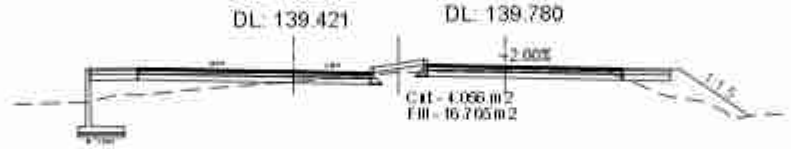

Ch:610+930
GL:139.344
DL:139.669
GL: 139.213
DL: 139.253
GL: 139.455
DL: 139.677

Ch:610+940
GL:139.410
DL:139.599
GL: 139.560
DL: 139.124
GL: 139.369
DL: 139.599

Ch:610+950
GL:139.231
DL:139.550
GL: 139.363
DL: 139.036
GL: 139.358
DL: 139.547

Ch:610+960
GL:139.408
DL:139.522
GL: 139.397
DL: 138.986
GL: 139.373
DL: 139.519

Ch:610+970
GL:139.366
DL:139.515
GL: 138.106
DL: 138.975
GL: 137.577
DL: 139.515

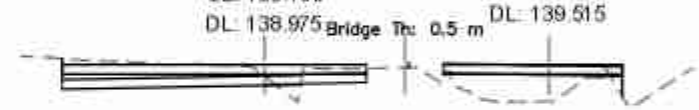

Ch:610+980
GL:135.518
DL:139.515
GL: 135.553
DL: 138.975
GL: 135.335
DL: 139.515

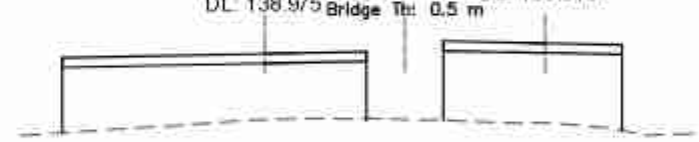

Ch:610+990
GL:133.444
DL:139.515
GL: 133.390
DL: 138.975
GL: 133.520
DL: 139.515

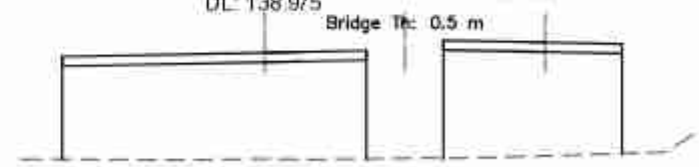

Government of Nepal Ministry of Physical Infrastructure and Transport **Department of Roads** **Project Directorate Office (ADB)** **SASEC Highway Improvement Project-** **Project Preparatory Consultant (SHIP-PPC)** **ADB Loan No: 3722-NEP**	**CONSULTANT:** Soosung Engineering Co. Ltd, Korea in association with ERMC P (Ltd), Nepal and TSE-Tech Studio of Engineeering	**IMPLEMENTING AGENCY:** **DOR, DCID** **ROAD NAME:** **East West Highway (H01)** **Butwal - Gorusinghe Section**	**SHEET TITLE:** Cross Section of Ch:610+850 - 610+990	**SCALE:** 0 2 4 6m vertical scale 0 10 20 30m horizontal scale		**NAME**	**SIGNATURE**	**REV NO.**	**DESCRIPTION**	**DATE:** November,2022 **DWG.NO.:** 304_Pahila **SHEET NO.** 23.1.26
					DESIGNED BY:	S.B. Shrestha				
					CHECKED BY:	P. Upadhyaya				
					APPROVED BY:	Dr. T.H.Choi				

Ch:611+000
GL:132.992
DL:139.515

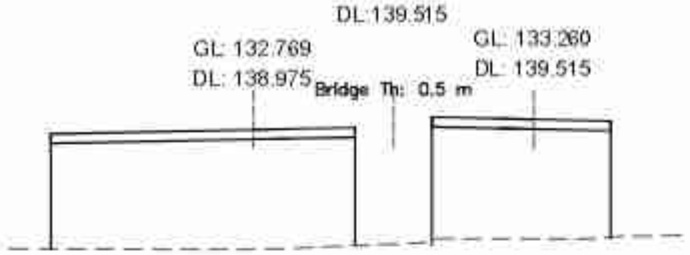

Ch:611+010
GL:132.750
DL:139.515

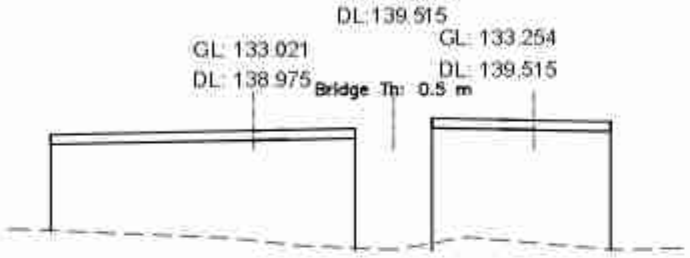

Ch:611+020
GL:136.741
DL:139.515

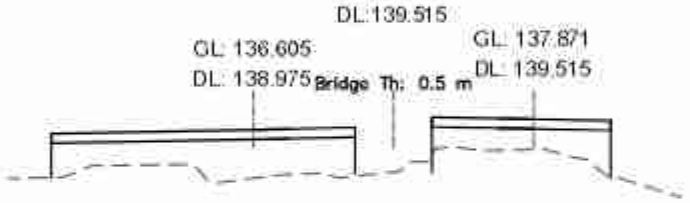

Ch:611+030
GL:139.205
DL:139.505

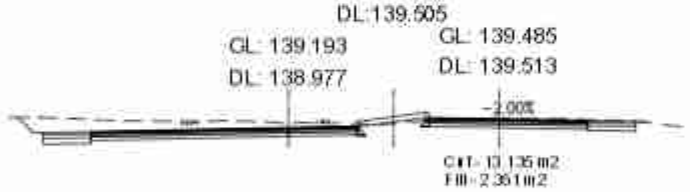

Ch:611+040
GL:139.309
DL:139.474

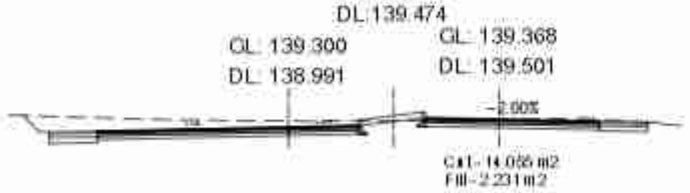

Ch:611+050
GL:139.234
DL:139.421

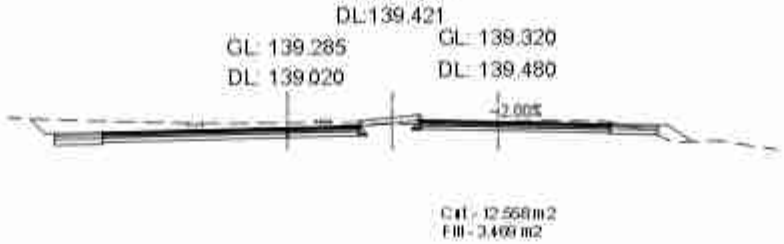

Ch:611+060
GL:139.192
DL:139.348

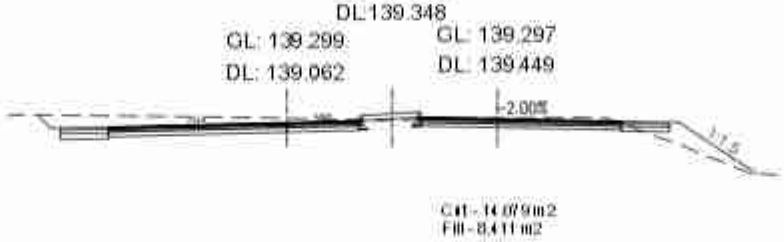

Ch:611+070
GL:139.153
DL:139.284

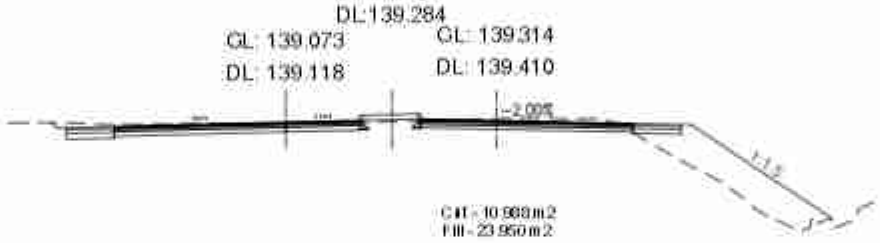

Ch:611+080
GL:138.647
DL:139.247

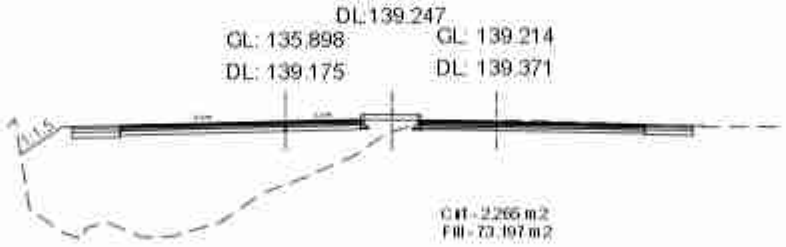

Ch:611+090
GL:138.039
DL:139.236

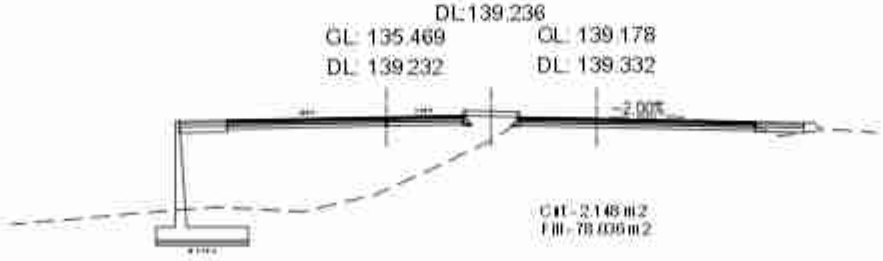

Ch:611+100
GL:132.616
DL:139.236

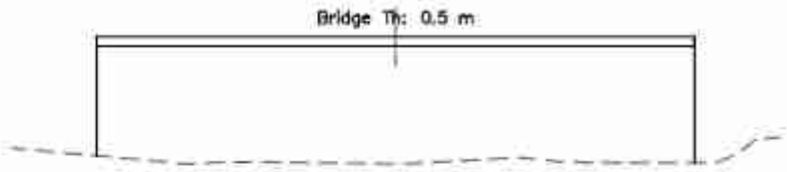

Ch:611+110
GL:138.768
DL:139.236

Ch:611+120
GL:138.978
DL:139.235

Ch:611+130
GL:138.934
DL:139.228

Ch:611+140
GL:138.874
DL:139.213

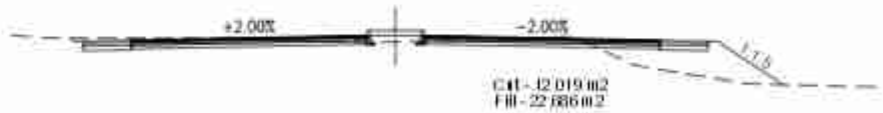

Government of Nepal Ministry of Physical Infrastructure and Transport **Department of Roads** **Project Directorate Office (ADB)** **SASEC Highway Improvement Project-** **Project Preparatory Consultant (SHIP-PPC)** **ADB Loan No: 3722-NEP**	**CONSULTANT:** Soosung Engineering Co. Ltd, Korea in association with ERMC P (Ltd), Nepal and TSE-Tech Studio of Engineeering	**IMPLEMENTING AGENCY:** **DOR, DCID** **ROAD NAME:** **East West Highway (H01)** **Butwal - Gorusinghe Section**	**SHEET TITLE:** Cross Section of Ch:611+000 - 611+140	**SCALE:** 0 2 4 6m vertical scale 0 10 20 30m horizontal scale		**NAME**	**SIGNATURE**	**REV NO.**	**DESCRIPTION**	**DATE:** November,2022 **DWG.NO.:** 304_Pahila **SHEET NO.** 23/26
					DESIGNED BY:	S.B. Shrestha				
					CHECKED BY:	P. Upadhyaya				
					APPROVED BY:	Dr. T.H.Choi				

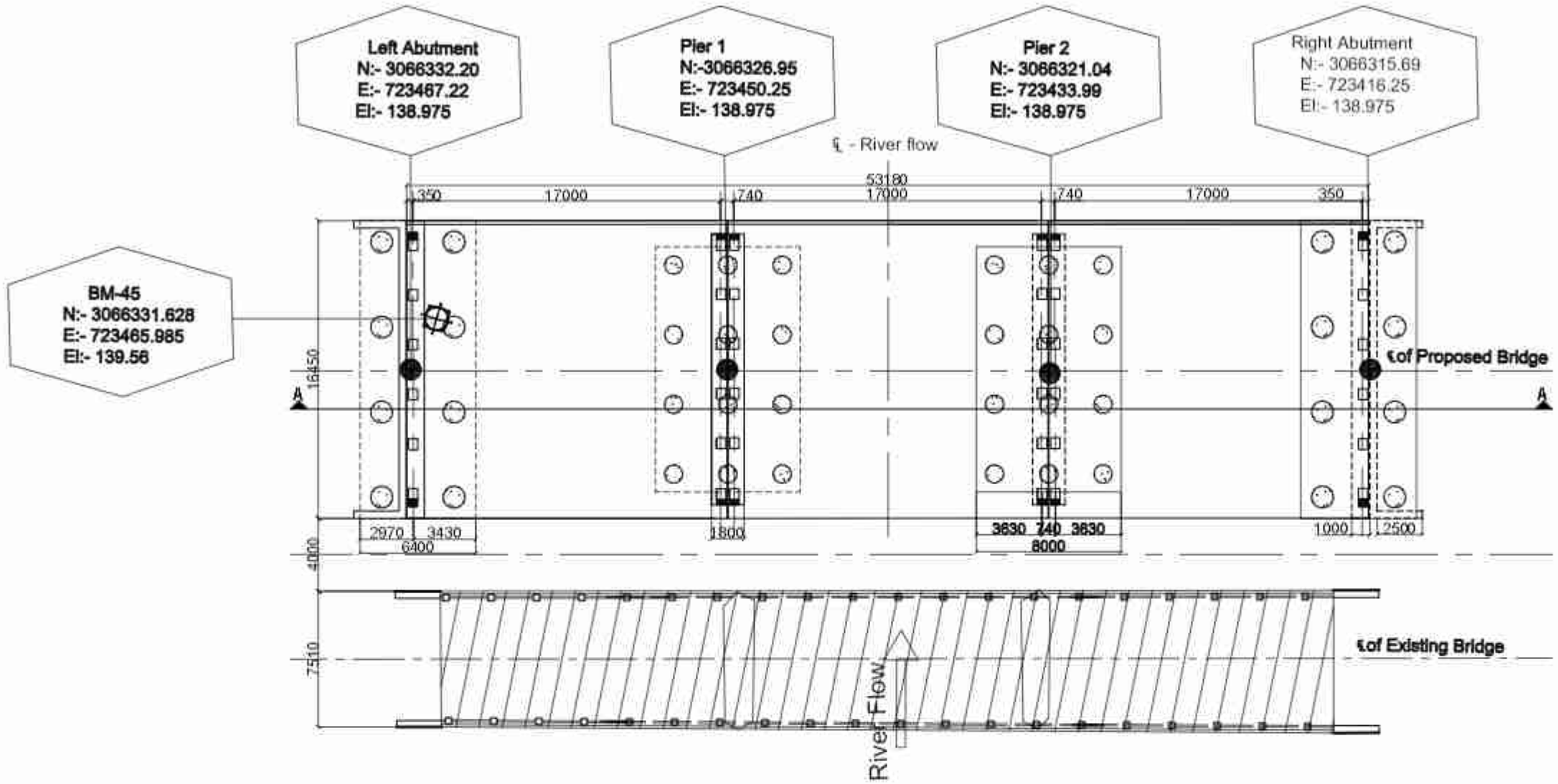

Layout Plan
Scale:-1:300

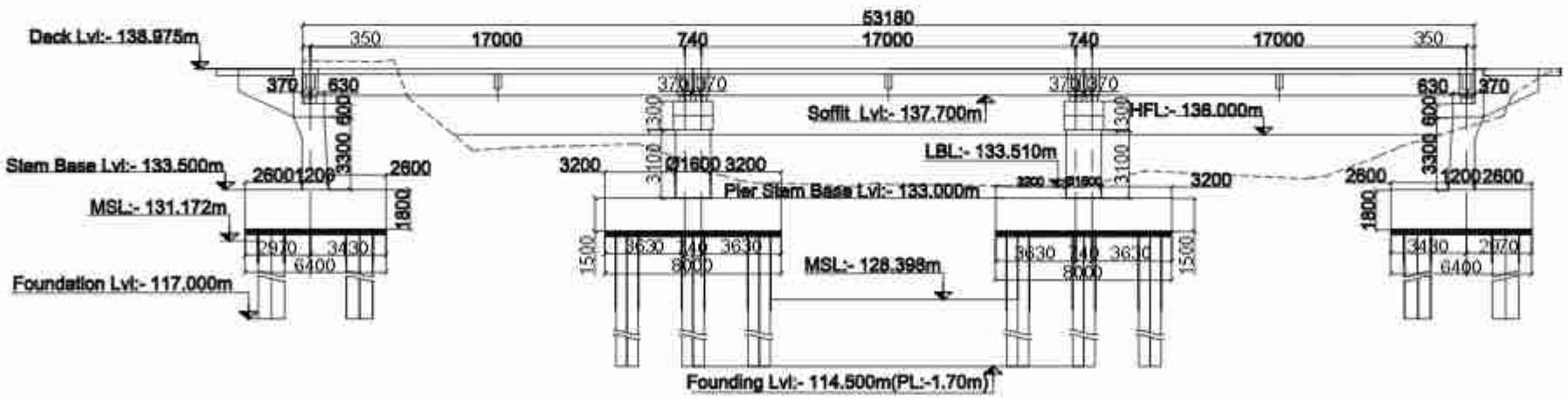

Half Sectional Elevation
Scale:-1:300

Government of Nepal Ministry of Physical Infrastructure and Transport **Department of Roads** **Project Directorate Office (ADB)** **SASEC Highway Improvement Project-** **Project Preparatory Consultant (SHIP-PPC)** **ADB Loan No: 3722-NEP**	**CONSULTANT:** Soosung Engineering Co. Ltd, Korea in association with ERMC P. (Ltd) and Tech Studio of Engineeering Nepal	**IMPLEMENTING AGENCY:** **DOR, DCID** **ROAD NAME:** **East West Highway (H01)** **Butwal - Gorusinghe Section**	**SHEET TITLE:** Layout Plan of **Pahila Bridge** (464-H001/304_A)	**SCALE:** As Shown		NAME	SIGNATURE	REV NO.	DESCRIPTION	DATE: November , 2022 DWG.NO.: 304_Pahila SHEET NO.: 25/26
					Designed by:	Saroj Bhattarai				
					Checked by:	P. Upadhyaya				
					Approved by:	Dr. T.H.Choi				

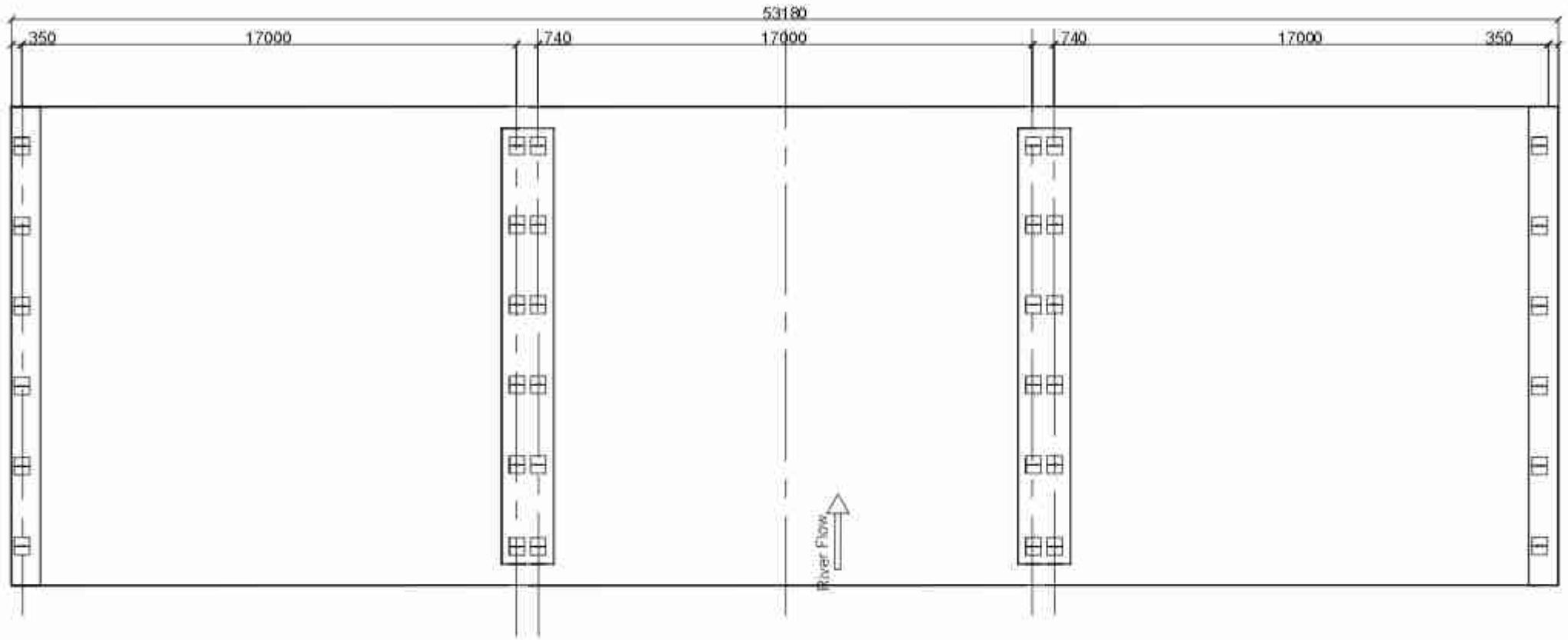

Layout of Bearing

Scale:-1:200

Legend

Elastomeric bearing.
Partial movement allowed in longitudinal direction.
Restrained to transverse movement.Free to rotate in any direction.

Fixed Pot-bearing.
Restrainde to lateral movement,Free to rotate in aney direction.

Free Pot-bearing.
Partial movement allowed in longitudinal direction.
Restrained to transverse movement.Free to rotate in any direction.

Government of Nepal Ministry of Physical Infrastructure and Transport **Department of Roads** **Project Directorate Office (ADB)** **SASEC Highway Improvement Project-** **Project Preparatory Consultant (SHIP-PPC)** **ADB Loan No: 3722-NEP**	**CONSULTANT:** Soosung Engineering Co. Ltd, Korea in association with ERMC P (Ltd) and Tech Studio of Engineeering Nepal	**IMPLEMENTING AGENCY:** **DOR, DCID** **ROAD NAME:** **East West Highway (H01)** **Butwal - Gorusinghe Section**	**SHEET TITLE:** Layout Plan of **Pahila Bridge** (46/H001/304_A)	**SCALE:** As Shown		NAME	SIGNATURE	REV NO.	DESCRIPTION	DATE: November , 2022
					Designed by:	Saroj Bhattarai				DWG.NO.: 304_Pahila
					Checked by:	P. Upadhyaya				
					Approved by:	Dr. T.H.Choi				SHEET NO.: 26/26

Government of Nepal

Ministry of Physical Infrastructure and Transport

Department of Roads

Project Directorate (ADB)

Implementing Agency : DOR, DCID

Project Preparatory Consultants

Under

SASEC Highway Improvement Project (SHIP-PPC)

(ADB Loan No: 3722 Nep)

Contract No. SHIP/PPC/2020/02

Dry Nala Bridge(46-H001-305_AB)

St. Ch : 611+095.50 ~ End Ch : 611+107.50

Detailed Drawing

Butwal - Gorusinghe Sector

November,2022

CONTENTS

S.No.	DESCRIPTION	DWG. NO	NO. OF SHEETS
1.	General Notes.	1	1
2.	Topographic Map.	2	1
3.	General Arrangement.	3	1
4.	BorLog Details.	4	1
5.	Concrete Outline.	5	1
6.	Reinforcement Details.	6	1
7.	Typical Drawing of Wing Wall.	7	1
8.	Bar Bending Schedule.	8	1
9.	Layout Plan.	9	1
10.	Plan & Profile.	10 -11	2

GENERAL NOTES

a) Bridge Design Specifications

IRC Standard Specifications and Code of Practice for Road Bridges - All Relevant Sections.

b) Bridge Design Method

Limit State method.

c) Live Load

IRC Class A and IRC Class 70R, Tracked and Wheeled vehicles. Load combinations are adopted as per IRC:6-2017, Section: II, Loads and Load Combinations.

Pedestrian Load: 4kN/m².

d) Concrete

Concrete Class for box, Approach Slab and Safety Kerb is M25.

e) Steel Reinforcement

Reinforcing Steel shall be HYSD bars of grade Fe 500 confirming to IS: 1786-2008.

f) Lap Length

Minimum Lap Length is 65xdiameter of steel reinforcement.

Laps shall be in staggered position.

Lapped bars more tha 50% shall not be allowed.

g) Clear covers

Top Slab

The clear cover to steel reinforcement is 40mm.

Side Wall and Base Slab

The clear cover to steel reinforcement steel is 75mm.

Approach Slab

The clear cover to steel reinforcement steel is 40mm.

Safety Kerb

The clear cover to steel reinforcement steel is 25mm.

h) All dimensions are in millimeters except otherwise mentioned.

Government of Nepal Ministry of Physical Infrastructure and Transport **Department of Roads** **Project Directorate Office (ADB)** **SASEC Highway Improvement Project-** **Project Preparatory Consultant (SHIP-PPC)** **ADB Loan No: 3722-NEP**	**CONSULTANT:** Soosung Engineering Co. Ltd, Korea in association with ERMC P (Ltd) and Tech Studio of Engineeering Nepal	**IMPLEMENTING AGENCY:** **DOR, DCID** **ROAD NAME:** **East West Highway (H01)** **Butwal - Gorusinghe Section**	**SHEET TITLE:** General Notes of **Dry Nala Box Bridge_B - (6X6.3)** (46/H001/305 A,B) CH:611+102	**SCALE:** As Shown		**NAME**	**SIGNATURE**	**REV NO.**	**DESCRIPTION**	**DATE:** Nov 2022
					Designed by:	P.Shrestha				**DWG.NO.:** 305_Dry Nala
					Checked by:	P. Upadhyaya				
					Approved by:	Dr. T.H.Choi				**SHEET NO.:** 01/11

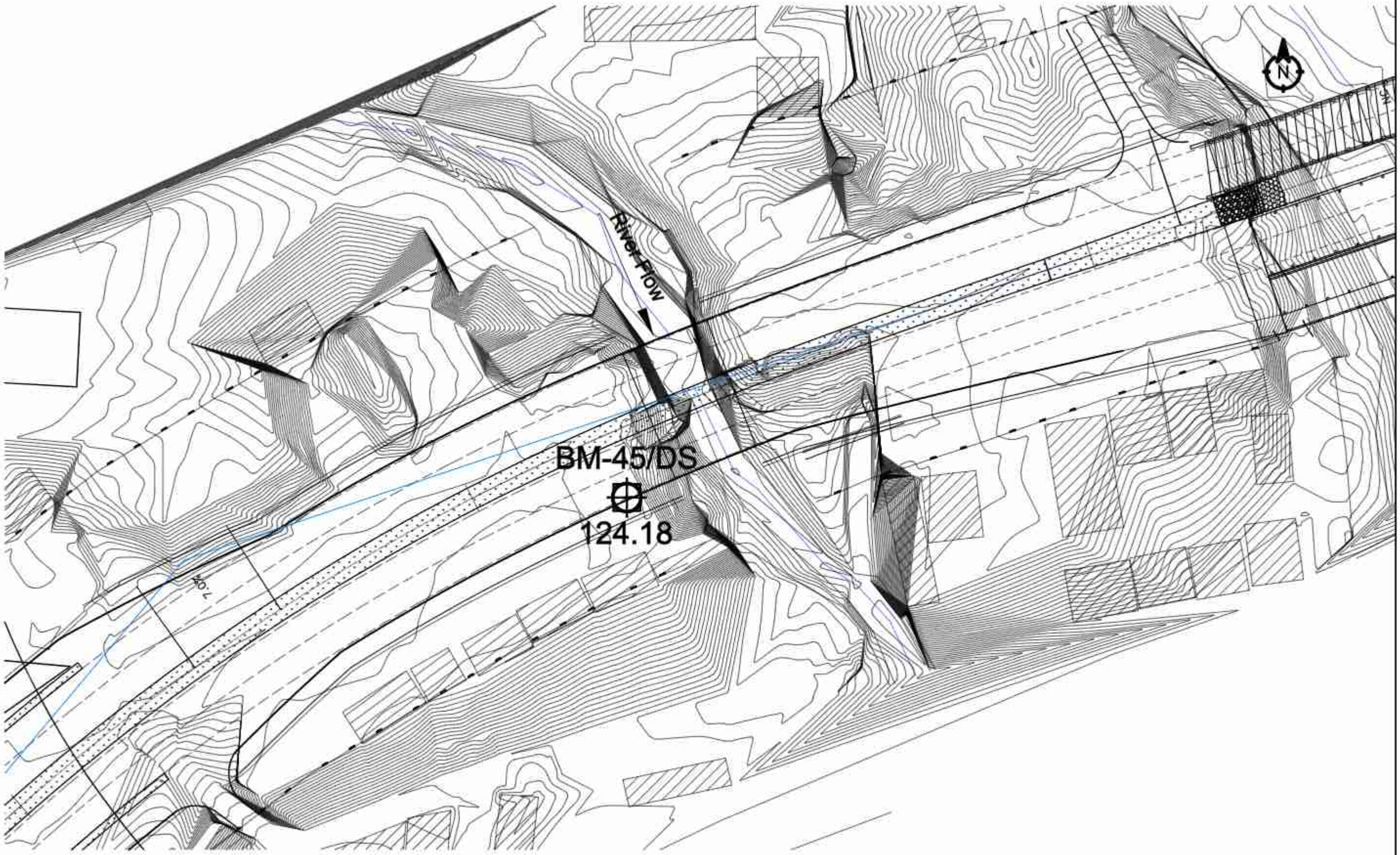

Government of Nepal Ministry of Physical Infrastructure and Transport **Department of Roads** **Project Directorate Office (ADB)** **SASEC Highway Improvement Project-** **Project Preparatory Consultant (SHIP-PPC)** **ADB Loan No: 3722-NEP**	**CONSULTANT:** Soosung Engineering Co. Ltd, Korea in association with ERMC P. (Ltd) and Tech Studio of Engineeering Nepal	**IMPLEMENTING AGENCY:** **DOR, DCID** **ROAD NAME:** **East West Highway (H01)** **Butwal - Gorusinghe Section**	**SHEET TITLE:** Topographic Map of **Dry Nala Box Bridge_B - (6X6.3)** (46/H001/305 A,B) CH-611+102	**SCALE:** 2:1		NAME	SIGNATURE	REV NO.	DESCRIPTION	DATE: Nov,2022
					Designed by:	P.Shrestha				DWG.NO.: 305_Dry Nala
					Checked by:	P. Upadhyaya				
					Approved by:	Dr. T.H.Choi				SHEET NO.: 02/11

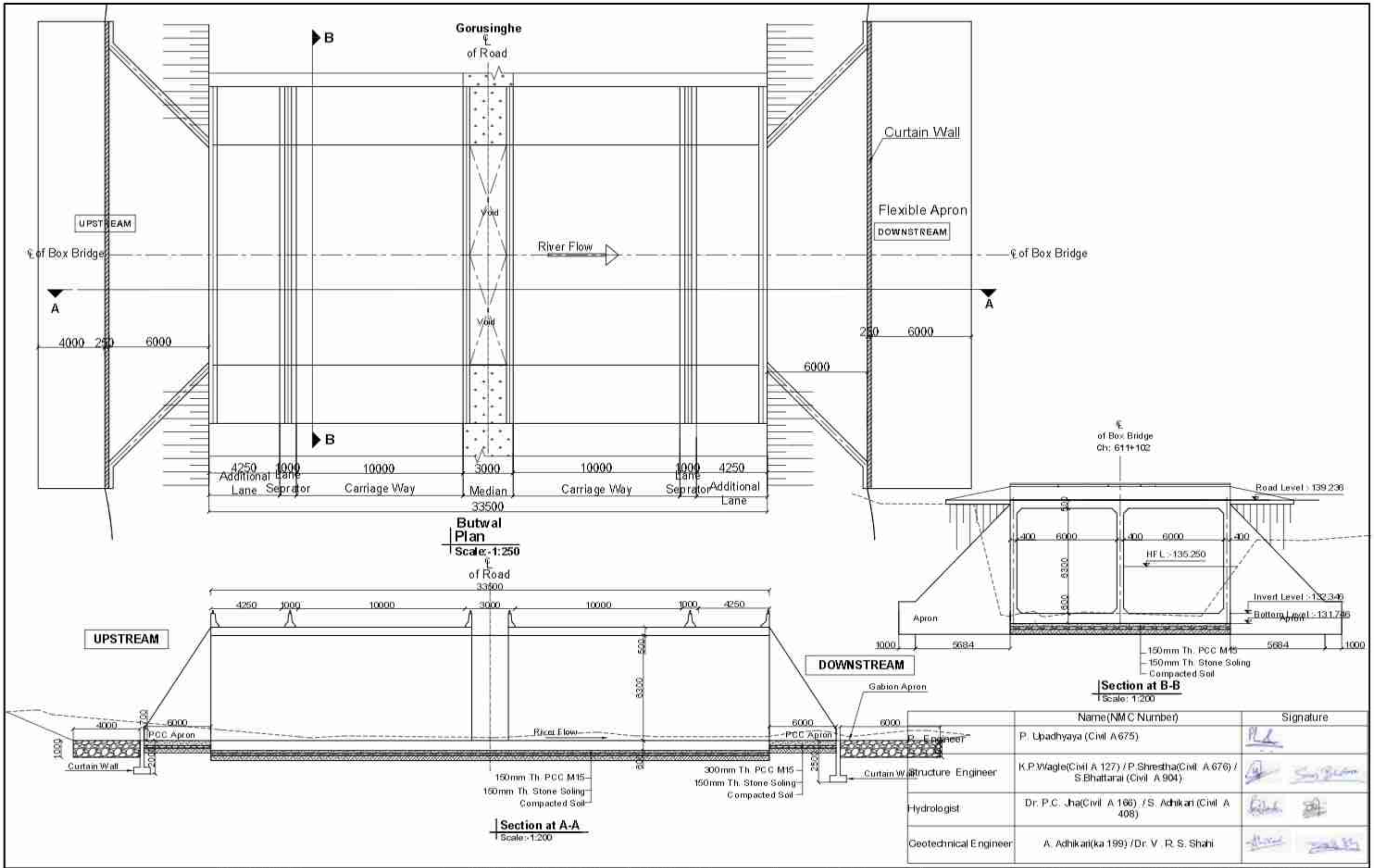

	Name(NMC Number)	Signature
R. Engineer	P. Upadhyaya (Civil A 675)	
Structure Engineer	K.P.Wagle(Civil A 127) / P.Shrestha(Civil A 676) / S.Bhattarai (Civil A 904)	
Hydrologist	Dr. P.C. Jha(Civil A 166) / S. Adhikari (Civil A 408)	
Geotechnical Engineer	A. Adhikari(ka 199) / Dr. V. R. S. Shahi	

Government of Nepal Ministry of Physical Infrastructure and Transport **Department of Roads** **Project Directorate Office (ADB)** **SASEC Highway Improvement Project-** **Project Preparatory Consultant (SHIP-PPC)** **ADB Loan No: 3722-NEP**	**CONSULTANT:** Soosung Engineering Co. Ltd, Korea in association with ERMC P. (Ltd) and Tech Studio of Engineeering Nepal	**IMPLEMENTING AGENCY:** **DOR, DCID** **ROAD NAME:** **East West Highway (H01)** **Butwal - Gorusinghe Section**	**SHEET TITLE:** General Arrangement of **Dry Nala Box Bridge_B - (6X6.3)** (46/H001/305 A,B) CH-611+102	**SCALE:** As Shown		NAME	SIGNATURE	REV NO.	DESCRIPTION	DATE: Nov,2022
					Designed by:	P.Shrestha				DWG.NO.: 305_Dry Nala
					Checked by:	P. Upadhyaya				
					Approved by:	Dr. T.H.Choi				SHEET NO.: 03/11

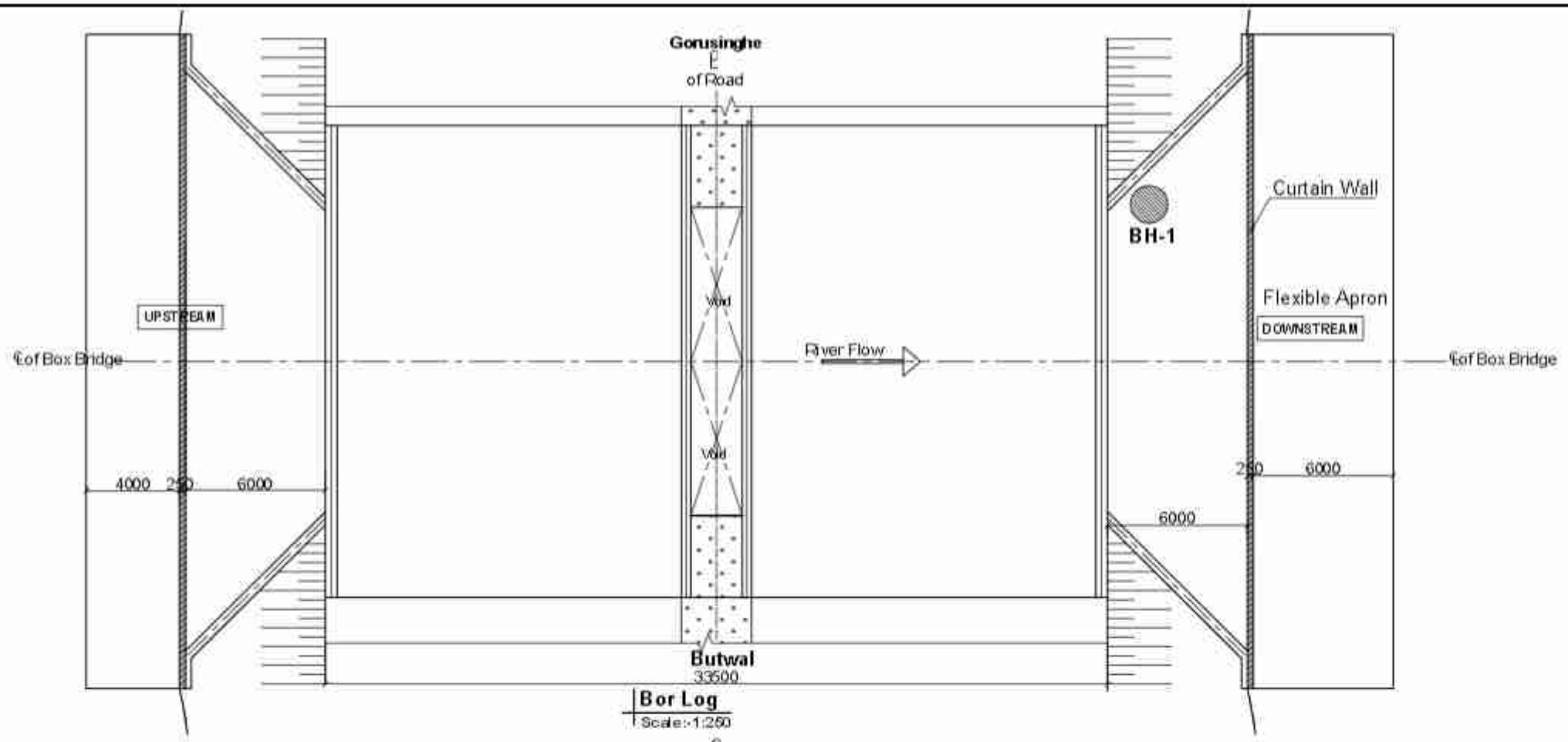

Bor Log
Scale:-1:250

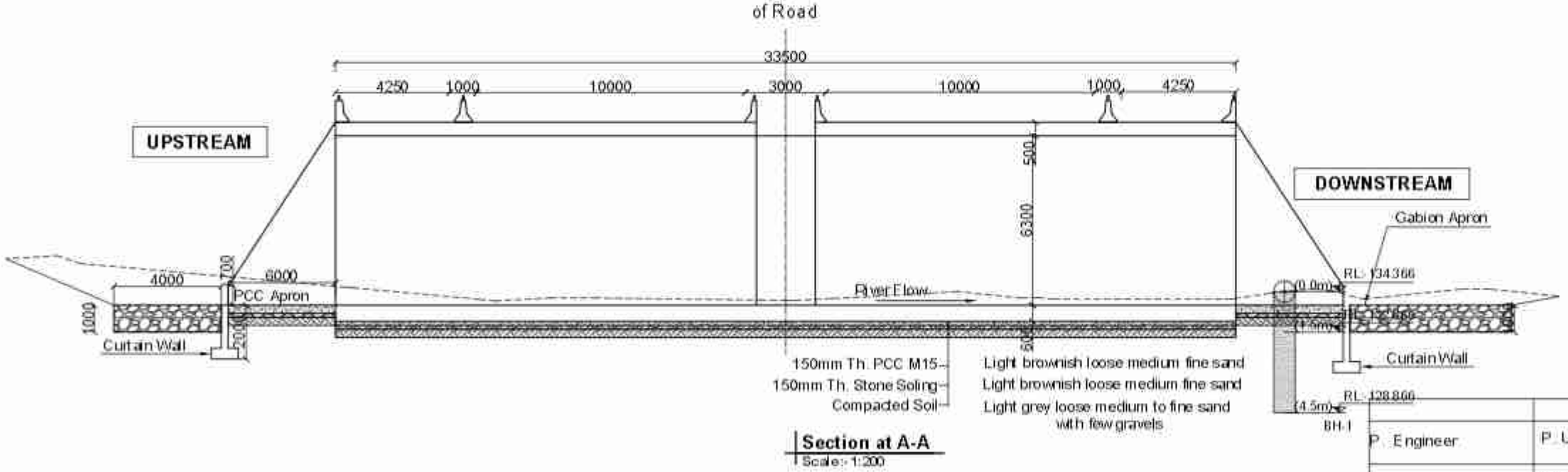

Section at A-A
Scale:- 1:200

	Name(NMC Number)	Signature
P. Engineer	P. Upadhyaya (Civil A 675)	
Structure Engineer	K.P.Wagle(Civil A 127) / P.Shrestha(Civil A 676) / S.Bhattarai (Civil A 904)	
Hydrologist	Dr. P.C. Jha(Civil A 166) / S. Adhikari (Civil A 408)	
Geotechnical Engineer	A. Adhikari(ka 199) / Dr. V. R. S. Shah	

Government of Nepal
Ministry of Physical Infrastructure and Transport
Department of Roads
Project Directorate Office (ADB)
SASEC Highway Improvement Project-
Project Preparatory Consultant (SHIP-PPC)
ADB Loan No: 3722-NEP

CONSULTANT:
Soosung Engineering Co. Ltd, Korea
in association with
ERMC P (Ltd)
and
Tech Studio of Engineeering Nepal

IMPLEMENTING AGENCY:
DOR, DCID

ROAD NAME:
East West Highway (H01)
Butwal - Gorusinghe Section

SHEET TITLE:
Bor Log Details
of
Dry Nala Box Bridge_B - (6X6.3)
(46/H001/305 A,B)
CH-611+102

SCALE:
As Shown

	NAME	SIGNATURE	REV NO.	DESCRIPTION
Designed by:	P.Shrestha			
Checked by:	P. Upadhyaya			
Approved by:	Dr. T.H.Choi			

DATE: Nov,2022
DWG.NO.: 305_Dry Nala
SHEET NO.: 04/11

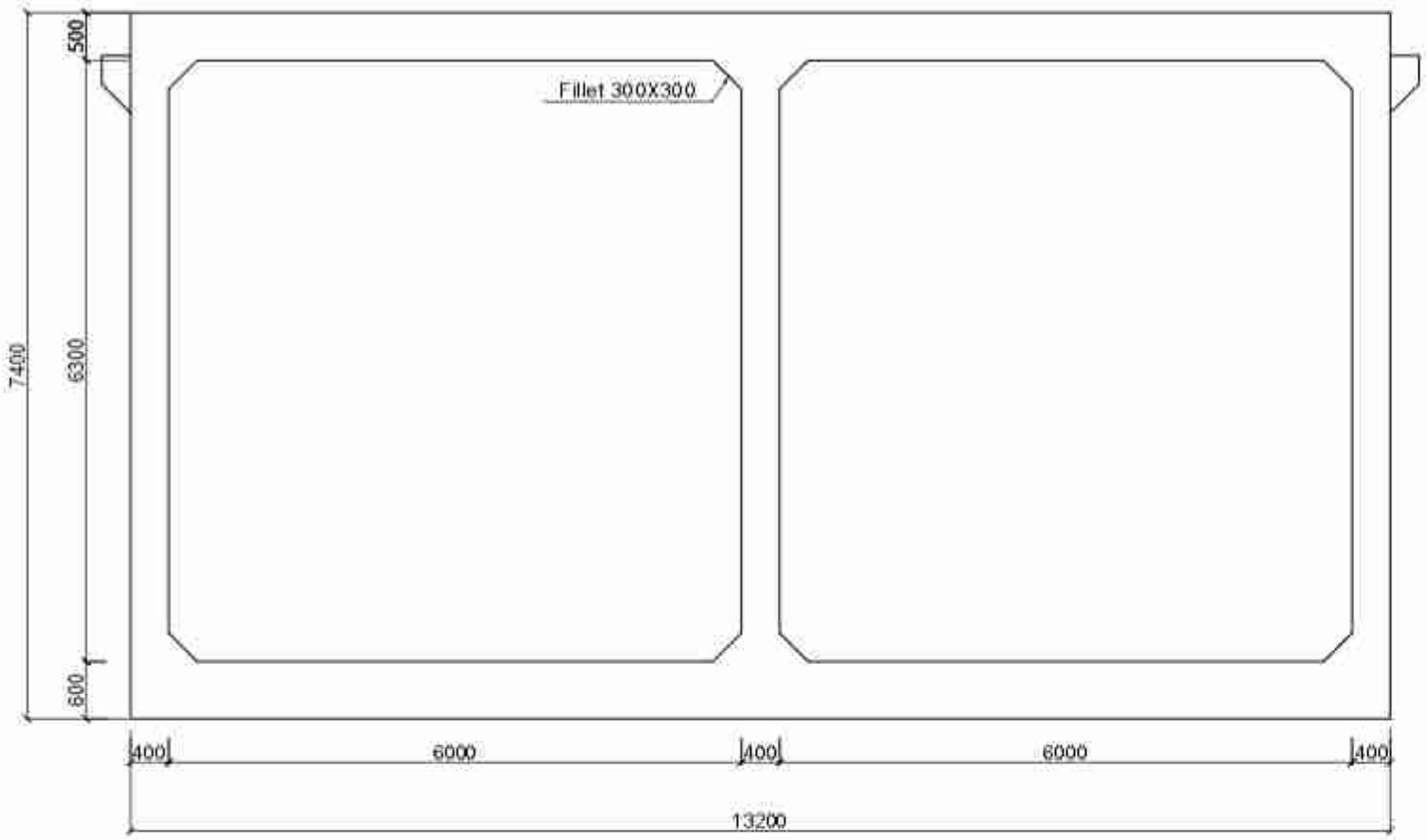

Concrete Outlines (Sectional Elevation)
Scale:-1:75

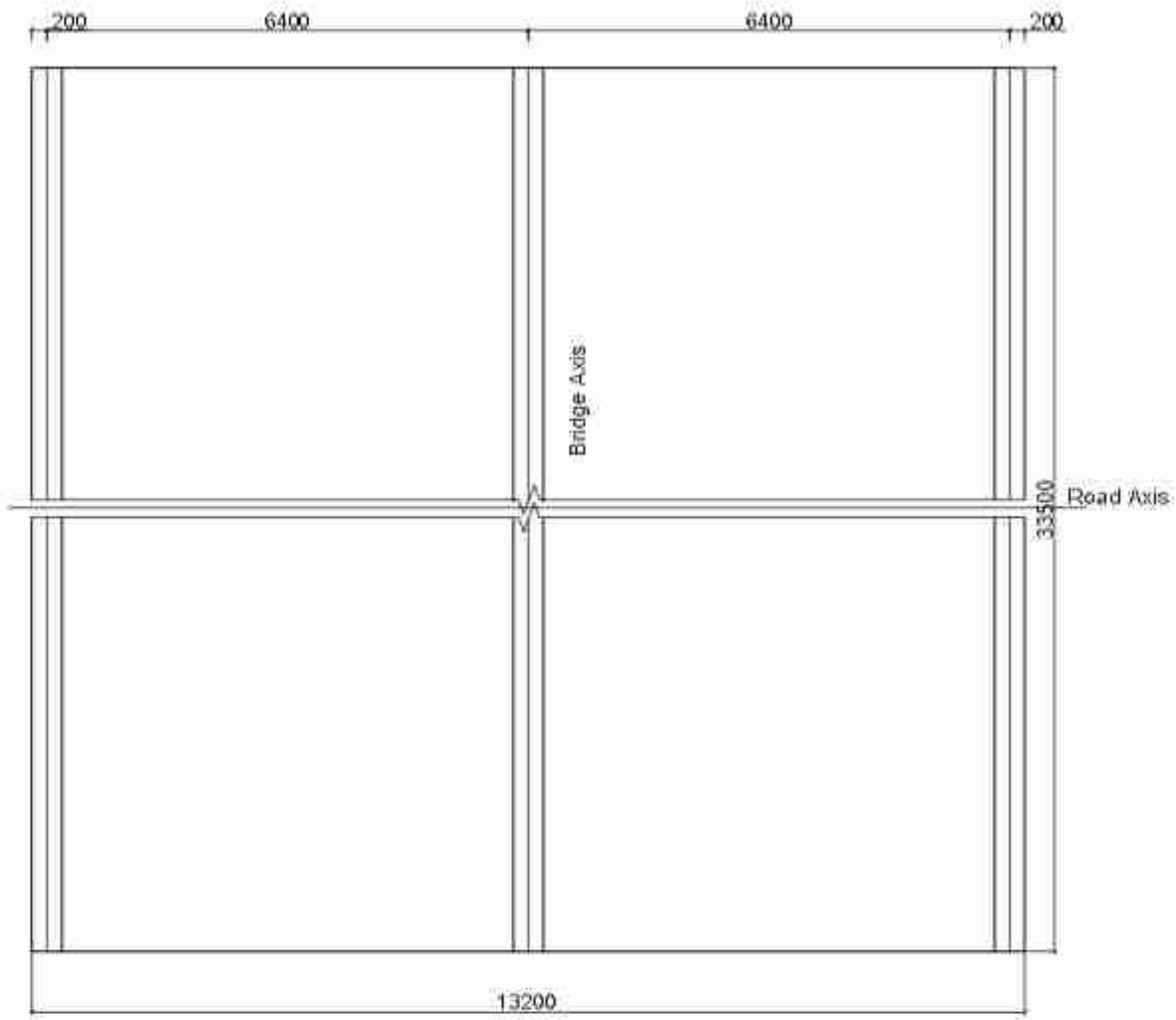

Concrete Outlines (Plan)
Scale:-1:100

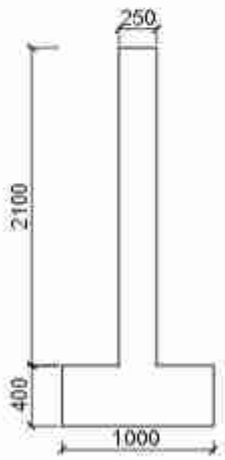

Curtain Wall D/S
Scale:-1:50

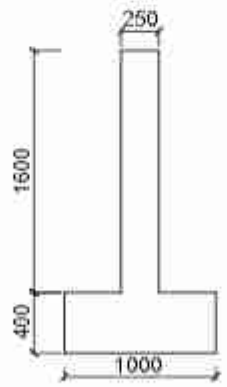

Curtain Wall U/S
Scale:-1:50

Government of Nepal Ministry of Physical Infrastructure and Transport **Department of Roads** **Project Directorate Office (ADB)** **SASEC Highway Improvement Project-** **Project Preparatory Consultant (SHIP-PPC)** **ADB Loan No: 3722-NEP**	**CONSULTANT:** Soosung Engineering Co. Ltd, Korea in association with ERMC P (Ltd) and Tech Studio of Engineeering Nepal	**IMPLEMENTING AGENCY:** **DOR, DCID** **ROAD NAME:** **East West Highway (H01)** **Butwal - Gorusinghe Section**	**SHEET TITLE:** Concrete Outline of **Dry Nala Box Bridge_B - (6X6.3)** (46/H001/305 A,B) CH-611+102	**SCALE:** As Shown		NAME	SIGNATURE	REV NO.	DESCRIPTION	DATE: Nov,2022
					Designed by:	P.Shrestha				
					Checked by:	P. Upadhyaya				DWG.NO.: 305_Dry Nala
					Approved by:	Dr. T.H.Choi				SHEET NO.: 05/11

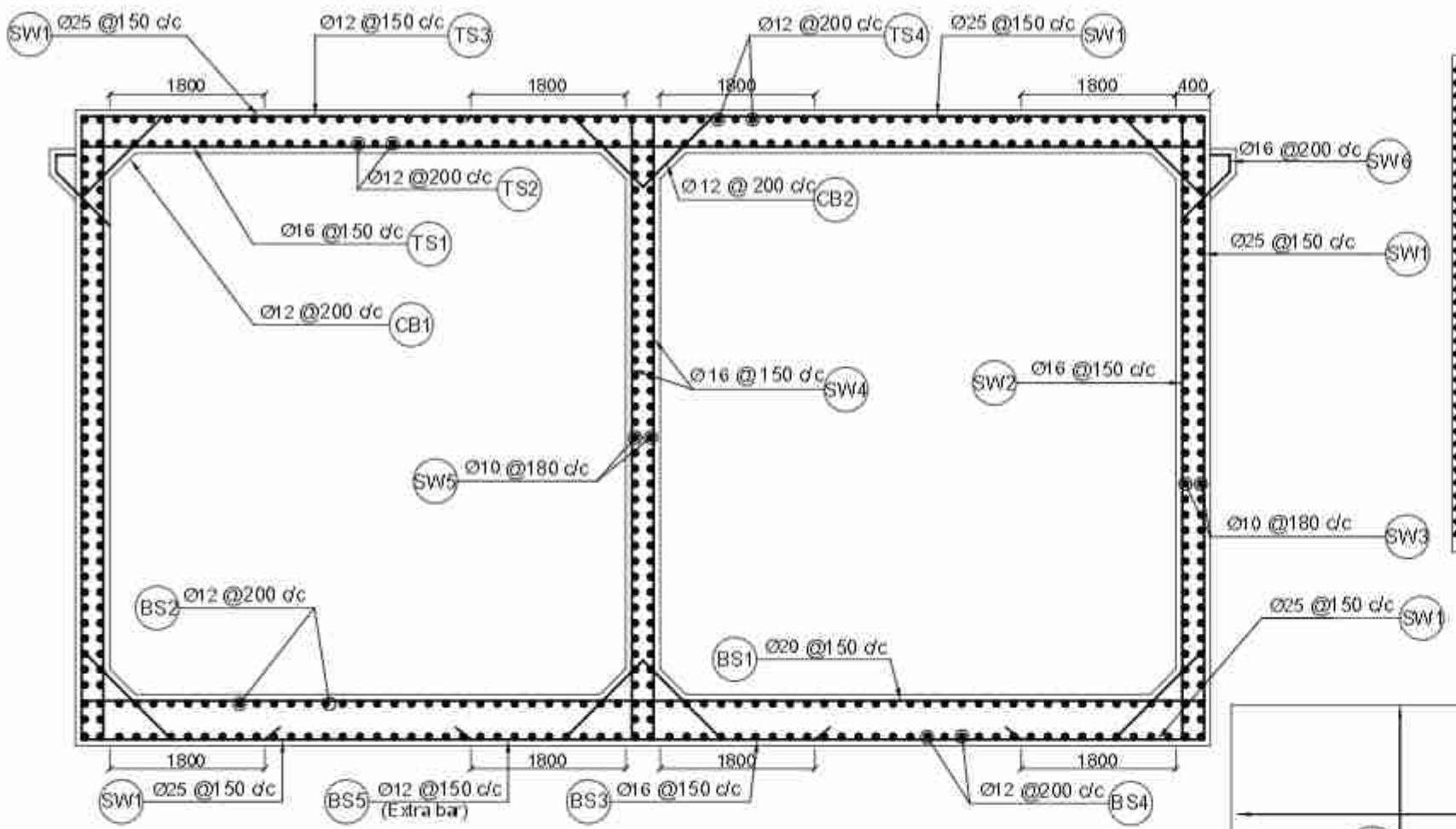

Sectional Elevation
Scale:-1:75

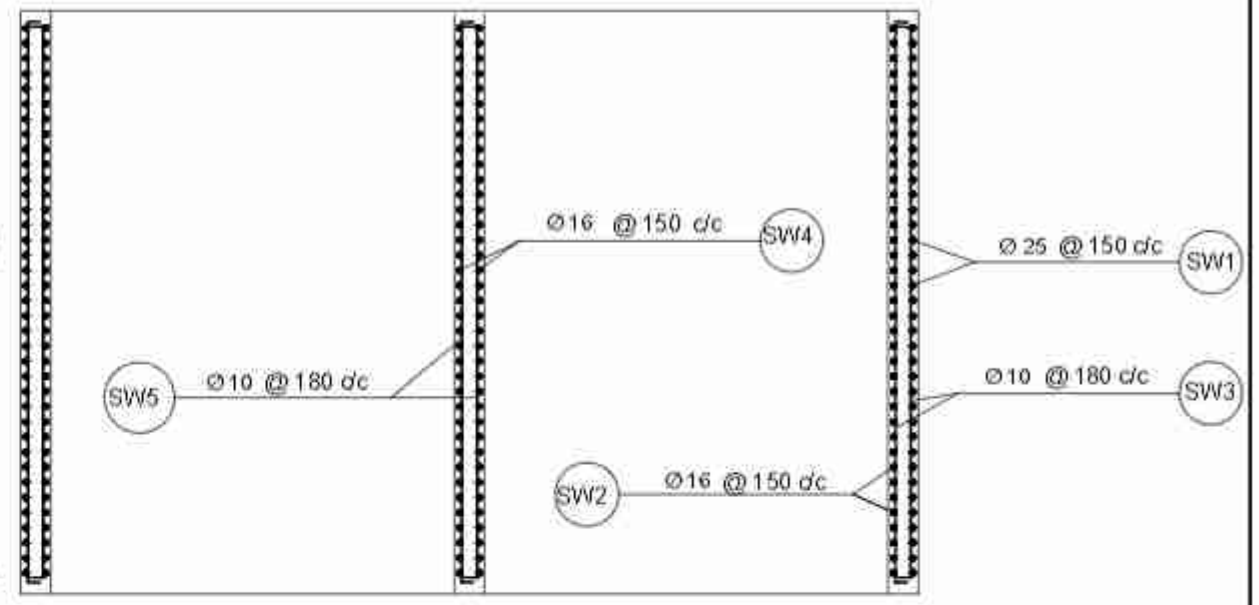

Sectional Plan of Vertical Wall
Scale:-1:75

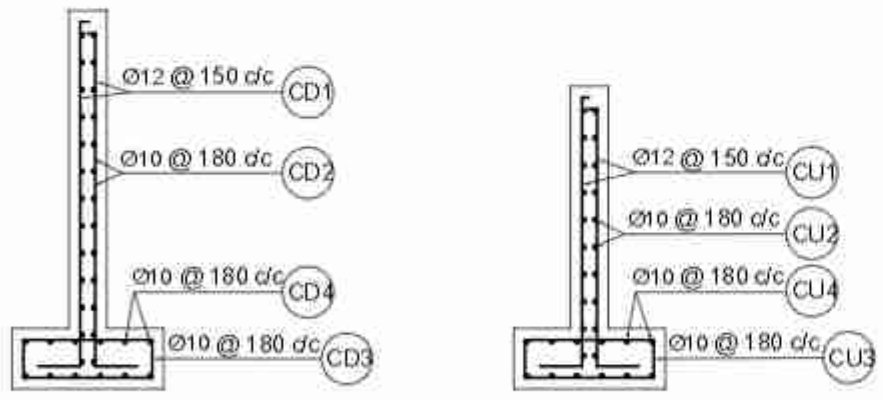

Downstream
Scale:-1:50

Upstream
Scale:-1:50

CURTAIN WALLS
Scale:-1:50

Bottom Sectional Plan
Scale:-1:100

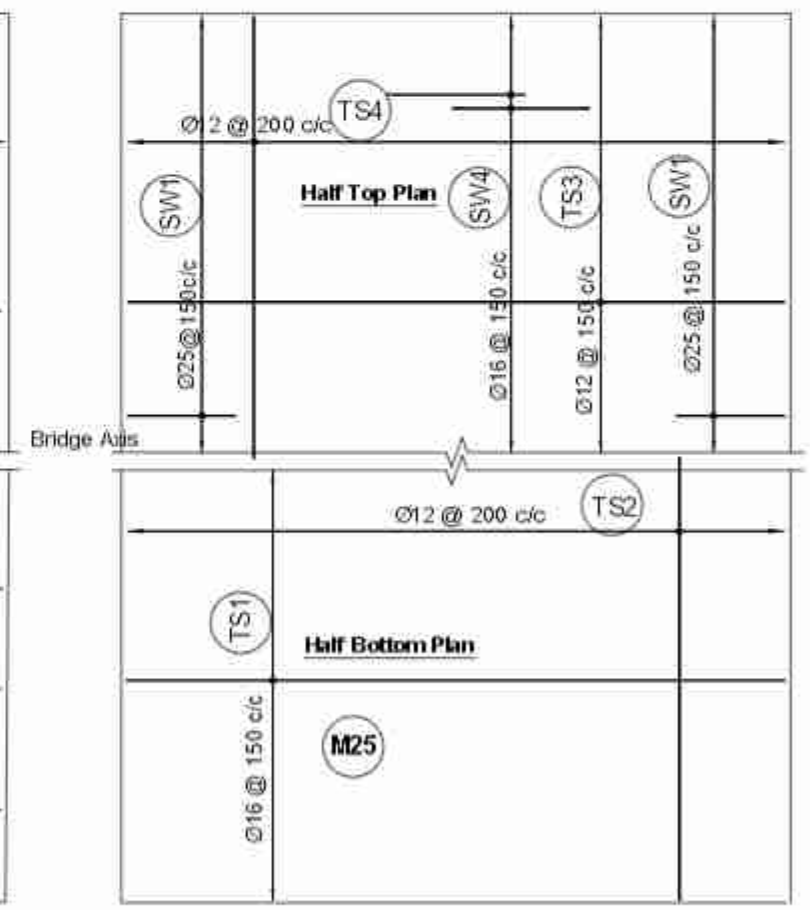

Top Sectional Plan
Scale:-1:100

Government of Nepal Ministry of Physical Infrastructure and Transport **Department of Roads** **Project Directorate Office (ADB)** **SASEC Highway Improvement Project-** **Project Preparatory Consultant (SHIP-PPC)** **ADB Loan No: 3722-NEP**	**CONSULTANT:** Soosung Engineering Co. Ltd, Korea in association with ERMC P (Ltd) and Tech Studio of Engineeering Nepal	**IMPLEMENTING AGENCY:** **DOR, DCID** **ROAD NAME:** **East West Highway (H01)** **Butwal - Gorusinghe Section**	**SHEET TITLE:** Reinforcement Details of **Dry Nala Box Bridge_B - (6X6.3)** (46/H001/305 A,B) CH-611+102	**SCALE:** As Shown		NAME	SIGNATURE	REV NO.	DESCRIPTION	DATE: Nov,2022
					Designed by:	P.Shrestha				DWG.NO.: 305_Dry Nala
					Checked by:	P. Upadhyaya				
					Approved by:	Dr. T.H.Choi				SHEET NO.: 06/11

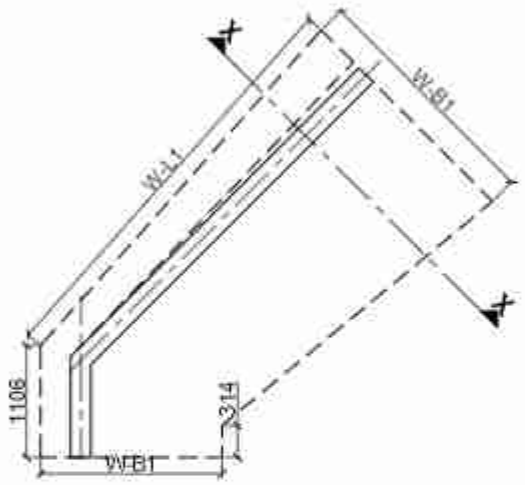

Wing Wall Plan
Scale:-1:75

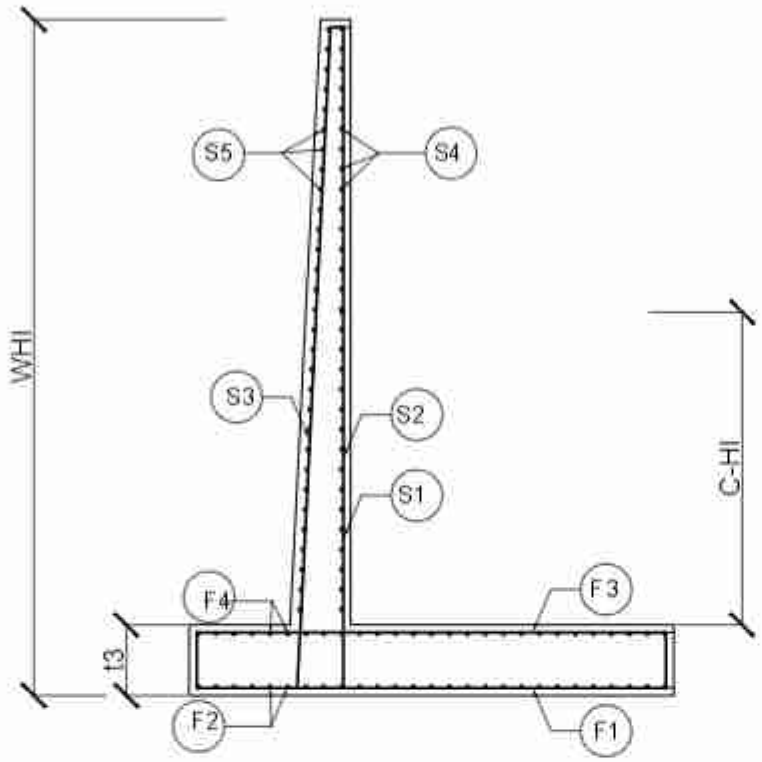

Section at X -X
Scale:-1:75

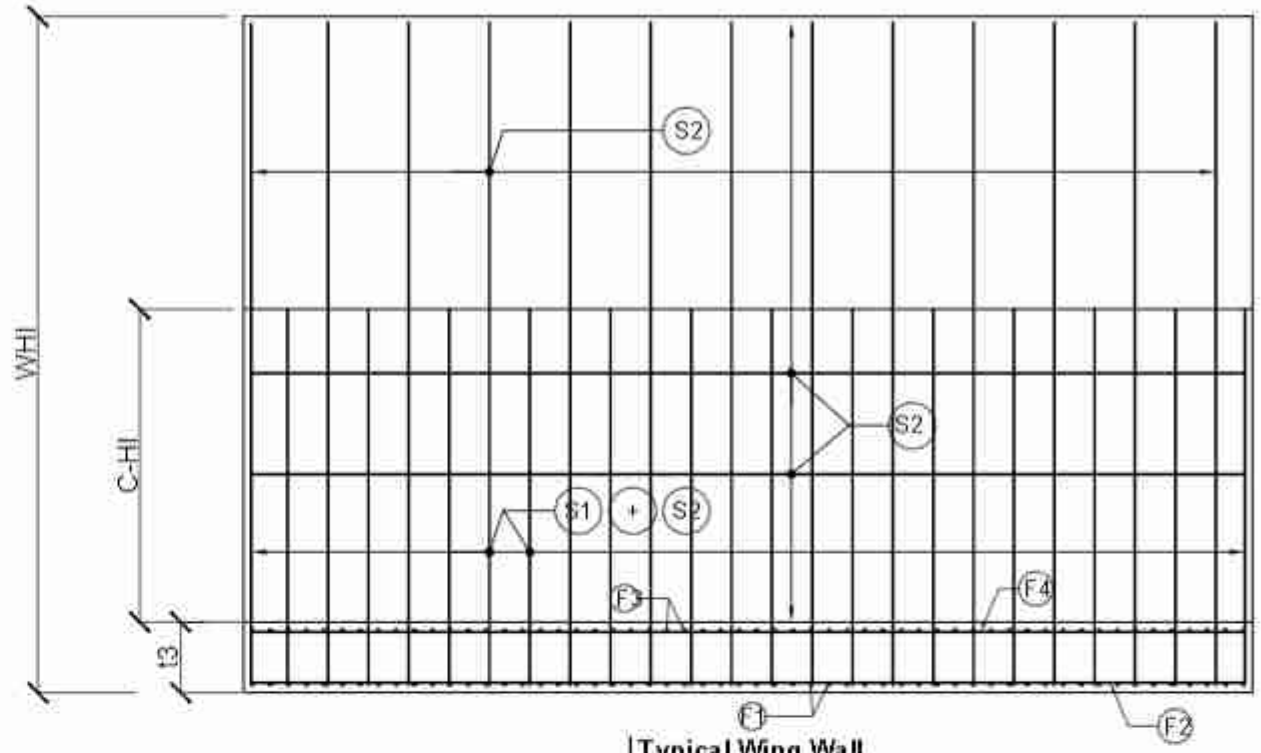

Typical Wing Wall
Scale:-1:75

S.No.	W-H1 (m)	W-L1 Length	W-B1	W-B2	t1	t2	t3	x	y
1.	2.00	4300	1800	1800	200	200	200	300	1300
2.	2.50	4300	2200	1800	200	240	200	300	1660
3.	3.00	4300	2400	1800	200	280	250	450	1670
4.	3.50	500	2800	1800	200	300	250	450	2050
5.	4.00	5700	3200	1800	250	350	300	500	2350
6.	4.50	6000	3500	1800	250	400	350	500	2600
7.	5.00	6500	4000	1800	300	500	500	800	2700
8.	6.00	7000	4800	1800	300	600	700	1000	3200

REINFORCEMENT DETAIL OF WING WALL

HEIGHT W-H1	Curtailment Height C-H1	F1		F2		F3		F4		S1		S2		S3		S4		S5		Remarks
		Diameter	Spacing	Diameter	Spacing	Diameter	Spacing	Diameter	Spacing	Diameter	Spacing	Diameter	Spacing	Diameter	Spacing	Diameter	Spacing	Diameter	Spacing	
m	m	mm	mm	mm	mm	mm	mm	mm	mm	mm	mm	mm	mm	mm	mm	mm	mm	mm	mm	
2.0		8	230	8	230	12	200	8	230	12	100			10	200	8	230	8	230	
2.5		8	230	8	230	12	160	8	230	16	160			10	160	8	230	8	230	
3.0	1.60	10	230	8	230	12	140	8	230	12	180	12	180	10	180	8	230	8	230	
3.5	1.55	10	230	8	230	16	160	10	230	16	200	16	200	12	200	8	230	8	230	
4.0	1.65	10	230	10	300	16	150	10	230	16	200	16	200	12	200	10	230	10	230	
4.5	2.10	10	230	10	300	16	140	10	230	16	200	16	200	12	150	10	230	10	230	
5.0	2.45	12	220	10	250	12	150	10	250	16	180	16	180	12	160	10	230	10	230	
6.0	3.10	12	180	10	180	12	150	10	180	20	200	20	200	12	120	10	160	10	160	

Government of Nepal
Ministry of Physical Infrastructure and Transport
Department of Roads
Project Directorate Office (ADB)
SASEC Highway Improvement Project-
Project Preparatory Consultant (SHIP-PPC)
ADB Loan No: 3722-NEP

CONSULTANT: Soosung Engineering Co. Ltd, Korea in association with ERMC P (Ltd) and Tech Studio of Engineeering Nepal

IMPLEMENTING AGENCY: DOR, DCID

ROAD NAME: East West Highway (H01)

Butwal - Gorusinghe Section

SHEET TITLE: Typical Drawing of Wing Wall of **Dry Nala Box Bridge_B - (6X6.3)** (46/H001/305 A,B) CH-611+102

SCALE: As Shown

	NAME	SIGNATURE	REV NO.	DESCRIPTION
Designed by:	P.Shrestha			
Checked by:	P. Upadhyaya			
Approved by:	Dr. T.H.Choi			

DATE: Nov,2022
DWG.NO.: 305_Dry Nala
SHEET NO.: 07/11

Bar Bending Schedule of Top Slab

Sketch	Spacing (mm)	Bar Mark	Ø, mm	No	Lot	Length, m	Total Length, m	Weight Kg/m	Total wt. Kg
Top Slab									
	150	TS1	16	206	1	13.32	2743.92	1.58	4336.07
	200	TS2	12	134	1	15.37	2059.58	0.89	1830.74
	150	TS3	12	206	1	13.32	2743.92	0.89	2439.04
	200	TS4	12	134	1	15.37	2059.58	0.89	1830.74
	300	TS5	12	104	1	3.50	364.00	0.89	323.56
							Sub-Total (Top Slab) =		10760.1
Base Slab									
	150	BS1	20	224	1	13.25	2968.00	2.47	7328.40
	200	BS2	12	67	1	33.55	2247.85	0.89	1998.09
	150	BS3	16	224	1	13.25	2968.00	1.58	4690.17
	200	BS4	12	67	1	33.75	2261.25	0.89	2010.00
	150	BS5	12	224	1	3.50	784.00	0.89	696.89
									0.0
							Sub-Total (Base Slab) =		16723.5

Bar Bending Schedule of Side Walls

Sketch	spacing (mm)	Bar Mark	Ø, mm	No	Lot	Length, m	Total Length, m	Weight Kg/m	Total wt. Kg
	150	SW1	25	448	1	11.04	4943.68	3.86	19072.84
	150	SW2	16	448	1	7.59	3398.08	1.58	5369.81
	180	SW3	10	76	1	67.30	5114.80	0.62	3157.28
	150	SW4	16	448	1	11.04	4943.68	1.58	7812.24
	180	SW5	10	38	1	67.30	2557.40	0.62	1578.64
	200	SW6	16	336	1	1.83	614.21	1.58	970.60
	200	CB1	12	672	1	1.54	1031.52	0.89	916.91
	200	CB2	12	152	1	3.07	466.64	0.89	414.79
							Sub-Total (Side Walls) =		39293.1

Bar Bending Schedule of Curtain Walls

Sketch	Spacing (mm)	Bar Mark	Ø, mm	No	Lot	Length, m	Total Length, m	Weight Kg/m	Total wt. Kg
Downstream									
	150	CD1	12	348	1	2.65	922.20	0.89	819.73
	180	CD2	10	15	1	51.90	778.50	0.62	480.56
	180	CD3	10	145	1	2.20	319.00	0.62	196.91
	180	CD4	10	12	1	25.85	310.20	0.62	191.48
							Sub-Total (Downstream) =		1688.7
Upstream									
	150	CU1	12	348	1	2.15	748.20	0.89	665.97
	180	CU2	10	12	1	51.90	622.80	0.62	384.44
	180	CU3	10	145	1	2.20	319.00	0.62	196.91
	180	CU4	10	12	1	25.85	310.20	0.62	191.48
							Sub-Total (Upstream) =		1437.9

Bar Bending Schedule of Wing Wall

Sketch	Spacing (mm)	Bar Mark	Ø, mm	No	Lot	Length, m	Total Length, m	Weight Kg/m	Total wt. Kg
	200	S1	20	48	4	3.74	179.52	2.47	443.26
	200	S2	20	48	4	6.09	292.32	2.47	721.78
	120	S3	12	80	4	6.09	487.20	0.89	433.07
	160	S4	10	33	4	9.45	311.85	0.62	192.50
	160	S5	10	33	4	9.45	311.85	0.62	192.50
	180	F1	12	54	4	3.39	183.06	0.89	162.72
	180	F2	10	19	4	9.45	179.55	0.62	110.83
	150	F3	12	64	4	3.39	216.96	0.89	192.85
	180	F4	10	19	4	9.45	179.55	0.62	110.83
		F5	10	6	4	9.45	56.70	0.62	35.00
							Sub-Total (Base Slab) =		2560.3

Bar Bending Schedule of Approach Slab

Sketch	Spacing (mm)	Bar Mark	Ø, mm	No	Lot	Length, m	Total Length, m	Weight Kg/m	Total wt. Kg
	150	AS1	12	224	2	3.60	1612.80	0.89	1433.90
	150	AS2	12	24	2	33.60	1635.20	0.89	1453.51
	150	AS3	12	224	2	3.60	1612.80	0.89	1433.90
	150	AS4	12	24	2	33.60	1635.20	0.89	1453.51
							Sub-Total (Approach Slab) =		5774.2

Bar Bending Schedule of Safety Barrier Type - 1

Sketch	Spacing (mm)	Bar Mark	Ø, mm	No	Lot	Length, m	Total Length, m	Weight Kg/m	Total wt. Kg
	125	C1	16	81	1	2.03	164.59	1.58	260.10
	125	C2	16	81	1	1.42	114.62	1.58	181.12
		C3	16	11	1	9.96	109.56	1.58	173.13
							Sub-Total of 10m Safety Barrier Type - 1 =		614.3
							For 66.8m length		4103.5

Bar Bending Schedule of Safety Barrier Type - 2

Sketch	Spacing (mm)	Bar Mark	Ø, mm	No	Lot	Length, m	Total Length, m	Weight Kg/m	Total wt. Kg
	150	C1	16	8	1	2.21	17.64	1.58	27.88
	150	C2	16	16	1	1.65	26.32	1.58	41.59
		C3	16	12	1	0.96	11.52	1.58	18.20
							Sub-Total of 1m Safety Barrier Type - 2 =		87.7
							For 26.4m Length		2316.3

Government of Nepal Ministry of Physical Infrastructure and Transport **Department of Roads** **Project Directorate Office (ADB)** **SASEC Highway Improvement Project-** **Project Preparatory Consultant (SHIP-PPC)** **ADB Loan No: 3722-NEP**	**CONSULTANT:** Soosung Engineering Co. Ltd, Korea in association with ERMC P. (Ltd) and Tech Studio of Engineeering Nepal	**IMPLEMENTING AGENCY:** **DOR, DCID** **ROAD NAME:** **East West Highway (H01)** **Butwal - Gorusinghe Section**	**SHEET TITLE:** Bar Bending Schedule of **Dry Nala Box Bridge_B - (6X6.3)** (46/H001/305 A,B) CH-611+102	**SCALE:** As Shown		NAME	SIGNATURE	REV NO.	DESCRIPTION	DATE: Nov,2022
					Designed by:	P.Shrestha				DWG.NO.: 305_Dry Nala
					Checked by:	P. Upadhyaya				
					Approved by:	Dr. T.H.Choi				SHEET NO.: 08/11

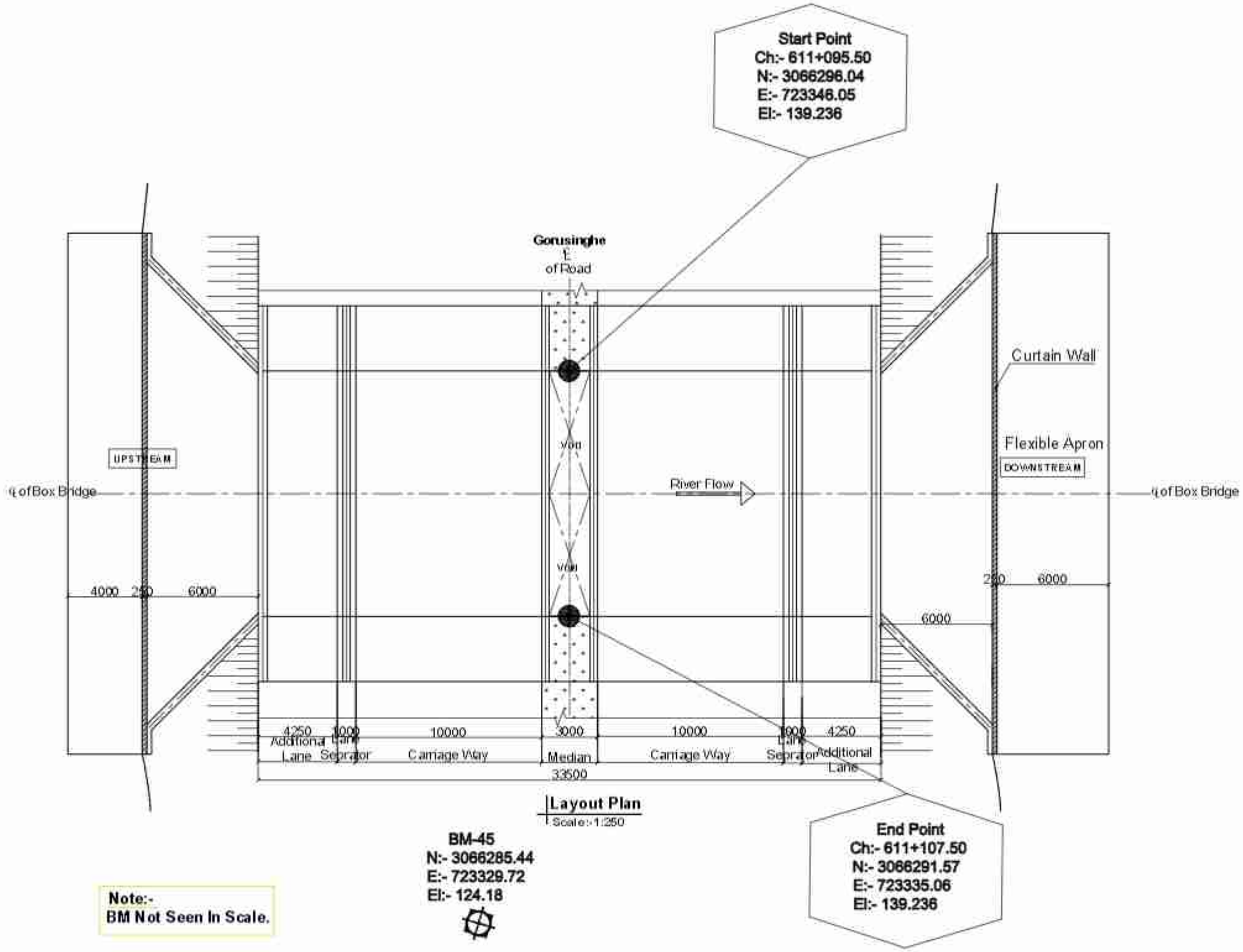

Note:-
BM Not Seen In Scale.

Government of Nepal Ministry of Physical Infrastructure and Transport **Department of Roads** **Project Directorate Office (ADB)** **SASEC Highway Improvement Project-** **Project Preparatory Consultant (SHIP-PPC)** **ADB Loan No: 3722-NEP**	**CONSULTANT:** Soosung Engineering Co. Ltd, Korea in association with ERMC P (Ltd) and Tech Studio of Engineering Nepal	**IMPLEMENTING AGENCY:** **DOR, DCID** **ROAD NAME:** **East West Highway (H01)** **Butwal - Gorusinghe Section**	**SHEET TITLE:** Layout Plan of **Dry Nala Box Bridge_B - (8X6.3)** (46/H001/305 A,B) CH-611+102	**SCALE:** As Shown		NAME	SIGNATURE	REV.NO.	DESCRIPTION	DATE: Nov,2022
					Designed by:	P.Shrestha				DWG.NO.: 305_Dry Nala
					Checked by:	P. Upadhyaya				
					Approved by:	Dr. T.H.Choi				SHEET NO.: 06/11

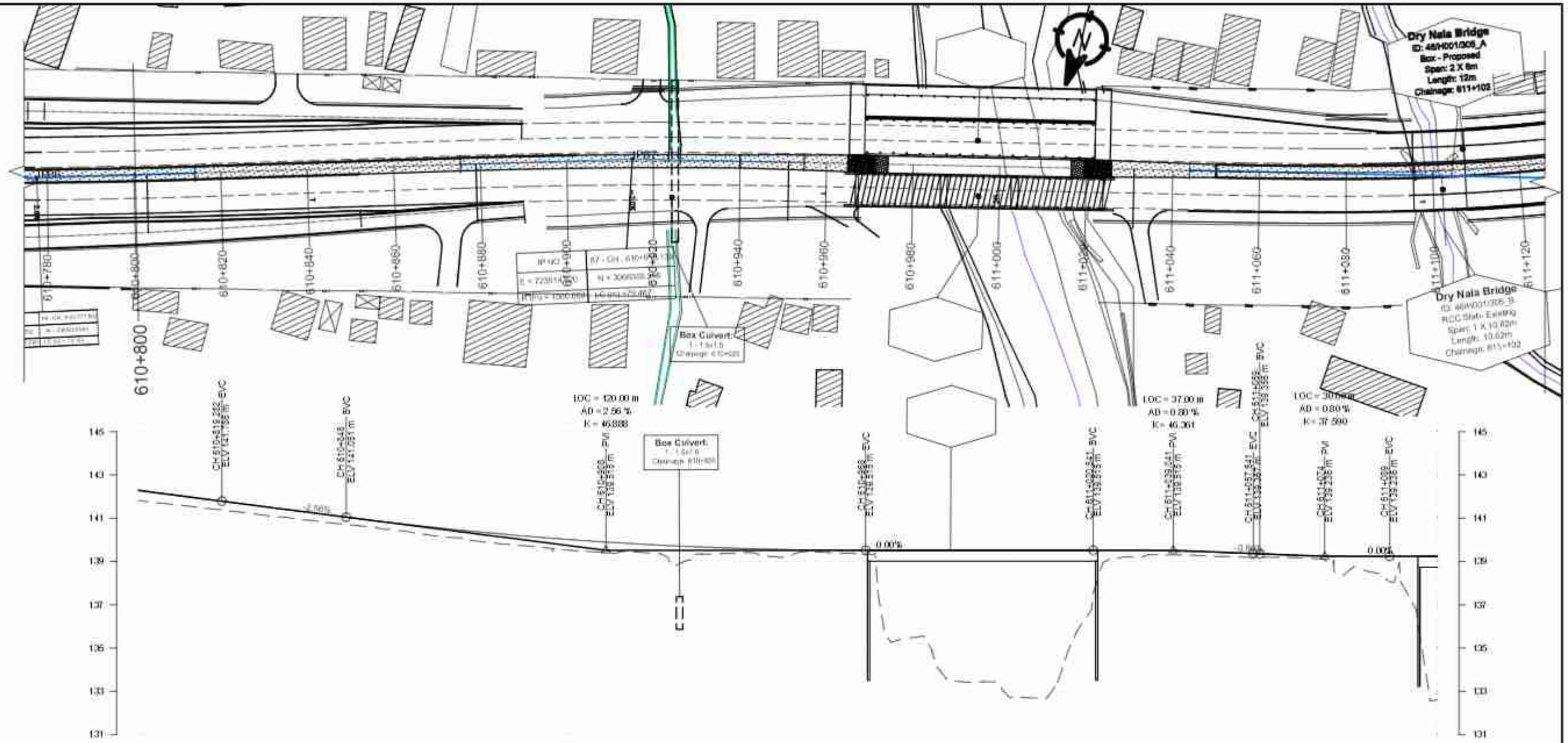
Dry Nala Bridge
ID: 46/H001/305_A
Box - Proposed
Span: 2 X 6m
Length: 12m
Chainage: 611+102
Dry Nala Bridge
ID: 46/H001/305_B
RCC Slab- Existing
Span: 1 X 10.82m
Length: 10.82m
Chainage: 611+102
Box Culvert
Box Culvert
610+800
LOC = 120.00 m
AD = 2.56 %
K = 46.888
LOC = 37.00 m
AD = 0.80 %
K= 46.361
LOC = 30.00 m
AD = 0.80 %
K= 37.590
2.56%
0.00%
0.00%

| | | |

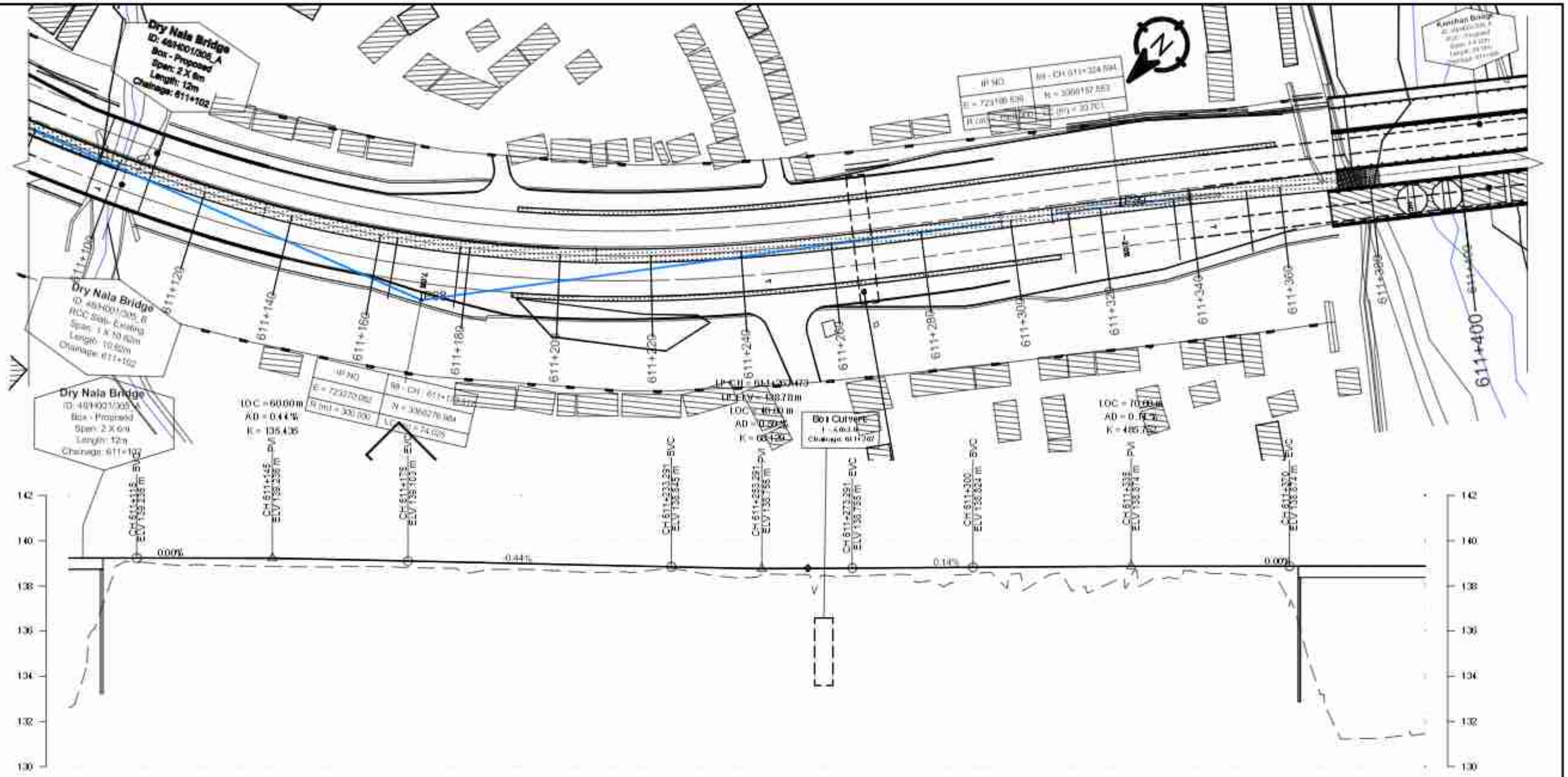
Dry Nala Bridge
ID: 48/H001/305_A
Box - Proposed
Span: 2 X 6m
Length: 12m
Chainage: 611+102
Dry Nala Bridge
ID: 48/H001/305_B
RCC Slab- Existing
Span: 1 X 10.62m
Length: 10.62m
Chainage: 611+102
Dry Nala Bridge
ID: 48/H001/305_A
Box - Proposed
Span: 2 X 6m
Length: 12m
Chainage: 611+102
Box Culvert
611+400
0.44%
0.14%
0.00%

| | | |

Government of Nepal

Ministry of Physical Infrastructure and Transport

Department of Roads

Project Directorate (ADB)

Implementing Agency : DOR, DCID

Project Preparatory Consultants

Under

SASEC Highway Improvement Project (SHIP-PPC)

(ADB Loan No: 3722 Nep)

Contract No. SHIP/PPC/2020/02

Kanchan Bridge (46-H001-306_A)

St. Ch : 611+371.93 ~ End Ch : 611+440.07

Detailed Drawing

Butwal - Gorusinghe Sector

November,2022

CONTENTS

S.No.	DESCRIPTION	DWG. NO	NO. OF SHEETS
1.	General Notes.	1 - 2	2
2.	Topographic Map.	3	1
3.	General Arrangement.	4-5	2
4.	Bore Logs.	6	1
5.	Detail of Superstructure.	7	1
6.	Reinforcement Details of Slab.	8	1
7.	Reinforcement Details of Main Girder .	9	1
8.	Anchorage Details.	10	1
9.	Bar Bending Schedule of Slab & Main Girder.	11	1
10.	Abutment Details.	12	1
11.	Reinforcement Details of Abutment.	13	1
12.	Reinforcement Details of Wingwall.	14	1
13.	Reinforcement Details of Abutment Piles.	15	1
14.	Plan of Pier.	16	1
15.	Reinforcement Details of Pier Cap.	17	1
16.	Barbending Schedule of Pier Cap.	18	1
17.	Reinforcement Details of Abutment Pile.	19	1
18.	Reinforcement Detail of Approach Slab.	20	1
19.	Miscellaneous Detail.	21-22	2
20.	River Training Work.	23	1
21.	Plan & Profile.	24-25	2
22.	Layout Plan.	25.1-25.3	3
23.	Layout Plan.	26-27	2

GENERAL NOTES

General

- Metric system of measurement is used in all drawings. Elevation and Stations are shown in Meter and all other dimensions are in Millimeters, except indicated otherwise.
- In case of contradictions, specific notes on respective sheet shall supersede the General Notes
- No dimensions shall be scaled from the drawings. Only written dimensions shall be followed. Any doubtful matter in the drawings shall be brought to the attention of the engineer-in-charge for any corrections before the execution of the works.

Design Notes

The design codes followed:
For RCC and PSC concrete - IRC:112-2020
For loads and stresses - IRC:6-2017
For substructure and foundations - IRC:78-2014
For seismic design - IRC:SP:114-2018. Seismic zone V. Importance factor 1.2

Design live loads:

For urban area bridges
Case 1 - 3 lanes of class A + pedestrians; 1 lane of class A + 1 lane of class 70R + pedestrians
Case 2 - 4 lanes or class A; 2 lanes of class A + 1 lane of class 70R. No pedestrians
For non-urban area bridges
Case 1 - 2 lanes of class A + pedestrians; 1 lane of class 70R + pedestrians
Case 2 - 3 lanes of class A; 1 lane of class A + 1 lane of class 70R. No pedestrians.

Notes on Concrete

In General the grade of concrete to be used shall be as follows:
(**unless otherwise specified in the respective drawing sheets**)

For superstructure deck slab, wearing course, crash barriers:	M30
For raised footpaths:	M25
For main girders and cross girders of superstructure with PSC girders:	M45
For main girders and cross girders of superstructure with RCC girders:	M30
For substructure: Abutment stem, ballast wall, stoppers, bearing pedestals, pier cap, pier stem and pile caps:	M30
For bored and cast in situ piles:	M35
For leveling course:	M15

The maximum size of aggregate shall be as per IRC:112-2020, clause 18.4.4.2

Admixture to the concrete

To improve workability and/or increase initial setting time of concrete and cement grout, admixture conforming to IS:9103 and ASTM C-494, (Type F - High Range Water Reducing admixture) can be added in appropriate dosage, subject to their satisfactory proven use.

Clear Cover to reinforcement (unless otherwise specified in the respective drawing sheets)

Reinforcement bars of all components of the superstructure:	40mm
Prestressing ducts or strands in superstructure:	75mm
All components of abutment, pier, pile caps and piles (except stoppers and bearing pedestals):	75mm
Bearing pedestals and Stoppers:	50mm

Cover shall be ensured with the use of properly sized cement concrete blocks which can be secured to the re-bars or other devices approved by the engineer-in-charge. Use of loose stones or wooden pieces is not permitted.

Notes on Reinforcement

- All reinforcing steel bars shall be High Strength Deformed bars with grade Fe500 conforming to IS:1786
- Laps and Splices shall conform to IRC:112-2020, Clause 15.2.5. Use of mechanical coupler is permitted upon approval by the engineer.

Notes on Prestressing

- Prestressing strands shall be Class-2, uncoated 7 ply, low relaxation type with ultimate tensile stress 1862 N/mm², conforming to IS:14268.
- The diameter of strands, their number in a tendon and the total jacking force to be applied is specified in the respective drawing sheet. All the initial and long term losses are already incorporated in design.
- Corrugated HDPE Sheathing ducts shall be used with the minimum internal diameter not less than three times the cross sectional area of the tendon. The wall thickness and other properties of the sheathing shall be as per IRC:112-2020, clause 13.4.3
- The specified profile and the alignment of the ducts shall be strictly maintained by properly securing the ducts to the re-bars. If required, pieces of re-bars can be added or the re-bars slightly repositioned or bent to maintain the profile and alignment, with approval of the engineer-in-charge.
- The jacking equipment shall be fitted with appropriate force measuring device and shall be regularly checked and calibrated as prescribed by the manufacturer.
- Jacking shall be done from both ends simultaneously and gradually, recording the elongation both sides. The expected final elongation mentioned in the respective drawings sheet is based on modulus of elasticity of the strands (Es) equal to 1.95x10^5 MPa. If the Es of supplied strands is different then the elongation values shall be recalculated by multiplying the Design values of elongation by the ratio of Design Es / Actual Es.
- In case the total elongation is not achieved at the prescribed jacking force, the jacking operation can be continued until the force reaches the maximum allowable value. If the required elongation is achieved at jacking force lower than the prescribed value, the jacking operation shall continue until the prescribed force is reached, provided the Sum of the additional elongations thus achieved is not more than 5% of the sum of the prescribed elongations.
- In adverse condition to any of the cases above, the jacking operation shall be stopped, the tendons removed and this matter reported to the engineer-in-charge for further instruction. The jacking force should NEVER exceed the Maximum allowable value.

Grouting

- The tendons which satisfy the above conditions shall be grouted properly, ensuring the duct is free of any foreign material and there is no leak or damage around the joints between the anchors and the ducts. Grouting can be normally done immediately after successful completion of tensioning operations and shall not be delayed by more than 5 days of tensioning of the cables.
- The grout shall be prepared with Ordinary Portland cement with suitable expansive admixture approved by the engineer. Admixture containing chloride and nitrate are not permitted. The water/cement ratio shall not be more than 0.48. Retempering of the grout shall not be permitted. The grout shall be mixed with mechanical mixers and shall be continuously kept agitated until pumped in.

Stages and sequence of Prestressing

- The Precast composite girders shall be prestressed in two stages. The specified number of the tendons shall be tensioned in the prescribed sequence shown in the respective drawing sheet.
- The remaining tendons shall be tensioned after specified days after casting of the deck slab, in the sequence shown in the respective drawing sheet.
- The prestressing of the precast girder shall be started only after confirming that the cube specimen has achieved 100% of the prescribed compressive strength. No early prestressing allowed.

Construction methodology and sequence for Precast Prestressed Composite superstructure

- The main girders are be precast near the bridge site at suitable location (approach road or dry river bed, if available) on well prepared casting yard. The choice of location also depends upon the equipment available for lifting or launching the girders. After completion of the prestressing works the girders are either lifted by suitable cranes or pushed/launched with the help of rails and jacks or launching girders and placed carefully over the already completed substructure. Care shall be taken that all the preparatory works for the bearings are done properly before the launching/placing of the girders.
- Lifting shall be done only by the hooks provided at both ends. In case of jacking the jacking points shall be only just under the location of the hooks. No support, lifting or jacking is allowed at any other section of the girder
- After placing all the main girders and finishing the works on the bearings, the formwork for deck slab and cross girders are prepared. All the formwork for deck slab and cross girders shall be supported by the main girders. The main girders shall remain un-propped during casting of the deck slab. Similarly there shall be no false-work or props from the ground or part of substructure during casting of the deck slab.
- The Contractor shall ensure stability of the girders during all stages of construction.
- Dimensional tolerances for the precast girders shall be as per IRC:SP:71-2018, Clause 4.10. If not prescribed otherwise, transportation and handling operation shall follow the guidelines in Clause 4.9 of the same documents.
- The prescribed time-line for construction of the superstructure is as follows

Prestressing of Precast Girder only (Stage 1)	After 28 days of casting or confirming 100% compressive strength of concrete
Lifting/Launching of the Girder	Within 14 days of first stage prestressing
Casting of the Deck Slab	Within 14 days of placing of girder over substructure
Prestressing of Girder (Stage 2)	After 14 days of casting of deck slab
Casting of Footpath, Crash Barrier, Wearing Course etc	Preferably within 7 days but not later than 14 days of Second stage prestressing

Deviation from the above time-line is subject to approval by the engineer. No other vehicle except the concreting apparatus are allowed on the deck until the deck slab has attained its full specified strength.

Construction methodology for Cast-in-situ RCC superstructure

- Construction of Monolithic cast in situ RCC superstructure shall follow the standard practices. The falsework for the girders and deck slab are supported on the ground and removed after specified time period.

Notes on Bearings

- The contractor shall supply, provide and install the bearings designed according to the loadings and other relevant information provided in the drawings or BOQ.
- The dimension and number of layers of the Elastomeric bearings shown in the drawings are tentative. The bearings shall be designed, fabricated, tested and installed as per IRC:83 - 2018, Part-2 for elastomeric bearing and Part-3 for Pot-PTFE bearings, as the case applies.

Notes on Foundation and Substructure

- Standard Specifications and Special provisions to the Standard Specifications (if any) and specific notes on the drawings shall be followed for the construction of the abutments, piers and foundations.
- Backfill behind the abutment shall be places only after the concrete has achieved full 28 days strength. Heavy compaction equipment weighing more than 10 Ton shall not be used within 2.0 meters from the back of the abutment until all the works on superstructure is completed.
- The graded backfill behind the abutment shall be at a slope not steeper than 62 degrees, starting from the back of the footing. The back fill material dry density shall be within 1900 to 2200 kN/m^3 and moisture content between 9 to 15%
- In case of new bridge adjacent to the existing bridge, care shall be taken not to render any damage to the elements of the existing bridge. Particular attention shall be paid to the foundation of the existing bridge. The contractor shall ensure that excavation for the foundation of the new bridge does not cause instability or settlement of the foundation of the existing bridge.
- If the existing bridge has a shallow foundation, the contractor shall protect the existing foundation by sheet piling or any other suitable means to the satisfaction of the engineer, before excavating for the foundation of the new bridge.

General Note: (For all Pile Foundation)

- Drilling/Boring works for pile is allowed only with rotary or oscillator type drilling equipment.No percussion method is allowed .Stability of borehole shall be ensured by the use of temporary casing.Use of other methods of borehole stability is subject to approval by the engineer, but in such case use of water/air/chemical jetting for boring process shall not be allowed.
- In case of drilling/boring without temporary casing,the contractor should ensure the stability and uniformity of the borehole before lowering the reinforcement cage and during concreting.
- Boring/Drilling of the piles is preferred in a staggered pattern.Boring/Drilling for any pile shall not commence before 24 hours of completion of concreting of any pile within a radius of 6 meters from its center.
- In case of drilling/boring without temporary casing , the pile shall be lined with 6mm thick permanent casing from the bottom of the pile cap down to 0.5 m below the maximum scour depth or 1.5 m whichever is larger.

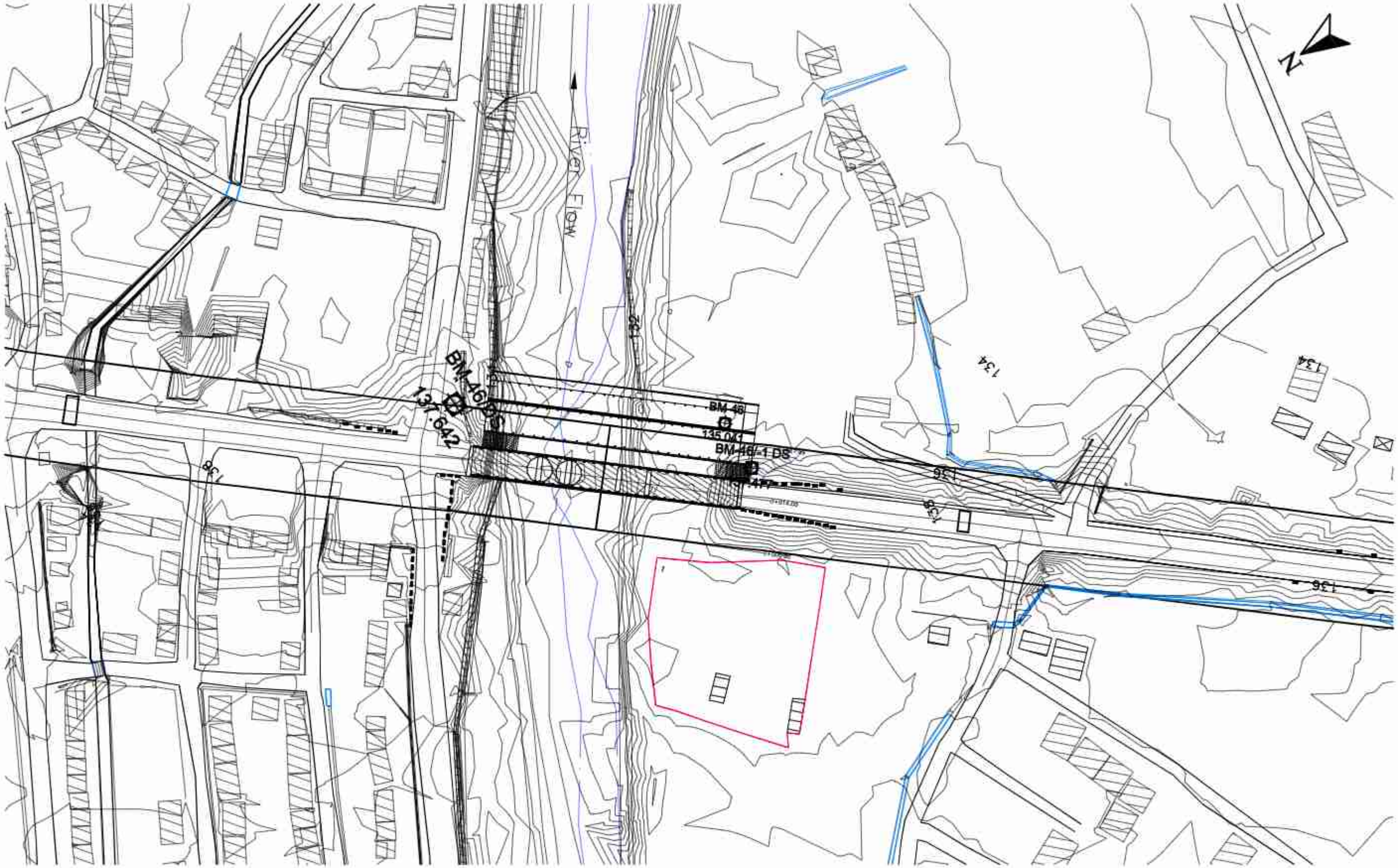

Government of Nepal Ministry of Physical Infrastructure and Transport **Department of Roads** **Project Directorate Office (ADB)** **SASEC Highway Improvement Project-** **Project Preparatory Consultant (SHIP-PPC)** **ADB Loan No: 3722-NEP**	**CONSULTANT:** Soosung Engineering Co. Ltd, Korea in association with ERMC P. (Ltd) and Tech Studio of Engineeering Nepal	**IMPLEMENTING AGENCY:** **DOR, DCID**	**SHEET TITLE:**	**SCALE:**		**NAME**	**SIGNATURE**	**REV NO.**	**DESCRIPTION**	**DATE:**
		ROAD NAME:	Topographic Map of **Kanchan Bridge** (46/H001/306_A)	1:1	Designed by:	Saroj Bhattarai				November , 2022
		East West Highway (H01)			Checked by:	P. Upadhyaya				**DWG.NO.:** 306_Kanchan
		Butwal - Gorusinghe Section			Approved by:	Dr. T.H.Choi				**SHEET NO.:** 03/27

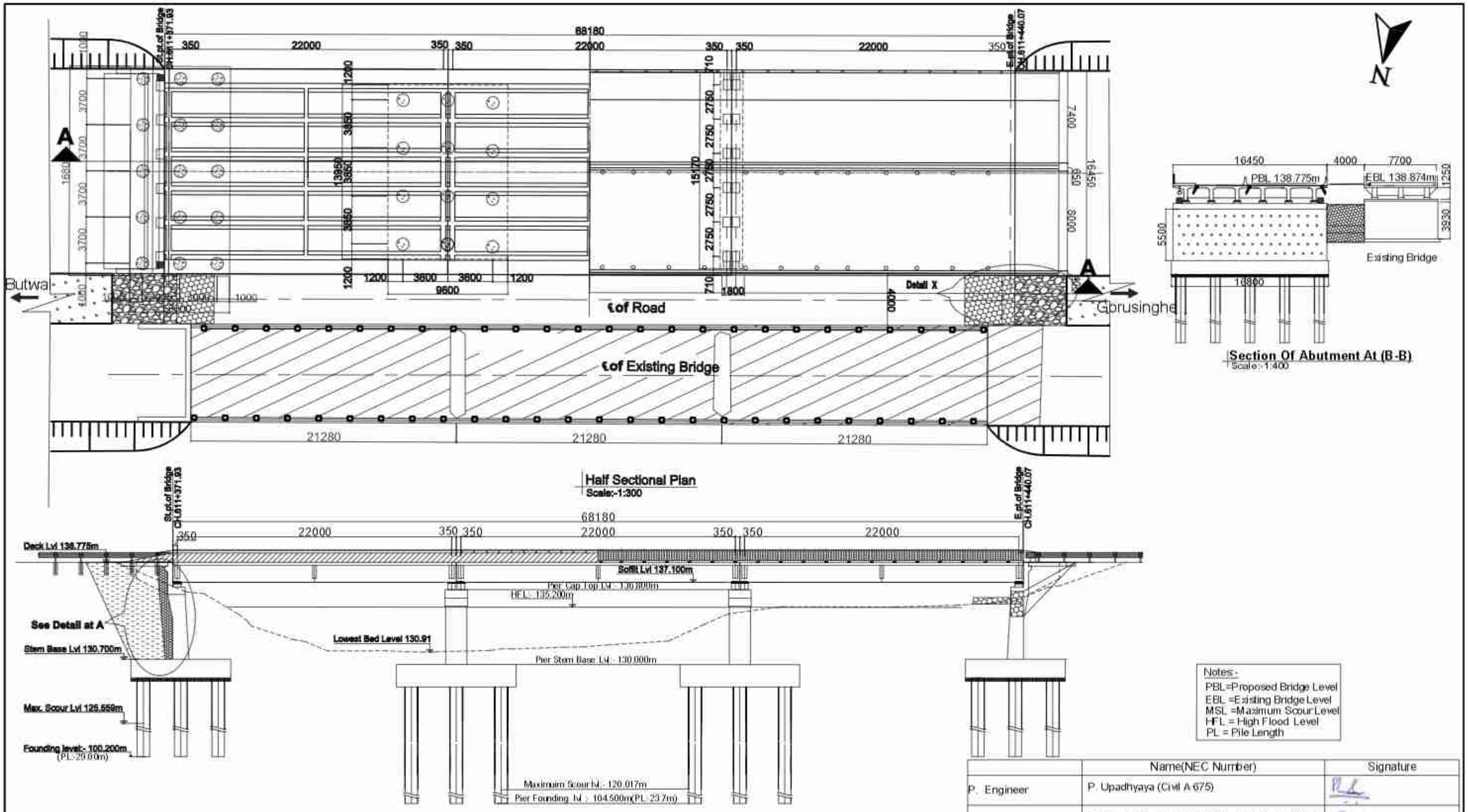

Half Sectional Plan
Scale:-1:300

Section Of Abutment At (B-B)
Scale:-1:400

Half Sectional Elevation
Scale:-1:300

Notes:-
PBL=Proposed Bridge Level
EBL =Existing Bridge Level
MSL =Maximum Scour Level
HFL = High Flood Level
PL = Pile Length

	Name(NEC Number)	Signature
P. Engineer	P. Upadhyaya (Civil A 675)	
Structure Engineer	K.P.Wagle(Civil A 127) / P.Shrestha(Civil A 676) / S.Bhattarai (Civil A 904)	
Hydrologist	Dr. P.C. Jha(Civil A 166) / S. Adhikari (Civil A 408)	
Geotechnical Engineer	A. Adhikari(ka 199) / Dr. V. R. S. Shahi	

Government of Nepal
Ministry of Physical Infrastructure and Transport
Department of Roads
Project Directorate Office (ADB)
SASEC Highway Improvement Project-
Project Preparatory Consultant (SHIP-PPC)
ADB Loan No: 3722-NEP

CONSULTANT:
Soosung Engineering Co. Ltd, Korea
in association with
ERMC P (Ltd)
and
Tech Studio of Engineeering Nepal

IMPLEMENTING AGENCY:
DOR, DCID

ROAD NAME:
East West Highway (H01)

Butwal - Gorusinghe Section

SHEET TITLE:
General Arrangement of
Kanchan Bridge
(46/H001/306_A)

SCALE:
1:300

	NAME	SIGNATURE	REV NO.	DESCRIPTION
Designed by:	Saroj Bhattarai			
Checked by:	P. Upadhyaya			
Approved by:	Dr. T.H.Choi			

DATE: November,2022
DWG.NO.: 306_Kanchan
SHEET NO.: 04/27

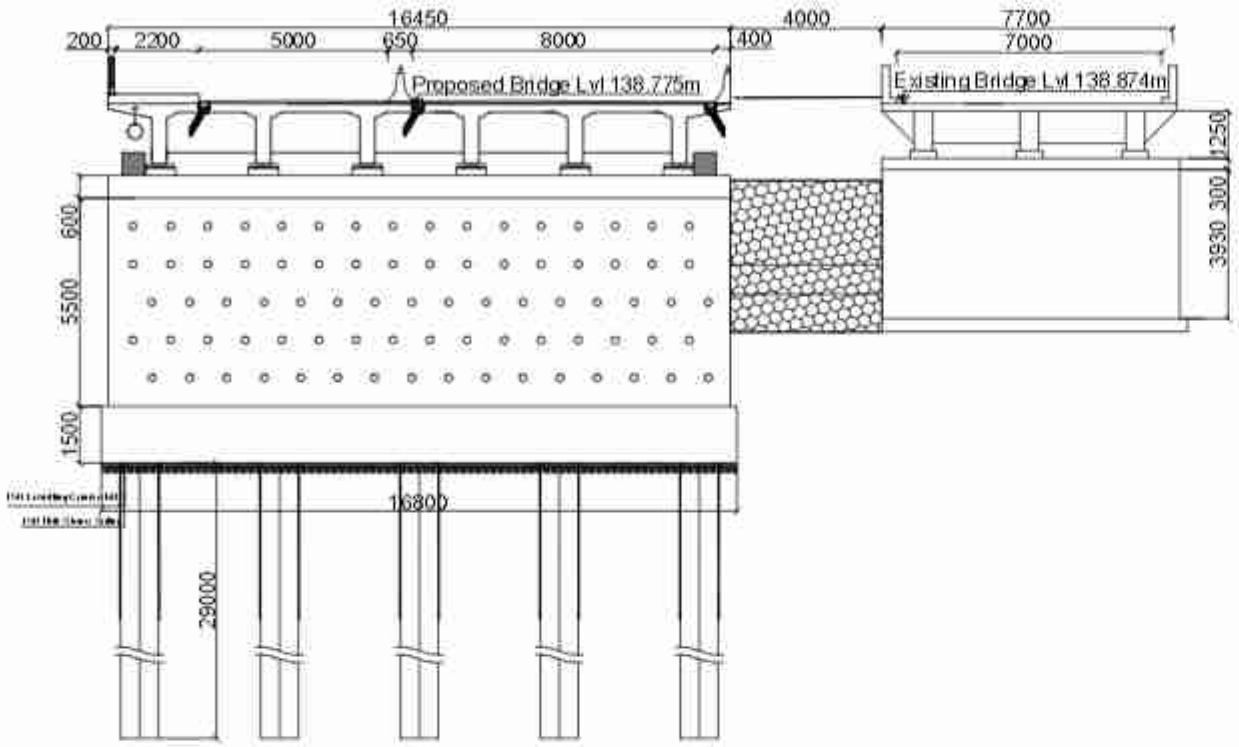

Section Of Abutment At (B-B)
Scale:-1:200

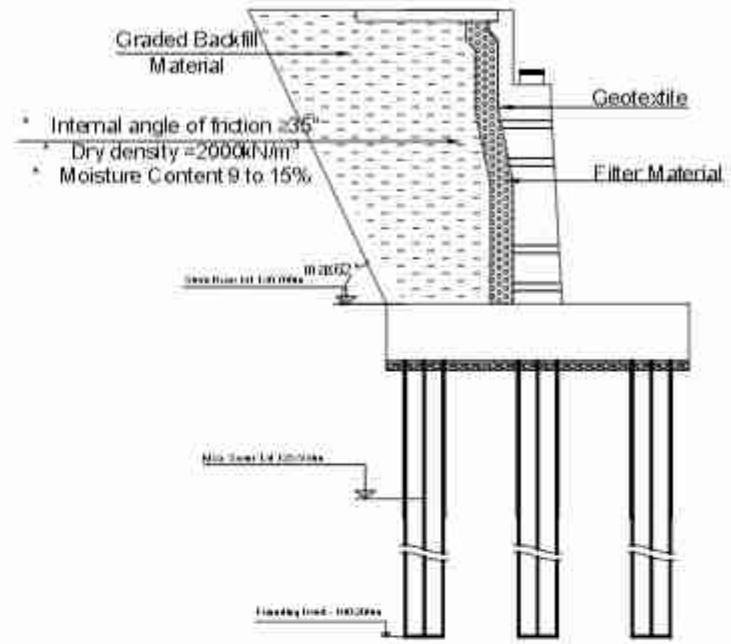

Detail of A
Scale:-1:200

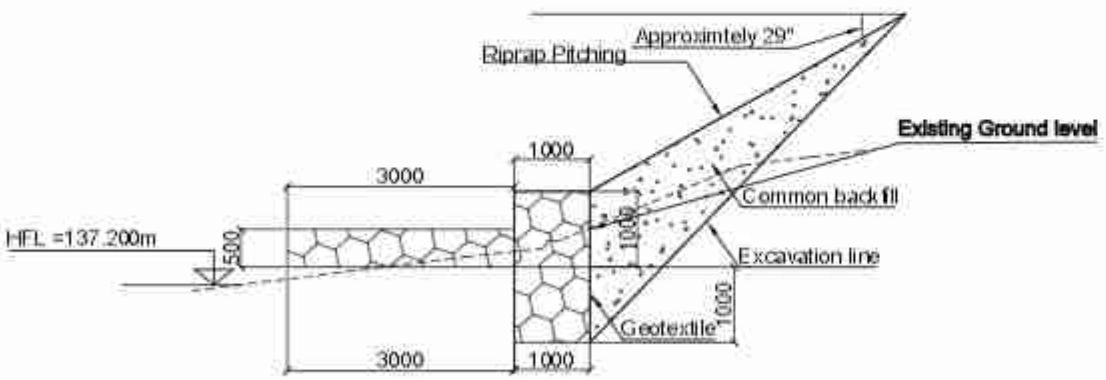

Section at X-X
Scale:-1:100

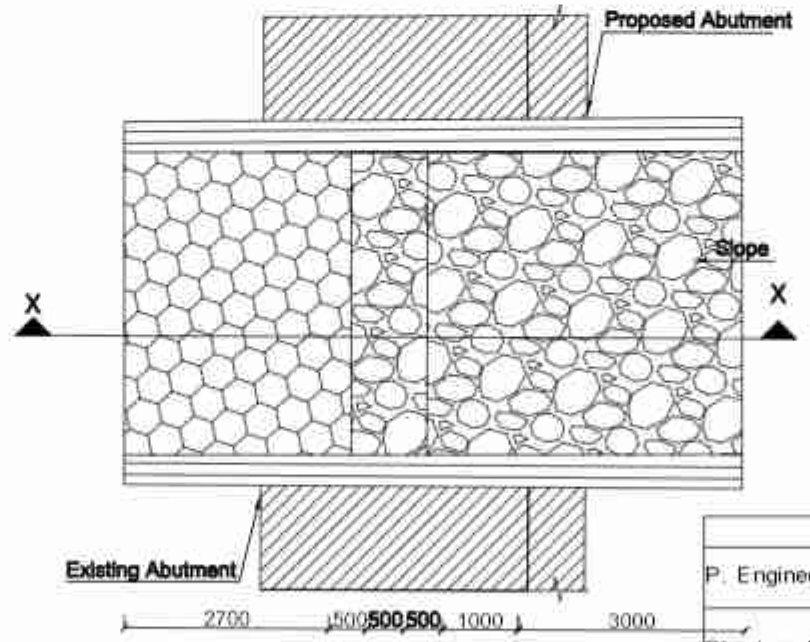

Detail Plan of X
(Transition Between Approach Embankments)
Scale:-1:100

	Name(NEC Number)	Signature
P. Engineer	P. Upadhyaya (Civil A 675)	
Structure Engineer	K.P.Wagle(Civil A 127) / P.Shrestha(Civil A 676) / S.Bhattarai (Civil A 904)	
Hydrologist	Dr. P.C. Jha(Civil A 166) / S. Adhikari (Civil A 408)	
Geotechnical Engineer	A. Adhikari(ka 199) / Dr. V. R. S. Shahi	

Government of Nepal Ministry of Physical Infrastructure and Transport **Department of Roads** **Project Directorate Office (ADB)** **SASEC Highway Improvement Project-** **Project Preparatory Consultant (SHP-PPC)** **ADB Loan No: 3722-NEP**	**CONSULTANT:** Soosung Engineering Co. Ltd, Korea in association with ERMC P (Ltd) and Tech Studio of Engineeering Nepal	**IMPLEMENTING AGENCY:** **DOR, DCID** **ROAD NAME:** **East West Highway (H01)** **Butwal - Gorusinghe Section**	**SHEET TITLE:** General Arrangement of **Kanchan Bridge** (46/H001/306_A)	**SCALE:** 1:300		**NAME**	**SIGNATURE**	**REV NO.**	**DESCRIPTION**	**DATE:** November,2022
					Designed by:	Saroj Bhattarai				**DWG.NO.:** 306_Kanchan
					Checked by:	P. Upadhyaya				
					Approved by:	Dr. T.H.Choi				**SHEET NO.:** 05/27

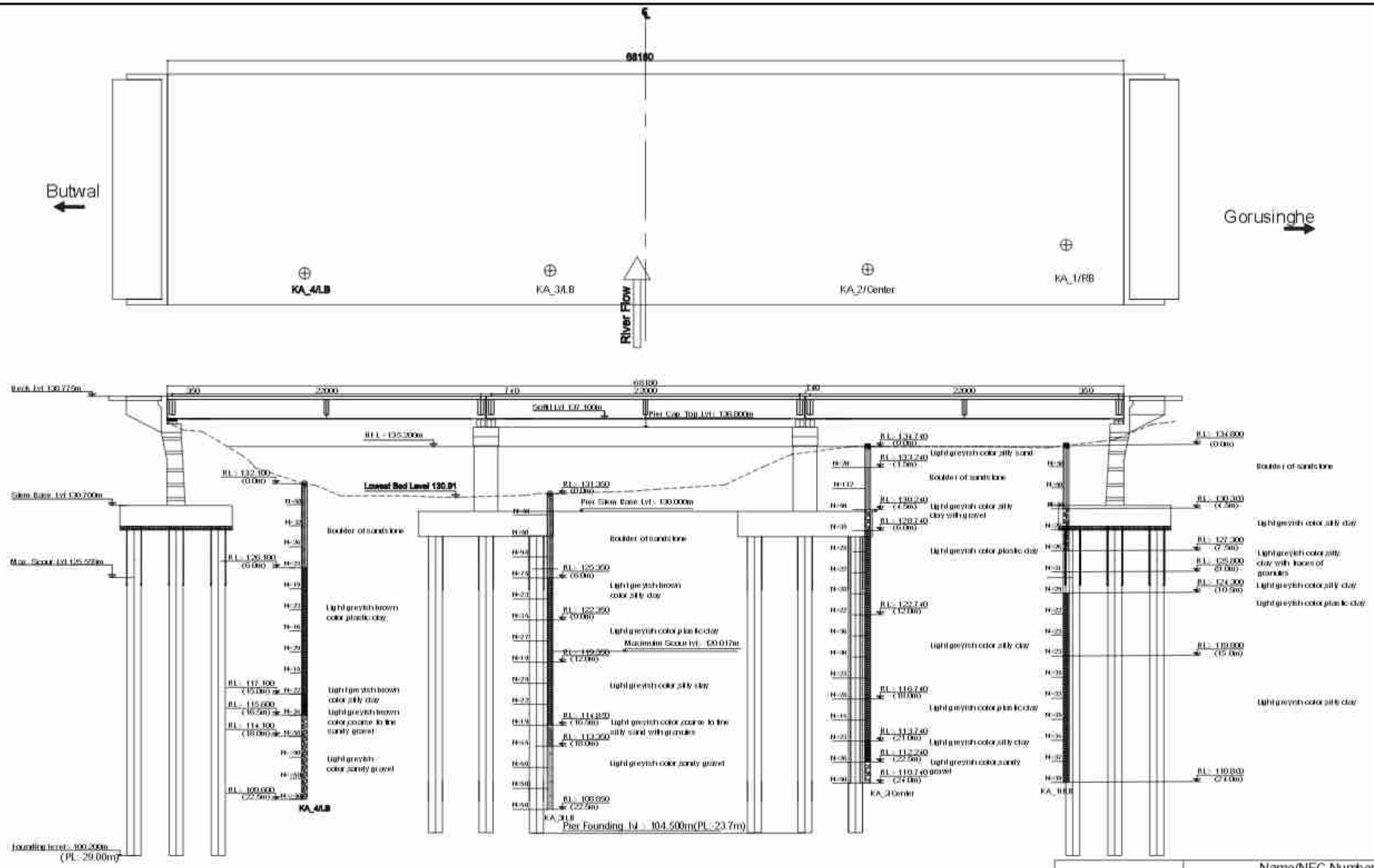

Bore Log Detail
Scale:-1:250

Borehole No : KA_1/RB
Easting : 83° 15' 45.20" Northing : 27° 42' 1.82" Elevation, m : 134.800
Borehole No : KA_2/Center
Easting : 83° 15' 45.91" Northing : 27° 42' 2.42" Elevation, m : 134.740
Borehole No : KA_3/LB
Easting : 83° 15' 46.06" Northing : 27° 43' 2.77" Elevation, m : 131.350
Borehole No : KA_4/LB
Easting : 83° 15' 46.56" Northing : 27° 43' 3.17" Elevation, m : 132.100

Location	Design Pile Length m	Design Working load on pile (non - seismic case)kn	Allowable Bearing Capacity on pile (Scour case)kn	Allowable Bearing Capacity of the Pile (Non Scour case)kn
Abutment	29.00	1608	1942	2059
Pier	23.70	1227	2750	3618

NOTE ON SUB-SOIL PROFILE
The sub-soil profile shown here is based on information obtained from the investigation bore-holes at the locations as shown. The actual soil type away from the vicinity of the boreholes may differ.

	Name(NEC Number)	Signature
P. Engineer	P. Upadhyaya (Civil A 675)	
Structure Engineer	K.P.Wagle(Civil A 127) / P.Shrestha(Civil A 676) / S.Bhattarai (Civil A 904)	
Hydrologist	Dr. P.C. Jha(Civil A 166) / S. Adhikari (Civil A 408)	
Geotechnical Engineer	A. Adhikari(ka 199) / Dr. V. R. S. Shahi	

Government of Nepal
Ministry of Physical Infrastructure and Transport
Department of Roads
Project Directorate Office (ADB)
SASEC Highway Improvement Project-
Project Preparatory Consultant (SHIP-PPC)
ADB Loan No: 3722-NEP

CONSULTANT:
Soosung Engineering Co. Ltd, Korea
in association with
ERMC P (Ltd)
and
Tech Studio of Engineeering Nepal

IMPLEMENTING AGENCY:
DOR, DCID

ROAD NAME:
East West Highway (H01)

Butwal - Gorusinghe Section

SHEET TITLE:
Bore Log of **Kanchan Bridge** (46/H001/306_A)

SCALE:
1:250

	NAME	SIGNATURE	REV NO.	DESCRIPTION
Designed by:				
Checked by:	P. Upadhyaya			
Approved by:	Dr. T.H.Choi			

DATE: November,2022
DWG.NO.: 306_kanchan
SHEET NO.: 06/27

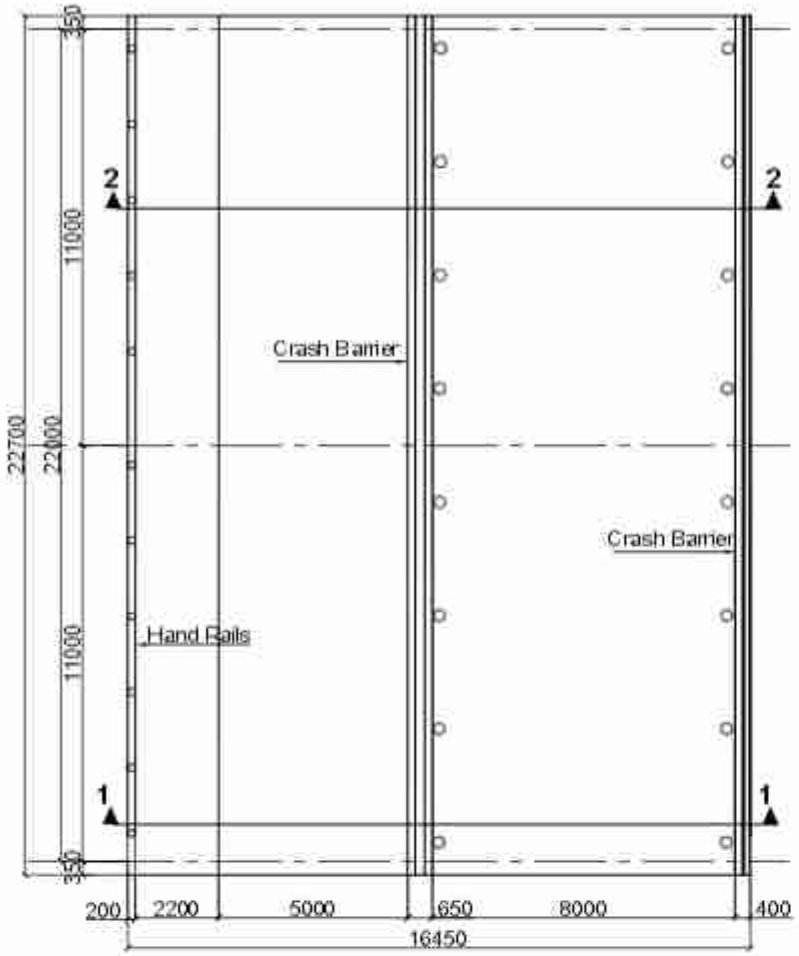

Plan Of Deck
Scale:-1:200

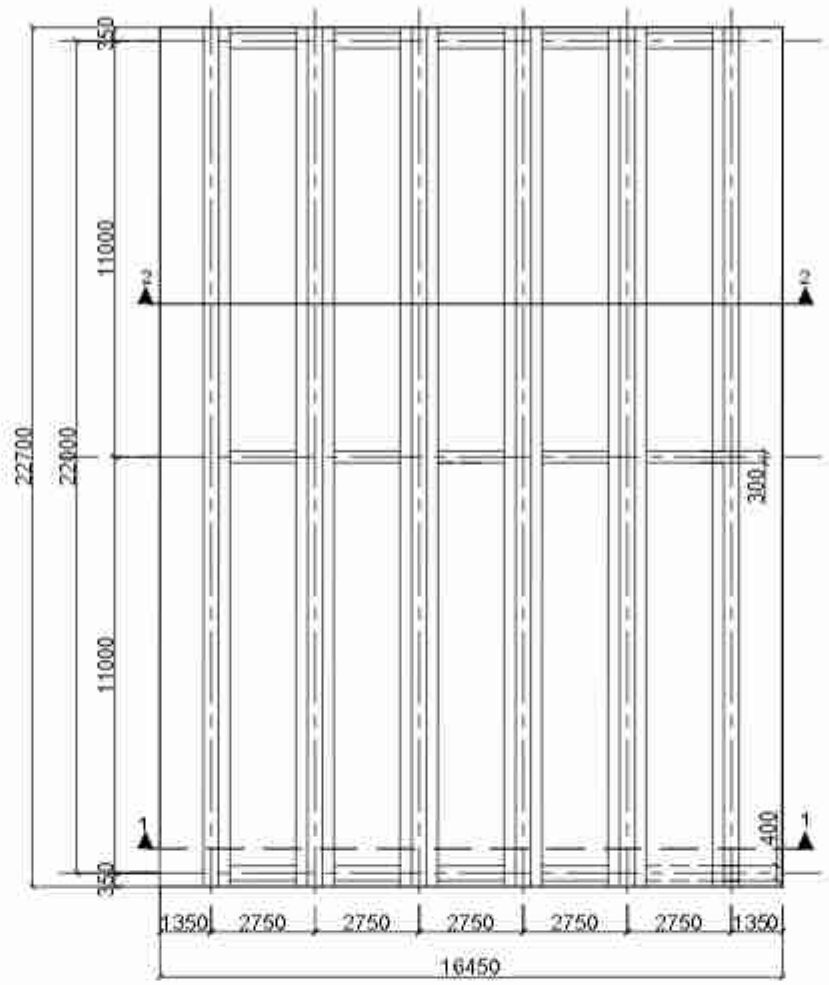

Plan Of Girder
Scale:-1:200

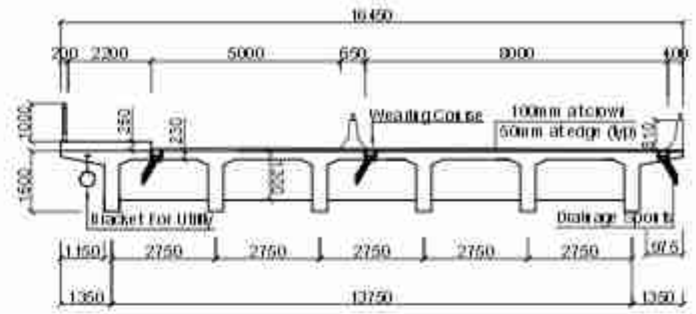

Section At 1-1
Scale:-1:100

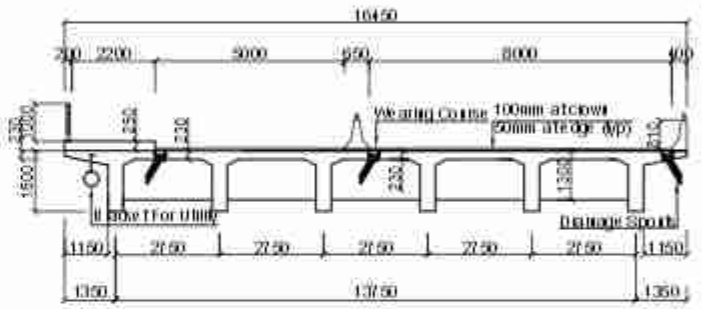

Section At 2-2
Scale:-1:100

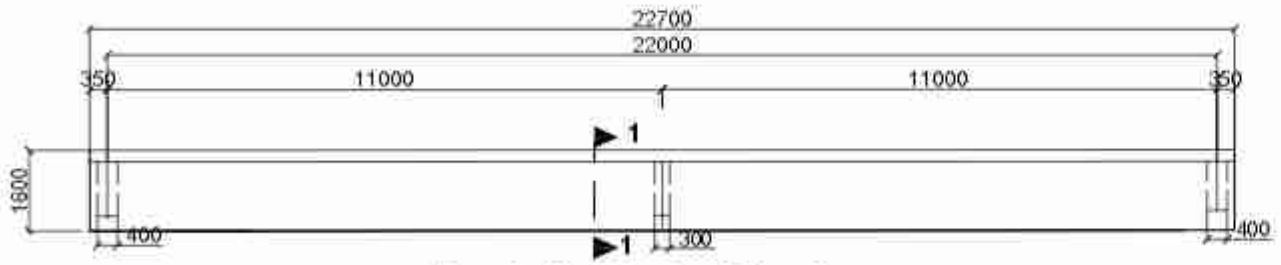

Longitudinal Sectional Elevation
Scale:-1:150

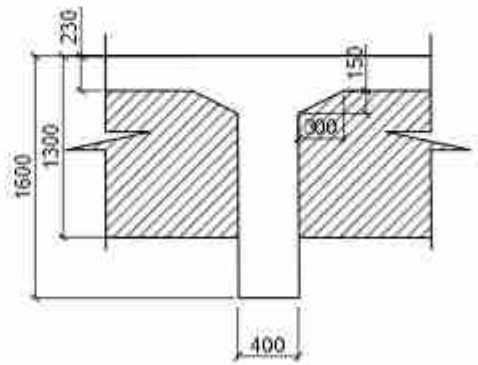

Section 1-1 Main Girder
Scale:-1:50

NOTES:
Dowel bars similar to the longitudional bars ofthe cross section girders shall be placed in the precast main girder before casting. The longitudional bars of the cross girder shall be lapped to the dowel bers, which shall have a lap length of 60 dia. ofthe corresponding bars.

NOTE:
The bridge has been designed to safely carry three driving lanes. If required in future the footpath can be used as driving lane, moving the crash barrier to the location of the hand-rails.

Government of Nepal Ministry of Physical Infrastructure and Transport **Department of Roads** **Project Directorate Office (ADB)** **SASEC Highway Improvement Project-** **Project Preparatory Consultant (SHIP-PPC)** **ADB Loan No: 3722-NEP**	**CONSULTANT:** Soosung Engineering Co. Ltd, Korea in association with ERMC P (Ltd) and Tech Studio of Engineeering Nepal	**IMPLEMENTING AGENCY:** **DOR, DCID** **ROAD NAME:** **East West Highway (H01)** **Butwal - Gorusinghe Section**	**SHEET TITLE:** Detail of Superstructure of **Kanchan Bridge** (46/H001/306_A)	**SCALE:** As Shown		NAME	SIGNATURE	REV NO.	DESCRIPTION	DATE: November,2022
					Designed by:	Saroj Bhattara				DWG.NO.: 306_Kanchan
					Checked by:	P. Upadhyaya				
					Approved by:	Dr. T.H.Choi				SHEET NO.: 07/27

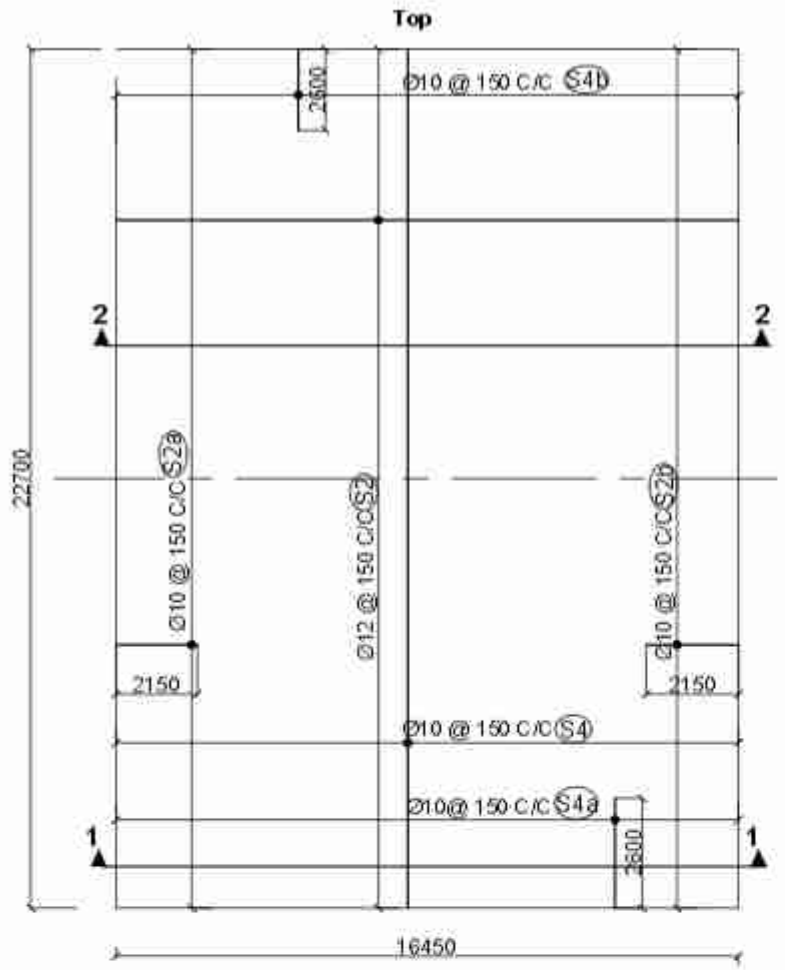

Reinforcement Details Of Deck Slab(Top Face)
Scale:-1:200

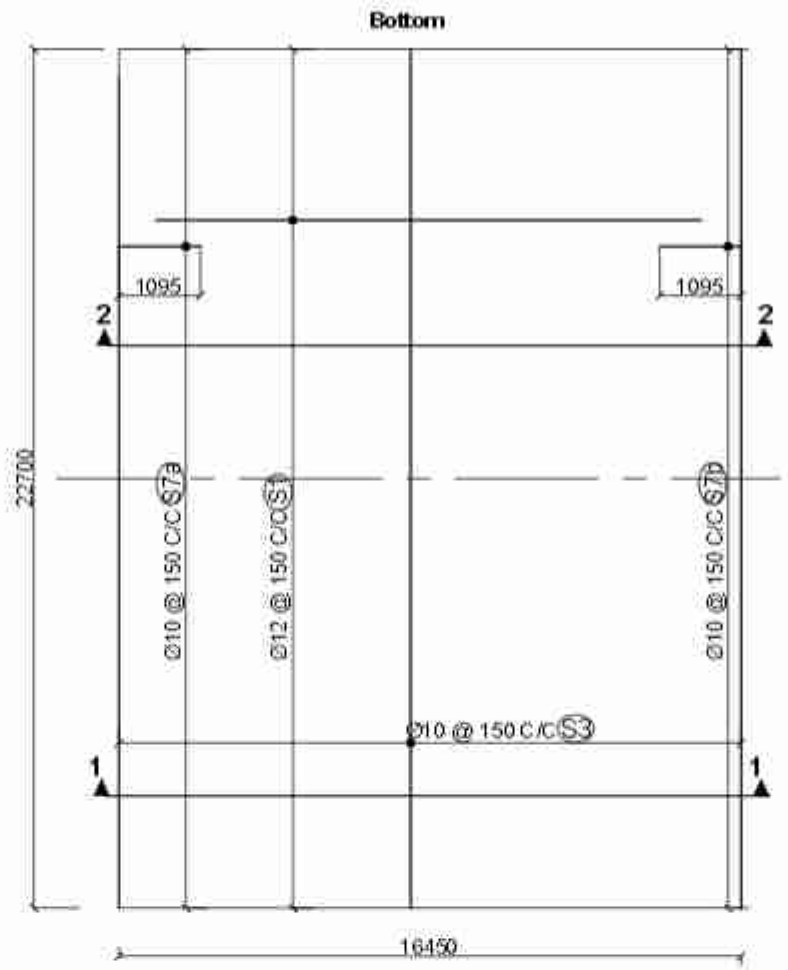

Reinforcement Details Of Deck Slab(Bottom Face)
Scale:-1:200

NOTE:

1.On Shear Connection:
The transverse bars of the deck slab(S2) shall be tied to vertical stirrups of the longitudinal girders.

2.Top Surface of the Main Girder:
Surface to be roughened by wire brush immediately after initial setting. The surface shall be properly cleaned by pressure blower prior to casting of the deck concrete

3.On Wearing Course:
The level of wearing course along the longitudinal direction shall be kept horizontal throughout the length of the deck. The thickness of wearing course towards the ends along the deck shall be increased suitably to compensate for the slope due to hogging of the girder by pre stress.

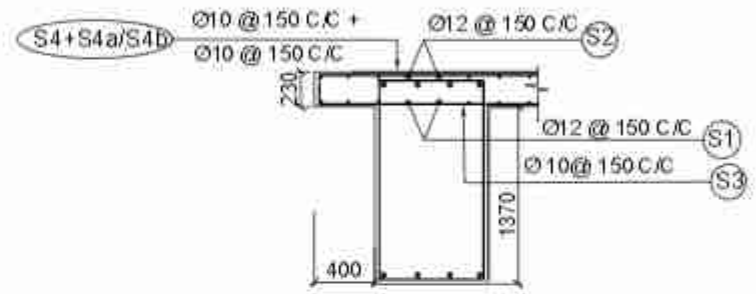

Reinforcement Details At Deck Extension
Between The Main Girder

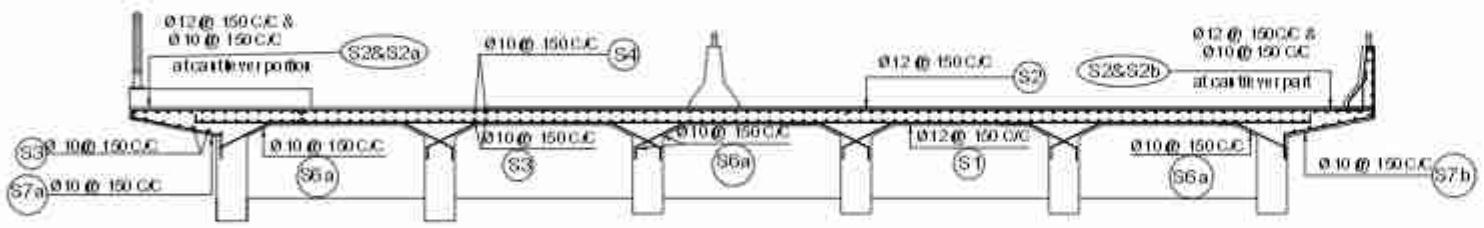

Section At 1-1
Scale:-1:75

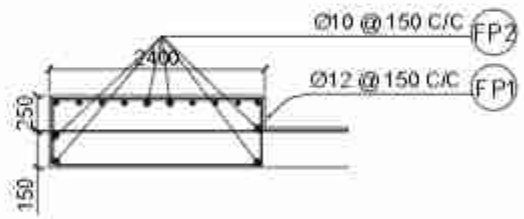

Reinforcement Details At Footpath
Scale:- 1:20

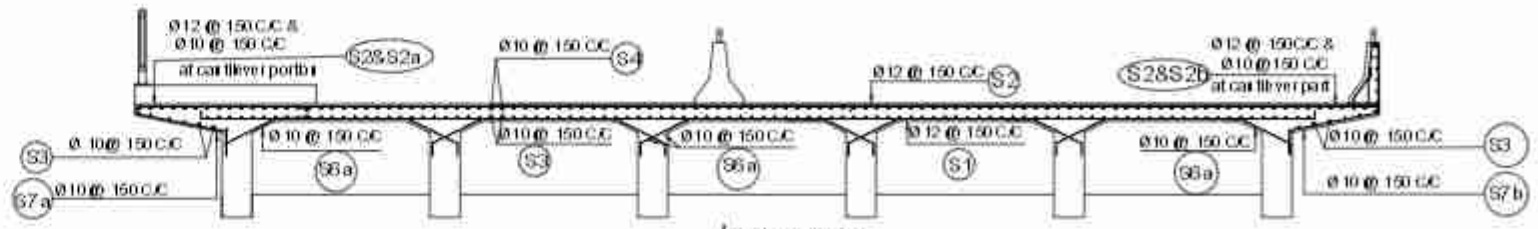

Section At 2-2
Scale:-1:75

Government of Nepal Ministry of Physical Infrastructure and Transport **Department of Roads** **Project Directorate Office (ADB)** **SASEC Highway Improvement Project-** **Project Preparatory Consultant (SHIP-PPC)** **ADB Loan No: 3722-NEP**	**CONSULTANT:** Soosung Engineering Co. Ltd, Korea in association with ERMC P (Ltd) and Tech Studio of Engineeering Nepal	**IMPLEMENTING AGENCY:** **DOR, DCID** **ROAD NAME:** **East West Highway (H01)** **Butwal - Gorusinghe Section**	**SHEET TITLE:** Reinforcement Details of Slab of **Kanchan Bridge** (46/H001/306_A)	**SCALE:** As Shown		NAME	SIGNATURE	REV NO.	DESCRIPTION	DATE: November,2022
					Designed by:	Saroj Bhattara				DWG.NO.: 306_Kanchan
					Checked by:	P. Upadhyaya				
					Approved by:	Dr. T.H.Choi				SHEET NO.: 08/27

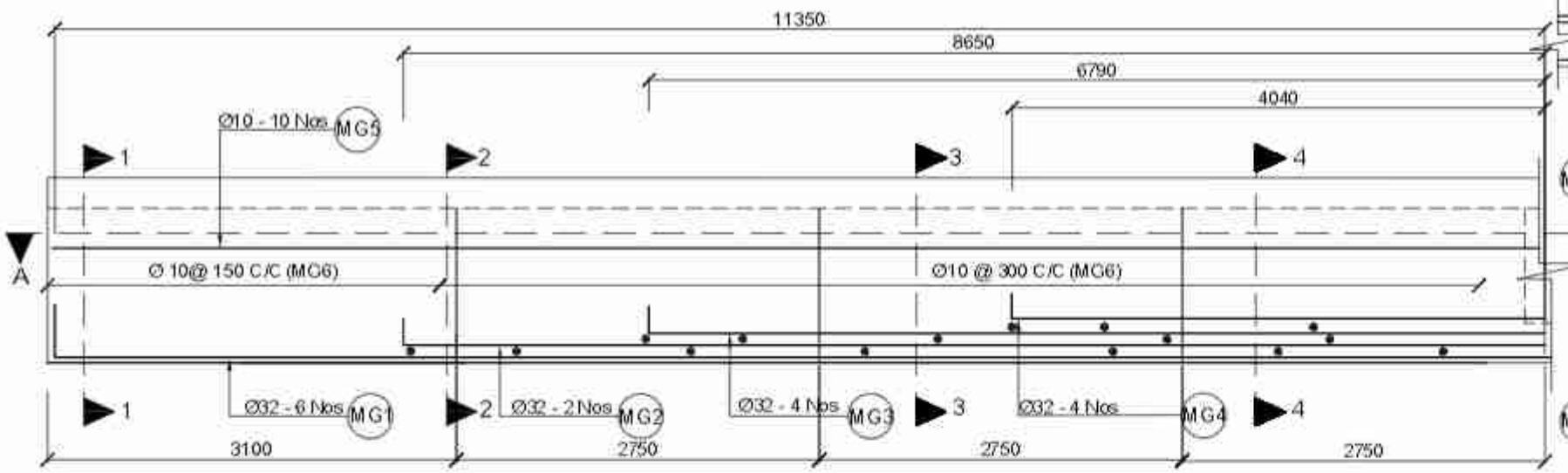

Reinforcement Details At Sectional Elevation Of Main Girder
Scale:- 1:50

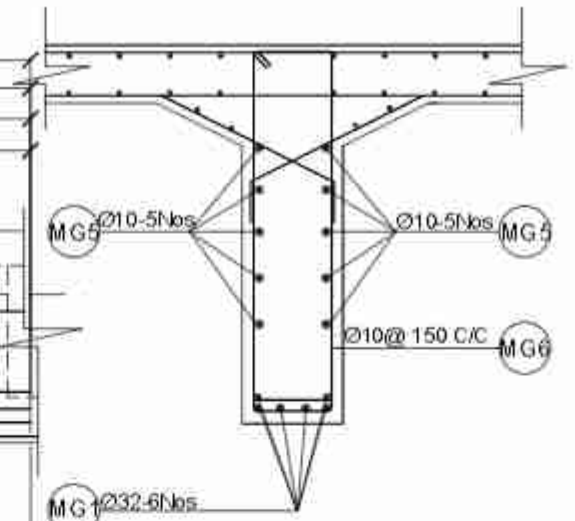

Section At 1-1
Scale:- 1:30

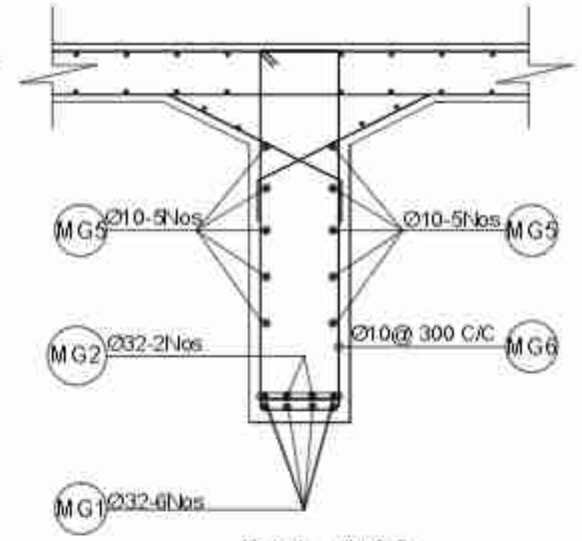

Section At 2-2
Scale:- 1:30

MG1			MG1
MG1	MG1	MG1	MG1

Diagram of Bar Position
Section At 1-1

MG1	MG2	MG2	MG1
MG1	MG1	MG1	MG1

Diagram of Bar Position
Section At 2-2

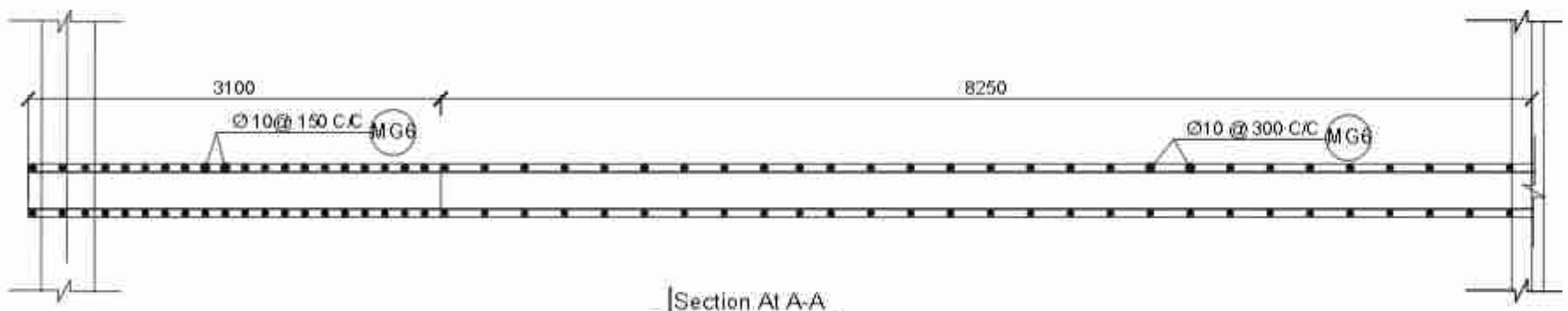

Section At A-A
Scale : 1:50

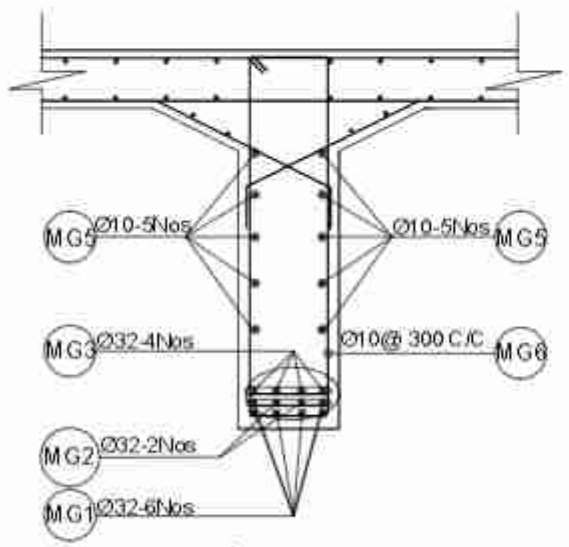

Section At 3-3
Scale:- 1:30

MG3	MG3	MG3	MG3
MG1	MG2	MG2	MG1
MG1	MG1	MG1	MG1

Diagram of Bar Position
Section At 3-3

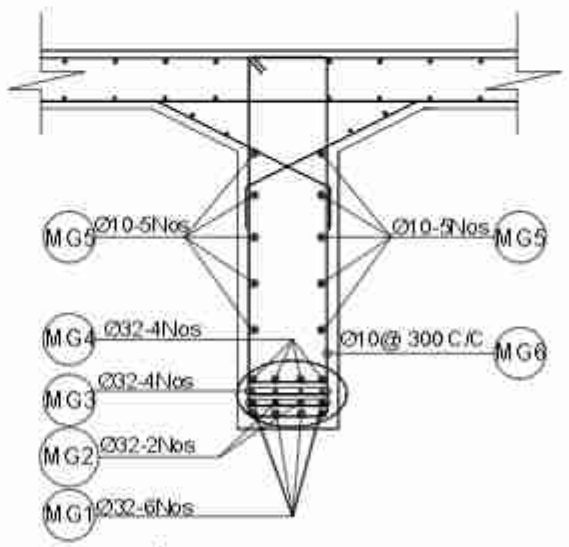

Section At 4-4
Scale:- 1:30

MG4	MG4	MG4	MG4
MG3	MG3	MG3	MG3
MG1	MG2	MG2	MG1
MG1	MG1	MG1	MG1

Diagram of Bar Position
Section At 4-4

Government of Nepal Ministry of Physical Infrastructure and Transport **Department of Roads** **Project Directorate Office (ADB)** **SASEC Highway Improvement Project-** **Project Preparatory Consultant (SHIP-PPC)** **ADB Loan No: 3722-NEP**	**CONSULTANT:** Soosung Engineering Co. Ltd, Korea in association with ERMC P. (Ltd) and Tech Studio of Engineeering Nepal	**IMPLEMENTING AGENCY:** **DOR, DCID** **ROAD NAME:** **East West Highway (H01)** **Butwal - Gorusinghe Section**	**SHEET TITLE:** Reinforcement Details of Main Girder of **Kanchan Bridge** (46/H001/306_A)	**SCALE:** As Shown		**NAME**	**SIGNATURE**	**REV NO.**	**DESCRIPTION**	**DATE:** November,2022
					Designed by:	Saroj Bhattara				
					Checked by:	P. Upadhyaya				**DWG.NO.:** 306_Kanchan
					Approved by:	Dr. T.H.Choi				**SHEET NO.:** 09/27

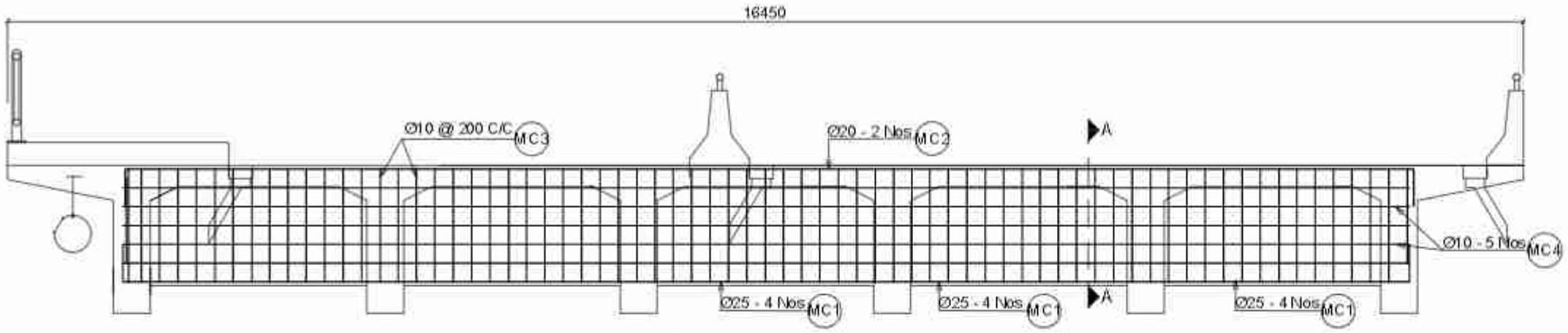

Intermediate Cross Girders
Scale: 1:60

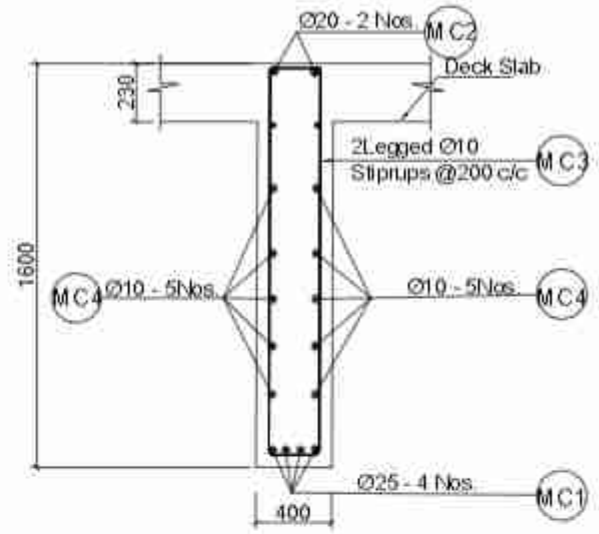

Section at A-A
Scale: 1:30

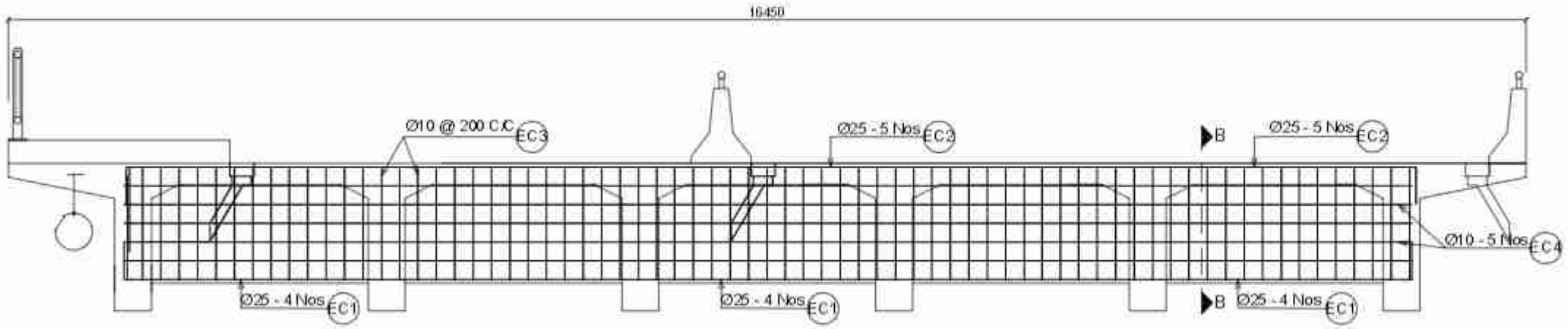

End Cross Girders
Scale: 1:60

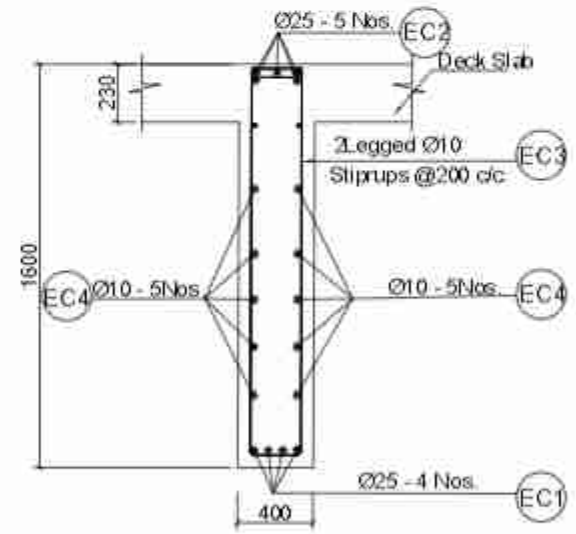

Section at B-B
Scale: 1:30

Government of Nepal Ministry of Physical Infrastructure and Transport **Department of Roads** **Project Directorate Office (ADB)** **SASEC Highway Improvement Project-** **Project Preparatory Consultant (SHIP-PPC)** **ADB Loan No: 3722-NEP**	**CONSULTANT:**	**IMPLEMENTING AGENCY:**	**SHEET TITLE:**	**SCALE:**		**NAME**	**SIGNATURE**	**REV NO.**	**DESCRIPTION**	**DATE:**
	Soosung Engineering Co. Ltd, Korea in association with ERMC P. (Ltd) and Tech Studio of Engineeering Nepal	**DOR, DCID**	Anchorage Details of **Kanchan Bridge** (46/H001/306_A)	As Shown	Designed by:	Saroj Bhattara				November,2022
		ROAD NAME:			Checked by:	P. Upadhyaya				**DWG.NO.:** 306_Kanchan
		East West Highway (H01)			Approved by:	Dr. T.H.Choi				**SHEET NO.:** 10/27
		Butwal - Gorusinghe Section								

BAR BENDING SCHEDULE OF DECK SLAB

BAR ID	SKETCH (mm)	SPACING (mm)	Ø OF BARS (mm)	NO. OF BARS	LENGTH (m)	WEIGHT/LENGTH (kg/m)	TOTAL WEIGHT (kg)
S1	14750 100	150/7 Nos meter	12	152	14.950	0.888	2017.473
S2	16358 100	150/7 Nos meter	12	152	16.560	0.888	2234.740
S2a	100 2150 Additional Bars At left Cantilever	150 in Between S2	10	152	2.250	0.617	210.856
S2b	2150 100 Additional Bars At Right Cantilever	150 in Between S2	10	152	2.250	0.617	210.856
S3	22610 155	Mid Deck 150	10	100	22.920	0.617	1413.107
		Left Cantilever 150	10	10	22.920	0.617	141.311
		Right Cantilever 150	10	10	22.920	0.617	141.311
S4	22610 155	150/7 Nos Per Meter	10	111	22.920	0.617	1568.549
S4a	155 2600 Additional Bars At left Deck End	150 in Between S4	10	111	2.755	0.617	188.541
S4b	2600 155 Additional Bars At Right Deck End	150 in Between S4	10	111	2.755	0.617	188.541
S6a	450 732 200	150	10	1410	1.380	0.617	1199.662
S7a	100 1095 200 Outer Side Of left Exterior Girder	150/7 Nos Per Meter	10	306	1.400	0.617	264.125
S7b	200 1095 100 Outer Side Of Right Exterior Girder	150/7 Nos Per Meter	10	306	1.400	0.617	264.125
TOTAL EXCLUDING FOOTPATHS (in kg)							10043.198
TOTAL WEIGHT (IN METRIC TON)							10.043

BAR BENDING SCHEDULE FOR RCC MAIN GIRDER

BAR ID	SHAPE OF BAR IN mm (NOT TO SCALE)	Ø OF BARS (mm)	NO. OF BARS	LENGTH (m)	WEIGHT/LENGTH (kg/m)	TOTAL WEIGHT (kg)
MG1	400 22585 400	32	6	23.390	6.313	886.017
MG2	200 17300 200	32	2	17.700	6.313	223.493
MG3	200 13580 200	32	4	13.980	6.313	353.040
MG4	200 8080 200	32	4	8.480	6.313	214.149
MG5	22620	10	10	22.620	0.617	139.461
MG6	275 1610 310	10	104	3.790	0.617	243.015
MG7	320 Spacer Bar	32	38	0.320	6.313	76.770
TOTAL WEIGHT IN 1 GIRDER						2135.949
TOTAL NUMBER OF GIRDERS AND TOTAL WEIGHT (IN METRIC TON)						2.136

BAR BENDING SCHEDULE FOR END CROSS GIRDERS

BAR ID	SKETCH (mm)	SPACING (mm)	Ø OF BARS (mm)	NO. OF BARS	LENGTH (m)	WEIGHT/LENGTH (kg/m)	TOTAL WEIGHT (kg)
EC1	400 14045 400	@ 92 c/c	25	4	14.845	3.853	228.813
EC2	14045 400 400	varies @ 138 c/c, @ 276 c/c	25	5	14.845	3.853	286.016
EC3	275 1210 310	@ 200 c/c	10	72	3.160	0.617	140.275
EC4	14070 295 Nos each face	0	10	10	14.070	0.617	86.747
TOTAL WEIGHT IN 1 GIRDER(in kg)							741.851
TOTAL NUMBER OF GIRDERS AND TOTAL WEIGHT 2 (IN METRIC TON)							1.484

BAR BENDING SCHEDULE OF FOOTHPATH

BAR ID	SHAPE OF BAR IN mm (NOT TO SCALE)	SPACING (MM)	Ø OF BARS (mm)	NO. OF BARS	LENGTH (m)	WEIGHT/LENGTH (KG/m)	TOTAL WEIGHT (kG)
FP1	2320 2*100 400	150	12	152	5.640	0.888	761.107
FP2	22610	150	10	21	22.610	0.617	292.739
ONE SIDE							1053.846
TOTAL WEIGHT IN METRIC TON							1.054

BAR BENDING SCHEDULE FOR INTERMEDIATE CROSS GIRDERS

BAR ID	SKETCH (mm)	SPACING (mm)	Ø OF BARS (mm)	NO. OF BARS	LENGTH (m)	WEIGHT/LENGTH (kg/m)	TOTAL WEIGHT (kg)
MC1	400 13945 400	@ 175 c/c	25	4	14.745	3.853	227.272
MC2	13945 400 400	@ 175 c/c	20	2	14.745	2.466	72.727
MC3	275 1210 210	@ 200 c/c	10	69	2.960	0.617	125.922
MC4	13970 295 Nos Each Face		10	10	13.970	0.617	86.130
TOTAL WEIGHT IN 1 GIRDER(in kg)							512.051
TOTAL NUMBER OF GIRDERS AND TOTAL WEIGHT 1 (IN METRIC TON)							0.512

Government of Nepal Ministry of Physical Infrastructure and Transport **Department of Roads** **Project Directorate Office (ADB)** **SASEC Highway Improvement Project-** **Project Preparatory Consultant (SHIP-PPC)** **ADB Loan No: 3722-NEP**	**CONSULTANT:** Soosung Engineering Co. Ltd, Korea in association with ERMC P (Ltd) and Tech Studio of Engineeering Nepal	**IMPLEMENTING AGENCY:** **DOR, DCID** **ROAD NAME:** **East West Highway (H01)** **Butwal - Gorusinghe Section**	**SHEET TITLE:** B.B.S. of Slab & Main Girder of **Kanchan Bridge** (46/H001/306_A)	**SCALE:** As Shown		NAME	SIGNATURE	REV NO.	DESCRIPTION	DATE: November,2022
					Designed by:	Saroj Bhattara				DWG.NO.: 306_Kanchan
					Checked by:	P. Upadhyaya				
					Approved by:	Dr. T.H.Choi				SHEET NO.: 11/27

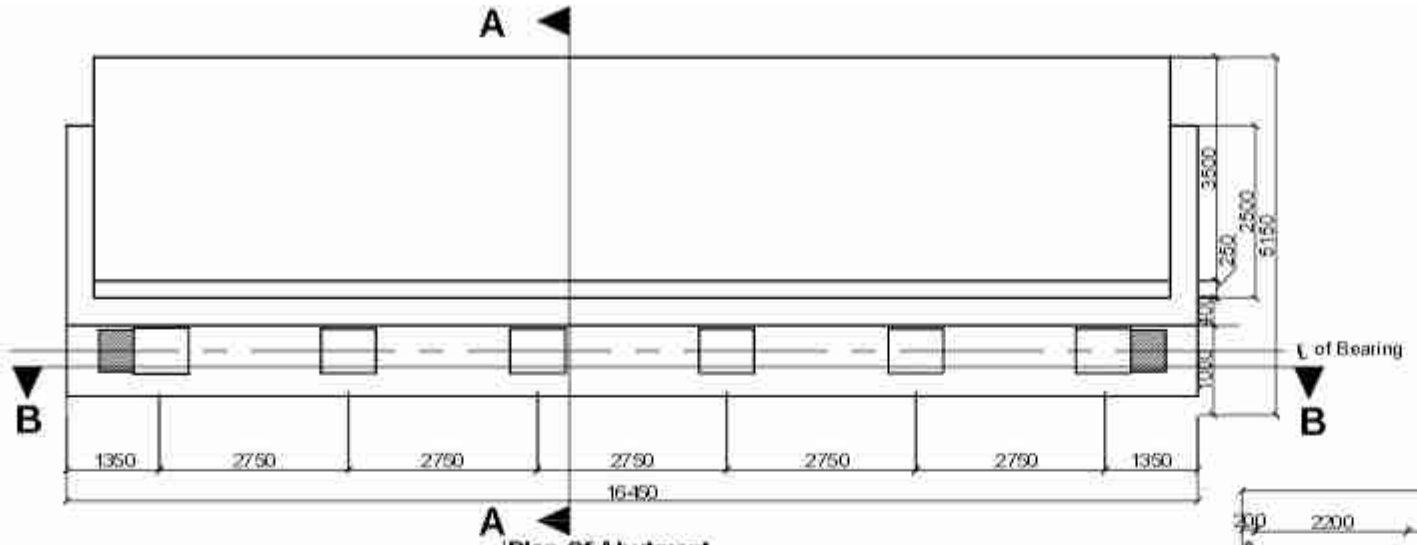

Plan Of Abutment
Scale:-1:100

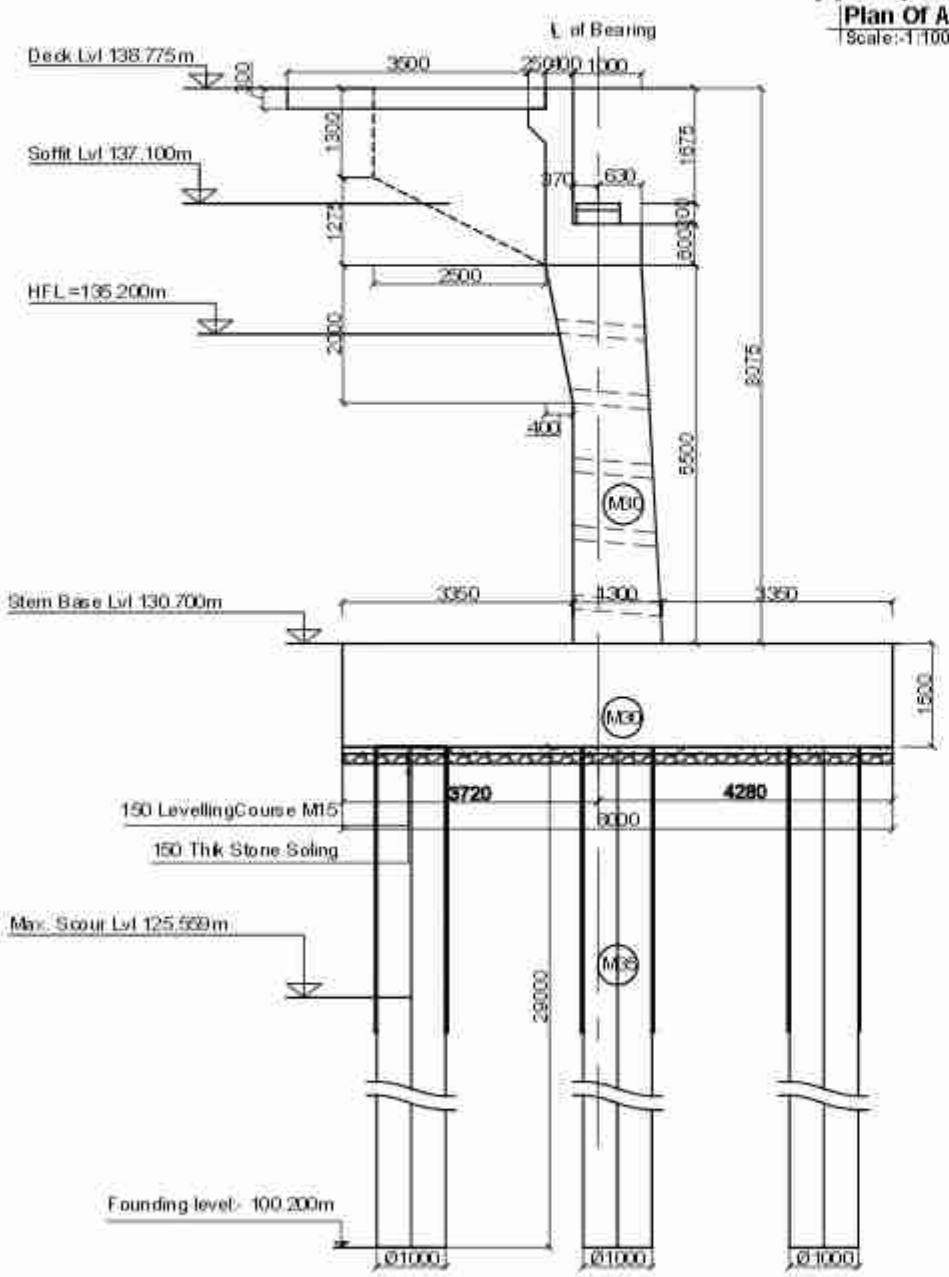

Section Of Abutment At (A-A)
Scale:-1:100

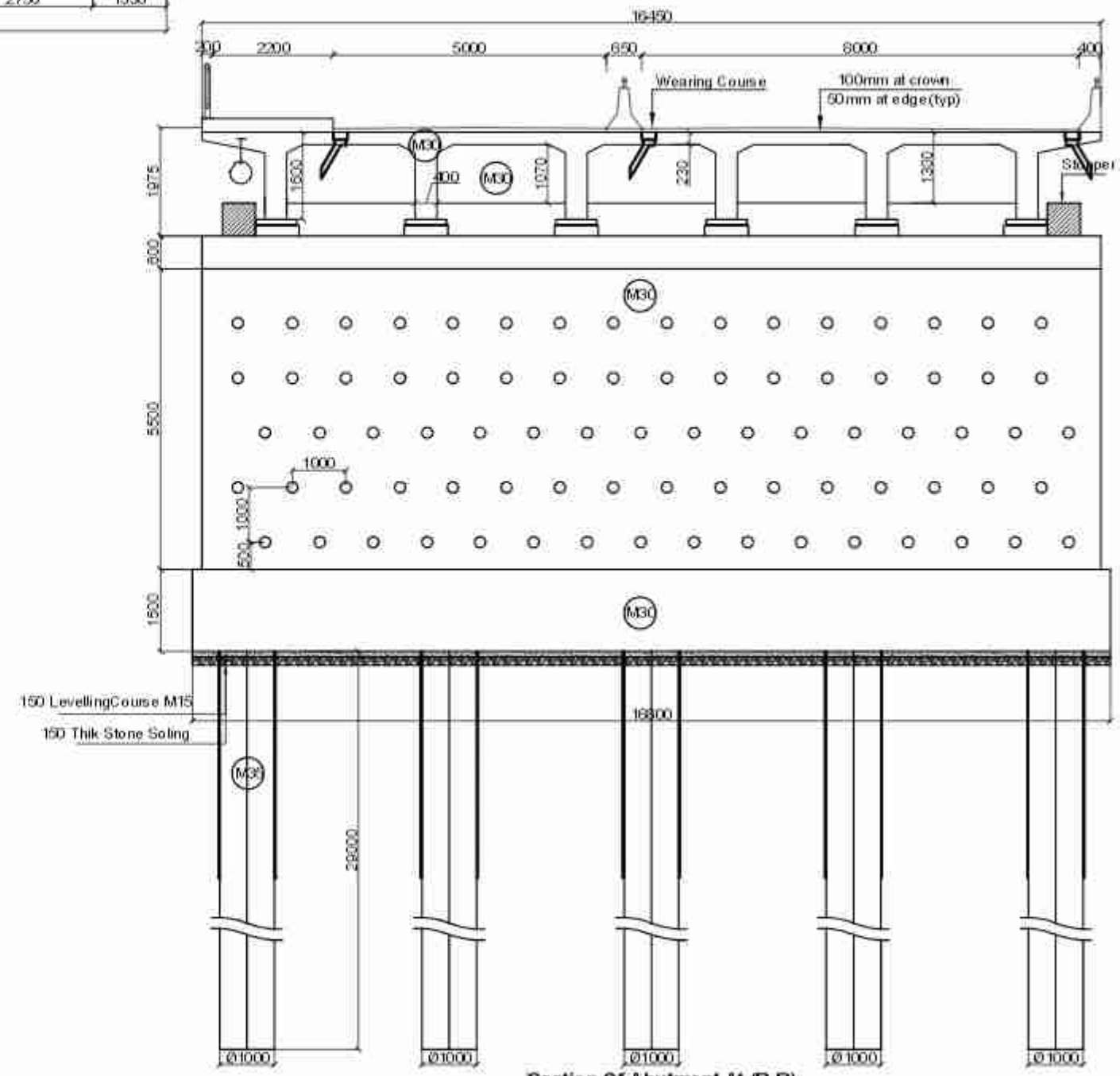

Section Of Abutment At (B-B)
Scale:-1:100

Government of Nepal Ministry of Physical Infrastructure and Transport **Department of Roads** **Project Directorate Office (ADB)** **SASEC Highway Improvement Project-** **Project Preparatory Consultant (SHIP-PPC)** **ADB Loan No: 3722-NEP**	**CONSULTANT:** Soosung Engineering Co. Ltd, Korea in association with ERMC P (Ltd) and Tech Studio of Engineeering Nepal	**IMPLEMENTING AGENCY:** **DOR, DCID** **ROAD NAME:** **East West Highway (H01)** **Butwal - Gorusinghe Section**	**SHEET TITLE:** Detail of Abutment of **Kanchan Bridge** (46/H001/306_A)	**SCALE:** As Shown		**NAME**	**SIGNATURE**	**REV NO.**	**DESCRIPTION**	**DATE:** November,2022
					Designed by:	Saroj Bhattara				**DWG.NO.:** 306_Kanchan
					Checked by:	P. Upadhyaya				
					Approved by:	Dr. T.H.Choi				**SHEET NO.:** 12/27

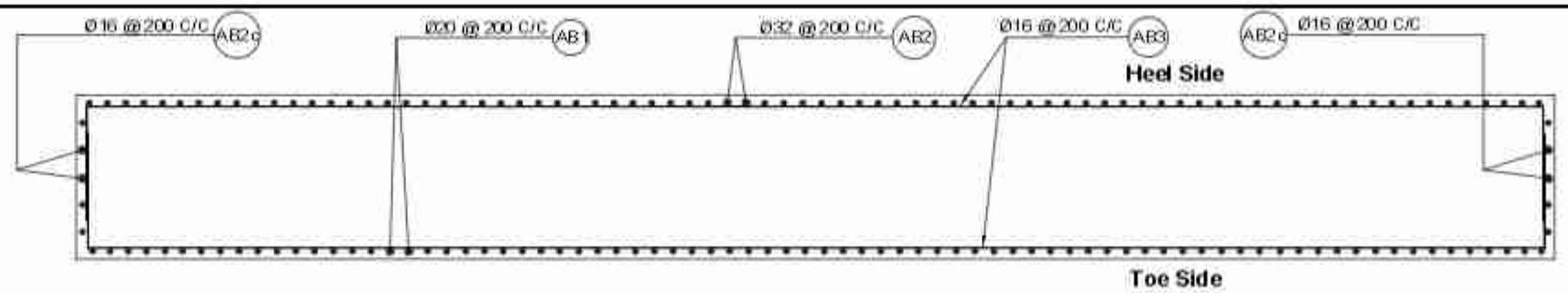

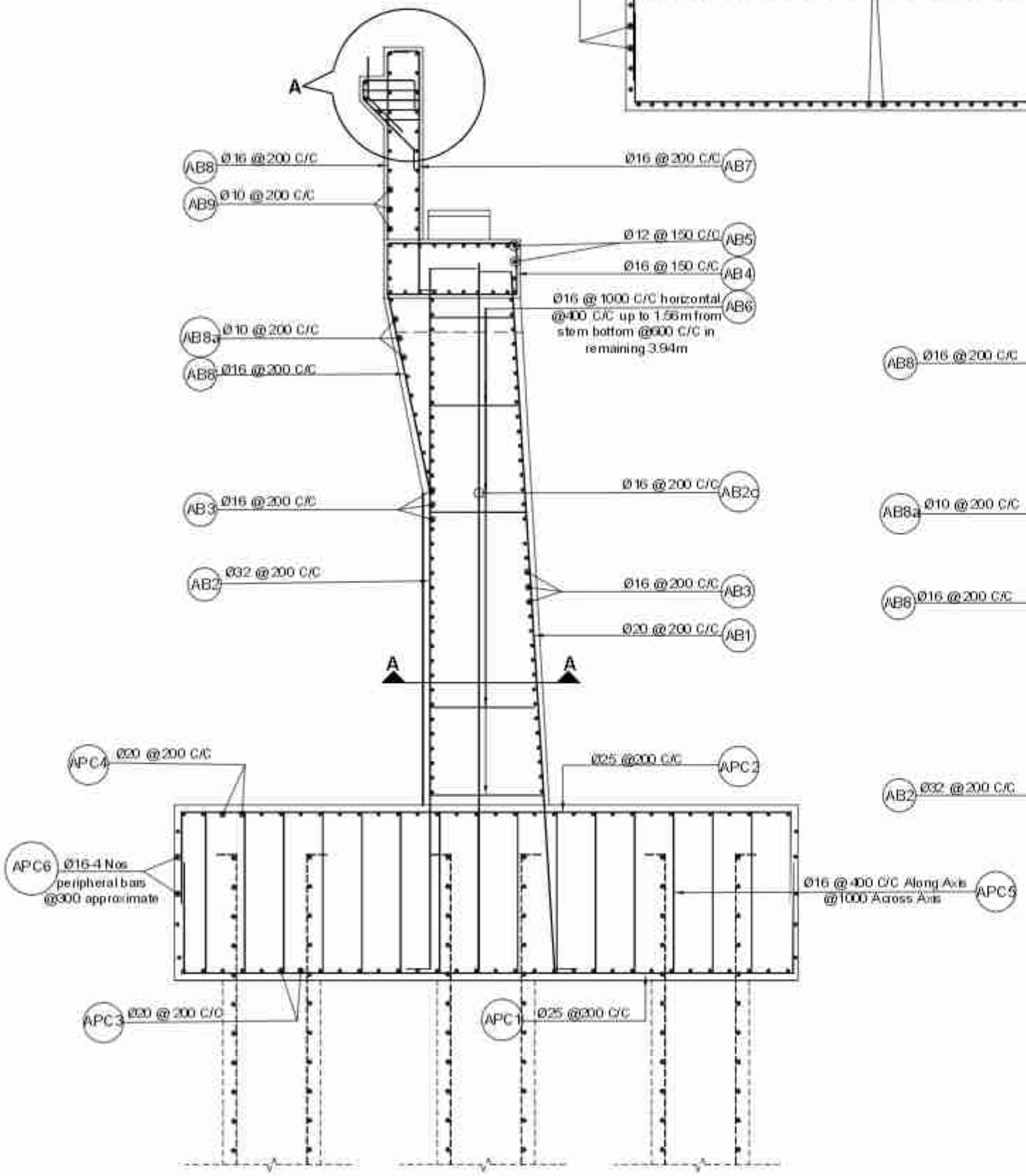

Reinforcement Details Of Abutment
Scale:-1:50

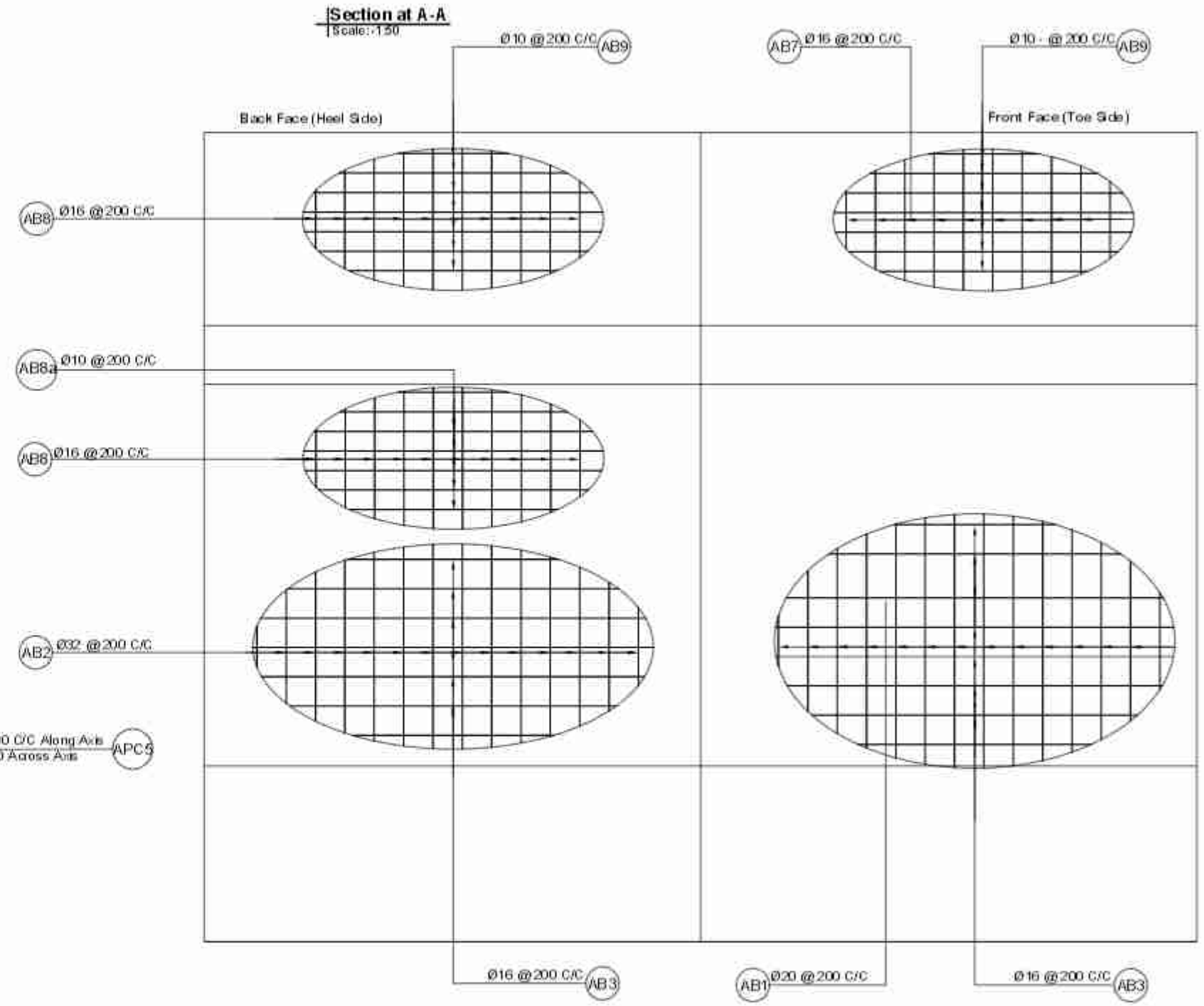

Reinforcement Details Of Abutment
Scale:-1:50

Government of Nepal Ministry of Physical Infrastructure and Transport **Department of Roads** **Project Directorate Office (ADB)** **SASEC Highway Improvement Project-** **Project Preparatory Consultant (SHIP-PPC)** **ADB Loan No: 3722-NEP**	**CONSULTANT:** Soosung Engineering Co. Ltd, Korea in association with ERMC P (Ltd) and Tech Studio of Engineeering Nepal	**IMPLEMENTING AGENCY:** **DOR, DCID**	**SHEET TITLE:** Reinforcement Details of Abutment of **Kanchan Bridge** (46/H001/306_A)	**SCALE:** As Shown		**NAME**	**SIGNATURE**	**REV NO.**	**DESCRIPTION**	**DATE:** November,2022
		ROAD NAME: **East West Highway (H01)**			Designed by:	Saroj Bhattara				**DWG.NO.:** 306_Kanchan
		Butwal - Gorusinghe Section			Checked by:	P. Upadhyaya				**SHEET NO.:** 13/27
					Approved by:	Dr. T.H.Choi				

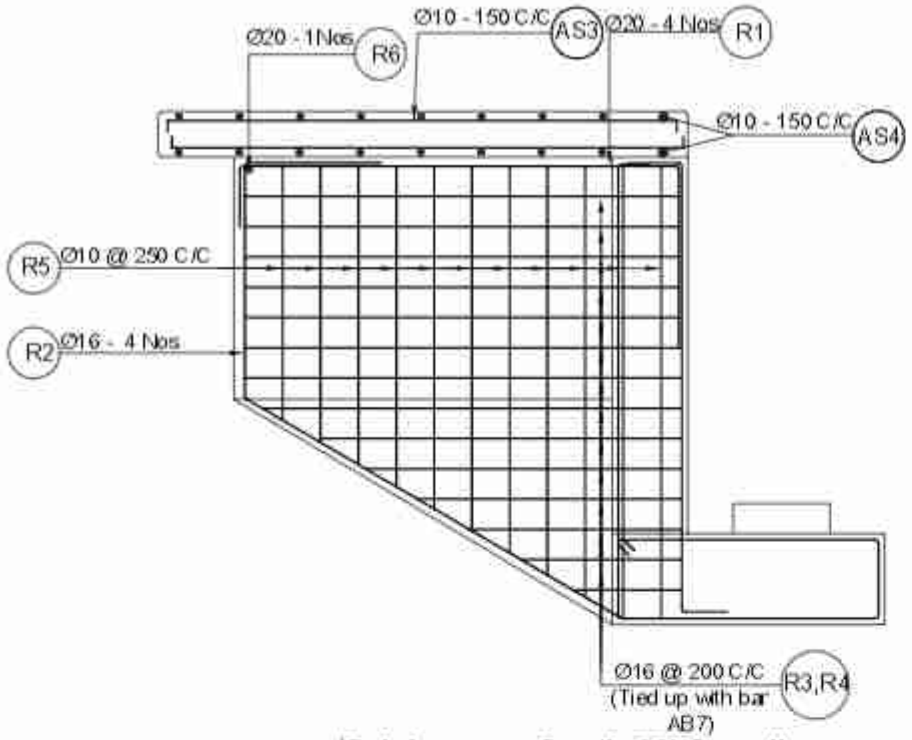

Reinforcement Details Of Wingwall
Scale:- 1:50

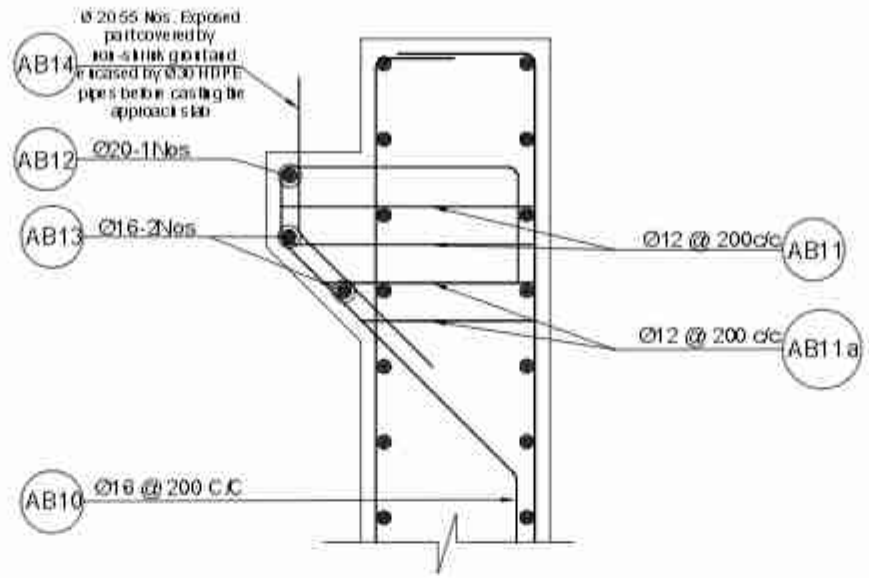

Detail At A
Scale:- 1:20

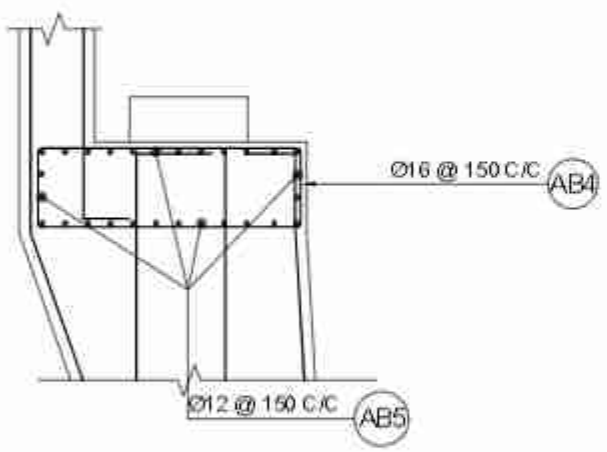

Reinforcement Details Of Abutment
Scale:- 1:50

BAR BENDING SCHEDULE OF WING WALL

BAR ID	SHAPE OF BAR (in mm (NOT TO SCALE)	SPACING (MM)	Ø OF BARS (mm)	NO. OF BARS	LENGTH (m)	WEIGHT/LENGTH (KG/m)	TOTAL WEIGHT (KG)
R1	400 2807 1200		20	8	4.407	2.466	86.947
R2	300 1207 2830		16	8	4.317	1.578	54.510
R3	2714 214 2*150		16	14	6.156	1.578	136.028
R4	Avg 1350 214 2*150		16	14	3.428	1.578	75.748
R5	182 Avg 1938		10	22	4.540	0.617	61.580
R6	307		20	2	0.307	2.466	1.514
R7	2800		10	4	2.800	0.617	6.905
R8	350 260		10	16	1.320	0.617	12.207
TOTAL IN 2 WING WALL IN ONE ABUTMENT							435.439
TOTAL WEIGHT IN METRIC TON							0.435

BAR BENDING SCHEDULE OF ABUTMENT

BAR ID	SHAPE OF BAR (in mm (NOT TO SCALE)	SPACING (MM)	Ø OF BARS (mm)	NO. OF BARS	LENGTH (m)	WEIGHT/LENGTH (KG/m)	TOTAL WEIGHT (KG)
AB1	300 7380 90 500	200	20	83	8.180	2.466	167.372
AB2	500 7380 500	200	32	83	8.380	6.313	4391.194
AB2c	7380 500	200	16	12	7.880	1.578	149.248
AB3	16285 average 850 16285	200	16	58	34.270	1.578	3137.203
AB4	100 515 1235	150	16	111	3.700	1.578	648.224
AB5	16300	150	12	24	16.300	0.888	347.314
AB6	Length Varies 1135-835 Spacing Hook Length 100 1000 C/C horizontal 400 C/C vertical upto 1.50m from bottom 600 C/C vertical alternating 3.0m	16		189	1.433	1.578	425.211
AB7	250 2575 300	200	16	83	3.125	1.578	409.382
AB8	250 2500 2040 300	200	16	83	5.090	1.578	666.801
AB8a	16300	200	10	12	16.300	0.617	120.595
AB9	16200 268	200	10	11	33.116	0.617	224.590
AB10	500 300 300 647 200	200	16	79	1.747	1.578	217.831
AB11	500 200 200		12	150	0.900	0.888	126.247
AB11a	250 average 200 200		12	150	0.650	0.888	91.179
AB12	16300		20	1	16.300	2.466	40.196
AB13	16300		16	2	16.300	1.578	51.454
AB14	400 500		20	55	0.900	2.466	122.075
TOTAL WEIGHT IN ONE ABUTMENT							12843.119
TOTAL WEIGHT IN METRIC TON							12.843

Government of Nepal Ministry of Physical Infrastructure and Transport **Department of Roads** **Project Directorate Office (ADB)** **SASEC Highway Improvement Project-** **Project Preparatory Consultant (SHIP-PPC)** **ADB Loan No: 3722-NEP**	**CONSULTANT:** Soosung Engineering Co. Ltd, Korea in association with ERMC P (Ltd) and Tech Studio of Engineering Nepal	**IMPLEMENTING AGENCY:** **DOR, DCID** **ROAD NAME:** **East West Highway (H01)** **Butwal - Gorusinghe Section**	**SHEET TITLE:** Reinforcement Details of Wingwall of **Kanchan Bridge** (46/H001/306_A)	**SCALE:** As Shown		**NAME**	**SIGNATURE**	**REV NO.**	**DESCRIPTION**	**DATE:** November,2022 **DWG.NO.:** 306_Kanchan **SHEET NO.:** 14/27
					Designed by:	Saroj Bhattarai				
					Checked by:	P. Upadhyaya				
					Approved by:	Dr. T.H.Choi				

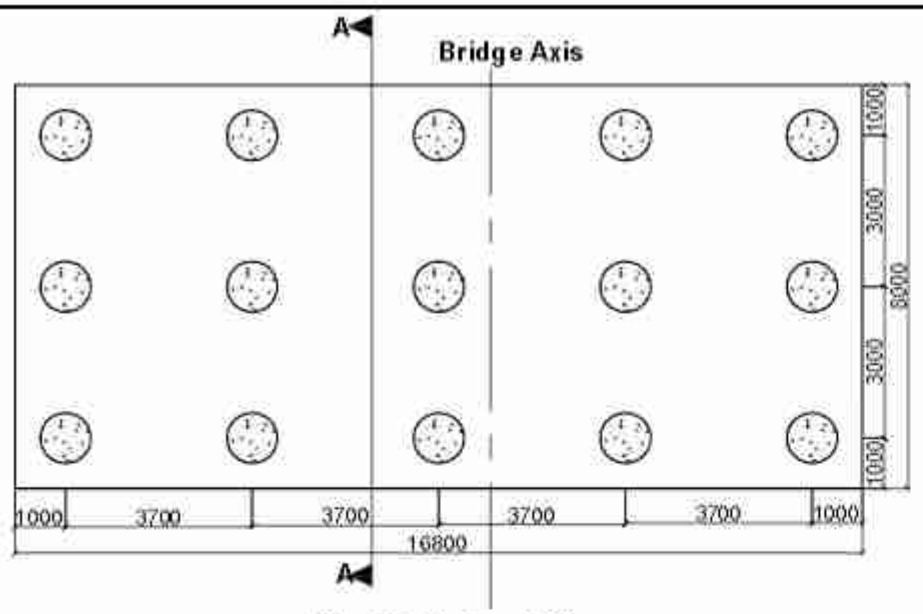

Plan Of Abutment Piles
Scale:- 1:150

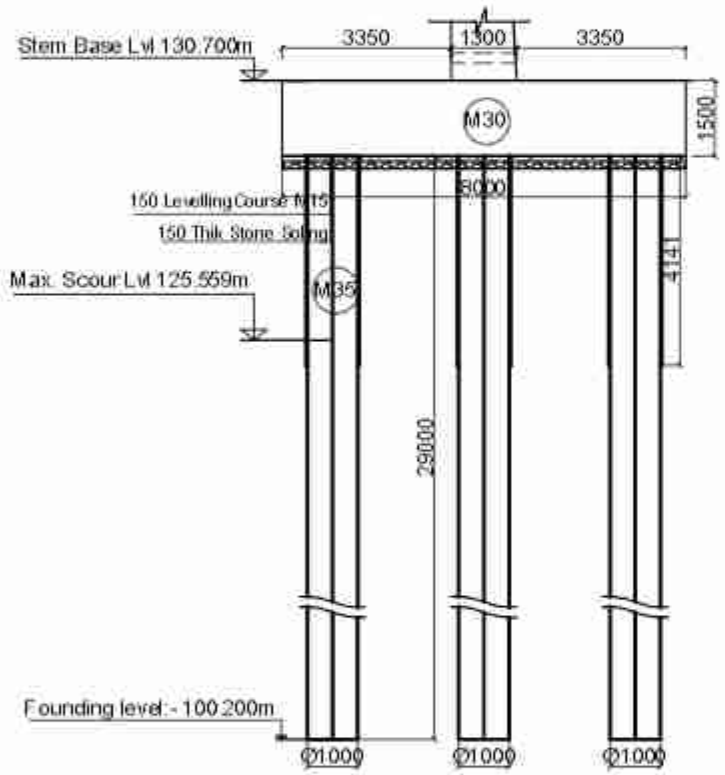

Piles Section at A-A
Scale:- 1:150

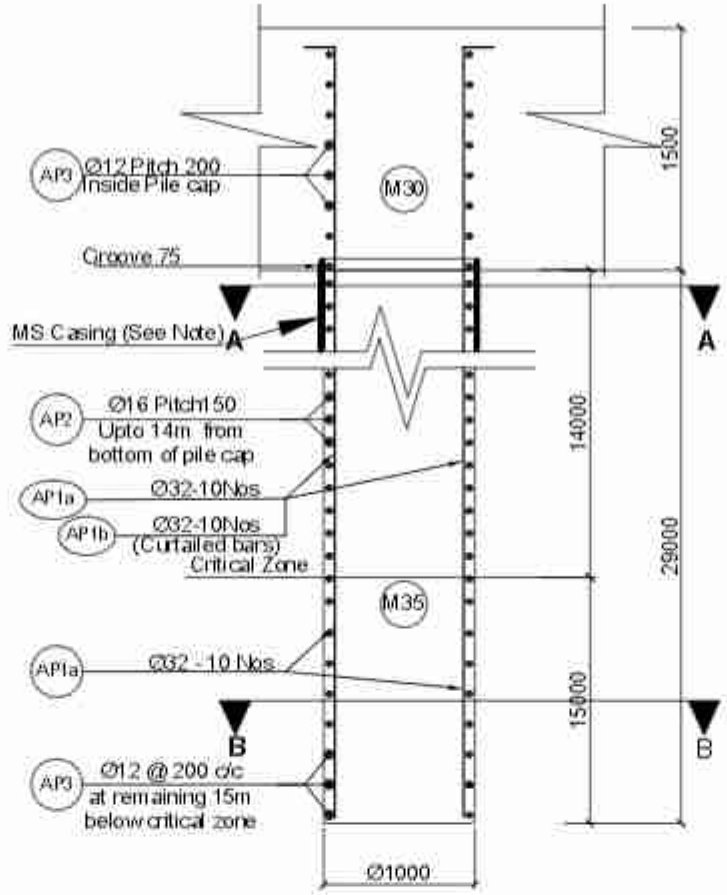

Reinforcement Details Of Pile
Scale:- 1:50

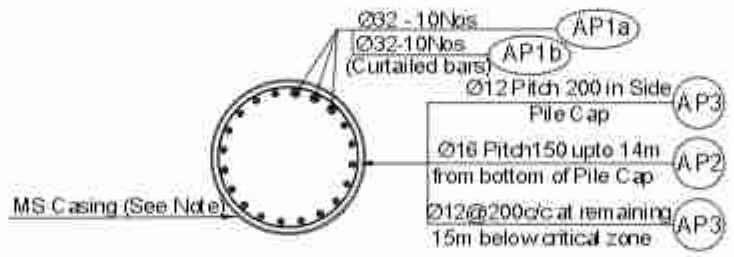

Section At A-A
Scale:- 1:50

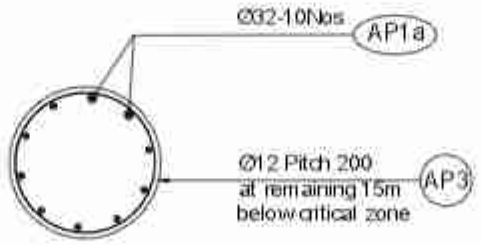

Section At B-B
Scale:- 1:50

Note on MS permanent casing on piles: In case piling works are done without temporary casing, the piles shall be lined with 6mm thick MS steel permanent casing up to 1.5 m or 0.5m below MSL whichever is larger (Subject to instruction and approval by the Engineer)

Location	Design Pile Length m	Design Working load on pile (non - seismic casse)kn	Allowable Bearing Capacity on pile (Scour case)kn	Allowable Bearing Capacity of the Pile (Non Scour case)kn
Abutment	29	1608	1942	2059
Pier	23.7	1227	2750	3618

BAR BENDING SCHEDULE OF ABUTMENT PILECAP

BAR ID	SHAPE OF BAR IN mm (NOT TO SCALE)	SPACING (MM)	Ø OF BARS (mm)	NO. OF BARS	LENGTH (m)	WEIGHT/LENGTH (kG/m)	TOTAL WEIGHT (kG)
APC1	900 7825 900		25	85	9.625	3.853	3152.537
APC2	900 7825 900		25	85	9.625	3.853	3152.537
APC3	900 16630 900		20	41	18.430	2.466	1863.501
APC4	900 16630 900		20	41	18.430	2.466	1863.501
APC5	1270 Curve length 251 Curve radius 40 Hook length 80		16	387	1.932	1.578	1180.099
		400 c/c Along axis			1000 c/c Across axis		
APC6	16650 7850		16	4	49.000	1.578	309.365
TOTAL IN PILE CAP OF ONE ABUTMENT							11521.532
TOTAL WEIGHT IN METRIC TON							11.522

BAR BENDING SCHEDULE OF ABUTMENT PILE

BAR ID	SHAPE OF BAR IN mm (NOT TO SCALE)	SPACING (MM)	Ø OF BARS (mm)	NO. OF BARS	LENGTH (m)	WEIGHT/LENGTH (kG/m)	TOTAL WEIGHT (kG)
AP1a	200 30290		32	10	30.490	6.313	1924.943
AP1b	200 15400 Curtailed bars		32	10	15.600	6.313	984.884
AP2	Dia-834, Pitch 150, 14m from bottom of pile cap		16	1	248.470	1.578	392.170
AP3	Dia-834, Pitch 200,200 below critical zone		12	1	220.940	0.888	196.154
TOTAL IN ONE PILE IN ONE ABUTMENT							3498.152
TOTAL IN FIFTEEN PILES OF ONE ABUTMENT (IN METRIC TON)							52.472

For Construction Methology and Sequence Please See General Notes.

Government of Nepal
Ministry of Physical Infrastructure and Transport
Department of Roads
Project Directorate Office (ADB)
SASEC Highway Improvement Project-
Project Preparatory Consultant (SHIP-PPC)
ADB Loan No: 3722-NEP

CONSULTANT: Soosung Engineering Co. Ltd, Korea in association with ERMC P (Ltd) and Tech Studio of Engineeering Nepal

IMPLEMENTING AGENCY: DOR, DCID

ROAD NAME: East West Highway (H01)

Butwal - Gorusinghe Section

SHEET TITLE: Reinforcement Details of Abutment Piles of **Kanchan Bridge** (46/H001/306_A)

SCALE: As Shown

	NAME	SIGNATURE	REV NO.	DESCRIPTION
Designed by:	Saroj Bhattarai			
Checked by:	P. Upadhyaya			
Approved by:	Dr. T.H.Choi			

DATE: November,2022
DWG.NO.: 306_Kanchan
SHEET NO.: 15/27

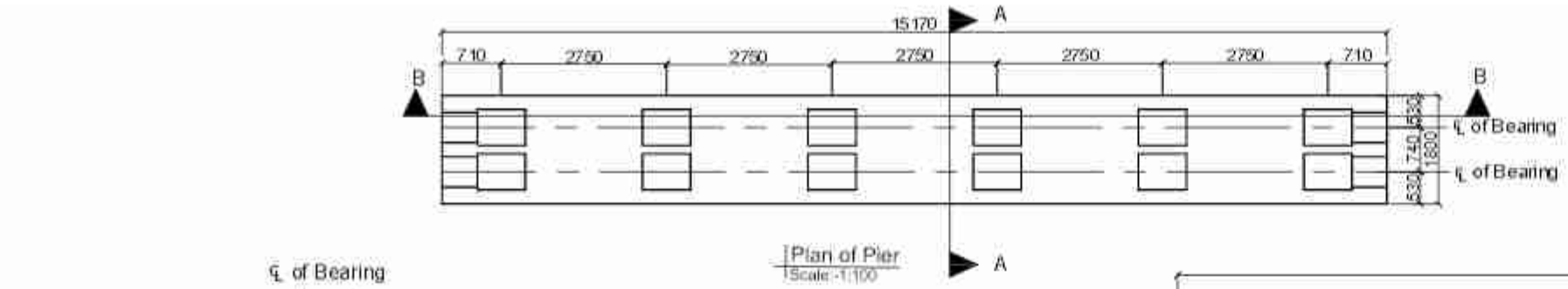

Plan of Pier
Scale :-1:100

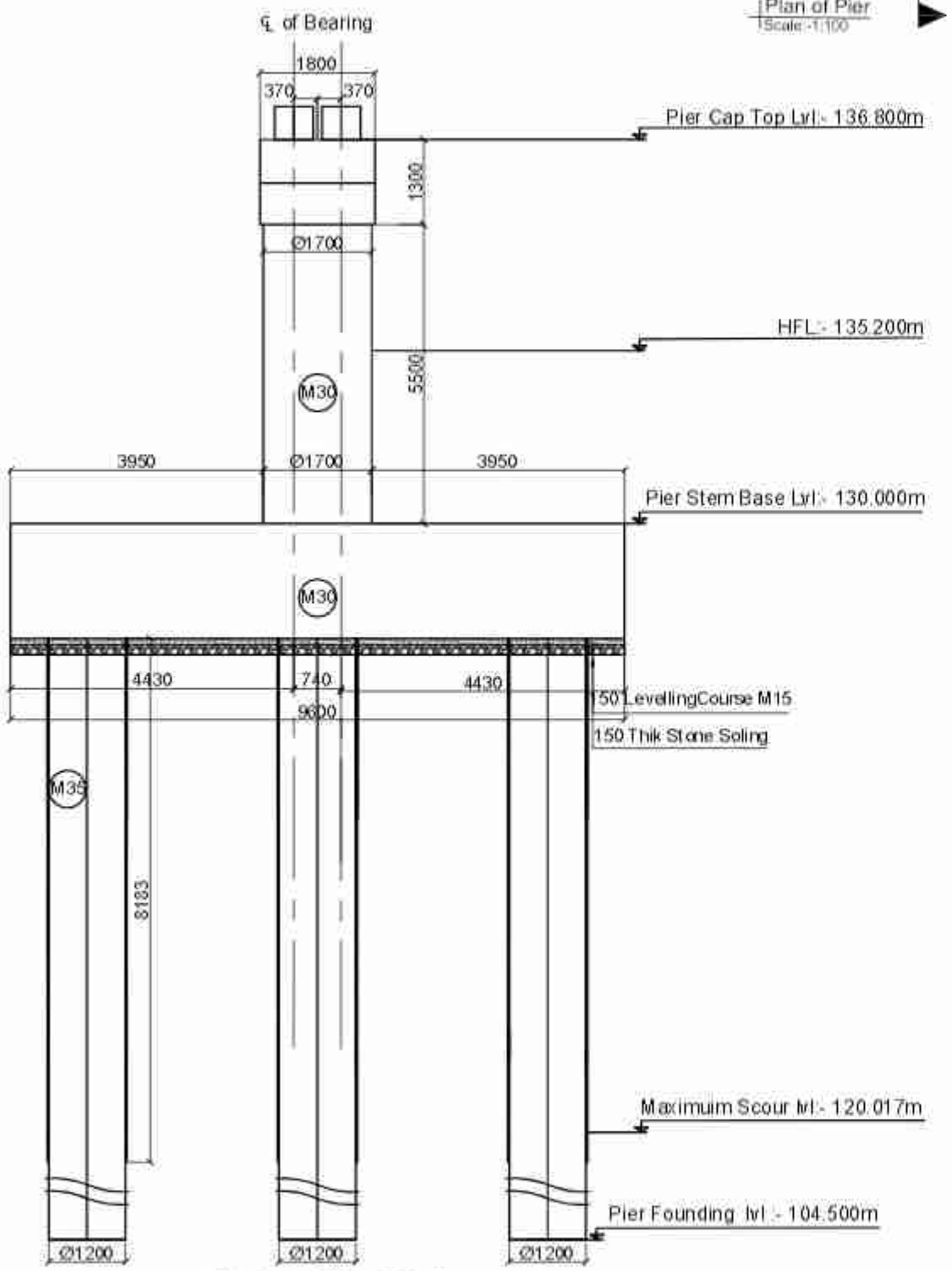

Section of Pier At (A-A)
Scale : 1:100

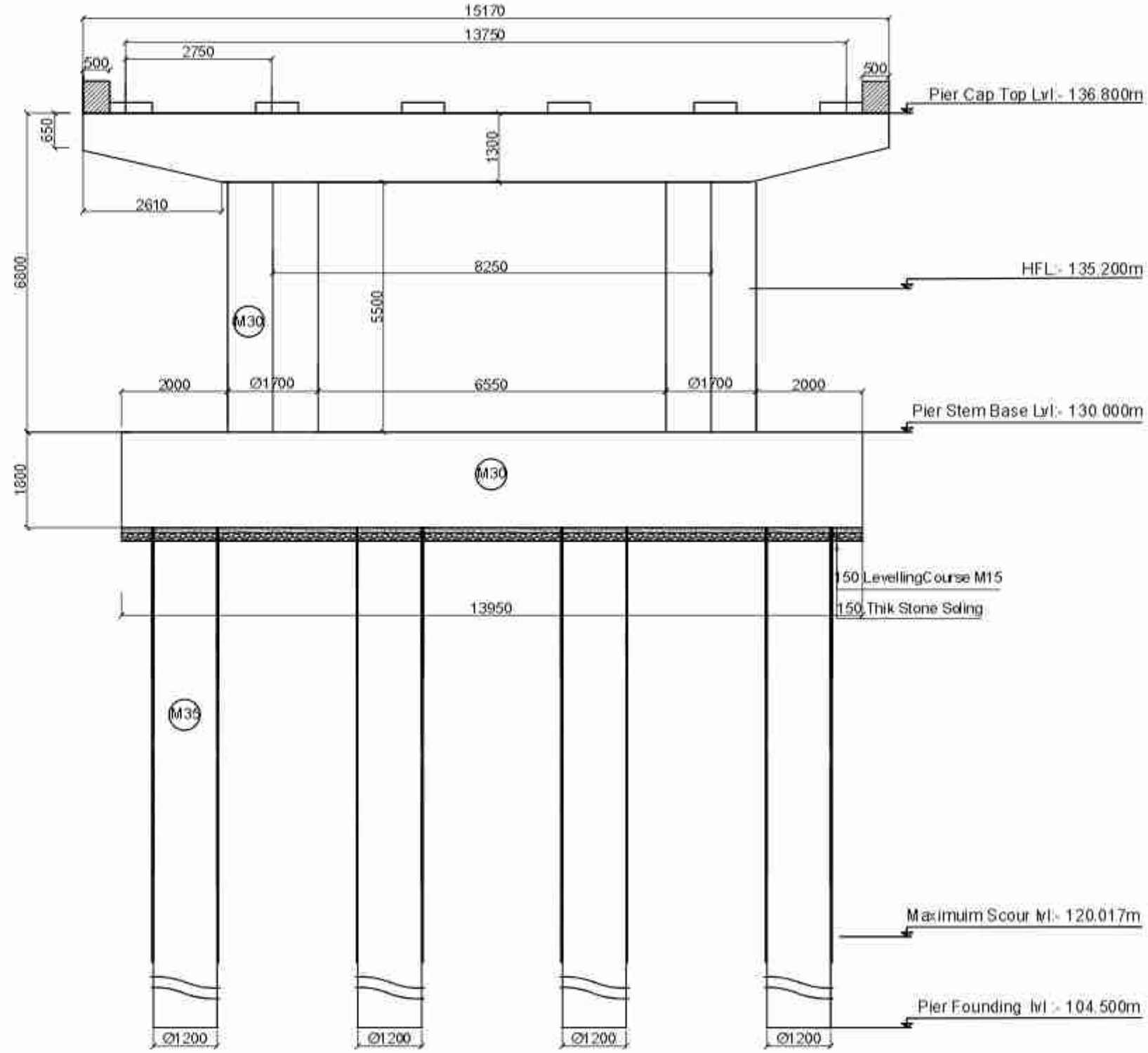

Section of Pier At (B-B)
Scale :- 1:100

Government of Nepal Ministry of Physical Infrastructure and Transport **Department of Roads** **Project Directorate Office (ADB)** **SASEC Highway Improvement Project-** **Project Preparatory Consultant (SHIP-PPC)** **ADB Loan No: 3722-NEP**	**CONSULTANT:** Soosung Engineering Co. Ltd, Korea in association with ERMC P (Ltd) and Tech Studio of Engineeering Nepal	**IMPLEMENTING AGENCY:** **DOR, DCID** **ROAD NAME:** **East West Highway (H01)** **Butwal - Gorusinghe Section**	**SHEET TITLE:** Detail of Pier Piles of **Kanchan Bridge** (46/H001/306_A)	**SCALE:** As Shown		NAME	SIGNATURE	REV NO.	DESCRIPTION	DATE: November,2022
					Designed by:	Saroj Bhattara				DWG.NO.: 306_kanchan
					Checked by:	P. Upadhyaya				
					Approved by:	Dr. T.H.Choi				SHEET NO.: 16/27

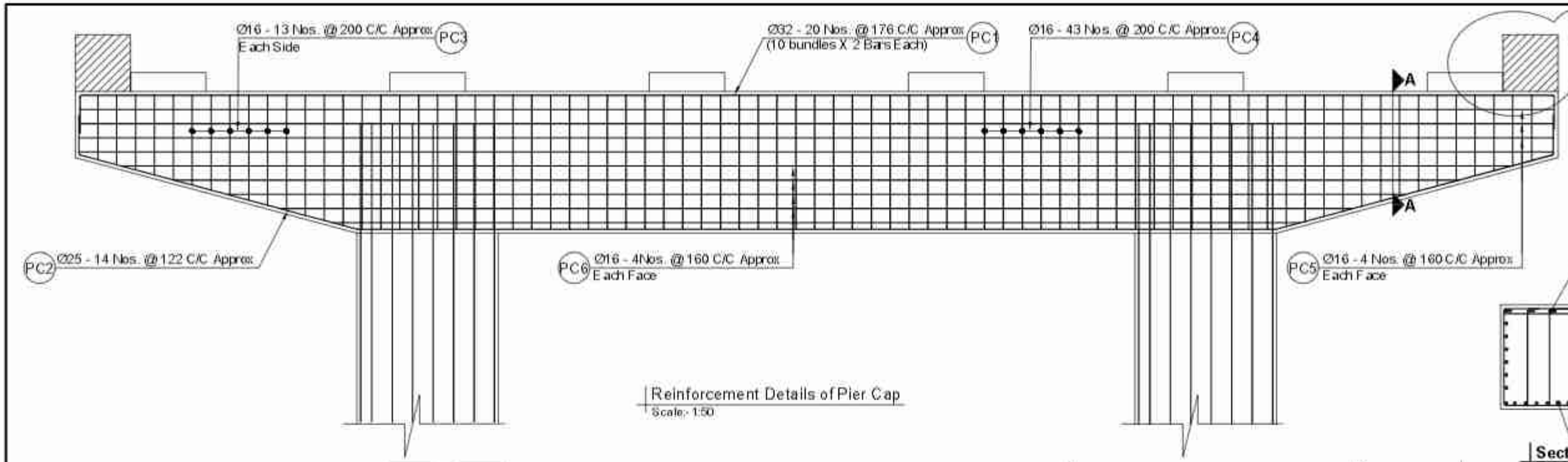

Reinforcement Details of Pier Cap
Scale:- 1:50

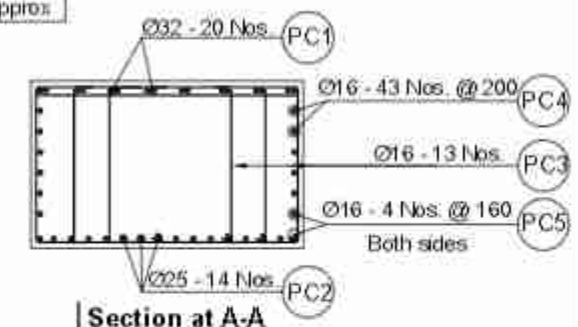

Section at A-A
Scale:- 1:50

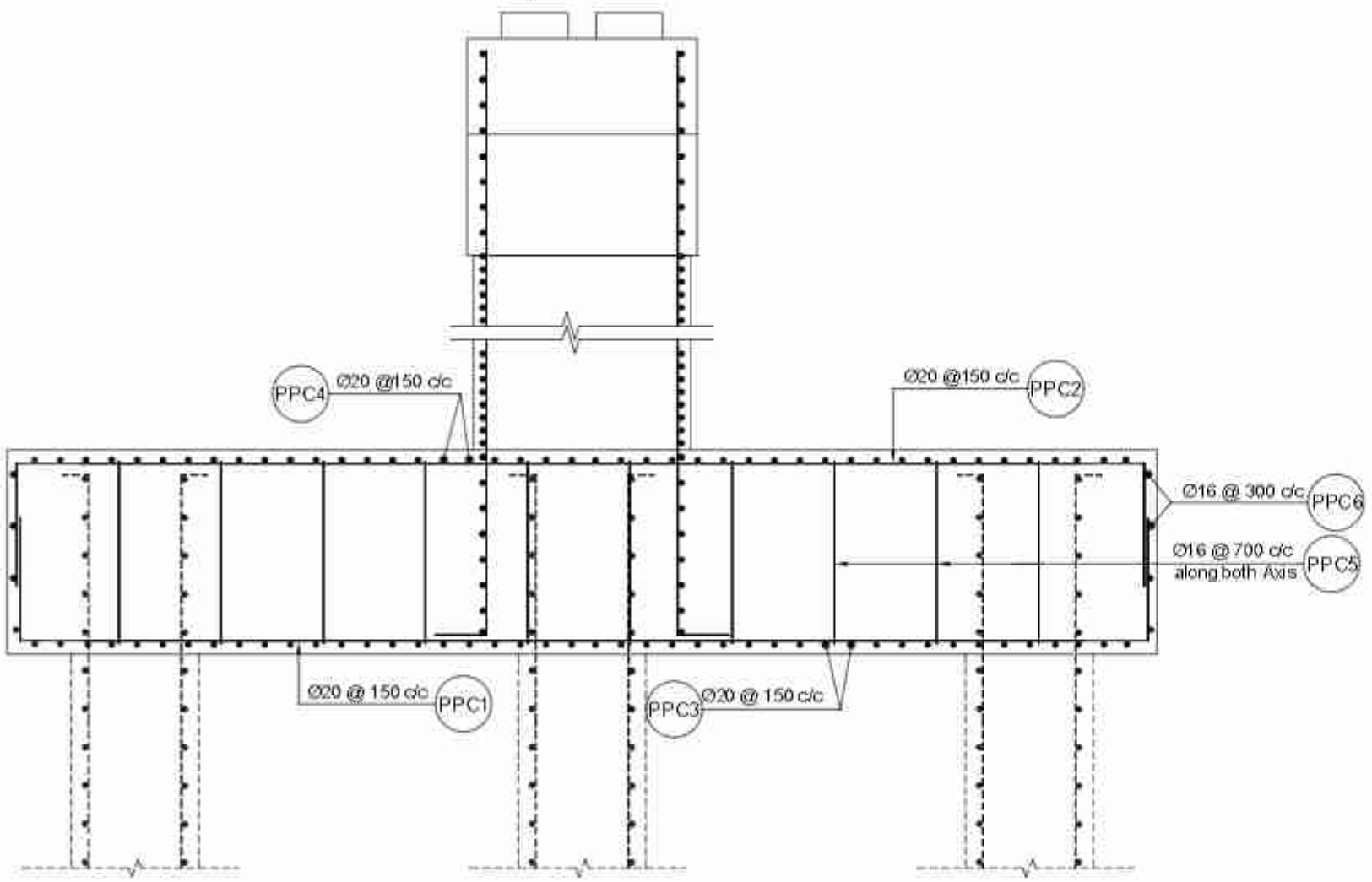

Reinforcement Details of Pier Pile Cap
Scale:- 1:50

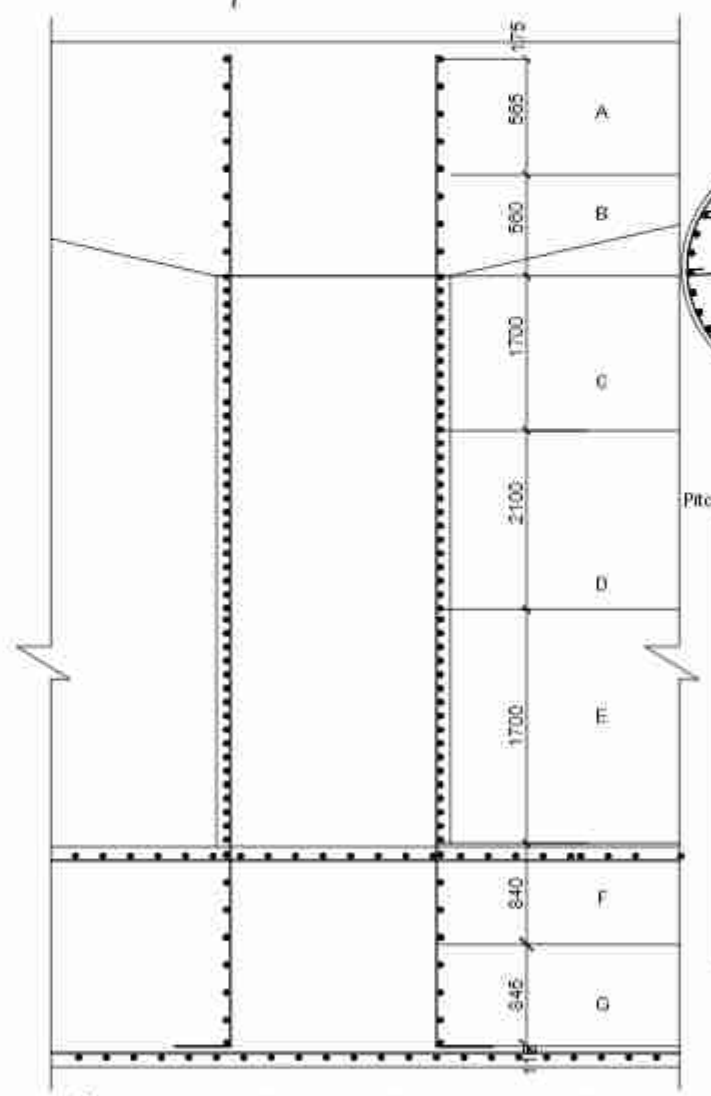

Pitch of Spiral / Transverse Reinforcement of Pier
Scale:- 1:50

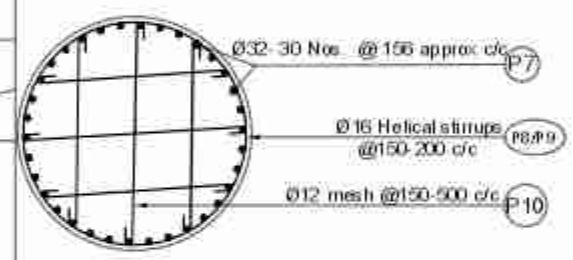

Cross Section of Pier Stem
Scale:- 1:50

Pitch /Spacing of Transverse Reinforcement

ZONE	BAR	PITCH	DIA
A	P9	200	16
B	P9	200	16
C	P8	150	16
	P 10	150	12
D	P9	200	16
	P 10	500	12
E	P8	150	16
	P 10	150	12
F	P9	200	16
G	P9	200	16

Government of Nepal Ministry of Physical Infrastructure and Transport **Department of Roads** **Project Directorate Office (ADB)** **SASEC Highway Improvement Project-** **Project Preparatory Consultant (SHIP-PPC)** **ADB Loan No: 3722-NEP**	**CONSULTANT:** Soosung Engineering Co. Ltd, Korea in association with ERMC P (Ltd) and Tech Studio of Engineering Nepal	**IMPLEMENTING AGENCY:** **DOR, DCID** **ROAD NAME:** **East West Highway (H01)** **Butwal - Gorusinghe Section**	**SHEET TITLE:** Reinforcement Details of Pier Piles of **Kanchan Bridge** (46/H001/306_A)	**SCALE:** As Shown		**NAME**	**SIGNATURE**	**REV NO.**	**DESCRIPTION**	**DATE:** November,2022
					Designed by:	Saroj Bhattara				DWG.NO.: 306_kanchan
					Checked by:	P. Upadhyaya				
					Approved by:	Dr. T.H.Choi				SHEET NO.: 17/27

BAR BENDING SCHEDULE FOR PIER CAP

BAR ID	SHAPE OF BAR IN mm (NOT TO SCALE)	SPACING (mm)	Ø OF BARS (mm)	NO. OF BARS	LENGTH (m)	WEIGHT/LENGTH (Kg/m)	TOTAL WEIGHT (Kg)
PC1	13540; 550; 10 bundles x 2 bars each	176	32	10	14.640	6.313	924.276
			32	10	14.640	6.313	924.276
PC2	560; 2615; 9800	122	25	14	16.150	3.853	871.247
PC3	3x650; 6 legs H varies 485-1135; 3 overlapping rings of length 650 each	200	16	26	9.360	1.578	384.105
PC4	3x650; 1135; 6 legs Hooks 100; 3 overlapping rings of length 650 each	200	16	43	11.310	1.578	767.594
PC5	13585; 1635; Hooks 100	160	16	4	30.640	1.578	193.441
PC6	L varies 13585-9800; 1635; Hooks 100	160	16	4	average 26.860	1.578	169.577
TOTAL IN PIER CAP							4234.515
TOTAL WEIGHT (IN METRIC TON)							4.235

BAR BENDING SCHEDULE FOR PIER PILE CAP

BAR ID	SHAPE OF BAR IN mm (NOT TO SCALE)	SPACING (mm)	Ø OF BARS (mm)	NO. OF BARS	LENGTH (m)	WEIGHT/LENGTH (Kg/m)	TOTAL WEIGHT (Kg)
PPC1	1080; 13780; 1080	150	20	64	15.940	2.466	2515.874
PPC2	1080; 13780; 1080	150	20	64	15.940	2.466	2515.874
PPC3	1080; 9430; 1080	150	20	93	11.590	2.466	2658.196
PPC4	1080; 9430; 1080	150	20	93	11.590	2.466	2658.196
PPC5	1570; Curve length = 251; Curve radius = 40; Hook length = 80	800	16	315	2.232	1.578	1109.699
		700 C/C along/Across Axis					
PPC6	9450; 13800; Peripheral Reinforcement	300	16	5	46.500	1.578	366.964
TOTAL IN PILE OF PIER PILE CAP							11824.802
TOTAL WEIGHT (IN METRIC TON)							11.825

BAR BENDING SCHEDULE FOR PIER STEM

BAR ID	SHAPE OF BAR IN mm (NOT TO SCALE)	SPACING (mm)	Ø OF BARS (mm)	NO. OF BARS	LENGTH (m)	WEIGHT/LENGTH (Kg/m)	TOTAL WEIGHT (Kg)
P7	400; 8360; 400; 156 c/c Approx	156	32	30	9.160	6.313	1734.911
P8	Dia-1534, Pitch-150 At Critical zone		16	1	110.360	1.578	174.186
P9	Dia-1534, Pitch-200 At Non-Critical zone		16	1	119.910	1.578	189.259
P10	150 C/C at critical zone 500 C/C at non-critical zone	125.500	12	28	8.820	0.888	219.255
TOTAL IN PILE OF PIER STEM							2317.611
TOTAL (IN METRIC TON)							2.318

Government of Nepal Ministry of Physical Infrastructure and Transport **Department of Roads** **Project Directorate Office (ADB)** **SASEC Highway Improvement Project-** **Project Preparatory Consultant (SHIP-PPC)** **ADB Loan No: 3722-NEP**	**CONSULTANT:** Soosung Engineering Co. Ltd, Korea in association with ERMC P. (Ltd) and ARK-Tech Studio of Engineeering Nepal	**IMPLEMENTING AGENCY:** **DOR, DCID** **ROAD NAME:** **East West Highway (H01)** **Butwal - Gorusinghe Section**	**SHEET TITLE:** Bar Bending schedule of Pile & pier Cap **Kanchan Bridge** (46/H001/306_A)	**SCALE:** As Shown		NAME	SIGNATURE	REV NO.	DESCRIPTION	DATE: November,2022
					Designed by:	Saroj Bhattarai				DWG.NO.: 306_kanchan
					Checked by:	P. Upadhyaya				
					Approved by:	Dr. T.H.Choi				SHEET NO.: 18/27

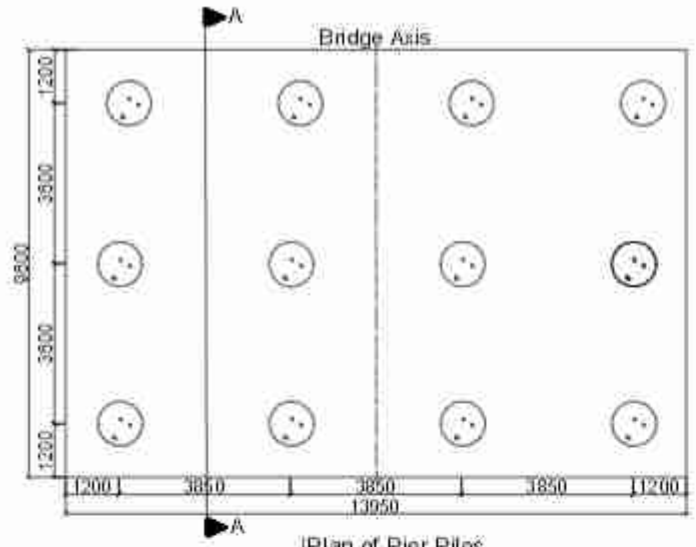

Plan of Pier Piles
Scale : 1:150

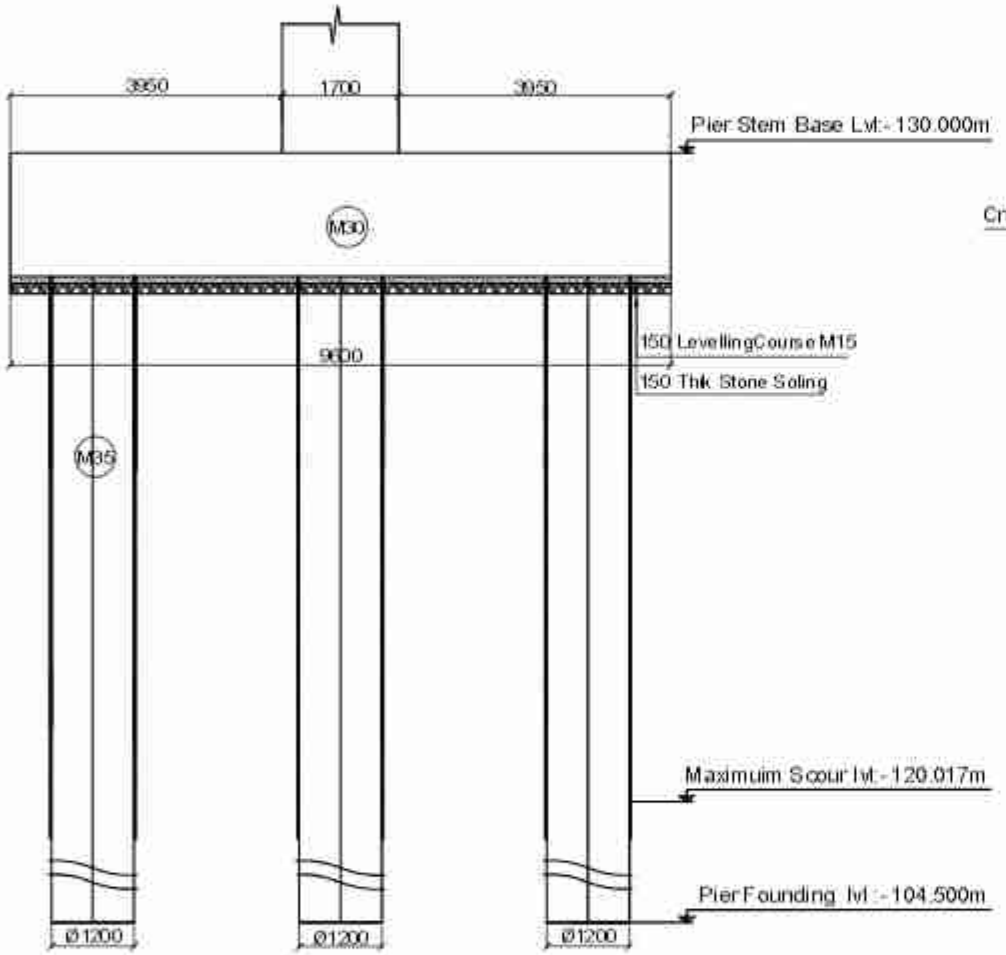

Section of Pier At (A-A)
Scale : 1:100

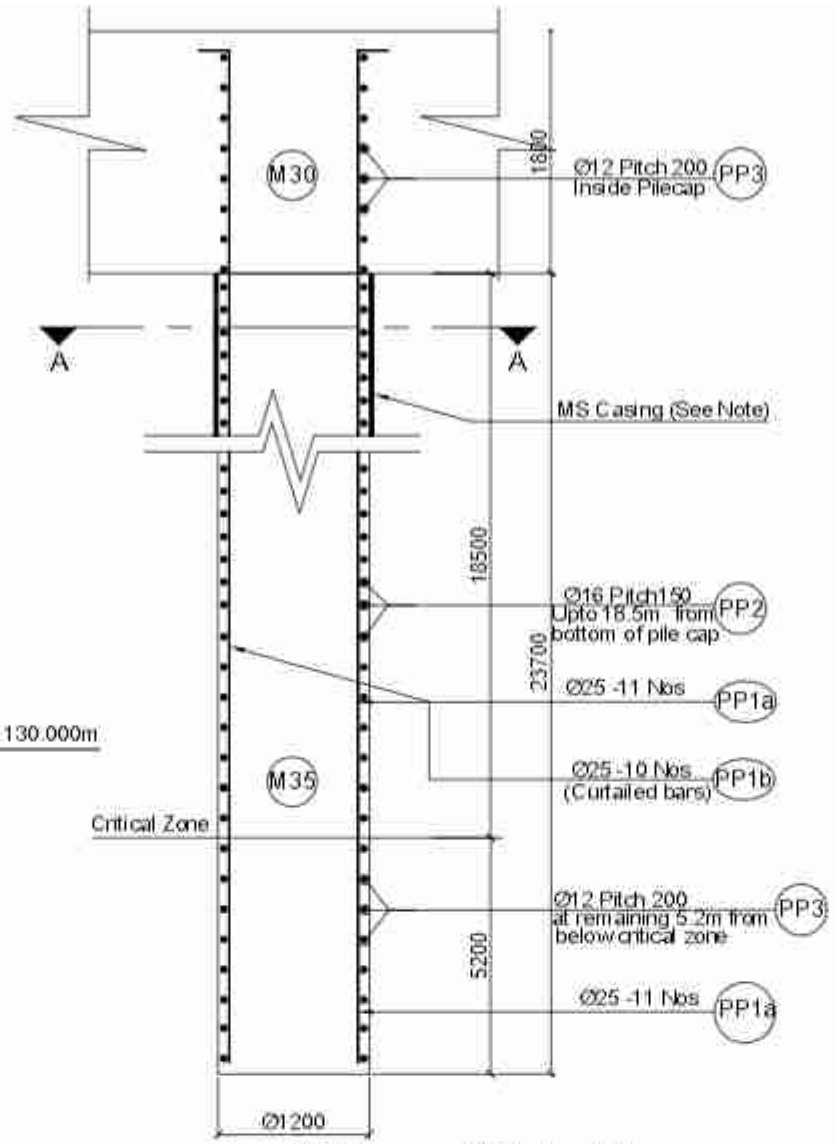

Reinforcement Details of Pile
Scale : 1:50

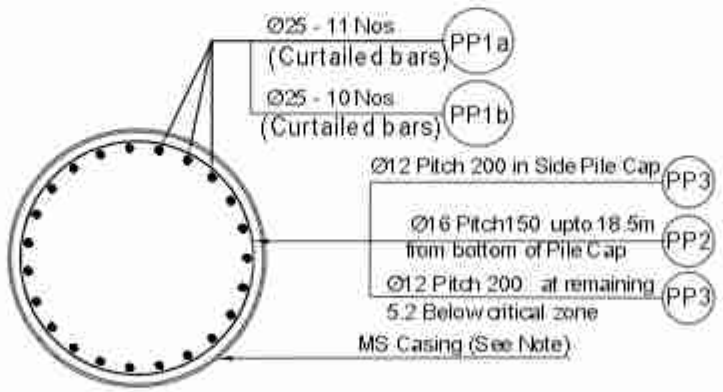

Section at A-A
Scale : 1:30

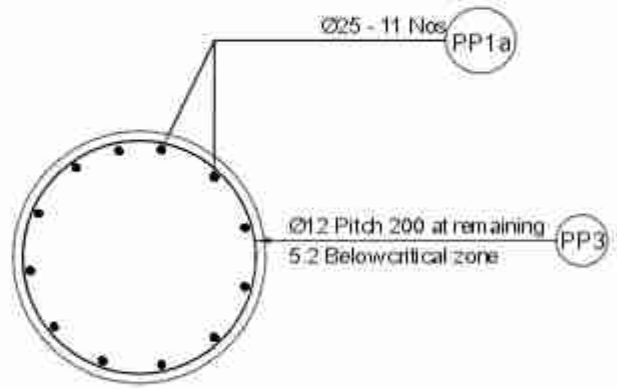

Section at B-B
Scale : 1:30

BAR BENDING SCHEDULE FOR PIER PILES

BAR ID	SHAPE OF BAR IN mm (NOT TO SCALE)	SPACING (mm)	Ø OF BARS (mm)	NO. OF BARS	LENGTH (m)	WEIGHT/LENGTH (kg/m)	TOTAL WEIGHT (kg)
PP1a	200 Full length bars 25300		25	11	25.500	3.853	1080.870
PP1b	200 Curtailed bars 20200		25	10	20.400	3.853	786.087
PP2	Dia 10@4,Pitch 150 18.5 m from bottom of pile cap	150	16	1	404.800	1.578	638.912
PP3	Dia 10@4,Pitch 200 Inside pile cap 200 below Critical Zone	200	12	1	114.150	0.888	101.344
TOTAL IN ONE PILE IN 1 PIER							2607.213
TOTAL (IN METRIC TON)							2.607
TOTAL FOR 12 PILES IN ONE PIER (IN METRIC TON)							31.29

Note on MS permanent casing on piles: In case piling works are done without temporary casing, the piles shall be lined with 6mm thick MS steel permanent casing up to 1.5 m or 0.5m below MSL whichever is larger (Subject to instruction and approval by the Engineer)

Location	Design Pile Length m	Design Working load on pile (non - seismic case)kn	Allowable Bearing Capacity on pile (Scour case)kn	Allowable Bearing Capacity of the Pile (Non Scour case)kn
Abutment	29	1608	1942	2059
Pier	23.7	1227	2750	3618

For Construction Methology and Sequence Please See General Notes.

Government of Nepal Ministry of Physical Infrastructure and Transport **Department of Roads** **Project Directorate Office (ADB)** **SASEC Highway Improvement Project-** **Project Preparatory Consultant (SHIP-PPC)** **ADB Loan No: 3722-NEP**	**CONSULTANT:** Soosung Engineering Co. Ltd, Korea in association with ERMC P (Ltd) and Tech Studio of Engineeering Nepal	**IMPLEMENTING AGENCY:** **DOR, DCID** **ROAD NAME:** **East West Highway (H01)** **Butwal - Gorusinghe Section**	**SHEET TITLE:** Reinforcement Details of pier piles **Kanchan Bridge** (46/H001/306_A)	**SCALE:** As Shown		**NAME**	**SIGNATURE**	**REV NO.**	**DESCRIPTION**	**DATE:** November,2022
					Designed by:	Saroj Bhattarai				
					Checked by:	P. Upadhyaya				**DWG.NO.:** 306_kanchan
					Approved by:	Dr. T.H.Choi				**SHEET NO.:** 19/27

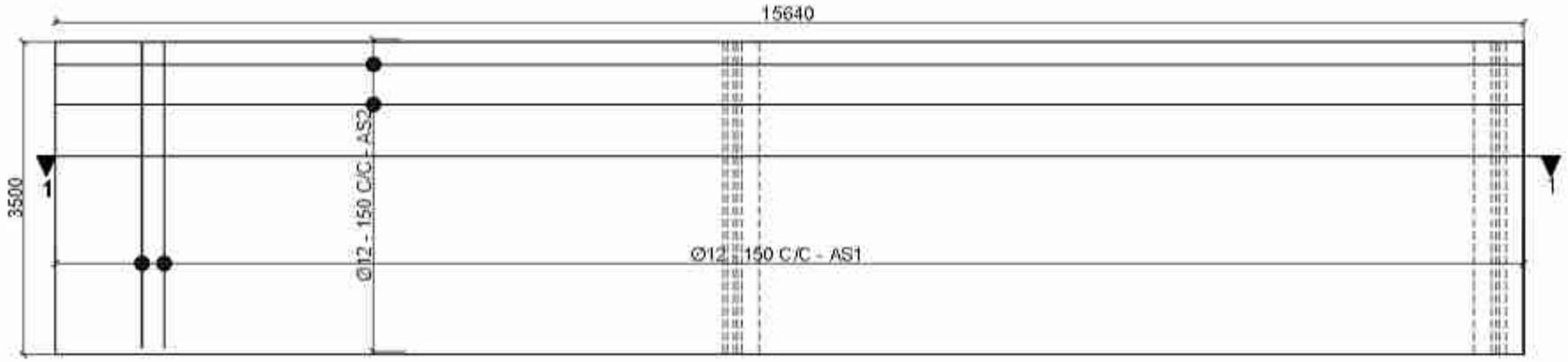

Plan of Reinforcement Details of Approach Slab
Scale:-1:75

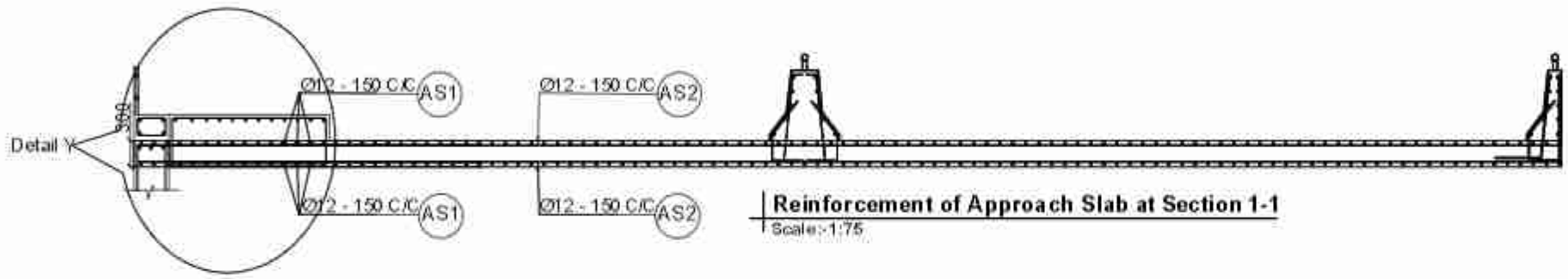

Reinforcement of Approach Slab at Section 1-1
Scale:-1:75

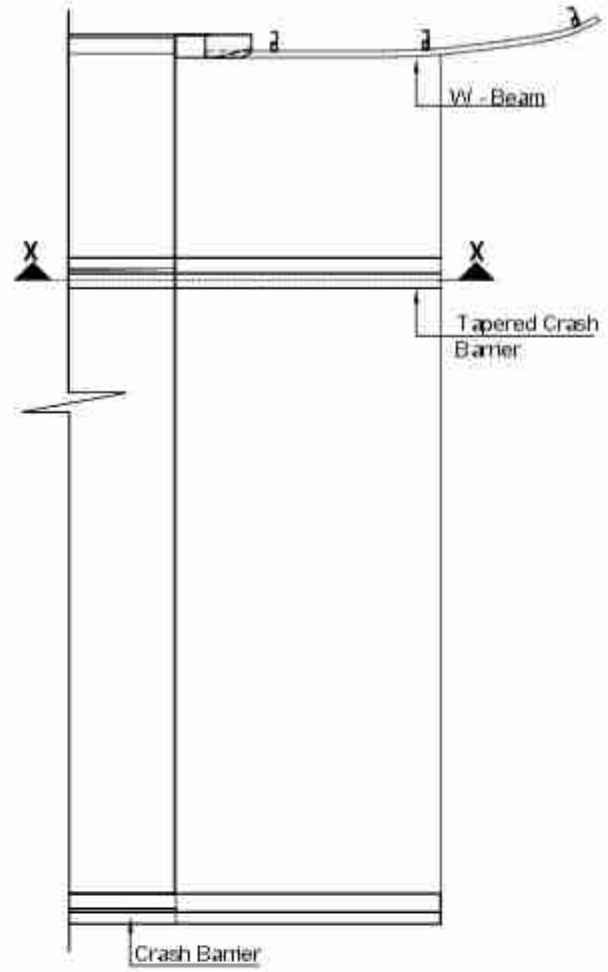

Plan of Approach Slab
Not to Scale

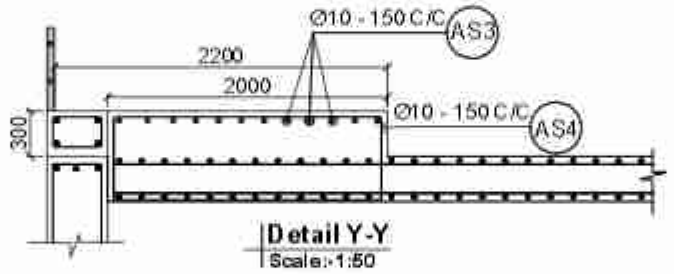

Detail Y-Y
Scale:-1:50

BAR BENDING SCHEDULE OF APPROACH SLAB							
BAR ID.	SHAPE OF BAR (mm) (NOT TO SCALE)	SPACING (mm)	DIA OF BARS (mm)	NO. OF BARS	LENGTH (m)	WEIGHT/LENGTH (Kg/m)	TOTAL WEIGHT (Kg)
AS1	3400	-	12	210	3.400	0.888	633.901
AS2	15550	-	12	48	15.550	0.888	662.666
AS3	3400		10	15	3.400	0.617	31.443
AS4	1920 / 520		10	16	5.000	0.617	55.489
TOTAL ONE APPROACH SLAB							1383.499
TOTAL WEIGHT IN METRIC TON							1.383

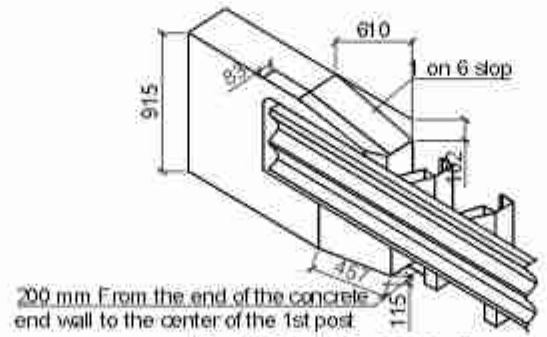

End Block Part Details
Scale:-1:50

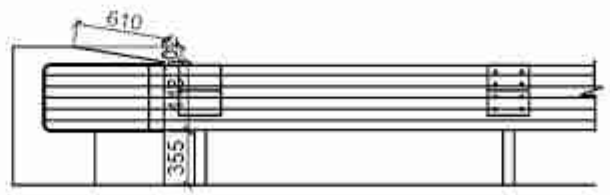

Eleavation
Scale:-1:50

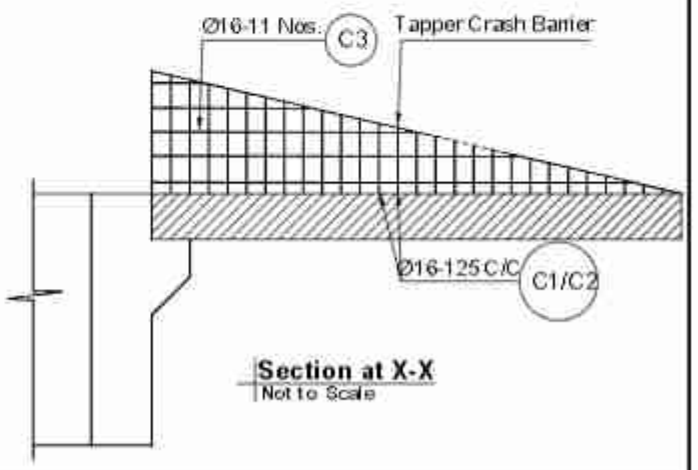

Section at X-X
Not to Scale

Government of Nepal Ministry of Physical Infrastructure and Transport **Department of Roads** **Project Directorate Office (ADB)** **SASEC Highway Improvement Project-** **Project Preparatory Consultant (SHIP-PPC)** **ADB Loan No: 3722-NEP**	**CONSULTANT:** Soosung Engineering Co. Ltd, Korea in association with ERMC P (Ltd) and Tech Studio of Engineeering Nepal	**IMPLEMENTING AGENCY:** **DOR, DCID**	**SHEET TITLE:**	**SCALE:**		NAME	SIGNATURE	REV NO.	DESCRIPTION	DATE: November,2022
		ROAD NAME: **East West Highway (H01)**	Reinforcement Details of Approach Slab of **Kanchan Bridge** (46/H001/306_A)	As Shown	Designed by:	Saroj Bhattarai				DWG.NO.: 306_Kanchan
					Checked by:	P. Upadhyaya				
		Butwal - Gorusinghe Section			Approved by:	Dr. T.H.Choi				SHEET NO.: 20/27

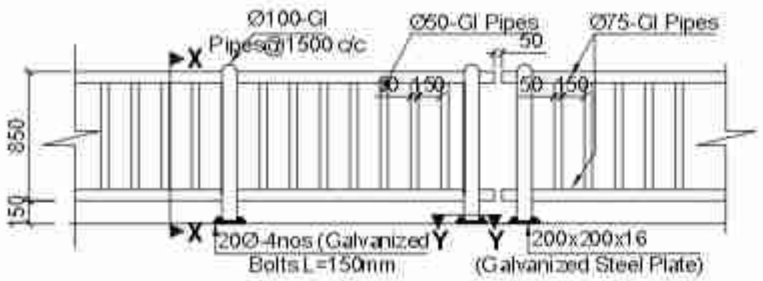

Railing Post Details
Scale:- 1:50

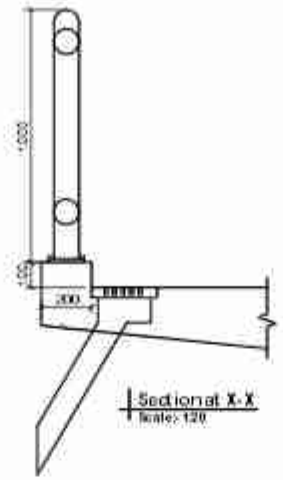

Section at X-X
Scale:- 1:20

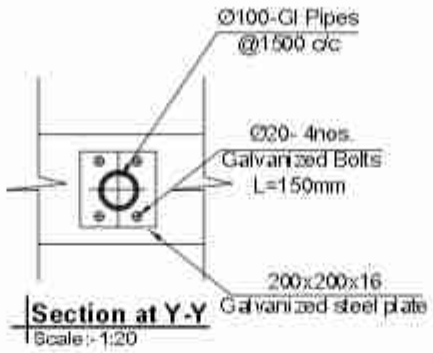

Section at Y-Y
Scale:- 1:20

BAR BENDING SCHEDULE OF CENTRAL CRASH BARRIER							
BAR ID	SHAPE OF BAR IN mm (NOT TO SCALE)	SPACING (MM)	Ø OF BARS (mm)	NO. OF BARS	LENGTH (m)	WEIGHT/LENGTH (kG/m)	TOTAL WEIGHT (kG)
C1	575, 250, 555	125	16	8	2.210	1.578	27.905
C2	915, 730	125	16	16	1.580	1.578	39.900
C3	960		16	11	0.960	1.578	16.667
TOTAL FOR 1M							84.473
TOTAL FOR 1.0M IN MT							0.084

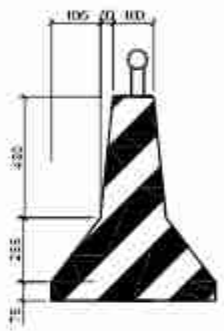

Painting Work on The Bridge Deck
Scale:-1:20

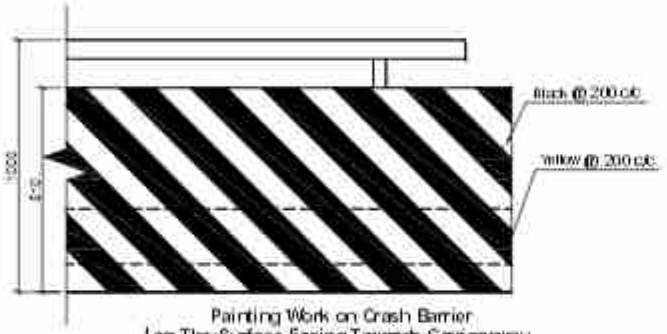

Painting Work on Crash Barrier on The Surface Facing Towards Carriageway
Scale:-1:20

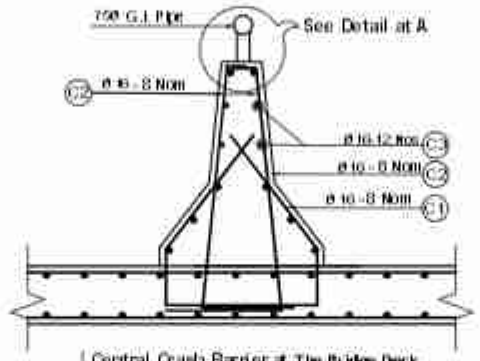

Central Crash Barrier at The Bridge Deck
Scale:-1:20

Painting Work on Tapper Crash Barrier
Scale:-1:20

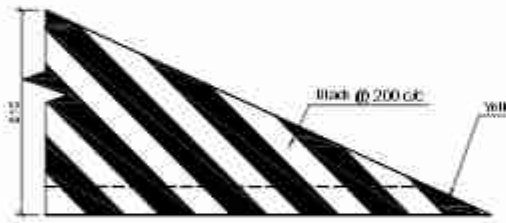

Painting Work on Crash Barrier on The Surface Facing Towards Carriageway
Scale:-1:20

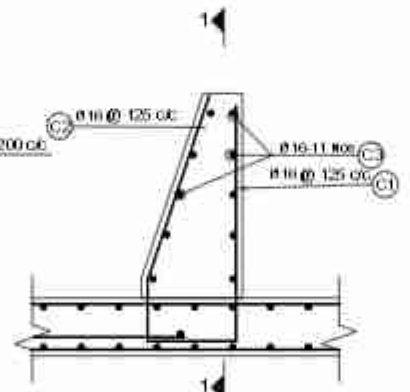

Crash Barrier Detail at The Tapered End
Scale:-1:20

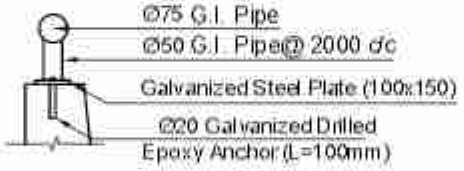

Details at- A-A
Scale:-1:20

BAR BENDING SCHEDULE OF CRASH BARRIER							
BAR ID	SHAPE OF BAR IN mm (NOT TO SCALE)	SPACING (MM)	Ø OF BARS (mm)	NO. OF BARS	LENGTH (m)	WEIGHT/LENGTH (kG/m)	TOTAL WEIGHT (kG)
C1	575, 225, 304, 928	150	16	8	2.030	1.578	25.632
C2	915, 600	150	16	8	1.415	1.578	17.867
C3	960		16	11	0.960	1.578	16.667
TOTAL FOR 1M							60.166
TOTAL FOR 1.0M IN MT							0.060

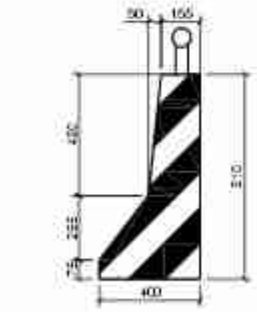

Painting Work on Crash Barrier
Scale:-1:20

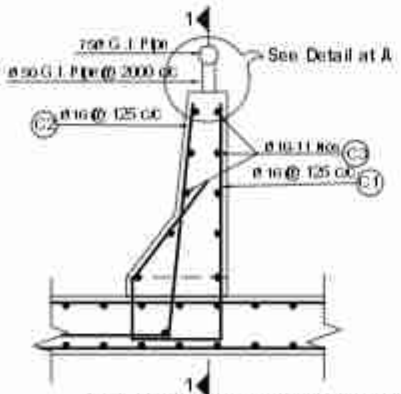

Crash Barrier Detail at The Bridge Deck
Scale:-1:20

NOTES:
The crash barrier shall be sloped at both ends of the bridge as shown and the reinforcement shall be adjusted according to the slope.

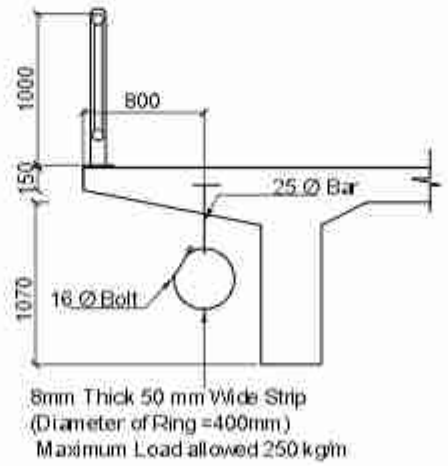

8mm Thick 50 mm Wide Strip
(Diameter of Ring =400mm)
Maximum Load allowed 250 kg/m

Utility hanger Detail
Scale:-1:50

Government of Nepal Ministry of Physical Infrastructure and Transport **Department of Roads** **Project Directorate Office (ADB)** **SASEC Highway Improvement Project-** **Project Preparatory Consultant (SHIP-PPC)** **ADB Loan No: 3722-NEP**	**CONSULTANT:** Soosung Engineering Co. Ltd, Korea in association with ERMC P (Ltd) and ZONE-Tech Studio of Engineeering Nepal	**IMPLEMENTING AGENCY:** **DOR, DCID** **ROAD NAME:** **East West Highway (H01)** **Butwal - Gorusinghe Section**	**SHEET TITLE:** Miscellaneous Details - 1 of **Kanchan Bridge** (46/-I001/306_A)	**SCALE:** As Shown		NAME	SIGNATURE	REV NO.	DESCRIPTION	DATE: November,2022
					Designed by:	Saroj Bhattarai				DWG.NO.: 306_Kanchan
					Checked by:	P. Upadhyaya				
					Approved by:	Dr. T.H.Choi				SHEET NO.: 21/27

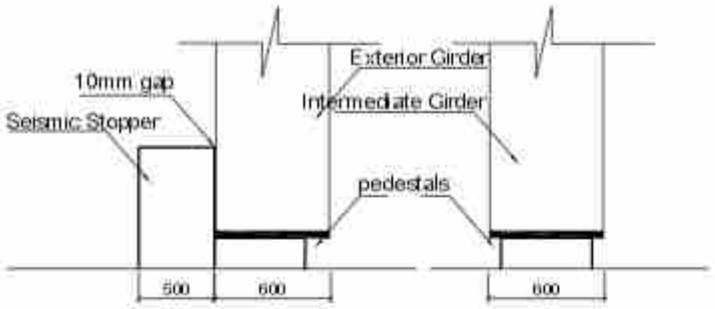

Abutment Cap With Stopper
Scale :-1:50

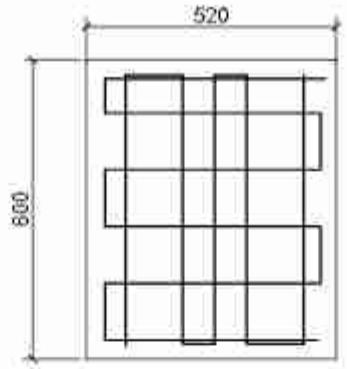

Pedestal Plan
Scale :-1:20

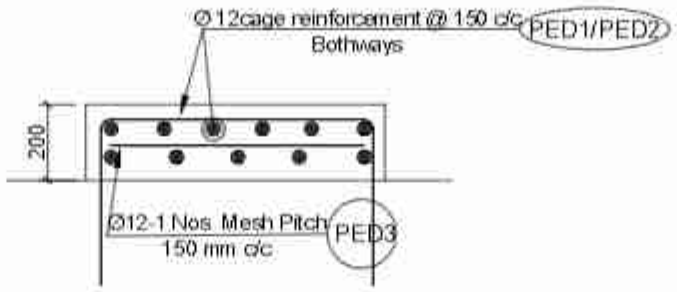

Pedestal Section
Scale:-1:20

BAR BENDING SCHEDULE OF PEDESTAL							
BAR ID	SHAPE OF BAR in mm (NOT TO SCALE)	SPACING (MM)	Ø OF BARS (mm)	NO. OF BARS	LENGTH (m)	WEIGHT/LENGTH (kG/m)	TOTAL WEIGHT (kG)
PED1	520 / 680 / 200		12	4	2.280	0.888	8.097
PED2	440 / 680 / 200		12	5	2.200	0.888	9.706
PED3	500 / 420 / Pitch 150 bothway, 1 layer		12	1	4.000	0.888	4.084
TOTAL WEIGHT IN KG							21.947
TOTAL WEIGHT IN MT							0.022

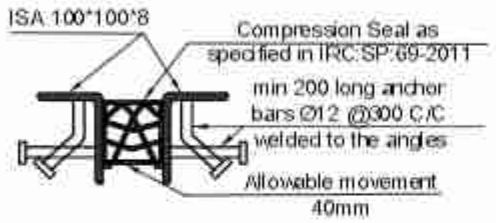

Compression seal type Expansion joints
Scale :-1:5

NOTE
To match the height of ballast wall, the pedestal thickness shall be suitably modified.

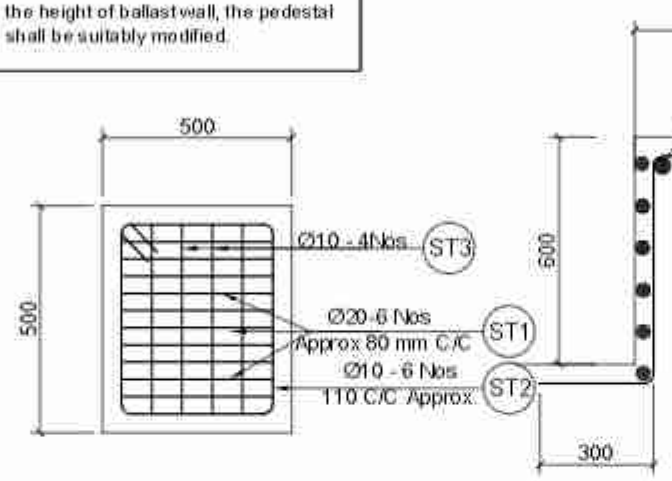

Stoppers Plan
Scale :-1:20

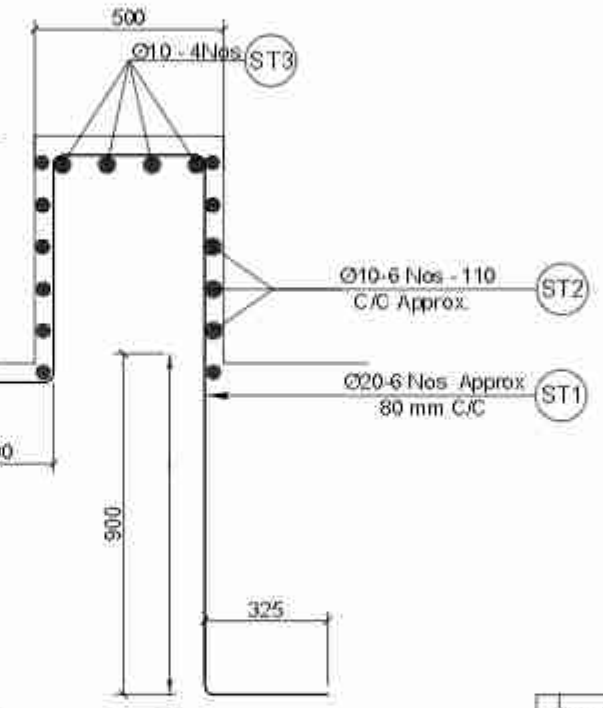

Stoppers Details
Scale :-1:20

BAR BENDING SCHEDULE OF STOPPER							
BAR ID	SHAPE OF BAR in mm (NOT TO SCALE)	SPACING (MM)	Ø OF BARS (mm)	NO. OF BARS	LENGTH (m)	WEIGHT/LENGTH (kG/m)	TOTAL WEIGHT (kG)
ST1	400 / 600 / 1500 / 300 / 300		20	6	3.100	2.466	45.871
ST2	620 / 100 / 400		10	6	1.840	0.617	6.807
ST3	400		10	4	0.400	0.617	0.986
TOTAL WEIGHT IN KG							53.664
TOTAL WEIGHT IN MT							0.054

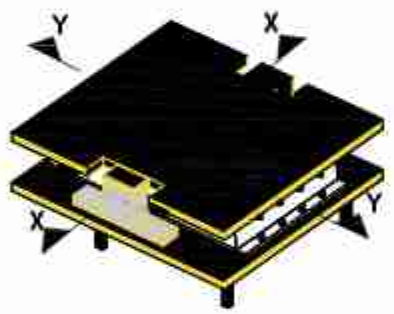

Elastrometric Bearing
(partially free at longitudal direction
Fixed at Transverse direction)

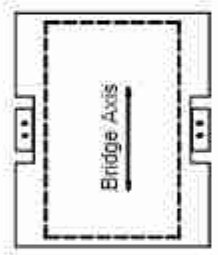

Elastomatric Bearing
Scale:-1:25

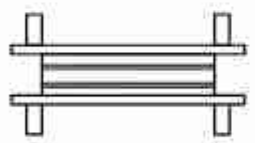

Section Y-Y
Scale:-1:25

Section X-X
Scale:-1:25

Notes on Elastomeric Bearings
The dimensions and properties of the bearings shown are tentative, based on IRC:83-2018, Part II, Table B2. The actual design shall be carried out by the manufacturer on the basis of provided load & deformation data. The effective stiffness shall not exceed the shown value.

Lateral stiffness corresponding to overall area and total thickness of elastomer = 2286 N/mm

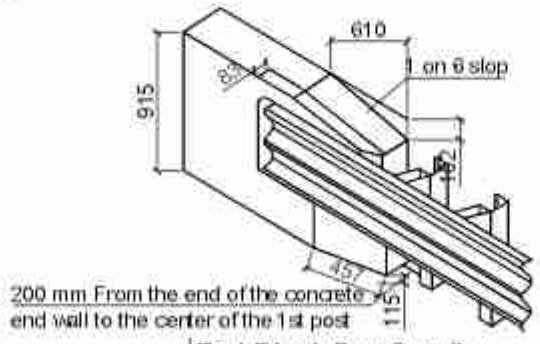

End Block Part Details
Scale:-1:50

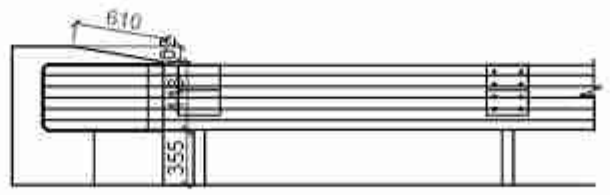

Eleavation
Scale:-1:50

Design Data for Bearings (Elastomeric Bearing) **All Loads Unfactored**

Maximum permanent and superimposed dead loads	482.4 kN
Maximum load from surfacing (wearing course)	30.7 kN
RCC URBAN variable lanes	22m / Info / 62
Maximum live load reaction (including impact)	550.3 kN
Maximum horizontal seismic force	87 kN
Maximum braking force	88.6 kN
Total Maximum elongation of the deck	8 mm
Maximum Rotation due to dead load _	0.0023 rad
Maximum rotation due to dead load + live load _	0.0038 rad
Concrete for superstructure	M 30
Concrete for substructure	M25/M30
Width of girder at bearings	400 mm
Length of bearing along bridge axis (Assumed length)	320 mm

Government of Nepal Ministry of Physical Infrastructure and Transport **Department of Roads** **Project Directorate Office (ADB)** **SASEC Highway Improvement Project-** **Project Preparatory Consultant (SHIP-PPC)** **ADB Loan No: 3722-NEP**	**CONSULTANT:** Soosung Engineering Co. Ltd, Korea in association with ERMC P (Ltd) and Tech Studio of Engineeering Nepal	**IMPLEMENTING AGENCY:** **DOR, DCID** **ROAD NAME:** **East West Highway (H01)** **Butwal - Gorusinghe Section**	**SHEET TITLE:** Miscellaneous Details - 2 of **Kanchan Bridge** (46/H001/306_A)	**SCALE:** As Shown		**NAME**	**SIGNATURE**	**REV NO.**	**DESCRIPTION**	**DATE:** November,2022 **DWG.NO.:** 306_Kanchan **SHEET NO.:** 22/27
					Designed by:	Saroj Bhattarai				
					Checked by:	P. Upadhyaya				
					Approved by:	Dr. T.H.Choi				

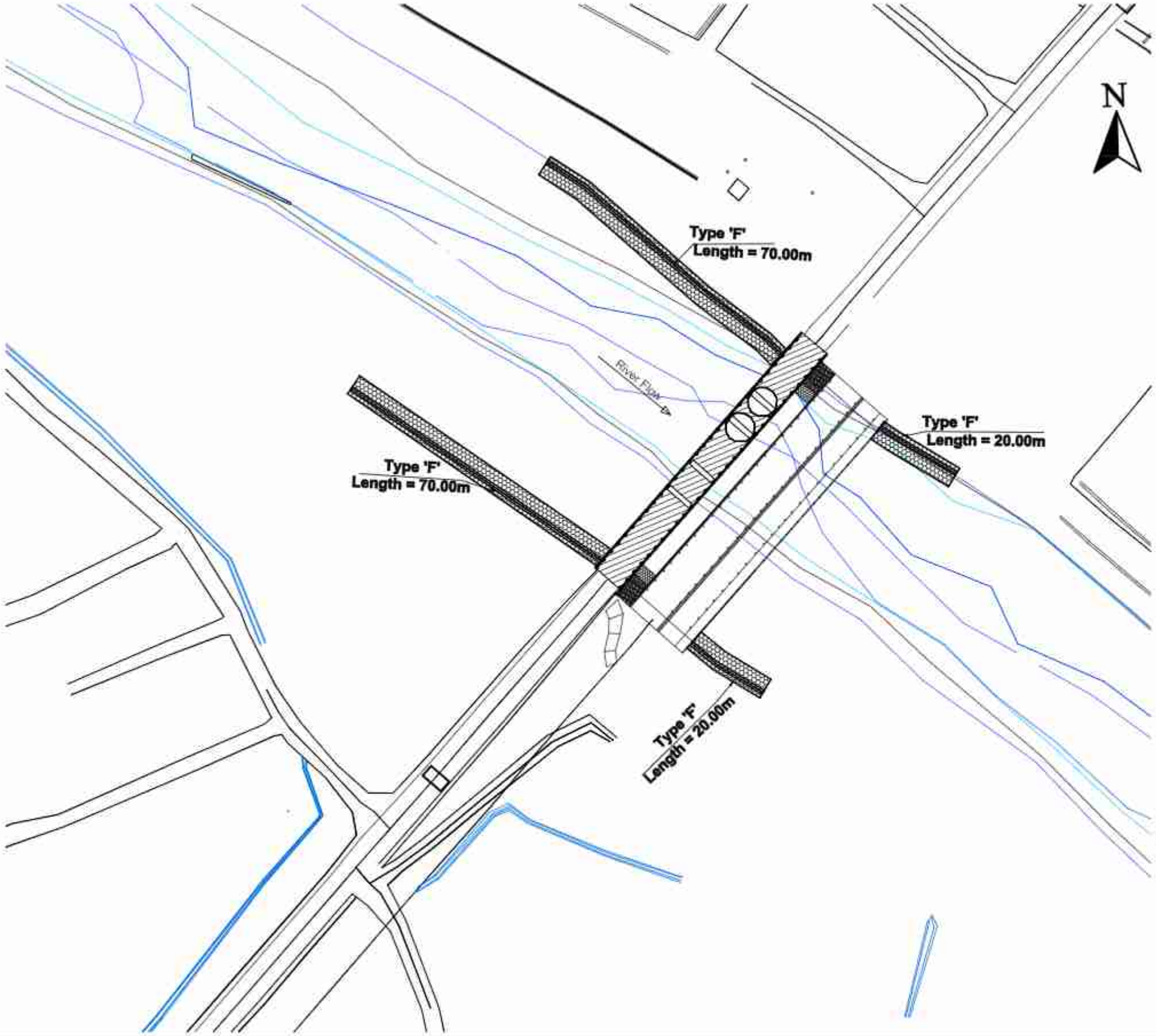

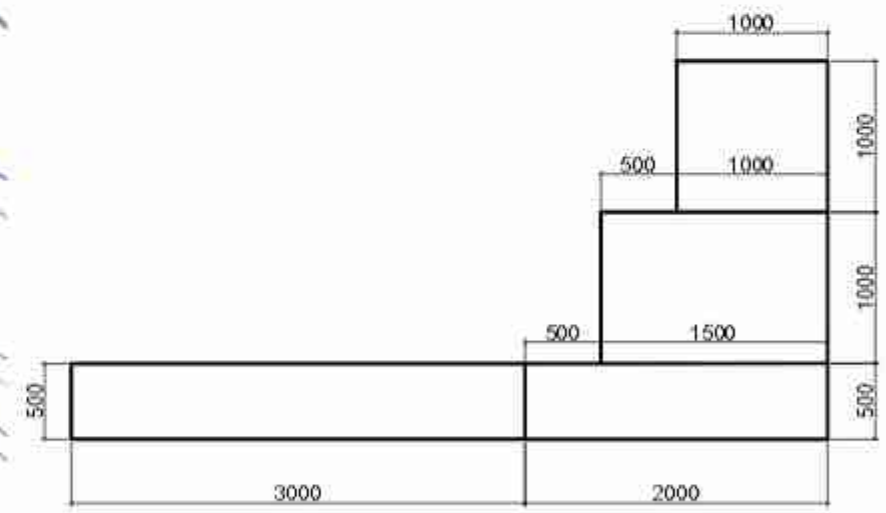

"F" Type River Training Structure
Scale:-1:50

Government of Nepal Ministry of Physical Infrastructure and Transport **Department of Roads** **Project Directorate Office (ADB)** **SASEC Highway Improvement Project-** **Project Preparatory Consultant (SHIP-PPC)** **ADB Loan No: 3722-NEP**	**CONSULTANT:** Soosung Engineering Co. Ltd, Korea in association with ERMC P (Ltd) and Tech Studio of Engineeering Nepal	**IMPLEMENTING AGENCY:** **DOR, DCID** **ROAD NAME:** **East West Highway (H01)** **Butwal - Gorusinghe Section**	**SHEET TITLE:** River Training Work of **Kanchan Bridge** (46/H001/306_A)	**SCALE:** As Shown		**NAME**	**SIGNATURE**	**REV NO.**	**DESCRIPTION**	**DATE:** November,2022 **DWG.NO.:** 306_Kanchan **SHEET NO.:** 23/27
					Designed by:	Saroj Bhattara				
					Checked by:	P. Upadhyaya				
					Approved by:	Dr. T.H.Choi				

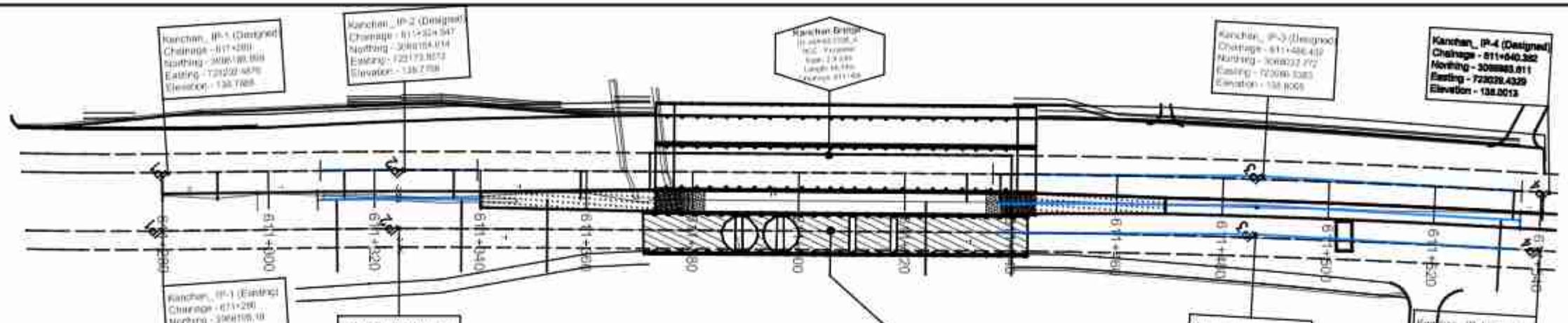

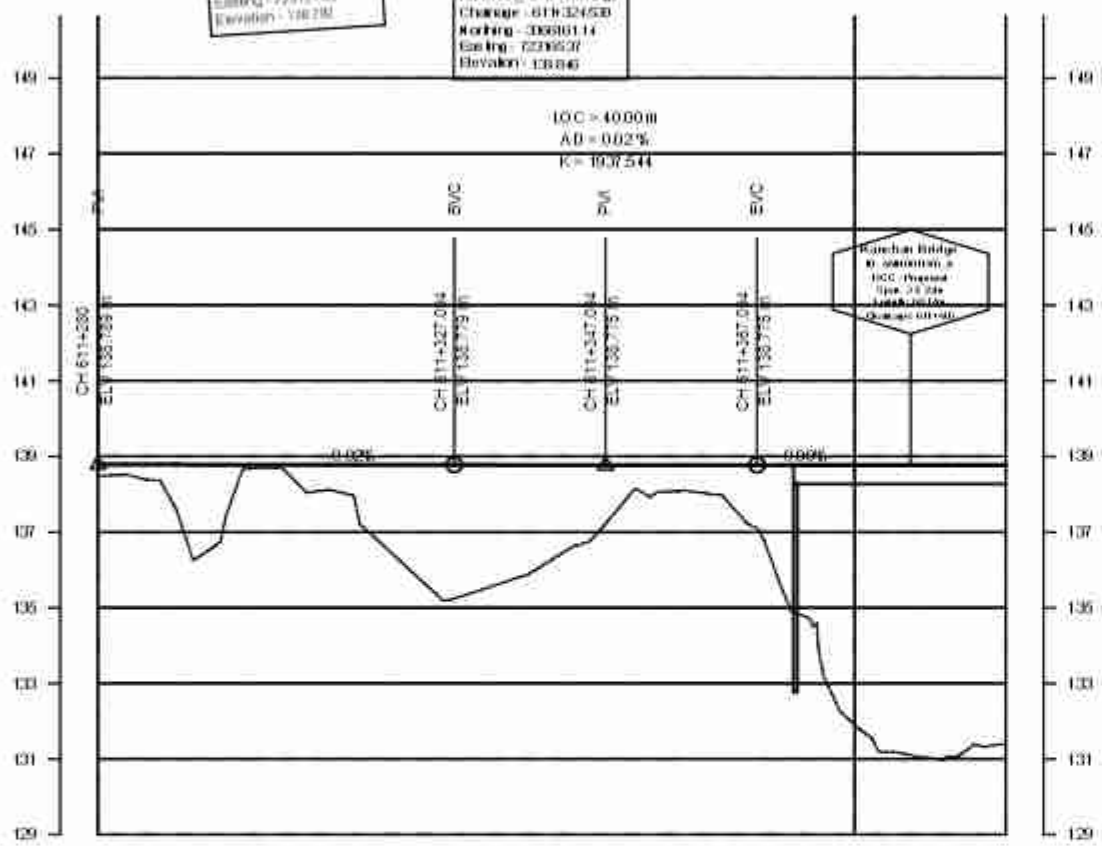

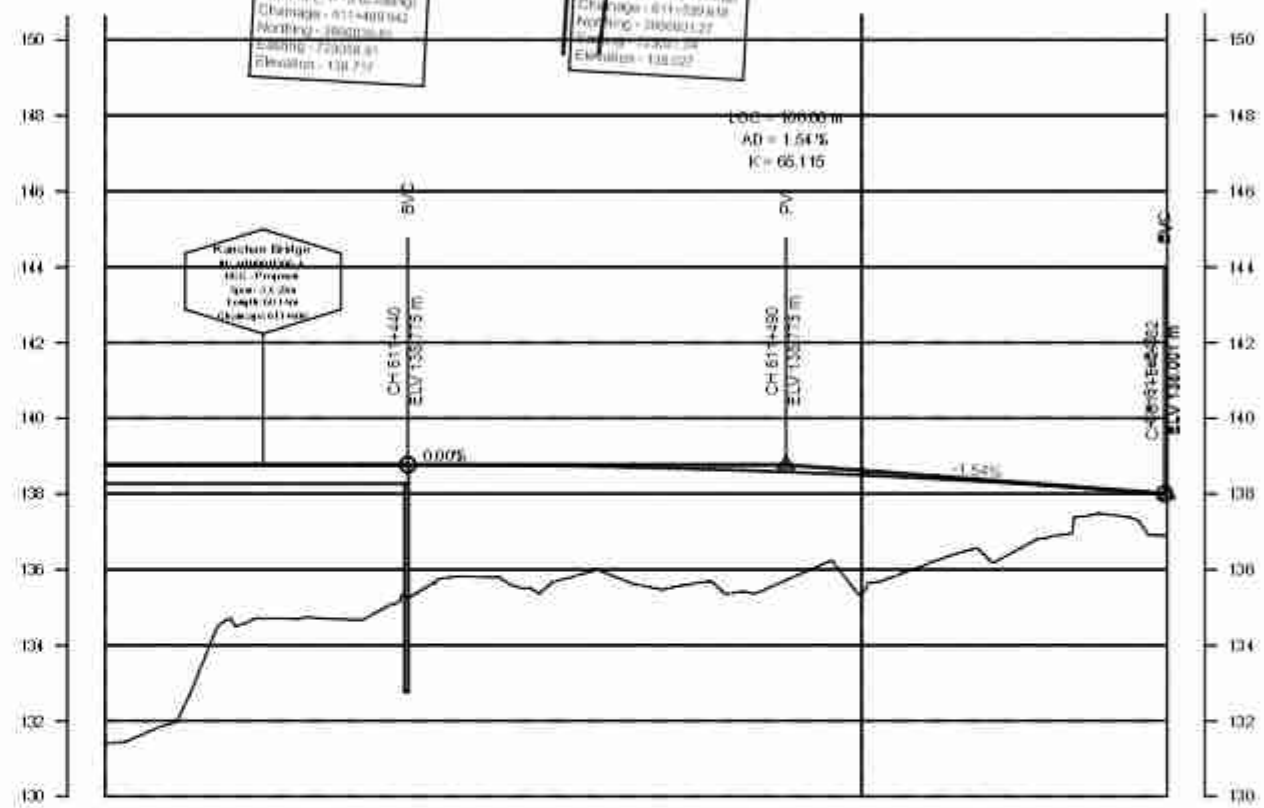

DESIGN LEVEL(m)	138.789	138.787	138.785	138.783	138.781	138.779	138.777	138.775	138.773	138.775	138.775	138.775	138.775
EXISTING LEVEL(m)	138.478	137.719	138.684	138.106	138.225	138.431	138.278	137.917	138.033	138.116	137.916	137.625	137.402
HORIZONTAL ALIGNMENT RIGHT	IP-4 R=0.00			IP-2 R=1505.50									
HORIZONTAL ALIGNMENT LEFT													
SUPER ELEVATION	NC		T		2.5555555555556		T				NC		
	611+280	611+290.395		611+314.311		611+334.984			611+368.9				611+400
CHAINAGE(Km)	611+280	611+290	611+300	611+310	611+320	611+330	611+340	611+350	611+360	611+370	611+380	611+390	611+400

DESIGN LEVEL(m)	138.775	138.775	138.775	138.775	138.775	138.757	138.744	138.736	138.692	138.653	138.499	138.398	138.284	138.193	138.027			
EXISTING LEVEL(m)	131.402	132.209	134.710	134.701	135.282	135.808	135.716	136.616	136.834	136.721	136.367	136.248	136.459	137.425	138.897			
HORIZONTAL ALIGNMENT RIGHT				IP-3 R=2005.50											IP-4 R=0.00			
HORIZONTAL ALIGNMENT LEFT																		
SUPER ELEVATION	NC			T			-2								T			
	611+402			611+431.684	611+437.984									611+534.861	611+540.382			
CHAINAGE(Km)	611+400	611+410	611+420	611+430	611+440	611+450	611+460	611+470	611+480	611+490	611+500	611+510	611+520	611+530	611+540			

Government of Nepal Ministry of Physical Infrastructure and Transport **Department of Roads** **Project Directorate Office (ADB)** **SASEC Highway Improvement Project-** **Project Preparatory Consultant (SHIP-PPC)** **ADB Loan No: 3722-NEP**	**CONSULTANT:** Soosung Engineering Co. Ltd, Korea in association with ERMC P (Ltd), Nepal and TSE-Tech Studio of Engineeering	**IMPLEMENTING AGENCY:** **DOR, DCID** **ROAD NAME:** **East West Highway (H01)** **Butwal - Gorusinghe Section**	**SHEET TITLE:** Plan & Profile of Kanchan Bridge 611+280 - 611+540	**SCALE:** 0 2 4 6m Vertical Scale 0 10 20 30m Horizontal Scale		**NAME**	**SIGNATURE**	**REV NO.**	**DESCRIPTION**	**DATE:** November,2022 **DWG.NO.:** 306_Kanchan **SHEET NO.:** 24/27
					DESIGNED BY:	S.B. Shrestha				
					CHECKED BY:	P. Upadhyaya				
					APPROVED BY:	Dr. T.H.Choi				

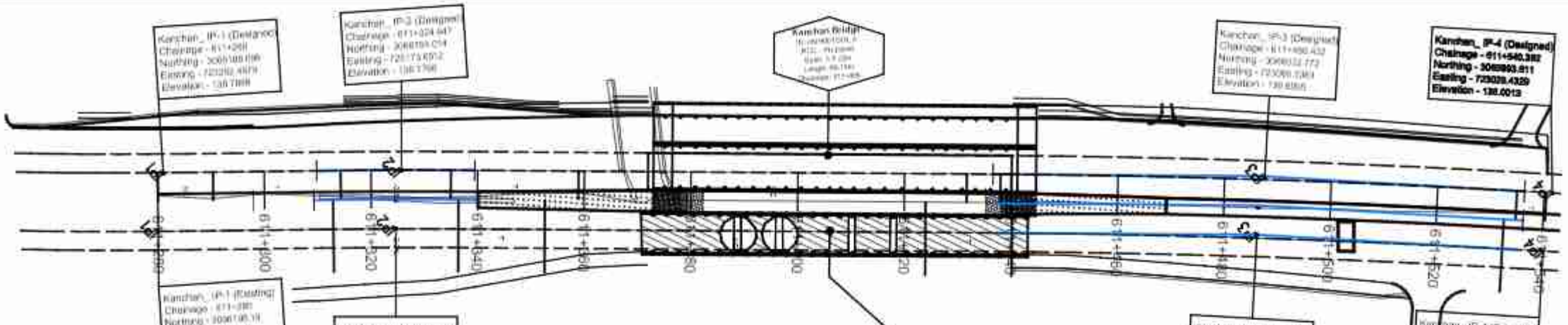

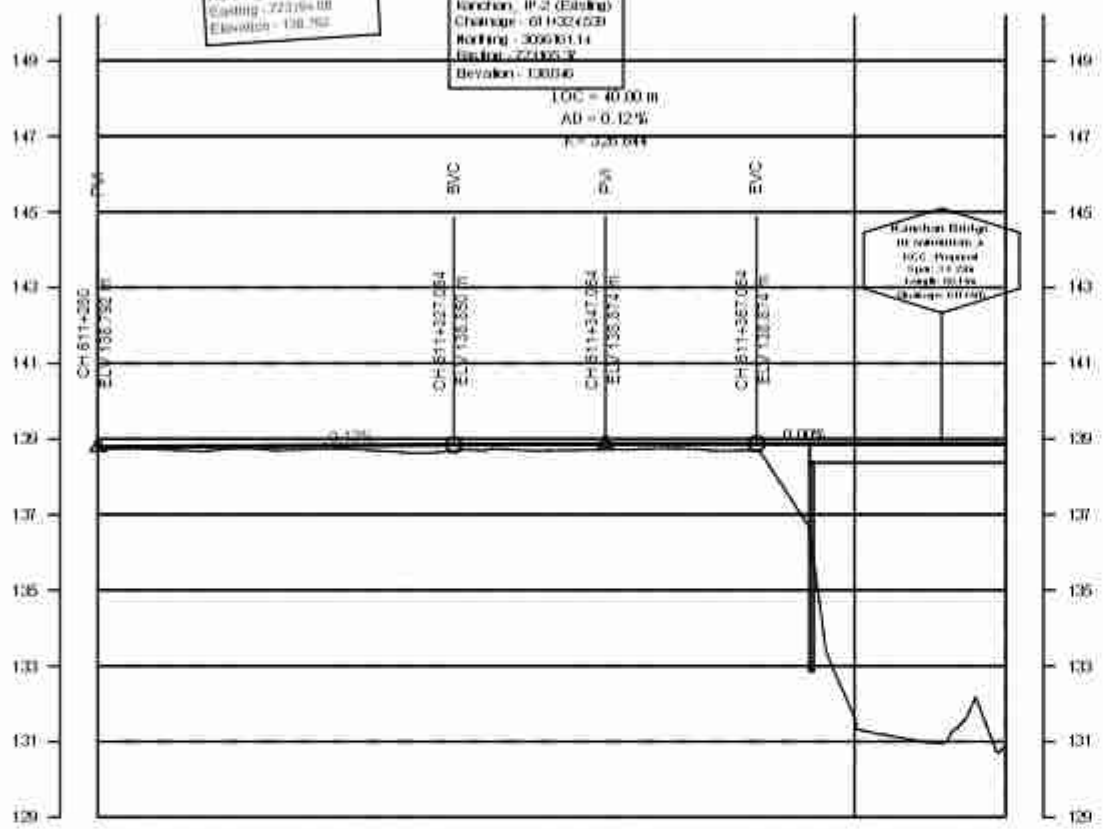

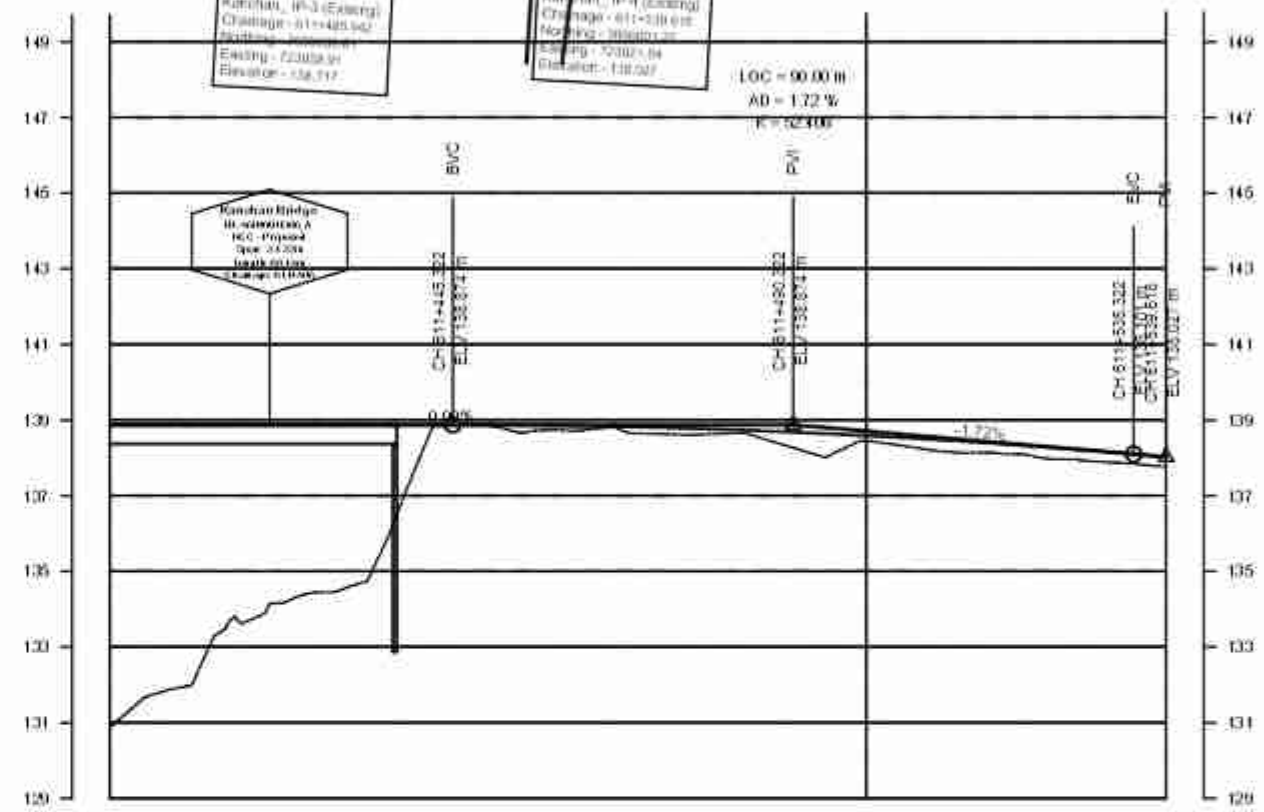

DESIGN LEVEL(m)	138.792	138.864	138.816	138.829	138.841	138.853	138.863	138.870	138.873	138.874	138.874	138.874	138.874
EXISTING LEVEL(m)	138.779	138.710	138.785	138.745	138.652	138.736	138.885	138.717	138.717	137.908	131.612	138.980	138.889
HORIZONTAL ALIGNMENT RIGHT	IP-1 R=0.00			IP-2 R=1494.60									
HORIZONTAL ALIGNMENT LEFT													
SUPER ELEVATION	NC			T	-2.5555555555556		T			NC			
	611+280			611+311.395	611+314.311		611+334.797	611+337.664					611+400
CHAINAGE(Km)	611+280	611+290	611+300	611+310	611+320	611+330	611+340	611+350	611+360	611+370	611+380	611+390	611+400

DESIGN LEVEL(m)	138.874	138.874	138.874	138.874	138.874	138.873	138.863	138.816	138.798	138.664	138.589	138.475	138.342	138.190
EXISTING LEVEL(m)	138.880	131.960	133.945	134.431	137.950	138.880	138.724	138.849	138.634	138.838	138.447	138.175	138.103	137.910
HORIZONTAL ALIGNMENT RIGHT	IP-3 R=1994.50													
HORIZONTAL ALIGNMENT LEFT														
SUPER ELEVATION	NC				T	-2						T	NC	
	611+400				611+439.867							611+532.018	611+539.618	
CHAINAGE(Km)	611+400	611+410	611+420	611+430	611+440	611+450	611+460	611+470	611+480	611+490	611+500	611+510	611+520	611+530

Government of Nepal Ministry of Physical Infrastructure and Transport **Department of Roads** **Project Directorate Office (ADB)** **SASEC Highway Improvement Project-** **Project Preparatory Consultant (SHIP-PPC)** **ADB Loan No: 3722-NEP**	**CONSULTANT:** Soosung Engineering Co. Ltd, Korea in association with ERMC P (Ltd), Nepal and TSE-Tech Studio of Engineering	**IMPLEMENTING AGENCY:** **DOR, DCID** **ROAD NAME:** **East West Highway (H01)** **Butwal - Gorusinghe Section**	**SHEET TITLE:** Plan & Profile of Existing Kanchan Bridge 611+280 - 611+540	**SCALE:** 0 2 4 6m Vertical Scale 0 10 20 30m Horizontal Scale		**NAME**	**SIGNATURE**	**REV NO.**	**DESCRIPTION**	**DATE:** November,2022 **DWG.NO.:** 306_Kanchan **SHEET NO.:** 05/07
					DESIGNED BY:	S.B. Shrestha				
					CHECKED BY:	P. Upadhyaya				
					APPROVED BY:	Dr. T.H.Choi				

Ch:611+150
GL:138.853
DL:139.191

Ch:611+160
GL:138.871
DL:139.161

Ch:611+170
GL:138.854
DL:139.124

Ch:611+180
GL:138.798
DL:139.081

Ch:611+190
GL:138.621
DL:139.037

Ch:611+200
GL:138.735
DL:138.992

Ch:611+210
GL:138.653
DL:138.948

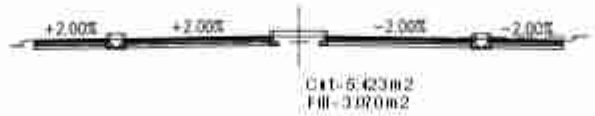

Ch:611+220
GL:138.617
DL:138.904

Ch:611+230
GL:138.717
DL:138.859

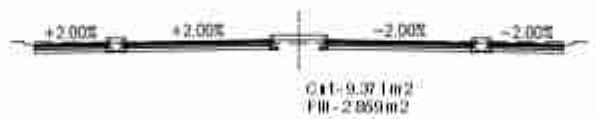

Ch:611+240
GL:138.548
DL:138.818

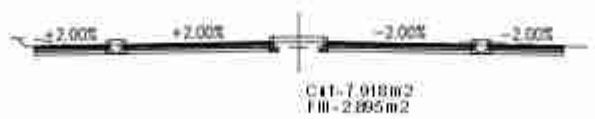

Ch:611+250
GL:138.366
DL:138.791

Ch:611+260
GL:138.508
DL:138.779

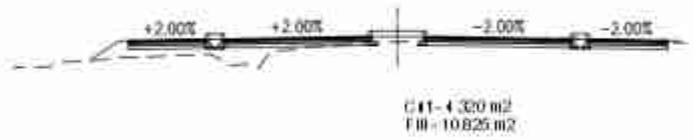

Ch:611+270
GL:138.404
DL:138.781

Ch:611+280
GL:138.490
DL:138.795
GL: 138.479
DL: 138.789

Ch:611+290
GL:138.219
DL:138.809
GL: 137.719
DL: 138.787
GL: 138.710
DL: 138.804

Government of Nepal Ministry of Physical Infrastructure and Transport **Department of Roads** **Project Directorate Office (ADB)** **SASEC Highway Improvement Project-** **Project Preparatory Consultant (SHIP-PPC)** **ADB Loan No: 3722-NEP**	**CONSULTANT:** Soosung Engineering Co. Ltd, Korea in association with ERMC P (Ltd), Nepal and TSE-Tech Studio of Engineeering	**IMPLEMENTING AGENCY:** **DOR, DCID** **ROAD NAME:** **East West Highway (H01)** **Butwal - Gorusinghe Section**	**SHEET TITLE:** Cross Section of Ch:611+150 - 611+290	**SCALE:** 0 2 4 6m vertical scale 0 10 20 30m horizontal scale		**NAME**	**SIGNATURE**	**REV NO.**	**DESCRIPTION**	**DATE:** November,2022 **DWG.NO.:** 306_Kanchan **SHEET NO.:** 26 / 27
					DESIGNED BY:	S.B. Shrestha				
					CHECKED BY:	P. Upadhyaya				
					APPROVED BY:	Dr. T.H.Choi				

Ch:611+300
GL:138.520
DL:138.824
GL: 138.684 GL: 138.758
DL: 138.785 DL: 138.816

Ch:611+310
GL:138.551
DL:138.837
GL: 138.105 GL: 138.745
DL: 138.783 DL: 138.829

Ch:611+320
GL:138.416
DL:138.848
GL: 136.218 GL: 138.652
DL: 138.781 DL: 138.841

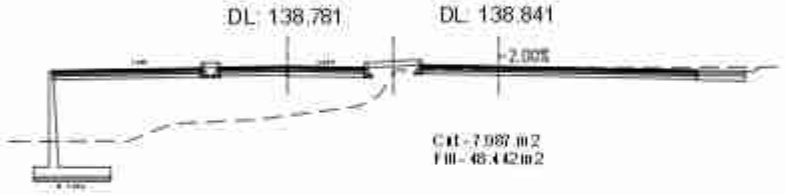

Ch:611+330
GL:138.100
DL:138.858
GL: 135.435 GL: 138.706
DL: 138.779 DL: 138.853

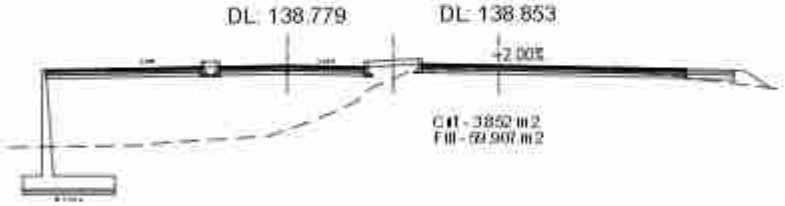

Ch:611+340
GL:138.323
DL:138.865
GL: 136.292 GL: 138.695
DL: 138.777 DL: 138.863

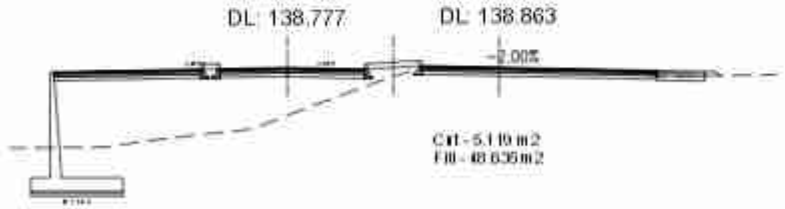

Ch:611+350
GL:138.574
DL:138.870
GL: 137.943 GL: 138.716
DL: 138.776 DL: 138.870

Ch:611+360
GL:138.501
DL:138.873
GL: 138.031 GL: 138.718
DL: 138.775 DL: 138.873

Ch:611+370
GL:137.138
DL:138.874
GL: 135.656 GL: 137.941
DL: 138.775 DL: 138.874

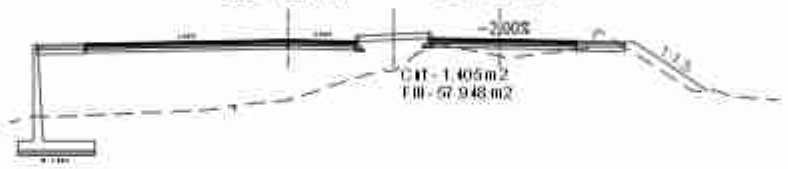

Ch:611+380
GL:131.797
DL:138.874
GL: 131.896 GL: 131.706
DL: 138.775 DL: 138.874
Bridge Th: 0.5 m

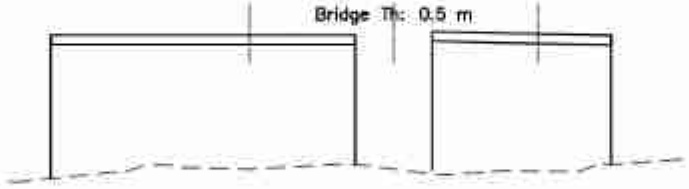

Ch:611+390
GL:131.252
DL:138.874
GL: 131.022 GL: 130.981
DL: 138.775 DL: 138.874
Bridge Th: 0.5 m

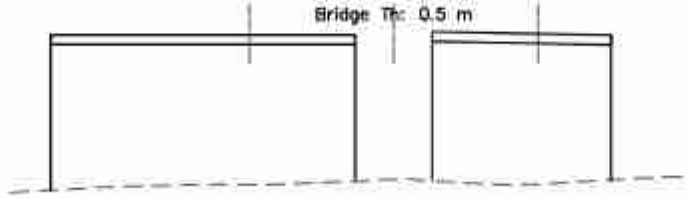

Ch:611+400
GL:131.464
DL:138.874
GL: 131.404 GL: 130.861
DL: 138.775 DL: 138.874
Bridge Th: 0.5 m

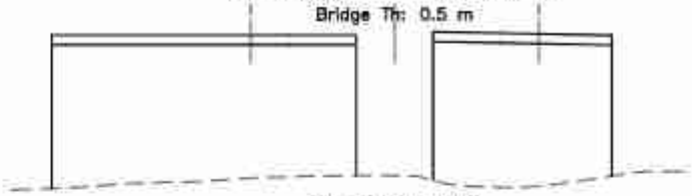

Ch:611+410
GL:132.025
DL:138.874
GL: 132.254 GL: 131.955
DL: 138.775 DL: 138.874
Bridge Th: 0.5 m

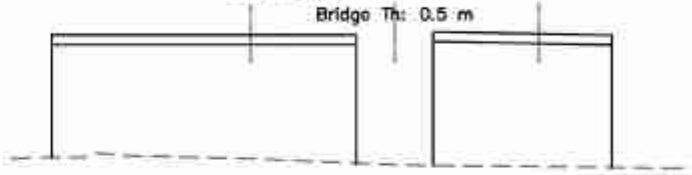

Ch:611+420
GL:134.641
DL:138.874
GL: 134.714 GL: 133.837
DL: 138.775 DL: 138.874
Bridge Th: 0.5 m

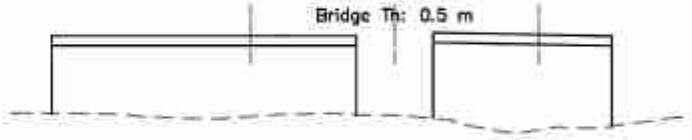

Ch:611+430
GL:134.640
DL:138.874
GL: 134.700 GL: 134.474
DL: 138.775 DL: 138.874
Bridge Th: 0.5 m

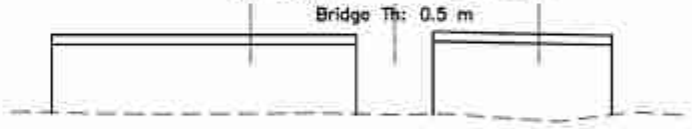

Ch:611+440
GL:136.930
DL:138.872
GL: 135.262 GL: 137.491
DL: 138.775 DL: 138.874
Bridge Th: 0.5 m

Government of Nepal Ministry of Physical Infrastructure and Transport **Department of Roads** **Project Directorate Office (ADB)** **SASEC Highway Improvement Project-** **Project Preparatory Consultant (SHIP-PPC)** **ADB Loan No: 3722-NEP**	**CONSULTANT:** Soosung Engineering Co. Ltd, Korea in association with ERMC P (Ltd), Nepal and TSE-Tech Studio of Engineeering	**IMPLEMENTING AGENCY:** **DOR, DCID** **ROAD NAME:** **East West Highway (H01)** **Butwal - Gorusinghe Section**	**SHEET TITLE:** Cross Section of Ch:611+300 - 611+440	**SCALE:** 0 2 4 6m Vertical Scale 0 10 20 30m Horizontal Scale		NAME	SIGNATURE	REV NO.	DESCRIPTION	DATE: November,2022 DWG.NO.: 306_Kanchan SHEET NO.: 26.2.07
					DESIGNED BY:	S.B. Shrestha				
					CHECKED BY:	P. Upadhyaya				
					APPROVED BY:	Dr. T.H.Choi				

Ch:611+450
GL:137.961
DL:138.857
GL: 135.807 GL: 138.876
DL: 138.767 DL: 138.872

Ch:611+460
GL:137.927
DL:138.826
GL: 135.725 GL: 138.727
DL: 138.744 DL: 138.853

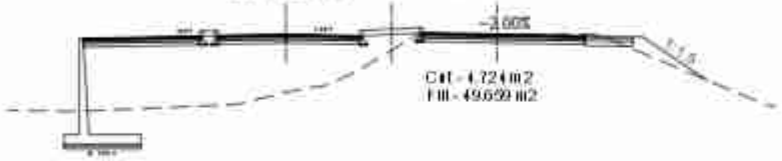

Ch:611+470
GL:137.826
DL:138.780
GL: 135.607 GL: 138.650
DL: 138.706 DL: 138.816

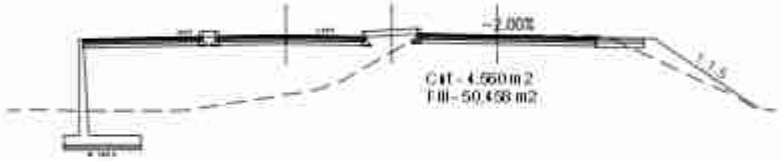

Ch:611+480
GL:137.851
DL:138.718
GL: 135.657 GL: 138.633
DL: 138.652 DL: 138.759

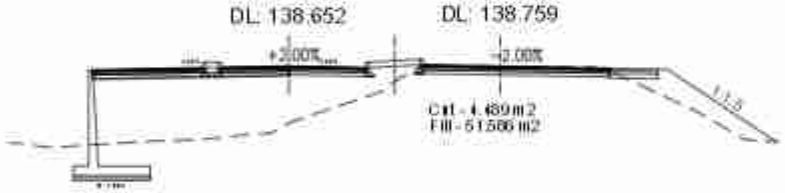

Ch:611+490
GL:137.683
DL:138.641
GL: 135.743 GL: 138.303
DL: 138.583 DL: 138.684

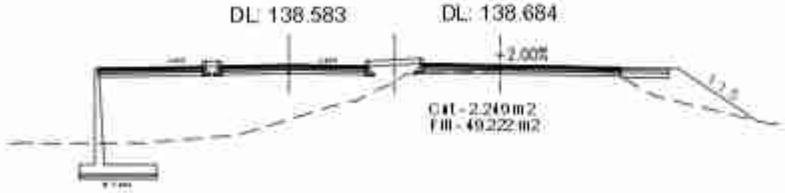

Ch:611+500
GL:137.863
DL:138.548
GL: 135.404 GL: 138.451
DL: 138.499 DL: 138.589

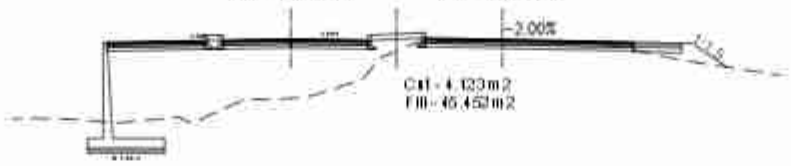

Ch:611+510
GL:137.761
DL:138.440
GL: 136.272 GL: 138.181
DL: 138.399 DL: 138.475

Ch:611+520
GL:137.947
DL:138.317
GL: 136.496 GL: 138.103
DL: 138.284 DL: 138.342

Ch:611+530
GL:137.867
DL:138.178
GL: 137.441 GL: 137.915
DL: 138.153 DL: 138.190

Ch:611+540
GL:137.714
DL:138.024
GL: 136.893 GL: 137.765
DL: 138.001 DL: 138.027

Ch:611+550
GL:137.598
DL:137.857

Ch:611+560
GL:137.429
DL:137.687

Ch:611+570
GL:137.241
DL:137.517

Ch:611+580
GL:137.076
DL:137.348

Ch:611+590
GL:136.910
DL:137.178

Government of Nepal Ministry of Physical Infrastructure and Transport **Department of Roads** **Project Directorate Office (ADB)** **SASEC Highway Improvement Project-** **Project Preparatory Consultant (SHIP-PPC)** **ADB Loan No: 3722-NEP**	**CONSULTANT:** Soosung Engineering Co. Ltd, Korea in association with ERMC P (Ltd), Nepal and TSE-Tech Studio of Engineering	**IMPLEMENTING AGENCY:** **DOR, DCID** **ROAD NAME:** **East West Highway (H01)** **Butwal - Gorusinghe Section**	**SHEET TITLE:** Cross Section of Ch:611+450 - 611+590	**SCALE:** 0 2 4 6m Vertical Scale 0 10 20 30m Horizontal Scale		**NAME**	**SIGNATURE**	**REV NO.**	**DESCRIPTION**	**DATE:** November,2022 **DWG.NO.:** 306_Kanchan **SHEET NO.:** 06 3.07
					DESIGNED BY:	S.B. Shrestha				
					CHECKED BY:	P. Upadhyaya				
					APPROVED BY:	Dr. T.H.Choi				

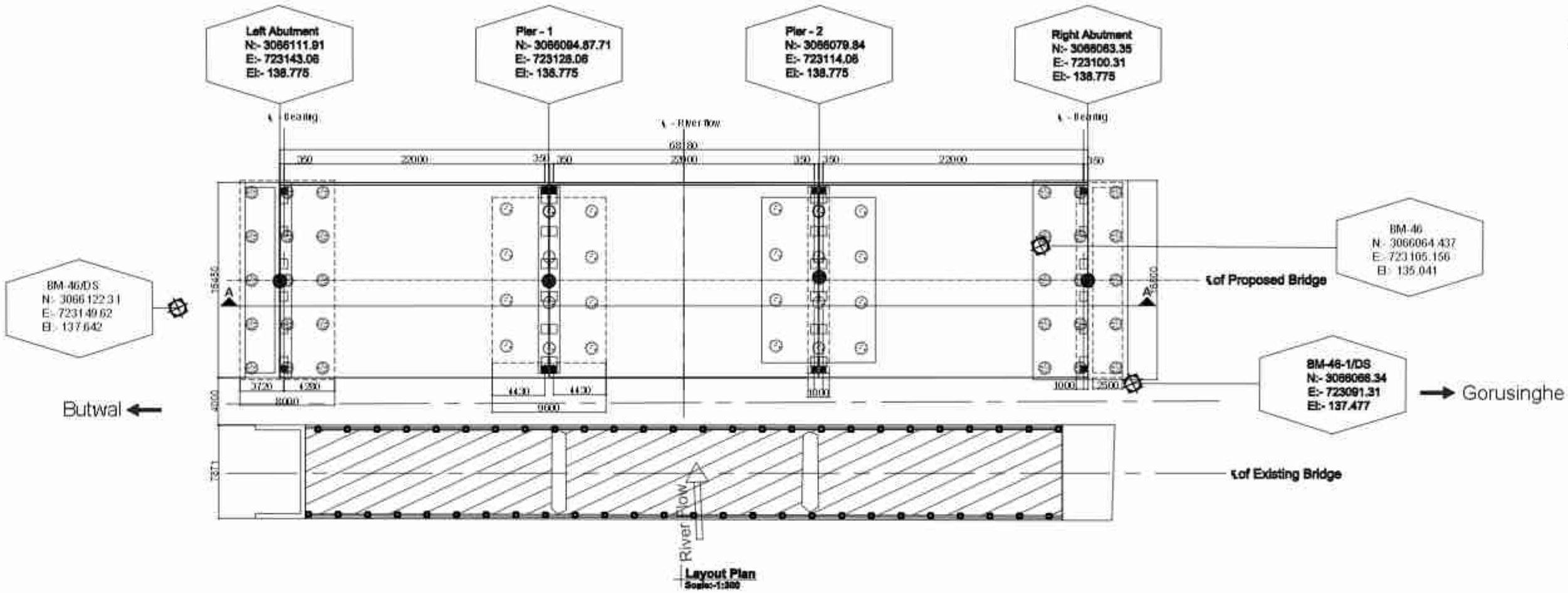

Layout Plan
Scale:-1:300

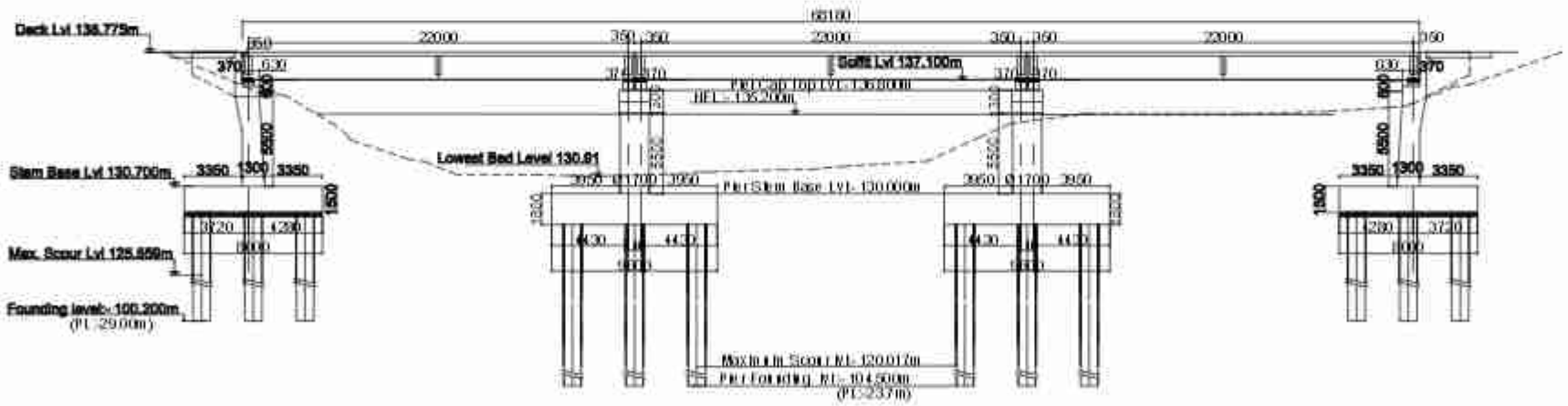

Section at A-A
Scale :-1:300

Government of Nepal Ministry of Physical Infrastructure and Transport **Department of Roads** **Project Directorate Office (ADB)** **SASEC Highway Improvement Project-** **Project Preparatory Consultant (SHIP-PPC)** **ADB Loan No: 3722-NEP**	**CONSULTANT:** Soosung Engineering Co. Ltd, Korea in association with ERMC P. (Ltd) and Tech Studio of Engineering Nepal	**IMPLEMENTING AGENCY:** **DOR, DCID** **ROAD NAME:** **East West Highway (H01)** **Butwal - Gorusinghe Section**	**SHEET TITLE:** Layout Plan of **Kanchan Bridge** (46/H001/306_A)	**SCALE:** As Shown		NAME	SIGNATURE	REV NO.	DESCRIPTION	DATE: November,2022
					Designed by:					DWG.NO.: 306_Kanchan
					Checked by:					
					Approved by:					SHEET NO.: 26/27

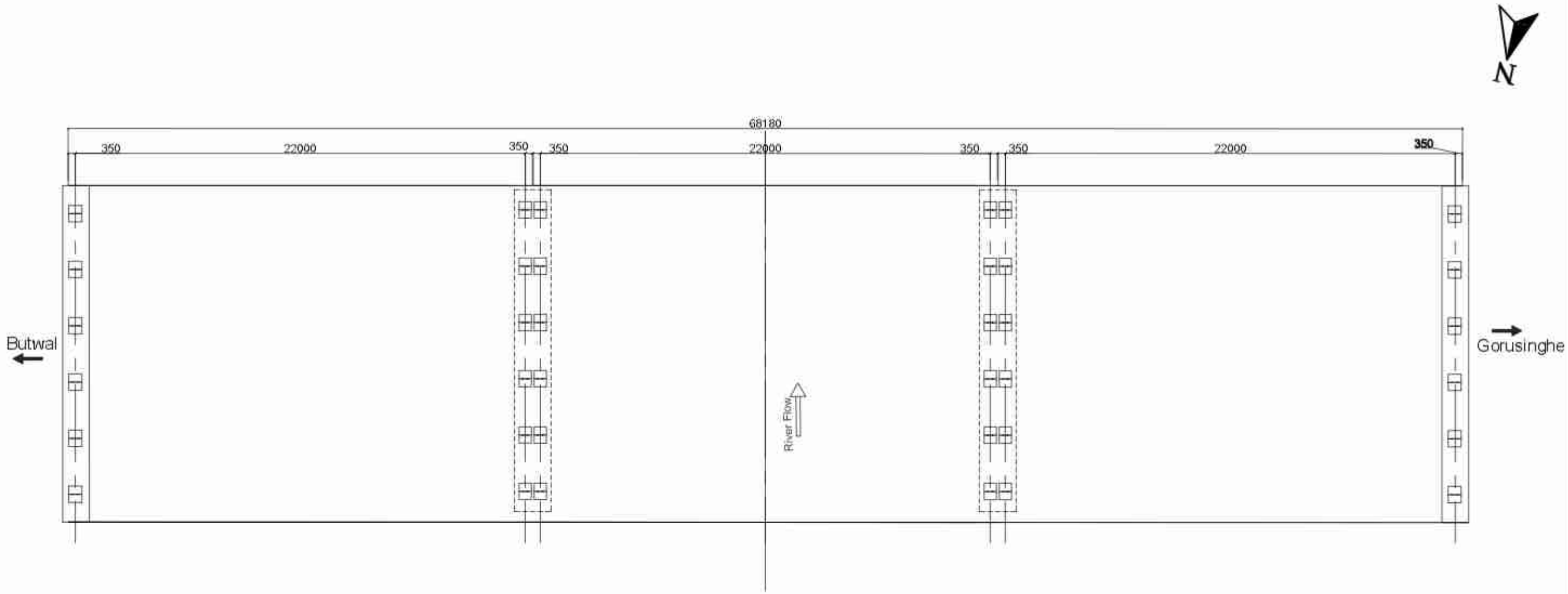

Layout of Bearing
Scale:-1:200

Legend

Elastomeric bearing.
Partial movement allowed in longitudinal direction.
Restrained to transverse movement.Free to rotate in any direction.

Fixed Pot-bearing.
Restrainde to lateral movement,Free to rotate in aney direction.

Free Pot-bearing.
Partial movement allowed in longitudinal direction.
Restrained to transverse movement.Free to rotate in any direction.

Government of Nepal Ministry of Physical Infrastructure and Transport **Department of Roads** **Project Directorate Office (ADB)** **SASEC Highway Improvement Project-** **Project Preparatory Consultant (SHIP-PPC)** **ADB Loan No: 3722-NEP**	**CONSULTANT:** Soosung Engineering Co. Ltd, Korea in association with ERMC P (Ltd) and Tech Studio of Engineeering Nepal	**IMPLEMENTING AGENCY:** **DOR, DCID**	**SHEET TITLE:**	**SCALE:**		NAME	SIGNATURE	REV NO.	DESCRIPTION	DATE: November,2022
		ROAD NAME: **East West Highway (H01)**	Layout Plan of **Kanchan Bridge** (46/H001/306_A)	As Shown	Designed by:	Saroj Bhattarai				DWG.NO.: 306_Kanchan
					Checked by:	P. Upadhyaya				
		Butwal - Gorusinghe Section			Approved by:	Dr. T.H.Choi				SHEET NO.: 27/27