Government of Nepal Ministry of Physical Infrastructure and Transport **Department of Roads** **Project Directorate Office (ADB)** **SASEC Highway Improvement Project-** **Project Preparatory Consultant (SHIP-PPC)** **ADB Loan No: 3722-NEP**	**CONSULTANT:** Soosung Engineering Co. Ltd, Korea in association with ERMC P. (Ltd) and Tech Studio of Engineeering Nepal	**IMPLEMENTING AGENCY:** **DOR, DCID**	**SHEET TITLE:**	**SCALE:**		NAME	SIGNATURE	REV NO.	DESCRIPTION	DATE: November , 2022
		ROAD NAME: **East \ West Highway (H01)**	Topographic Map of **295_Rajpur** (46/H001/295_A)	1:1	Designed by:	Saroj Bhattarai				DWG.NO.: 295_Rajpur
		Butwal - Gorusinghe Section			Checked by:	P. Upadhyaya				SHEET NO.: 2.1/25
					Approved by:	Dr. T.H.Choi				

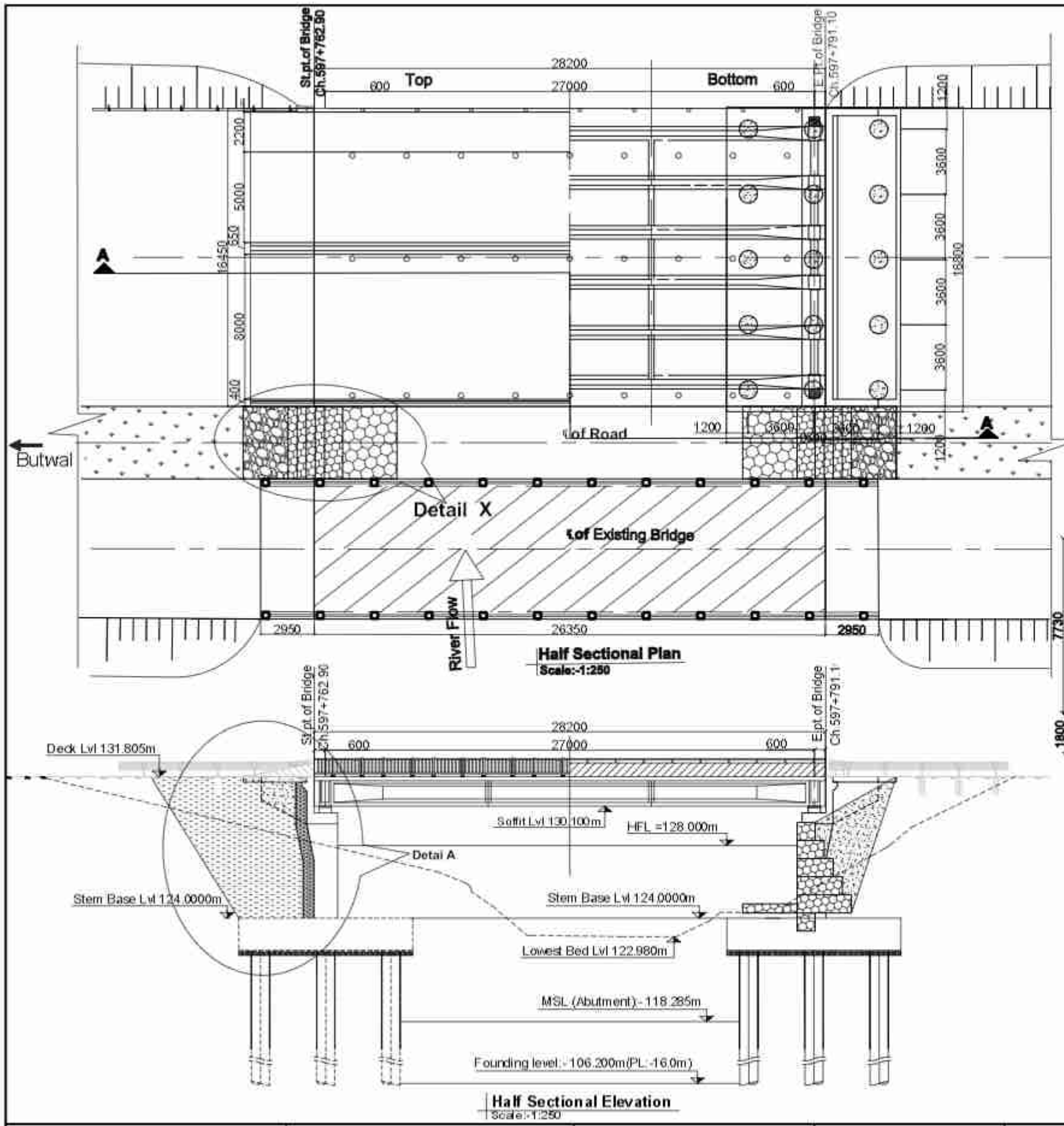

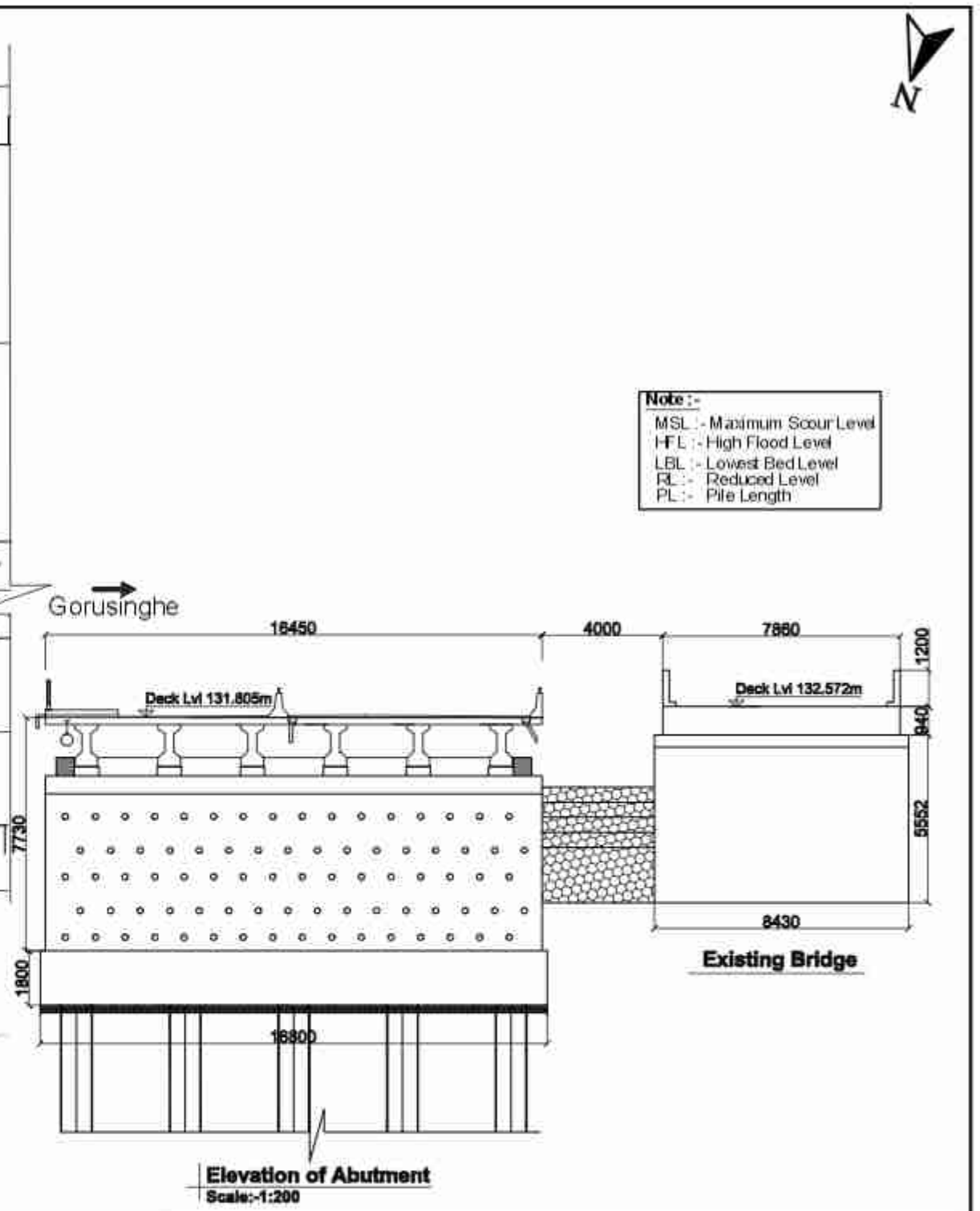

	Name(NEC Number)	Signature
P. Engineer	P. Upadhyaya (Civil A 675)	
Structure Engineer	K.P.Wagle(Civil A 127) / P.Shrestha(Civil A 676) / S.Bhattarai (Civil A 904)	
Hydrologist	Dr. P.C. Jha(Civil A 166) / S. Adhikari (Civil A 408)	
Geotechnical Engineer	A. Adhikari(ka 199) / Dr. V. R. S. Shahi	

Government of Nepal Ministry of Physical Infrastructure and Transport **Department of Roads** **Project Directorate Office (ADB)** **SASEC Highway Improvement Project-** **Project Preparatory Consultant (SHIP-PPC)** **ADB Loan No: 3722-NEP**	**CONSULTANT:** Soosung Engineering Co. Ltd, Korea in association with ERMC P. (Ltd) and Tech Studio of Engineeering Nepal	**IMPLEMENTING AGENCY:** **DOR, DCID** **ROAD NAME:** **East West Highway (H01)** **Butwal - Gorusinghe Section**	**SHEET TITLE:** General Arrangement of **Rajpur Bridge** (46/H001/295_A)	**SCALE:** As Shown		NAME	SIGNATURE	REV NO.	DESCRIPTION	DATE: November , 2022
					Designed by:	Saroj Bhattarai				DWG.NO.: 295_Rajpur
					Checked by:	P. Upadhyaya				
					Approved by:	Dr. T.H.Choi				SHEET NO.: 03/25

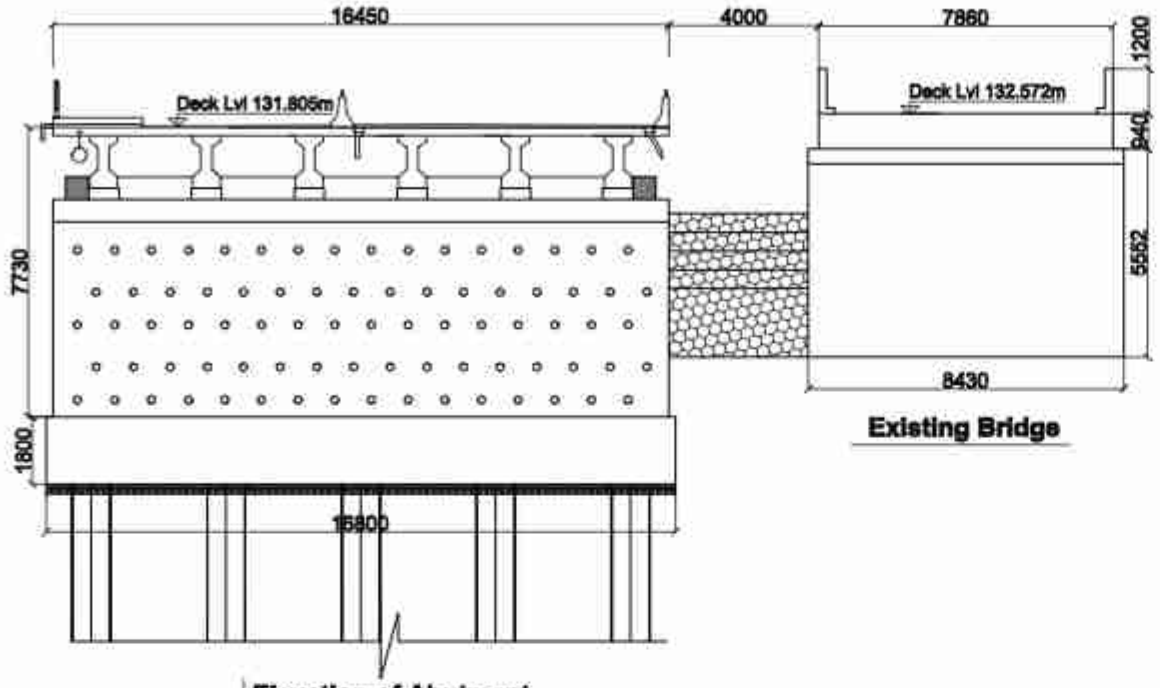

Existing Bridge

Elevation of Abutment

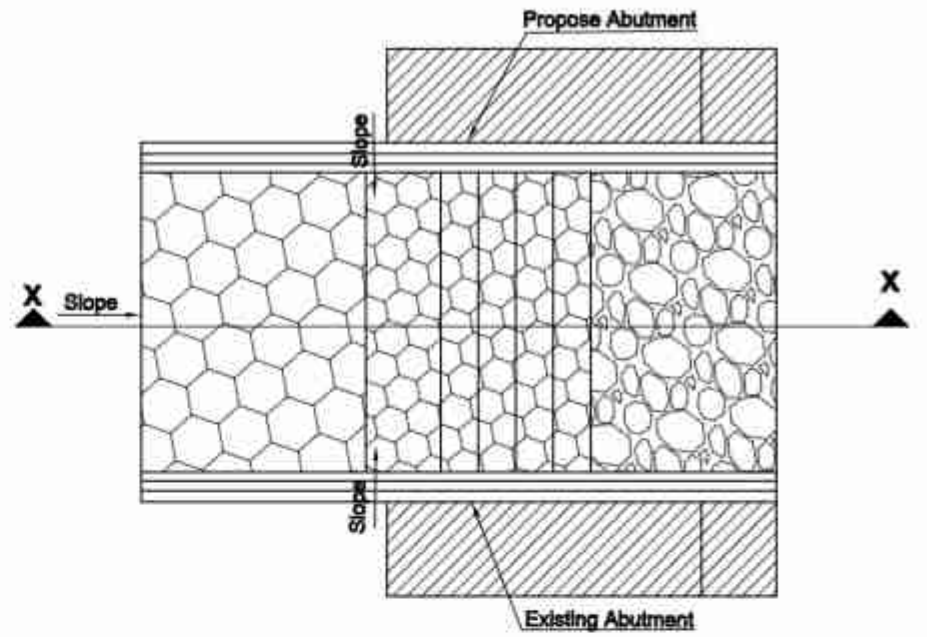

Detail Plan of X
(Transition Between Approch Embankmant)
Scale:-1:100

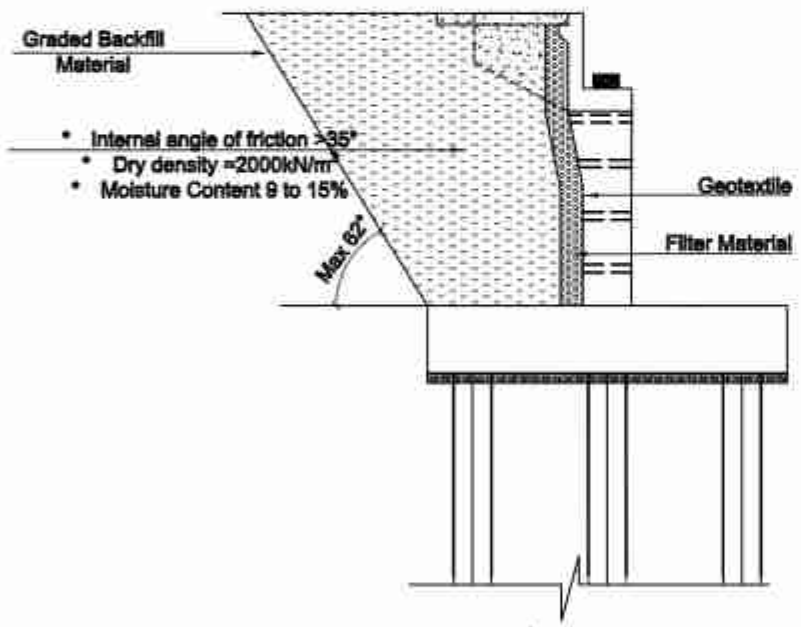

Detail of A
Scale:-1:200

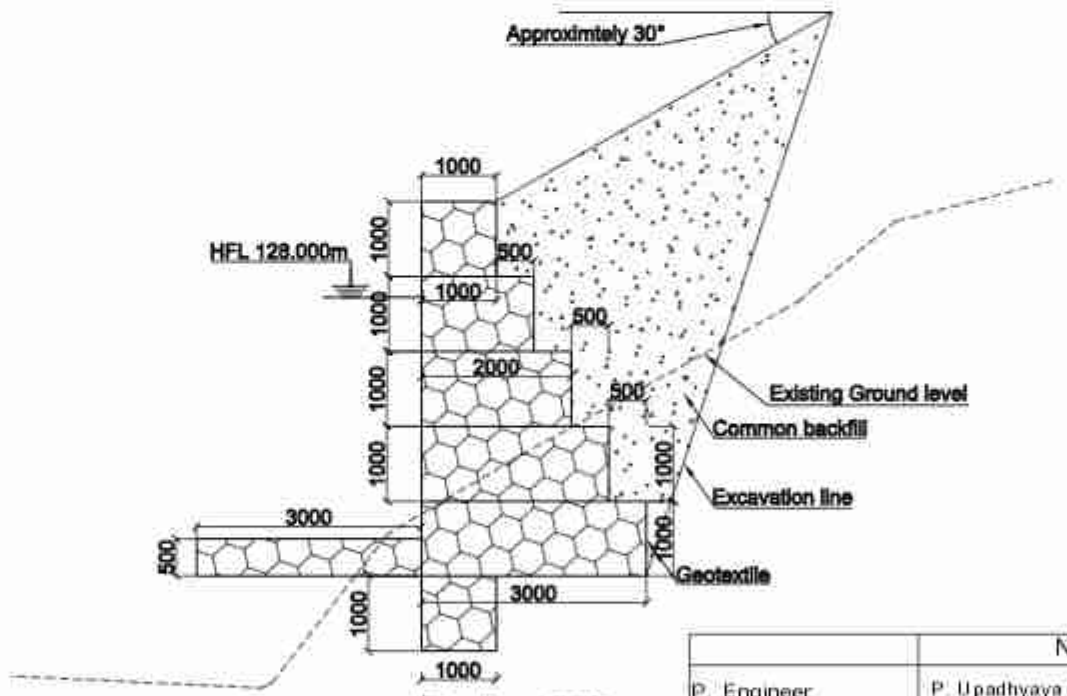

Section at X-X
Scale:-1:100

	Name(NEC Number)	Signature
P. Engineer	P. Upadhyaya (Civil A 675)	
Structure Engineer	K.P.Wagle(Civil A 127) / P.Shrestha(Civil A 675) / S.Bhattarai (Civil A 904)	
Hydrologist	Dr. P.C. Jha(Civil A 166) / S. Adhikari (Civil A 408)	
Geotechnical Engineer	A. Adhikari(ka 199) / Dr. V. R. S. Shahi	

Government of Nepal Ministry of Physical Infrastructure and Transport **Department of Roads** **Project Directorate Office (ADB)** **SASEC Highway Improvement Project-** Project Preparatory Consultant (SHIP-PPC) ADB Loan No: 3722-NEP	**CONSULTANT:** Soosung Engineering Co. Ltd, Korea in association with ERMC P (Ltd) and Tech Studio of Engineeering Nepal	**IMPLEMENTING AGENCY:** **DOR, DCID** **ROAD NAME:** **East West Highway (H01)** **Butwal - Gorusinghe Section**	**SHEET TITLE:** General Arrangement of **Rajpur bridge** (48/H001/295_A)	**SCALE:** As Shown		NAME	SIGNATURE	REV NO.	DESCRIPTION	DATE: November , 2022
					Designed by:	Saroj Bhattarai				DWG.NO.: 295_Rajpur
					Checked by:	P. Upadhyaya				
					Approved by:	Dr. T.H.Choi				SHEET NO.: 04/25

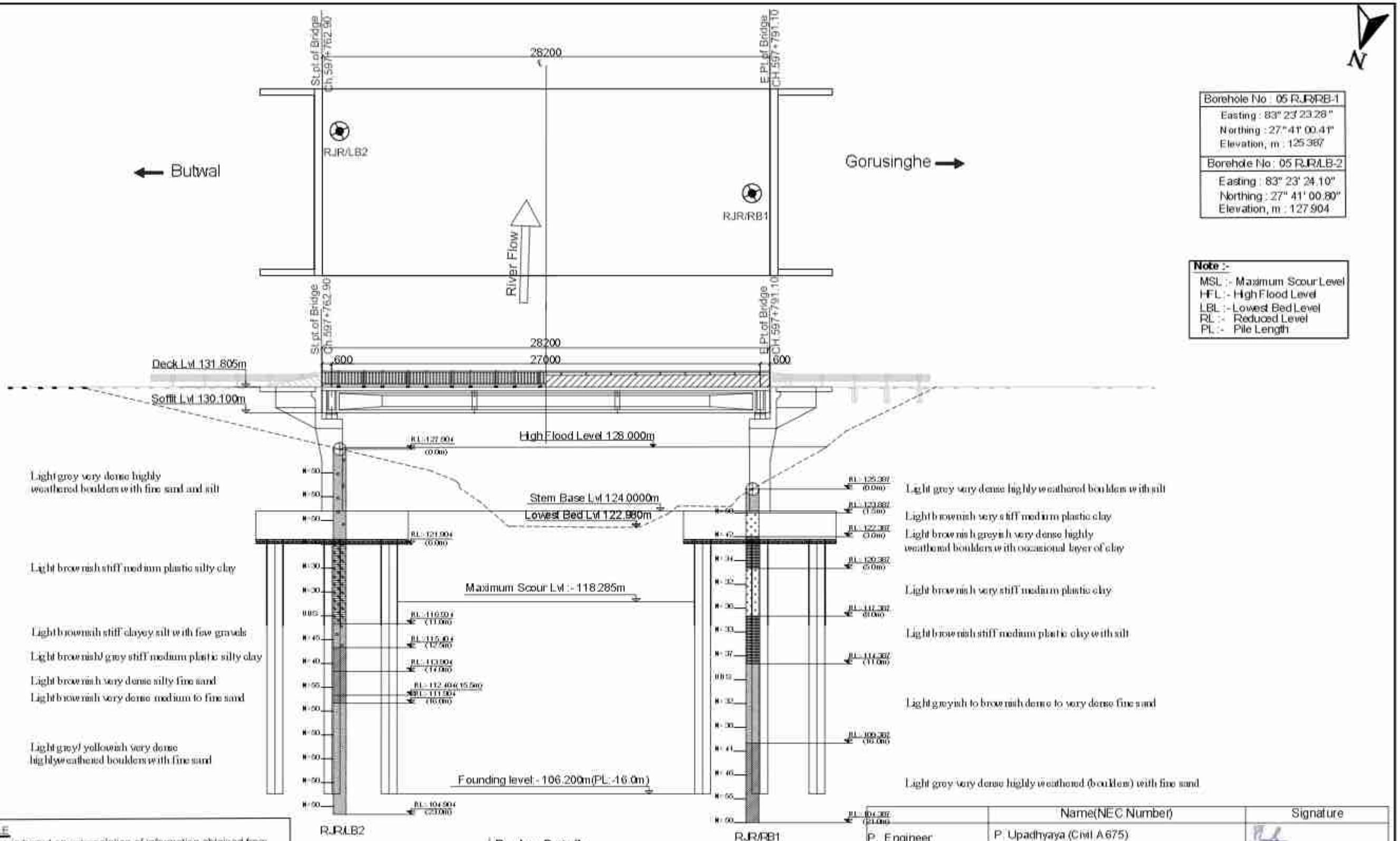

Borehole No : 05 RJR/RB-1
Easting : 83° 23' 23.28"
Northing : 27° 41' 00.41"
Elevation, m : 125.387
Borehole No : 05 RJR/LB-2
Easting : 83° 23' 24.10"
Northing : 27° 41' 00.80"
Elevation, m : 127.904

Note :-
MSL :- Maximum Scour Level
HFL :- High Flood Level
LBL :- Lowest Bed Level
RL :- Reduced Level
PL :- Pile Length

Borlog Details
Scale :- 1:250

NOTE ON SUB-SOIL PROFILE
The sub-soil profile shown here is based on extrapolation of information obtained from the investigation bore-holes at the locations as shown.
The actual soil type away from the vicinity of the boreholes may differ .

Location	Design Pile Length m	Design Working load on pile (non - seismic casse)kn	Allowable Bearing Capacity on pile (Scour case)kn	Allowable Bearing Capacity on pile (Non Scour case)kn
Abutment	16	2071	2367	2572

	Name(NEC Number)	Signature
P. Engineer	P. Upadhyaya (Civil A 675)	
Structure Engineer	K.P.Wagle(Civil A 127) / P.Shrestha(Civil A 676) / S.Bhattarai (Civil A 904)	
Hydrologist	Dr. P.C. Jha(Civil A 166) / S. Adhikari (Civil A 408)	
Geotechnical Engineer	A. Adhikari(ka 199) / Dr. V. R. S. Shahi	

Government of Nepal
Ministry of Physical Infrastructure and Transport
Department of Roads
Project Directorate Office (ADB)
SASEC Highway Improvement Project-
Project Preparatory Consultant (SHIP-PPC)
ADB Loan No: 3722-NEP

CONSULTANT:
Soosung Engineering Co. Ltd, Korea
in association with
ERMC P (Ltd)
and
Tech Studio of Engineeering Nepal

IMPLEMENTING AGENCY:
DOR, DCID

ROAD NAME:
East West Highway (H01)
Butwal - Gorusinghe Section

SHEET TITLE:
General Arrangement of
Rajpur Bridge
(46/H001/295_A)

SCALE:
As Shown: 1:250

	NAME	SIGNATURE	REV NO.	DESCRIPTION
Designed by:	Saroj Bhattarai			
Checked by:	P. Upadhyaya			
Approved by:	Dr. T.H.Choi			

DATE: November , 2022
DWG.NO.: 295_Rajpur
SHEET NO.: 05/25

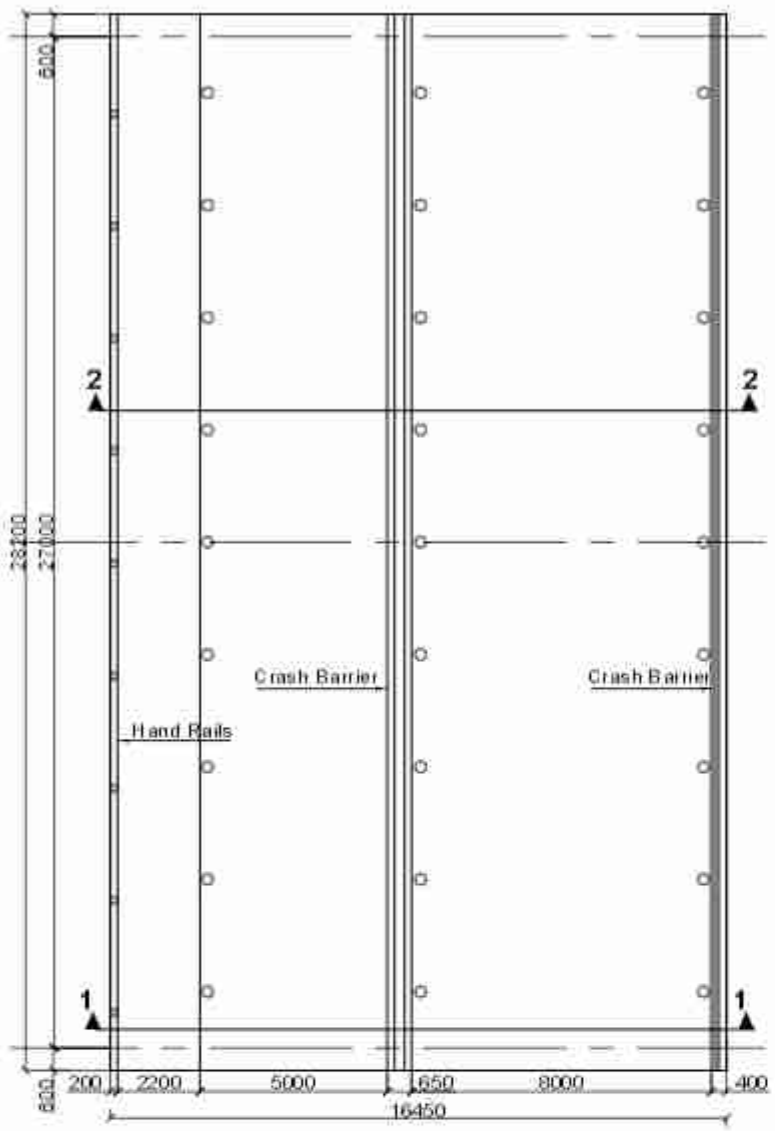

Plan Of Deck
Scale:-1:200

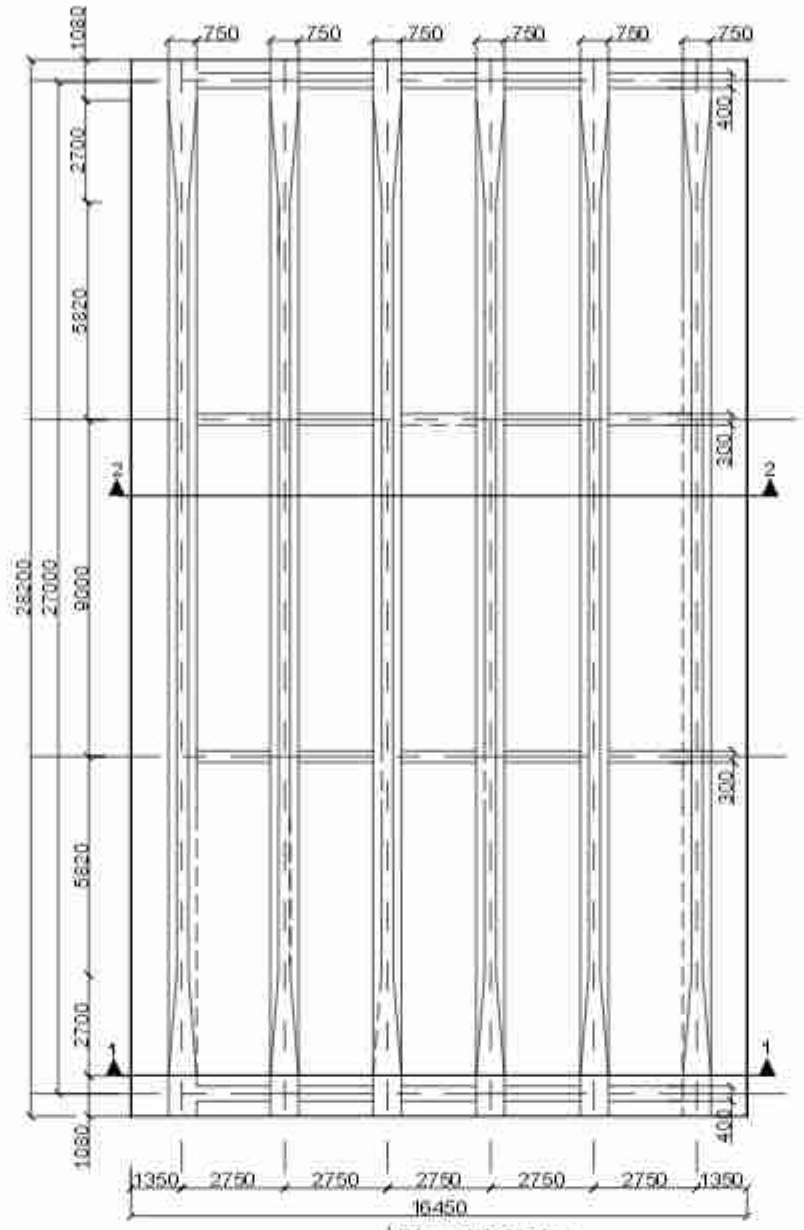

Plan Of Girder
Scale:-1:200

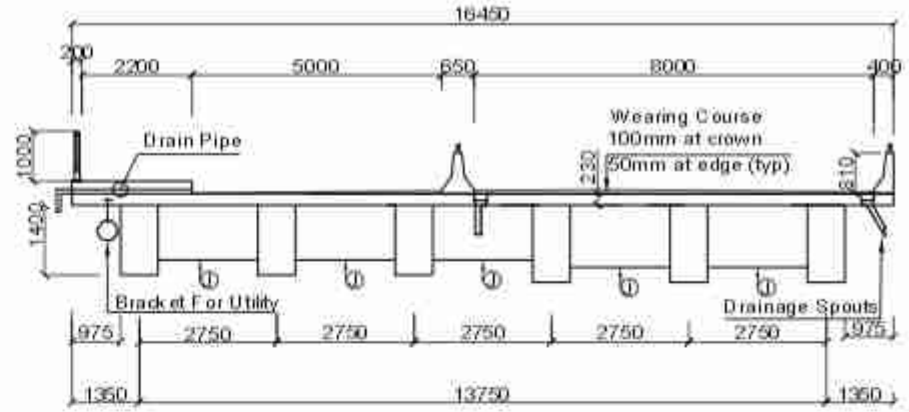

Section At 1-1
Scale:-1:150

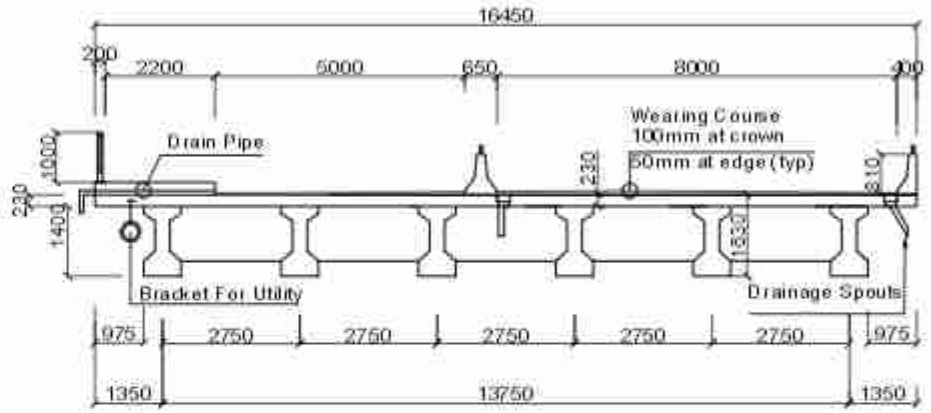

Section At 2-2
Scale:-1:150

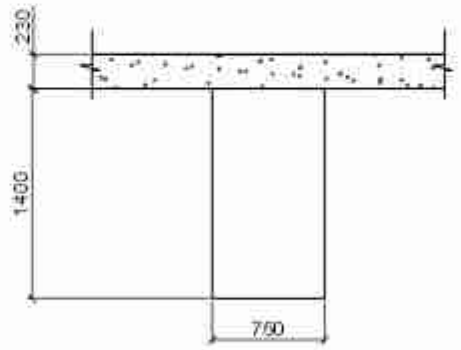

Section 1-1 Main Girder
Scale:-1:50

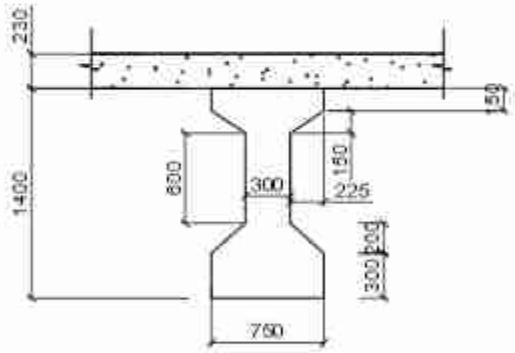

Section 2-2 Main Girder
Scale:-1:50

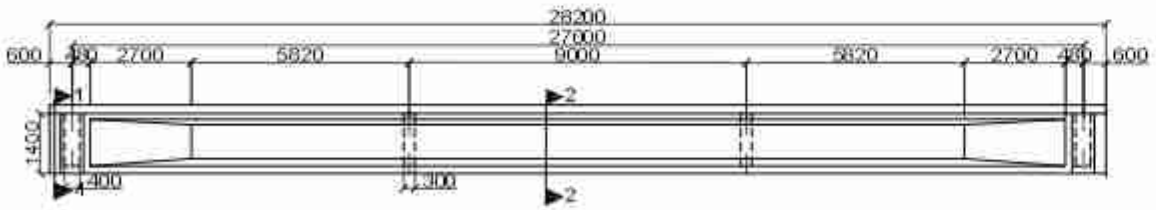

Longitudinal Sectional Elevation
Scale:-1:200

NOTE:
For maintenance, the deck shall be simultaneously jacked up at the locations marked "J".

NOTE:
The bridge has been designed to safely carry three driving lanes. If required in future the footpath can be used as driving lane, moving the crash barrier to the location of the hand-rails.

Government of Nepal Ministry of Physical Infrastructure and Transport **Department of Roads** **Project Directorate Office (ADB)** **SASEC Highway Improvement Project-** Project Preparatory Consultant (SHIP-PPC) ADB Loan No: 3722-NEP	**CONSULTANT:** Soosung Engineering Co. Ltd, Korea in association with ERMC P (Ltd) and Tech Studio of Engineering Nepal	**IMPLEMENTING AGENCY:** **DOR, DCID** **ROAD NAME:** **East West Highway (H01)** **Butwal - Gorusinghe Section**	**SHEET TITLE:** Detail of Superstructure of **Rajpur Bridge** (46/H001/295_A)	**SCALE:** As Shown		NAME	SIGNATURE	REV NO.	DESCRIPTION	DATE: November, 2022
					Designed by:	Saroj Bhattarai				DWG.NO.: 295_Rajpur
					Checked by:	P. Upadhyaya				SHEET NO.: 06/25
					Approved by:	Dr. T.H.Choi				

NOTE:

1.On Shear Connection:
The transverse bars of the deck slab(S2) shall be tied to vertical stirrups of the longitudinal girders.

2.Top Surface of the Main Girder:
Surface to be roughened by wire brush immediately after initial setting. The surface shall be properly cleaned by pressure blower prior to casting of the deck concrete

3.On Wearing Course:
The level of wearing course along the longitudinal direction shall be kept horizontal throughout the length of the deck. The thickness of wearing course towards the ends along the deck shall be increased suitably to compensate for the slope due to hogging of the girder by pre stress.

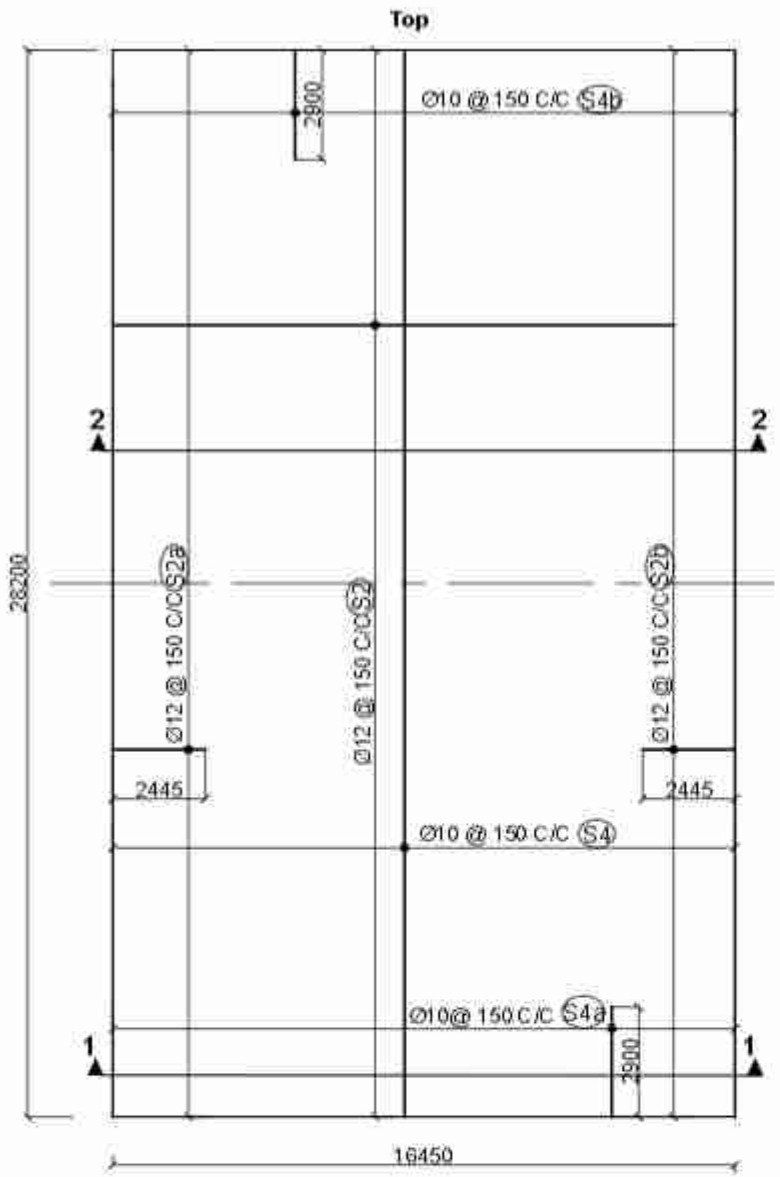

Reinforcement Details Of Deck Slab (Top Face)
Scale:-1:200

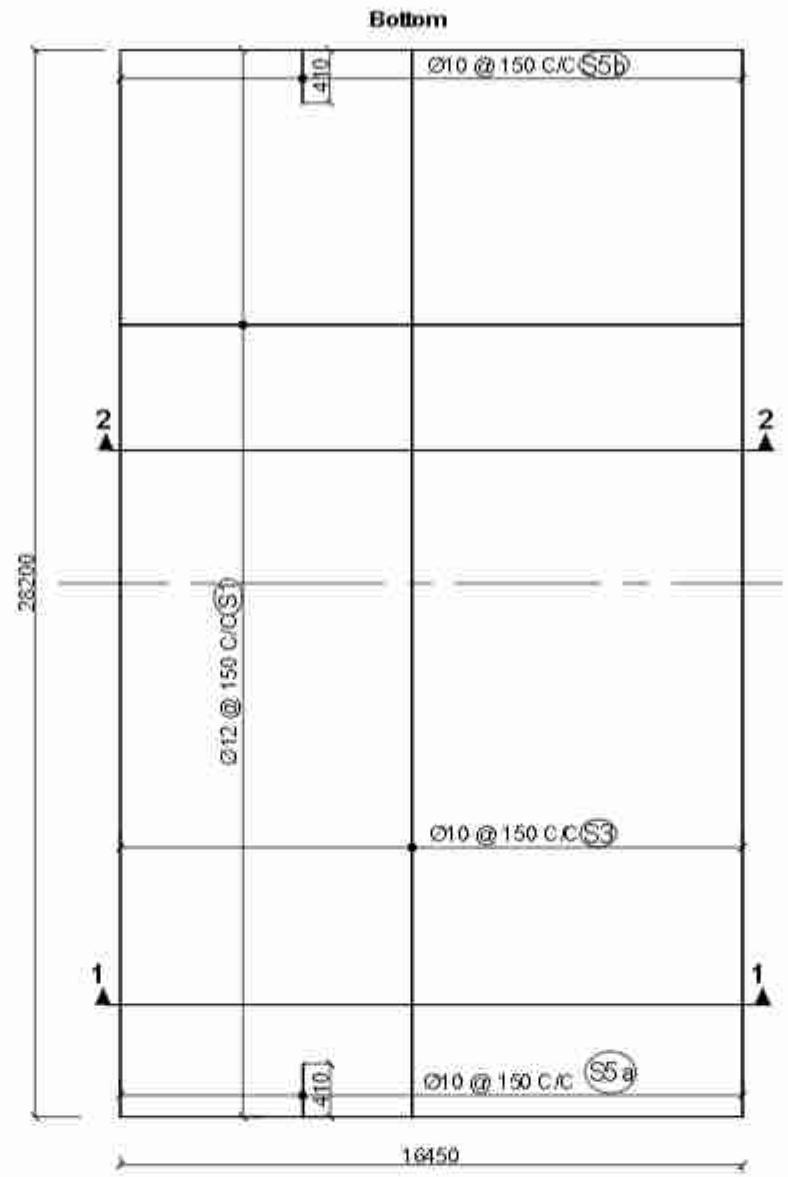

Reinforcement Details Of Deck Slab(Bottom Face)
Scale:-1:200

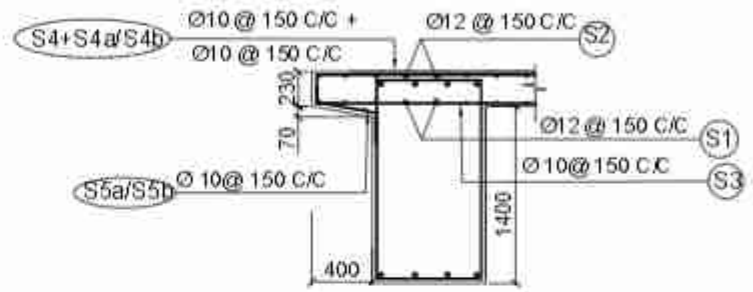

Reinforcement Details at Deck Extension
(Between The Main Girder)

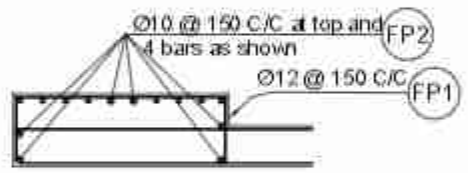

Reinforcement Details At Footpath
Scale:-1:50

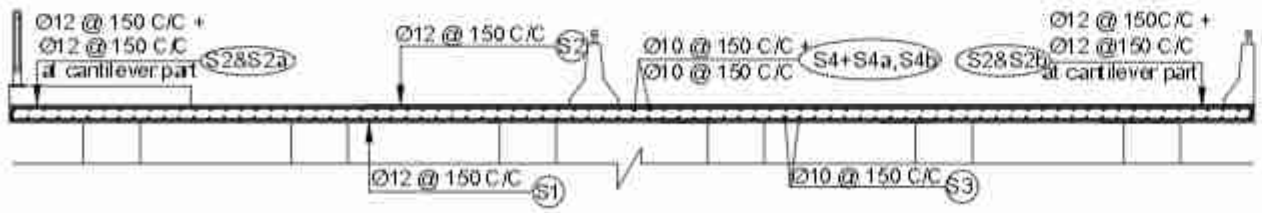

Section At 1-1
Scale:-1:100

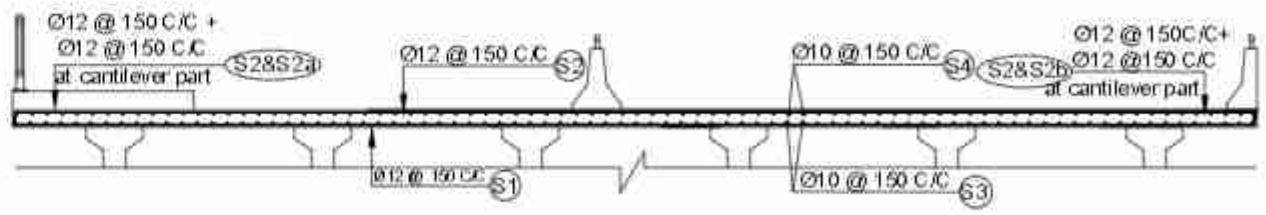

Section At 2-2
Scale:-1:100

Government of Nepal Ministry of Physical Infrastructure and Transport **Department of Roads** **Project Directorate Office (ADB)** **SASEC Highway Improvement Project-** **Project Preparatory Consultant (SHIP-PPC)** **ADB Loan No: 3722-NEP**	**CONSULTANT:** Soosung Engineering Co. Ltd, Korea in association with ERMC P (Ltd) and Tech Studio of Engineeering Nepal	**IMPLEMENTING AGENCY:** **DOR, DCID**	**SHEET TITLE:**	**SCALE:**		NAME	SIGNATURE	REV NO.	DESCRIPTION	DATE: November , 2022
		ROAD NAME: **East West Highway (H01)**	Reinforcement Details of Slab of **Rajpur Bridge** (46/H001/295_A)	As Shown	Designed by:	Saroj Bhattarai				DWG.NO.: 295_Rajpur
					Checked by:	P. Upadhyaya				
		Butwal - Gorusinghe Section			Approved by:	Dr. T.H.Choi				SHEET NO.: 07/25

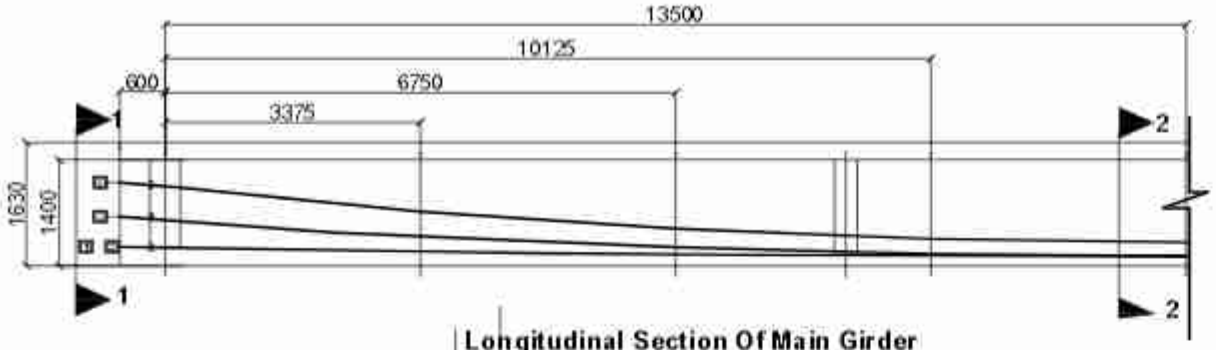

Longitudinal Section Of Main Girder
Scale:- 1:100

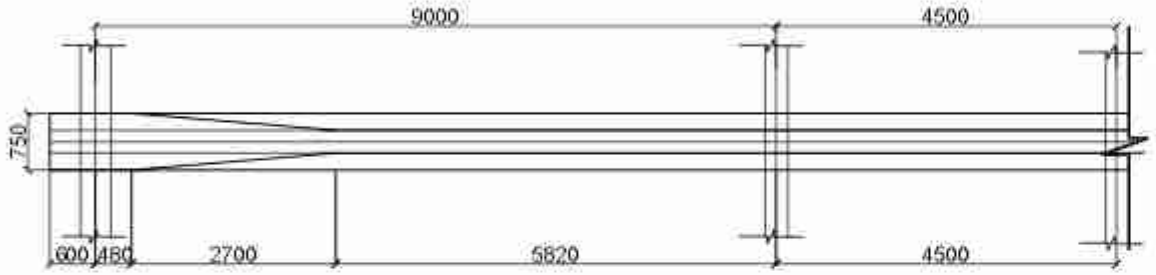

Plan Of Main Girder
Scale:- 1:100

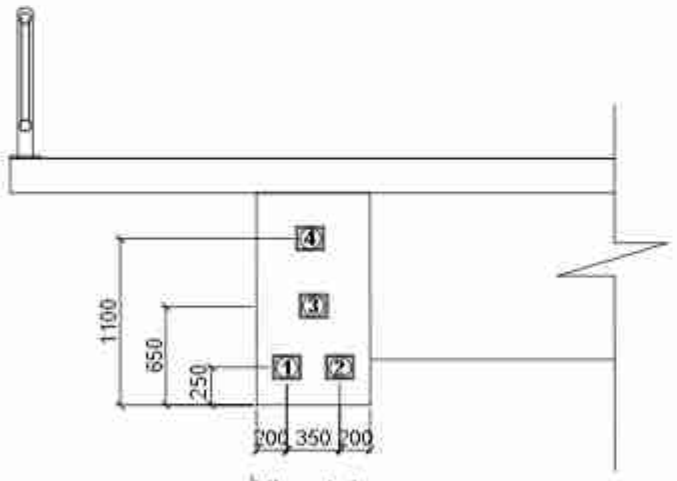

View 1-1
Scale:- 1:50

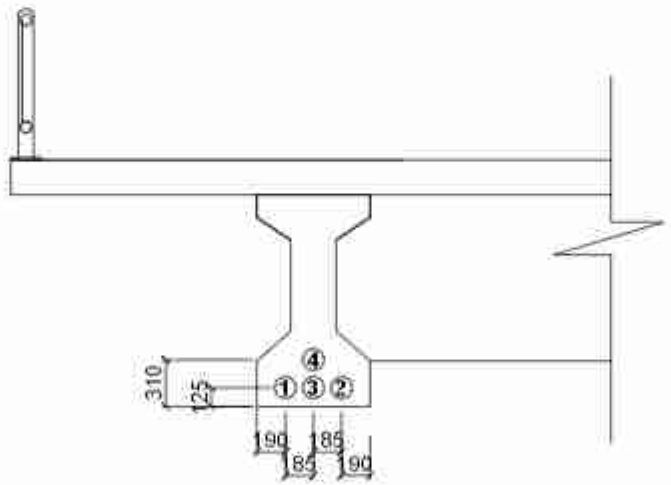

View 2-2
Scale:- 1:50

Tendon Layout Data

	Anchor face		Bearing centre line		Intermediate sections						Mid span	
	-600		0		3375		6750		10125		13500	
TENDON	Y	Z	Y	Z	Y	Z	Y	Z	Y	Z	Y	Z
1	250	-175	240	-176	190	-180	154	-183	132	-185	125	-185
2	250	175	240	176	190	180	154	183	132	185	125	185
3	650	0	606	0	396	0	245	0	155	0	125	0
4	1100	0	1034	0	717	0	491	0	355	0	310	0
5	0	0	0	0	0	0	0	0	0	0	0	0
Dummy	0	0	0	0	0	0	0	0	0	0	0	0

Y = Elevation of the tendon center from the girder soffit
Z = Horizontal distance of the tendon center from the centerline of the girder

Tendon Elongation and Emergence Angles			
TENDON	Total Jacking Force KN	Total Extension of both sides	Emergence angle degree
1	2600	198	1.019
2	2600	198	1.019
3	2600	197	4.256
4	2600	196	6.392
5	N/A	0	0.000
Dummy			0.000

NOTES ON PRE STRESSING:

1. All the prestressing operation shall commence after 28 days of casting,confirming that the cube specimen has achieved 100% of the prescribed compressive strength(M45) no early prestressing allowed.
2. Each prestressing tendon shall be multi-strand cable comprising of 19 strands,each strand of 12.7mm diameter (19k13),7 ply low relaxation,class-ii high tensile steel conforming is:14268-2017. Maximum allowed total jacking force = 2733KN
3. Prestressings operation shall be done in 2 stages as following order:

   Stage1

   Precast girder only. After 28days of Casting.

   Tendons to be stressed in stage 1 shall be in the following Sequence:

4	3	-	-	-	-	-	-

   Total jacking force to each tendon in stage 1= 2600KN

   Stage2

   After 14 days of casting of desk slab.

   Tendons to be stressed in stage 2 shall be in the following sequence:

1	2	-	-	-	-	-	-

   Total jacking force to each tendon in stage 2= 2600KN

   Casting of footpath,crash barriers and wearing course will done only after second stage prestressing.
4. Jacking of tendons shall be done from both ends. All the prestress losses(instant and long term) have been already considered in the design.
5. The composite action is considered only for live loads. There shall be no false work or props to the girder during 2nd stage of prestressing.The formwork for deck slab can be supported on the main precast girders.
6. The cable elongation at their jacking ends,mentioned are based on the assumption that the Modulus of Elasticity of the cable steel is 1.95x10^5 Mpa.The manufacturers specification shallbe followed if provided.
7. The tendon ducts shall be properly secured to the rebars to maintain the profile throughout concreting process.
8. The specified profile and alignments of the tendon shall be strictly maintained.If required,the reinforcement bars can be suitably repositioned or slightly bent to accommodate the tendons as per the engineers instruction.

NOTES ON DUMMY CABLE

The cable marked "D" is for future tensioning or in case of emergency or excessive prestress loss. No tendon shall be provided during construction but the sheating,anchorage block ,brusting reinforcement similar to the other tendons shall be properly installed. The duct shall be left hollow ensuring it is free of debris inside. The anchorage should be capped suitably to keep it free from ingress of foreign material and marked "D" to identify in future.

Government of Nepal Ministry of Physical Infrastructure and Transport **Department of Roads** **Project Directorate Office (ADB)** **SASEC Highway Improvement Project-** **Project Preparatory Consultant (SHIP-PPC)** **ADB Loan No: 3722-NEP**	**CONSULTANT:** Soosung Engineering Co. Ltd, Korea in association with ERMC P. (Ltd) and Tech Studio of Engineeering Nepal	**IMPLEMENTING AGENCY:** **DOR, DCID** **ROAD NAME:** **East West Highway (H01)** **Butwal - Gorusinghe Section**	**SHEET TITLE:** Prestressing Details of Main Girder of **Rajpur Bridge** (46/H001/295_A)	**SCALE:** As Shown		**NAME**	**SIGNATURE**	**REV NO.**	**DESCRIPTION**	**DATE:** November , 2022
					Designed by:	Saroj Bhattarai				**DWG.NO.:** 295_Rajpur
					Checked by:	P. Upadhyaya				
					Approved by:	Dr. T.H.Choi				**SHEET NO.:** 08/25

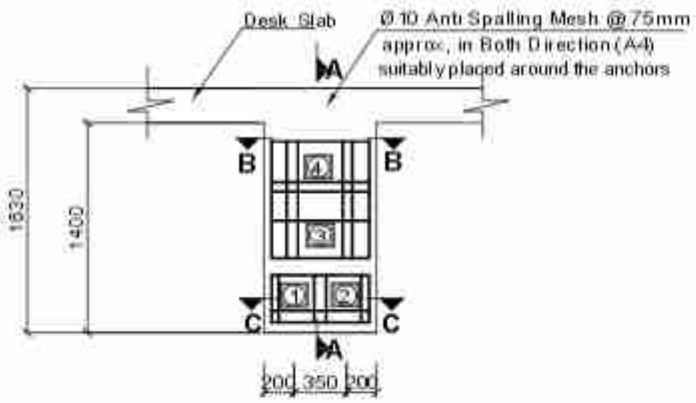

Anti Spalling Reainforcement
Scale:-1:50

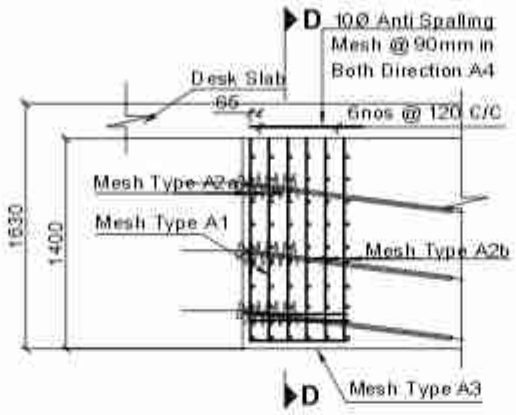

Section At A-A
Scale:-1:50

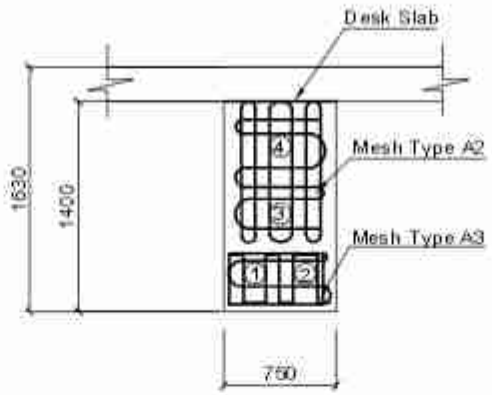

Section At D-D
Scale:-1:50

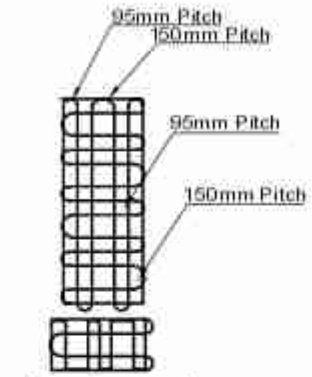

Near the Anchor

Mesh Type A2a
Scale:-1:50

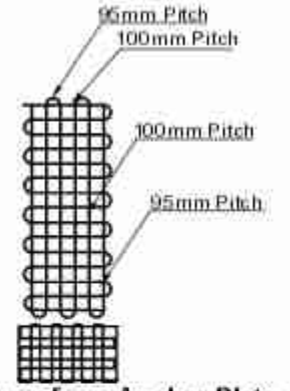

Away from Anchor Plate

Mesh Type A2b
Scale:-1:50

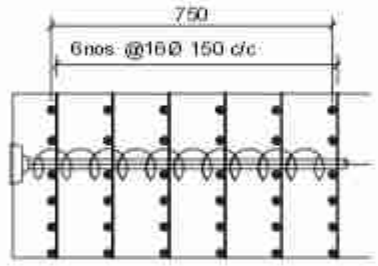

Section At B-B
Scale:-1:20

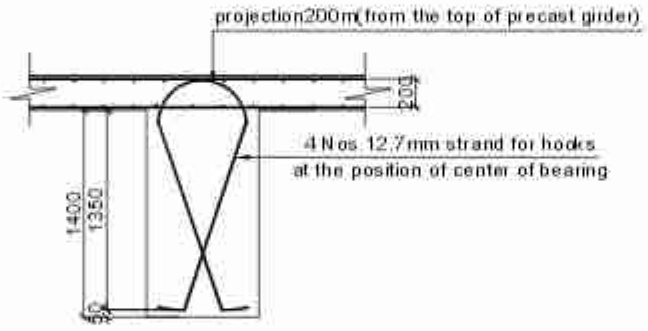

Hook Details At Both Ends Of Grider
Scale:-1:50

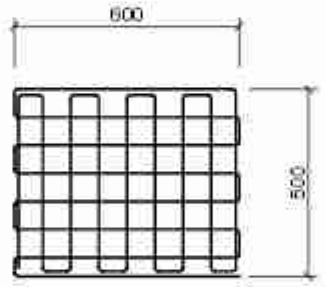

Pitch 75 bothways

Mesh Type A3
Scale:-1:20

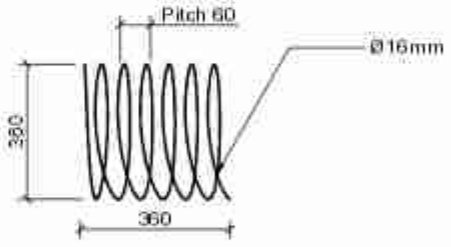

Typical Detail Of Spiral reainforcement A1
Scale:-1:20

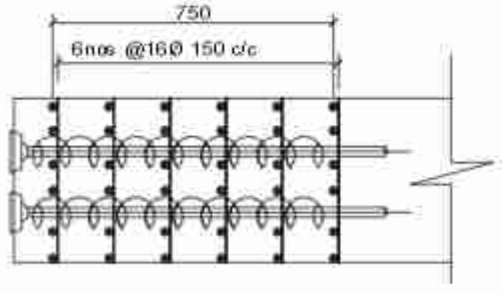

Section At C-C
Scale:-1:20

NOTE:
1. The pitch of the mesh should be adjusted to accommodate the anchors and to maintain the duct profile.
2. The spiral and mesh reinforcement shown is indicative, use the anchorage manufacturer's specification if provided.

Government of Nepal Ministry of Physical Infrastructure and Transport **Department of Roads** **Project Directorate Office (ADB)** **SASEC Highway Improvement Project-** Project Preparatory Consultant (SHIP-PPC) ADB Loan No: 3722-NEP	**CONSULTANT:** Soosung Engineering Co. Ltd, Korea in association with ERMC P (Ltd) and Tech Studio of Engineeering Nepal	**IMPLEMENTING AGENCY:** **DOR, DCID** **ROAD NAME:** **East\West Highway (H01)** **Butwal - Gorusinghe Section**	**SHEET TITLE:** Anchorage Details of **Rajpur Bridge** (46/H001/295_A)	**SCALE:** As Shown		NAME	SIGNATURE	REV NO.	DESCRIPTION	DATE: November , 2022 DWG.NO.: 295_Rajpur SHEET NO.: 09/25
					Designed by:	Saroj Bhattarai				
					Checked by:	P. Upadhyaya				
					Approved by:	Dr. T.H.Choi				

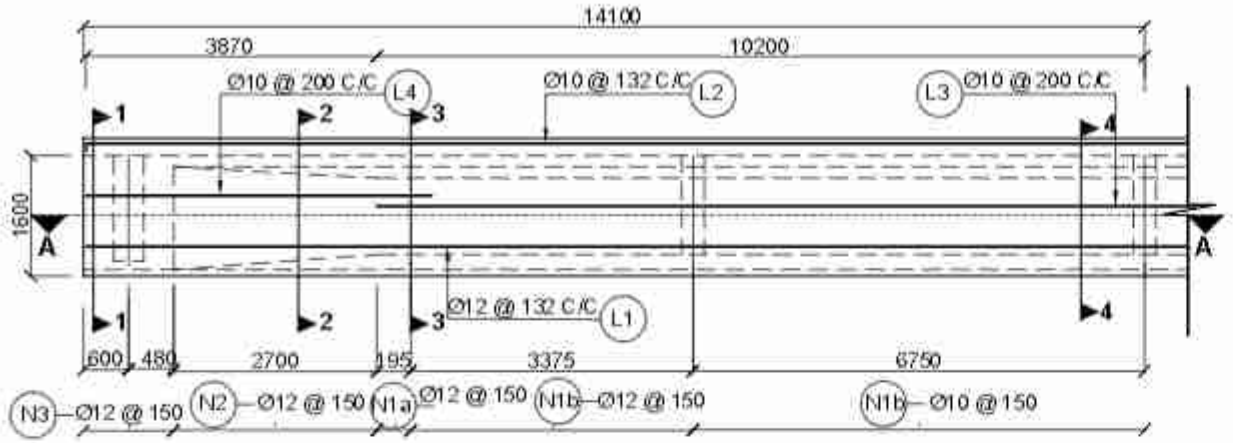

Longitudinal Sectional Elevation
Scale:-1:150

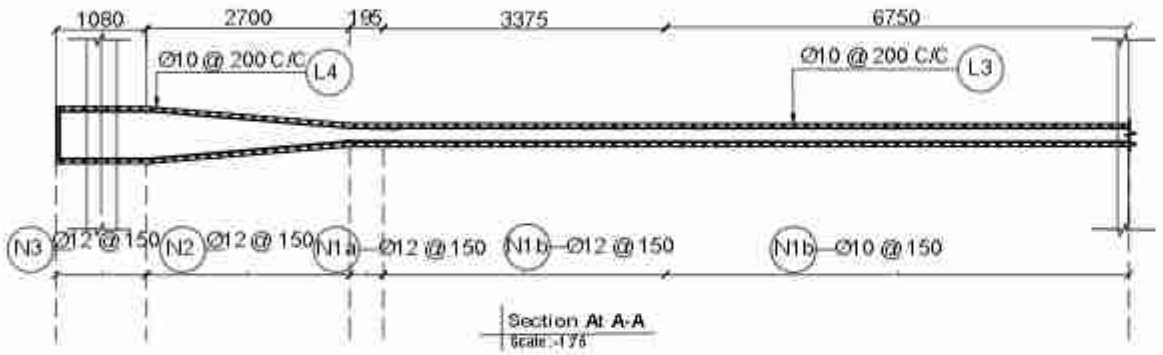

Section At A-A
Scale:-1:75

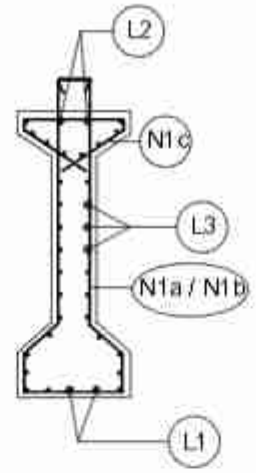

Typical Reinforcement of Precast Girder at Center

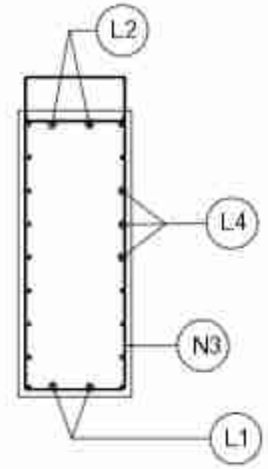

Typical Reinforcement of Precast Girder at End

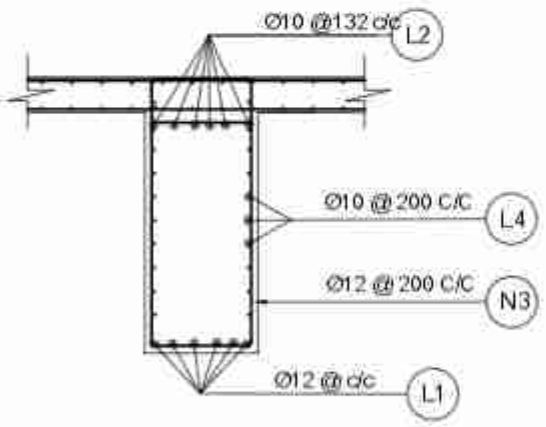

Section At 1-1
Scale:-1:50

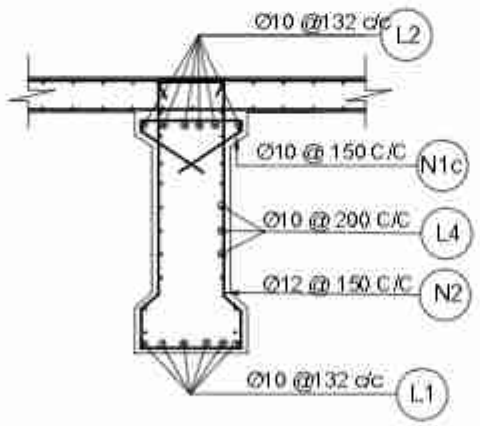

Section At 2-2
Scale:-1:50

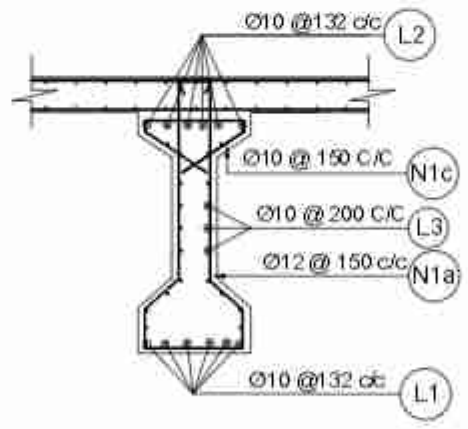

Section At 3-3
Scale:-1:50

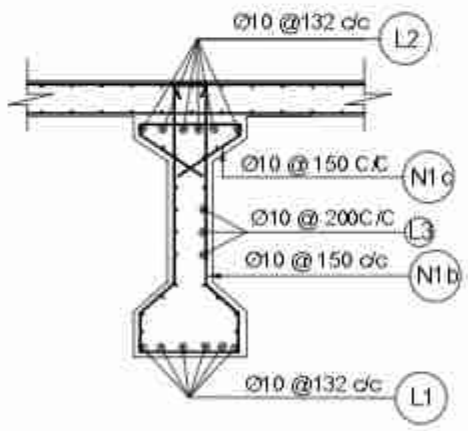

Section At 4-4
Scale:-1:50

NOTES:
The vertical stirrups of the main girder to be tied to the transverse reinforcement of the slab.

Government of Nepal Ministry of Physical Infrastructure and Transport **Department of Roads** **Project Directorate Office (ADB)** **SASEC Highway Improvement Project-** **Project Preparatory Consultant (SHIP-PPC)** **ADB Loan No: 3722-NEP**	**CONSULTANT:** Soosung Engineering Co. Ltd, Korea in association with ERMC P (Ltd) and Tech Studio of Engineering Nepal	**IMPLEMENTING AGENCY:** **DOR, DCID** **ROAD NAME:** **East West Highway (H01)** **Butwal - Gorusinghe Section**	**SHEET TITLE:** Untensioned Reinforcement Details of Girder of **Rajpur Bridge** (46/H001/295_A)	**SCALE:** As Shown		NAME	SIGNATURE	REV NO.	DESCRIPTION	DATE: November , 2022
					Designed by:	Saroj Bhattarai				DWG.NO.: 295_Rajpur
					Checked by:	P. Upadhyaya				SHEET NO.: 10/25
					Approved by:	Dr. T.H.Choi				

BAR BENDING SCHEDULE OF MAIN GIRDER

BAR ID	SHAPE OF BAR IN mm (NOT TO SCALE)	SPACING (MM)	Ø OF BARS (mm)	NO. OF BARS	LENGTH (m)	WEIGHT/LENGTH (kG/m)	TOTAL WEIGHT (kG)
N1a	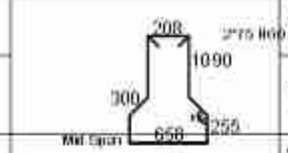	VARIES	12	50	4.510	0.888	200.203
N1b		VARIES	10	92	4.510	0.617	255.814
N1c	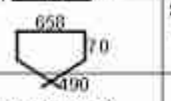	SPACING AS PER N1	10	142	1.780	0.617	155.836
N2	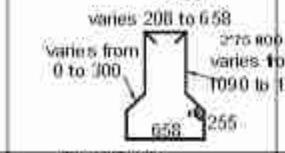	150	12	36	4.860	0.888	155.332
N2c	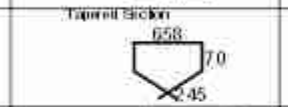	150	10	36	1.290	0.617	28.632
N3	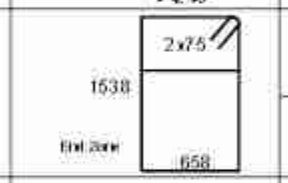	150	12	16	4.540	0.888	64.491
		150	10	16	0.778	0.617	7.675
L1	28120	132	12	6	28.120	0.888	149.792
L2	Hor. Long Bar at Bottom of Girder 28120 100	132	10	6	28.120	0.617	104.022
L3	Hor. Long Bar at top of Precast Girder 20640	200	10	18	20.640	0.617	229.057
L4	Hor. Long Bar at Side Mid Zone 1040 27.10 650 600 200	10	36	5.000	0.617	110.977	
A1	Hor. Long Bars at Side (End Zone) PITCH=60 max 360	VARIES	16	8	7.930	1.578	100.130
		(Use Manufacturer's specifications if available)					
A2	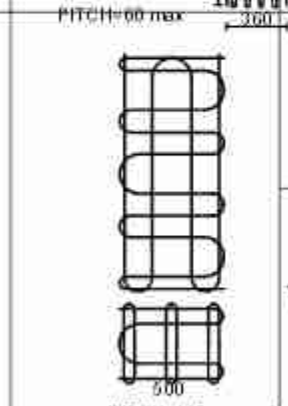	150	16	12	15.440	1.578	292.435
		(Use Manufacturer's specifications if available) The Sketch shown here is indicative, for he purpose of estimate only. The pitch of the bars to be adjusted as per the tendon's size and positions					

BAR BENDING SCHEDULE OF MAIN GIRDER

BAR ID	SHAPE OF BAR IN mm (NOT TO SCALE)	SPACING (MM)	Ø OF BARS (mm)	NO. OF BARS	LENGTH (m)	WEIGHT/LENGTH (kG/m)	TOTAL WEIGHT (kG)
A3	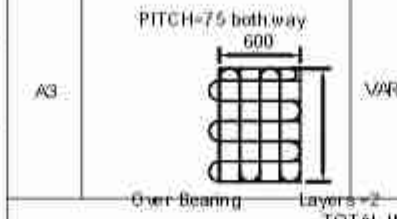	VARIES	10	4	10.200	0.617	25.155
TOTAL IN ONE GIRDER							1879.551
TOTAL IN ONE GIRDER (IN METRIC TON)							1.880

BAR BENDING SCHEDULE OF DECK SLAB

BAR ID	SHAPE OF BAR IN mm (NOT TO SCALE)	SPACING (MM)	Ø OF BARS (mm)	NO. OF BARS	LENGTH (m)	WEIGHT/LENGTH (kG/m)	TOTAL WEIGHT (kG)
S1	16370 100	150	12	194	16.570	0.888	2853.956
S2	16370 100	150	12	189	16.570	0.888	2780.401
S2a	100 2445 Additional Bars At Left Cantilever	150	12	189	2.550	0.888	427.883
S2b	2445 100 Additional Bars At Right Cantilever	150	12	189	2.550	0.888	427.883
S3	28110 55	MID DECK 150	10	111	28.420	0.617	1944.946
		LEFT CANT. 150	10	8	28.420	0.617	140.176
		RIGHT CANT. 150	10	8	28.420	0.617	140.176
S4	28110 55	150	10	111	28.420	0.617	1944.946
S4a	155 2900 Additional Top Bars At Deck End Left	150	10	111	3.055	0.617	209.071
S4b	2900 155 Additional Top Bars At Deck End right	150	10	111	3.055	0.617	209.071
S5a	100 410 200 For extended Deck Left End	150	10	98	0.710	0.617	42.899
S5b	100 410 200 For extended Deck Right End	150	10	98	0.710	0.617	42.899
TOTAL EXCLUDING FOOTPATHS KG							11164.368
TOTAL WEIGHT IN METRIC TON							11.164

BAR BENDING SCHEDULE OF RAISED FOOTPATH

BAR ID	SHAPE OF BAR IN mm (NOT TO SCALE)	SPACING (MM)	Ø OF BARS (mm)	NO. OF BARS	LENGTH (m)	WEIGHT/LENGTH (kG/m)	TOTAL WEIGHT (kG)
FP1	2320 2*90 400	150	12	189	5.040	0.888	946.377
FP2	28110	150	10	21	28.110	0.617	363.949
ONE SIDE							1310.326
TOTAL WEIGHT IN METRIC TON							1.310

BAR BENDING SCHEDULE OF INTERMEDIATE CROSS GIRDER

BAR ID	SHAPE OF BAR IN mm (NOT TO SCALE)	SPACING (MM)	Ø OF BARS (mm)	NO. OF BARS	LENGTH (m)	WEIGHT/LENGTH (kG/m)	TOTAL WEIGHT (kG)
MC1	400 400 14395	50	25	4	15.195	3.853	234.208
MC2	14395 400 400	200	20	2	15.195	2.466	74.948
MC3	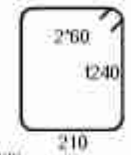 2 Legged @200MM C/C	200	10	69	3.020	0.617	128.474
MC4	13970 295 mm. each face	300	10	10	13.970	0.617	86.130
TOTAL IN ONE GIRDER							523.759
TOTAL IN 2 GIRDER (IN METRIC TON)				2			1.048

BAR BENDING SCHEDULE OF END CROSS GIRDER

	BAR ID	SHAPE OF BAR IN mm (NOT TO SCALE)	SPACING (MM)	Ø OF BARS (mm)	NO. OF BARS	LENGTH (m)	WEIGHT/LENGTH (kG/m)	TOTAL WEIGHT (kG)
	EC1	400 400 14395	75	25	4	15.195	3.853	234.208
	EC2	14395 400 400	150	25	6	15.195	3.853	351.312
	EC3	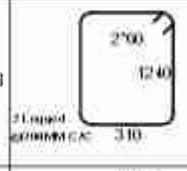 2 Legged @200MM C/C	200	10	73	3.220	0.617	144.924
	EC4	14070 295 mm. each face	300	10	10	14.070	0.617	86.747
	TOTAL IN ONE GIRDER							817.190
	TOTAL IN 2 GIRDER (IN METRIC TON)				2			1.634

Government of Nepal Ministry of Physical Infrastructure and Transport **Department of Roads** **Project Directorate Office (ADB)** **SASEC Highway Improvement Project-Project Preparatory Consultant (SHIP-PPC)** **ADB Loan No: 3722-NEP**	**CONSULTANT:** Soosung Engineering Co. Ltd, Korea in association with ERMC P (Ltd) and Tech Studio of Engineeering Nepal	**IMPLEMENTING AGENCY:** **DOR, DCID** **ROAD NAME:** **East West Highway (H01)** **Butwal - Gorusinghe Section**	**SHEET TITLE:** B.B.S of Slab & Main Girder of **Rajpur Bridge** (46/H001/295_A)	**SCALE:** As Shown		NAME	SIGNATURE	REV NO.	DESCRIPTION	DATE: November , 2022
					Designed by:	Saroj Bhattarai				DWG.NO.: 295_Rajpur
					Checked by:	P. Upadhyaya				
					Approved by:	Dr. T.H.Choi				SHEET NO.: 11.05

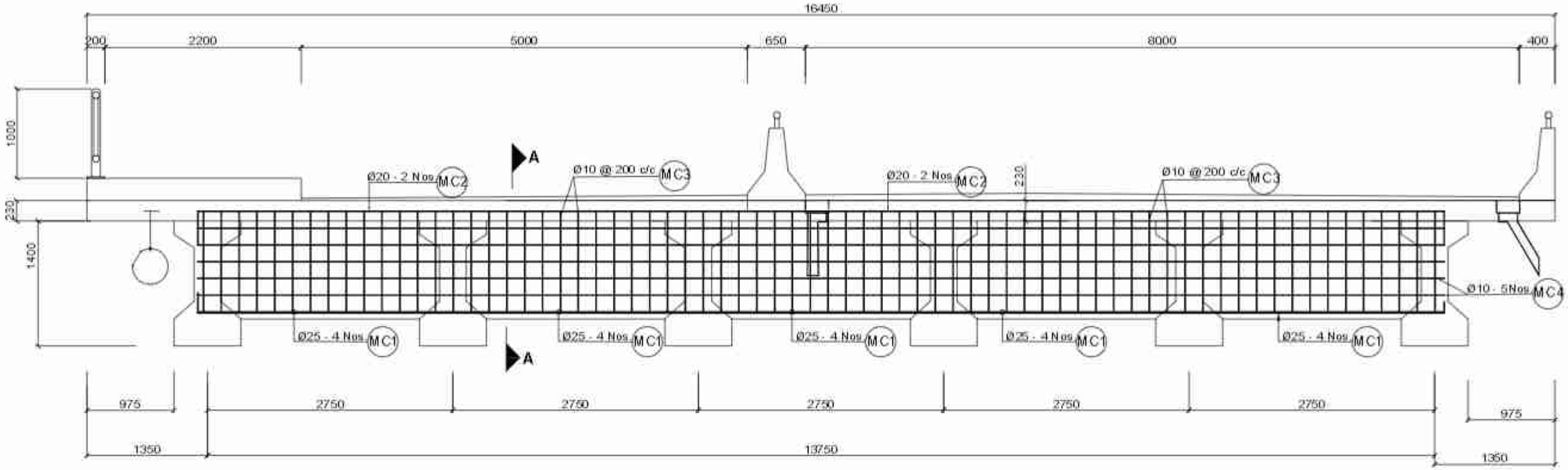

Intermediate Cross Girders
Scale:-1:50

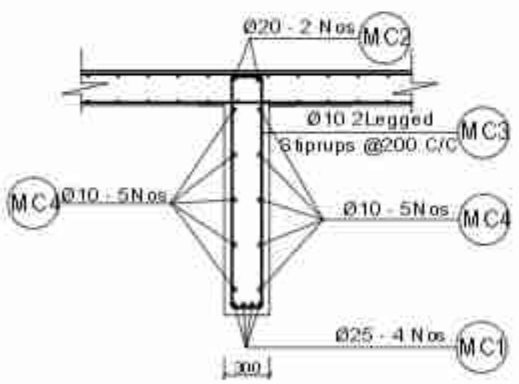

Section At A-A
Scale:-1:50

NOTES:
Dowel bars similar to the longitudinal bars of the cross girders shall be pre-installed in the precast main girder before casting. The longitudinal bars of the cross girder shall be lapped to the dowel bars, which shall have a lap length of 60 dia. of the corresponding bars.

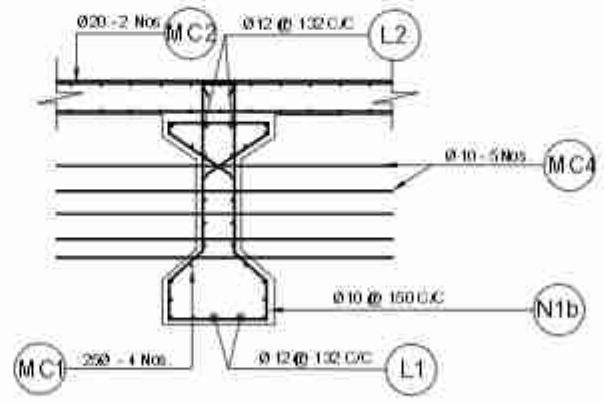

Dowel bar of Intermediate Cross Girder
Scale:-1:50

Government of Nepal Ministry of Physical Infrastructure and Transport **Department of Roads** **Project Directorate Office (ADB)** **SASEC Highway Improvement Project-** Project Preparatory Consultant (SHIP-PPC) ADB Loan No: 3722-NEP	**CONSULTANT:** Soosung Engineering Co. Ltd, Korea in association with ERMC P (Ltd) and Tech Studio of Engineeering Nepal	**IMPLEMENTING AGENCY:** **DOR, DCID** **ROAD NAME:** **East\West Highway (H01)** **Butwal - Gorusinghe Section**	**SHEET TITLE:** Reinforcement Details of Intermediate Cross Girder of **Rajpur Bridge** (48/H001/295_A)	**SCALE:** As Shown		NAME	SIGNATURE	REV NO.	DESCRIPTION	DATE: November , 2022
					Designed by:	Saroj Bhattarai				DWG.NO.: 295_Rajpur
					Checked by:	P. Upadhyaya				
					Approved by:	Dr. T.H.Choi				SHEET NO.: 12/24

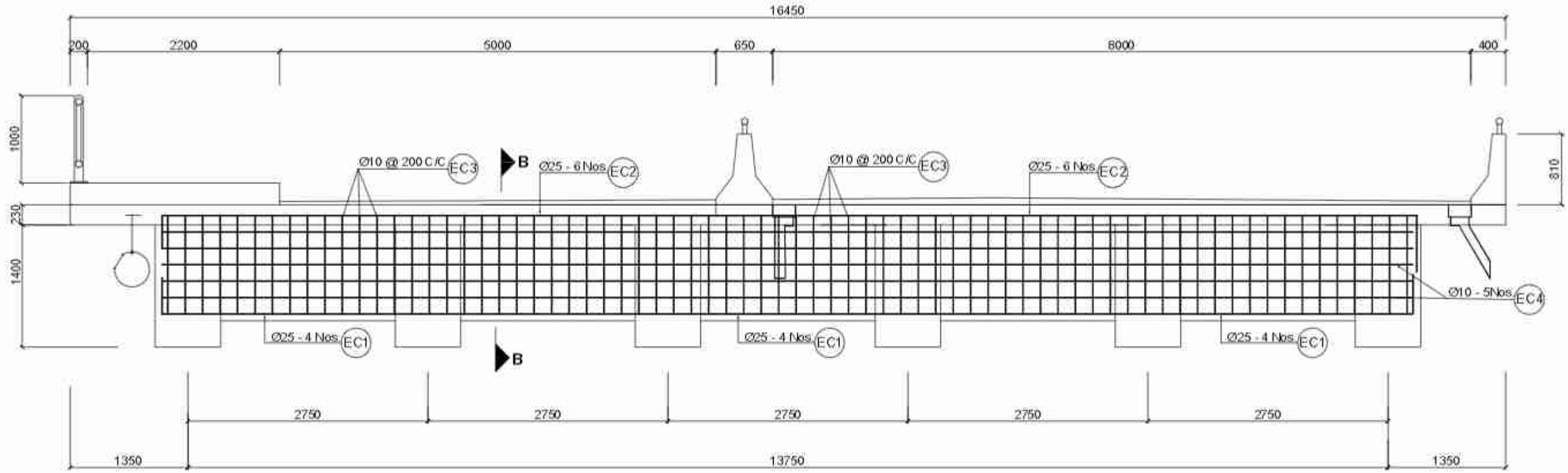

End Cross Girders
Scale:- 1:50

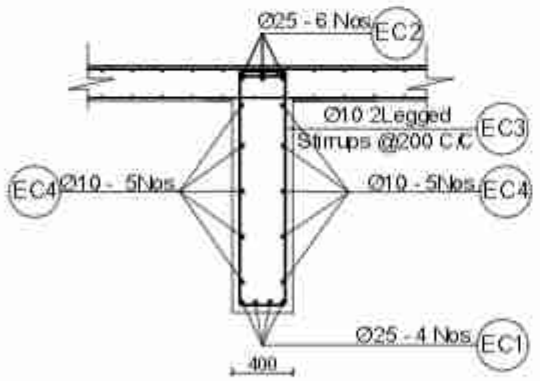

Section At B-B
Scale:- 1:50

NOTES:

Dowel bars similar to the longitudinal bars of the cross girders shall be pre-installed in the precast main girder before casting. The longitudinal bars of the cross girder shall be lapped to the dowel bars, which shall have a lap length of 60 dia. of the corresponding bars.

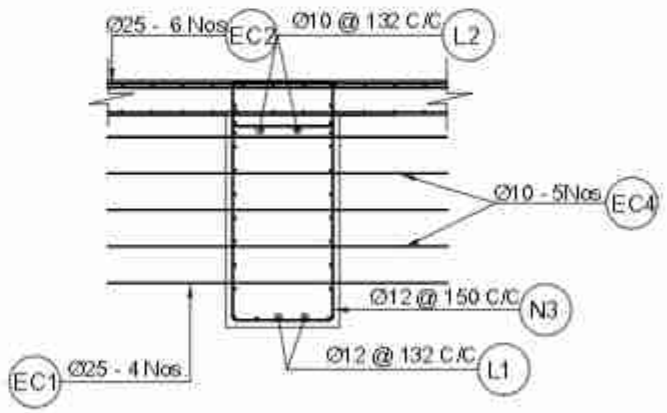

Dowel bar of End Cross Girder
Scale:- 1:50

Government of Nepal Ministry of Physical Infrastructure and Transport **Department of Roads** **Project Directorate Office (ADB)** **SASEC Highway Improvement Project-** **Project Preparatory Consultant (SHIP-PPC)** **ADB Loan No: 3722-NEP**	**CONSULTANT:** Soosung Engineering Co. Ltd, Korea in association with ERMC P. (Ltd) and Tech Studio of Engineeering Nepal	**IMPLEMENTING AGENCY:** **DOR, DCID**	**SHEET TITLE:** Reinforcement Details Of Cross Girder of Rajpur Bridge (46/H001/295_A)	**SCALE:** As Shown		NAME	SIGNATURE	REV NO.	DESCRIPTION	DATE: November , 2022
		ROAD NAME: **East West Highway (H01)**			Designed by:	Saroj Bhattara				DWG.NO.: 295_Rajpur
		Butwal - Gorusinghe Section			Checked by:	P. Upadhyaya				SHEET NO.: 13/25
					Approved by:	Dr. T.H.Choi				

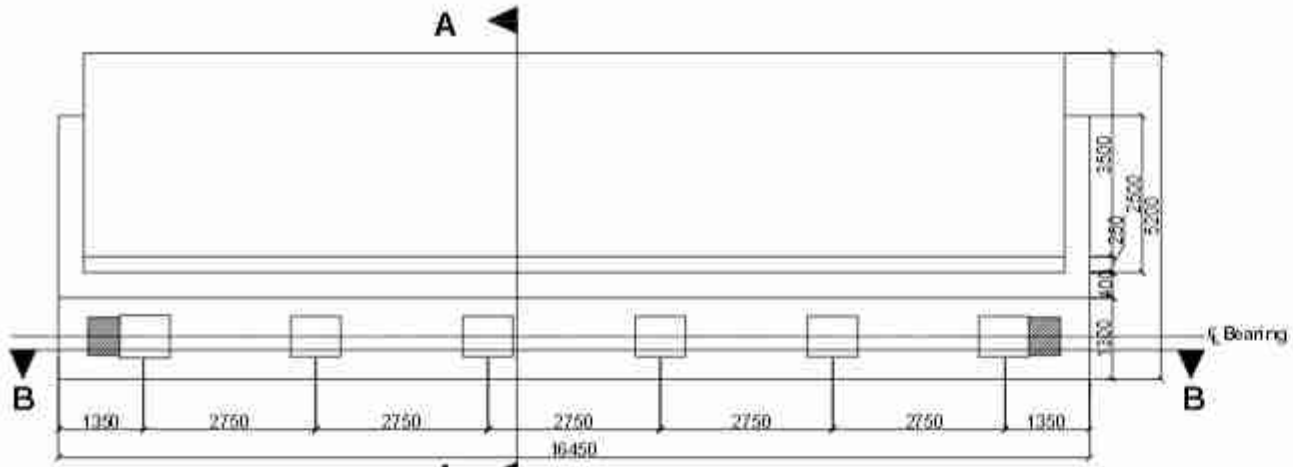

Plan Of Abutment
Scale :-1:100

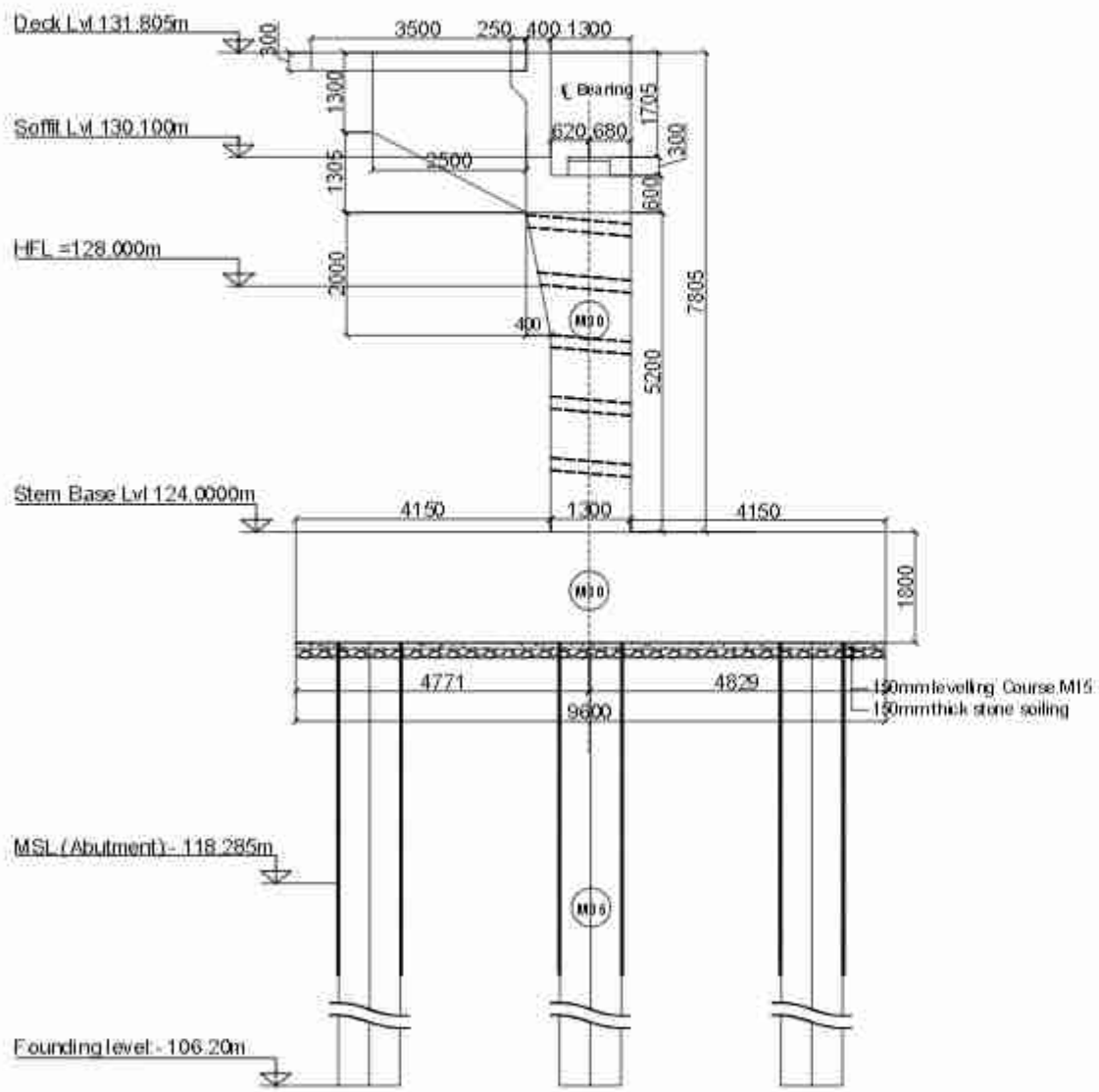

Section Of Abutment At (A-A)
Scale:-1:120

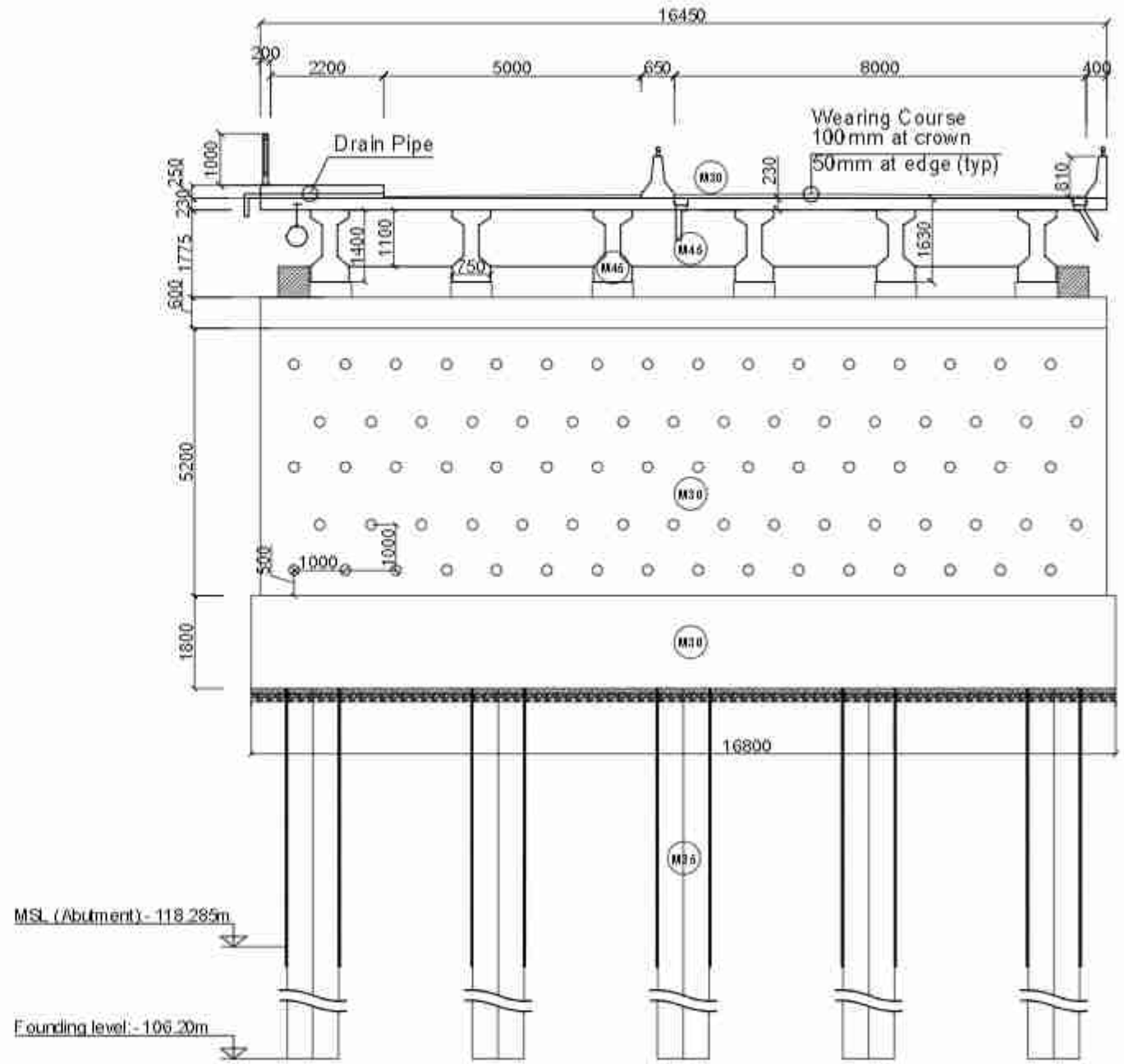

Section Of Abutment At (B-B)
Scale:-1:120

Government of Nepal Ministry of Physical Infrastructure and Transport **Department of Roads** **Project Directorate Office (ADB)** **SASEC Highway Improvement Project-** **Project Preparatory Consultant (SHIP-PPC)** **ADB Loan No: 3722-NEP**	**CONSULTANT:** Soosung Engineering Co. Ltd, Korea in association with ERMC P (Ltd) and Tech Studio of Engineering Nepal	**IMPLEMENTING AGENCY:** **DOR, DCID** **ROAD NAME:** **East West Highway (H01)** **Butwal - Gorusinghe Section**	**SHEET TITLE:** Detail of Abutment of **Rajpur Bridge** (46/H001/295_A)	**SCALE:** As Shown		NAME	SIGNATURE	REV.NO.	DESCRIPTION	DATE: November , 2022
					Designed by:	Saroj Bhattarai				DWG.NO.: 295_Rajpur
					Checked by:	P. Upadhyaya				
					Approved by:	Dr. T.H.Choi				SHEET NO.: 14/25

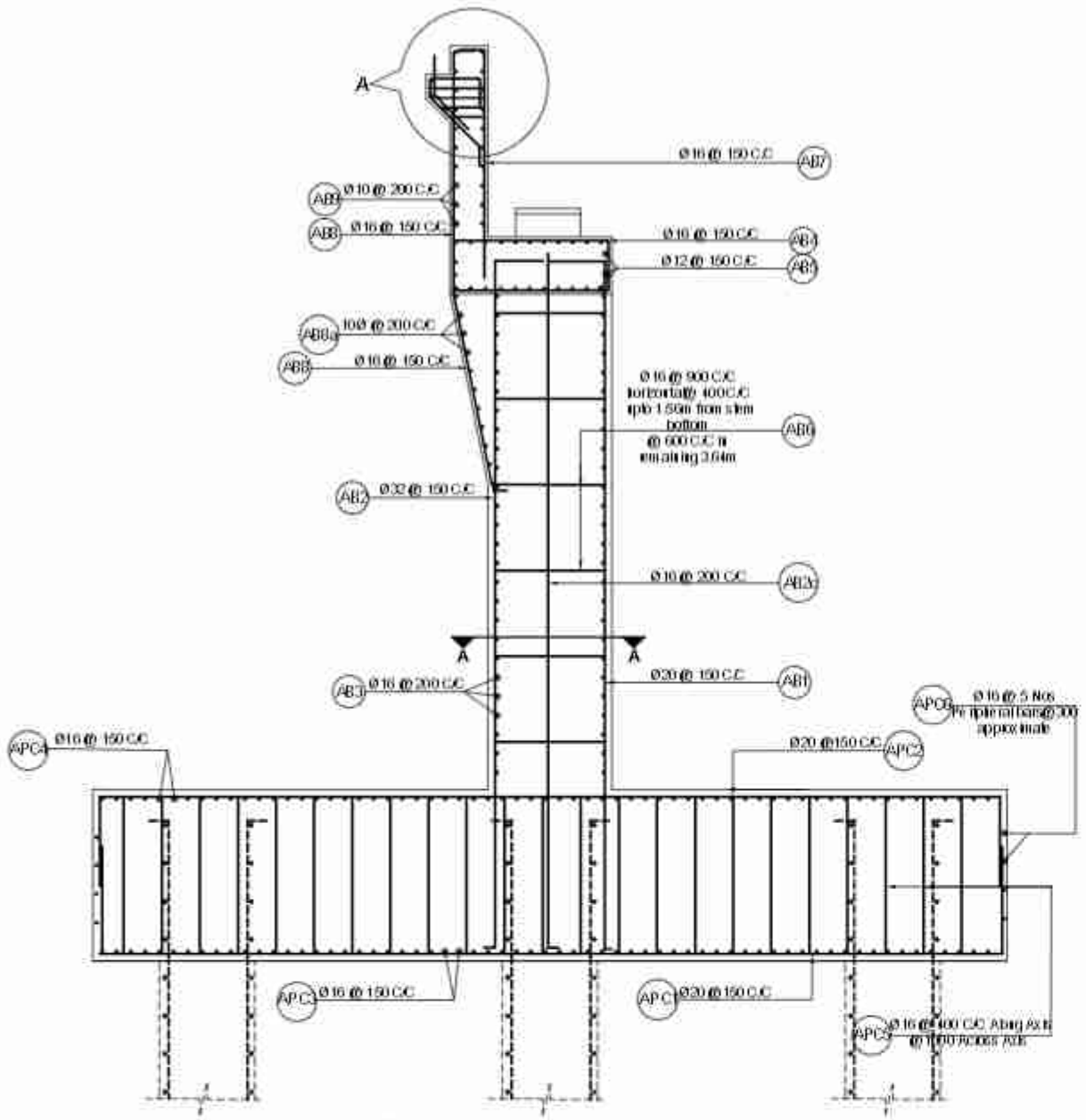

Reinforcement Details Of Abutment
Scale:-1:70

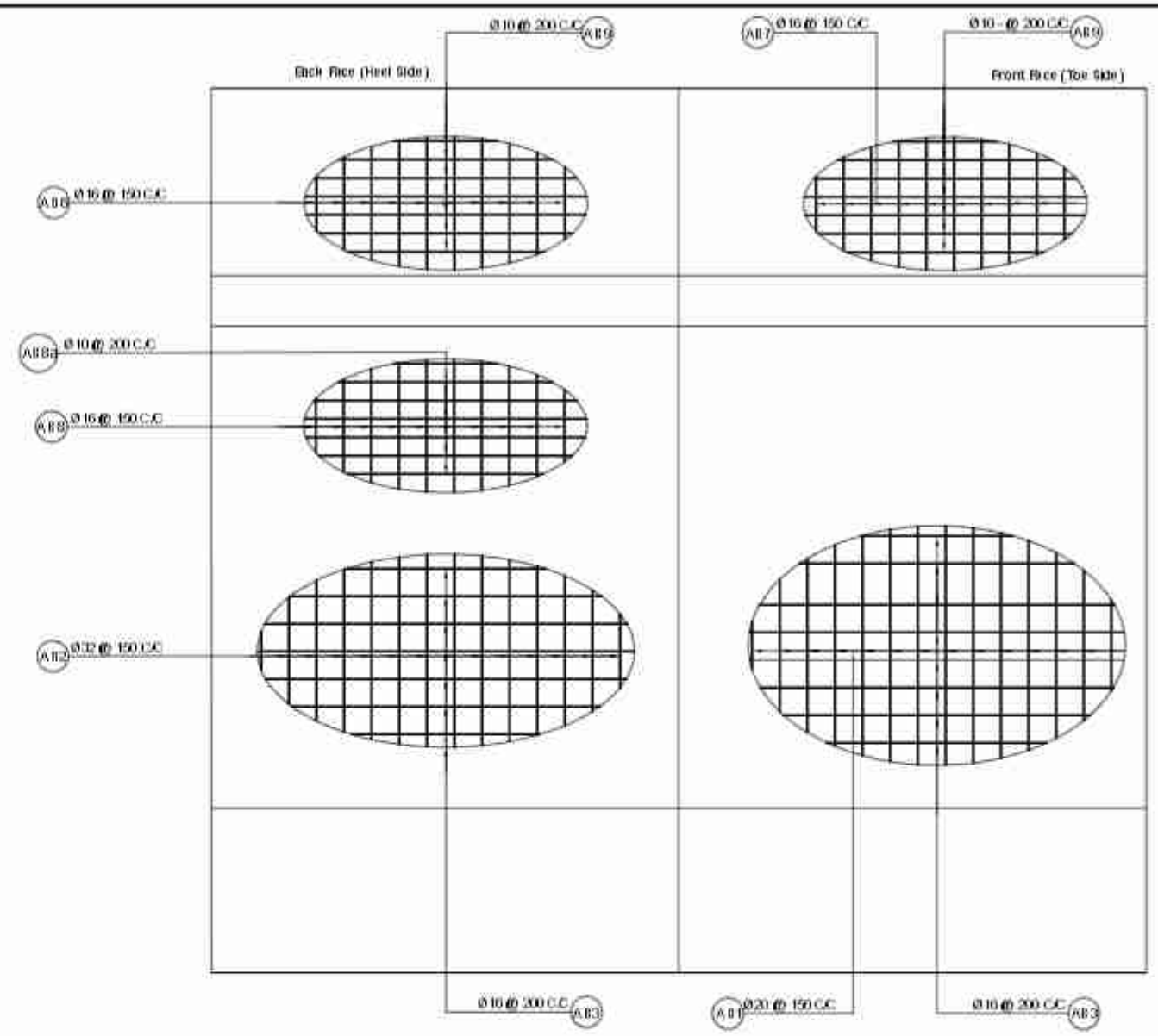

Reinforcement Details Of Abutment
Scale:-1:70

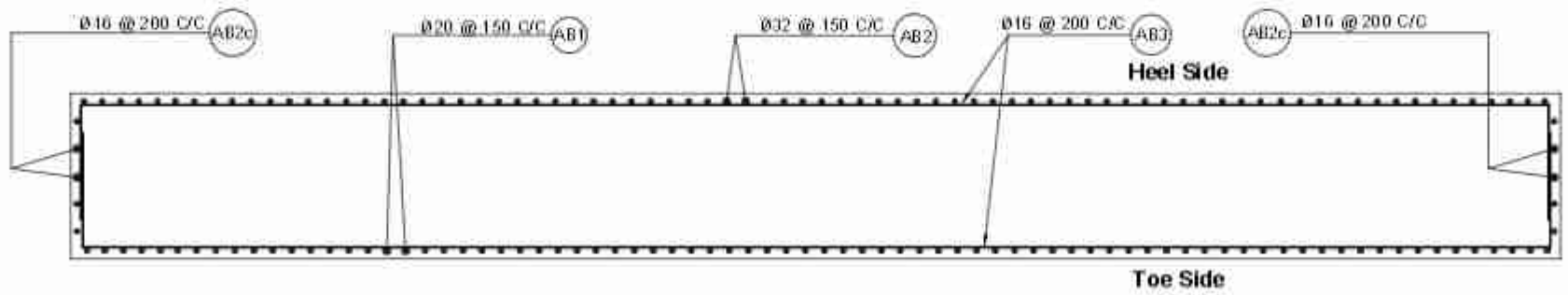

Section at A-A
Scale:-1:50

Government of Nepal Ministry of Physical Infrastructure and Transport **Department of Roads** **Project Directorate Office (ADB)** **SASEC Highway Improvement Project-** Project Preparatory Consultant (SHIP-PPC) ADB Loan No: 3722-NEP	**CONSULTANT:** Soosung Engineering Co. Ltd, Korea in association with ERMC P. (Ltd) and Tech Studio of Engineeering Nepal	**IMPLEMENTING AGENCY:** **DOR, DCID** **ROAD NAME:** **East West Highway (H01)** **Butwal - Gorusinghe Section**	**SHEET TITLE:** Reinforcement Details of Abutment of **Rajpur Bridge** (46/H001/295_A)	**SCALE:** As Shown		**NAME**	**SIGNATURE**	**REV NO.**	**DESCRIPTION**	**DATE:** November , 2022
					Designed by:	Saroj Bhattarai				**DWG.NO.:** 295_Rajpur
					Checked by:	P. Upadhyaya				
					Approved by:	Dr. T.H.Choi				**SHEET NO.:** 15/25

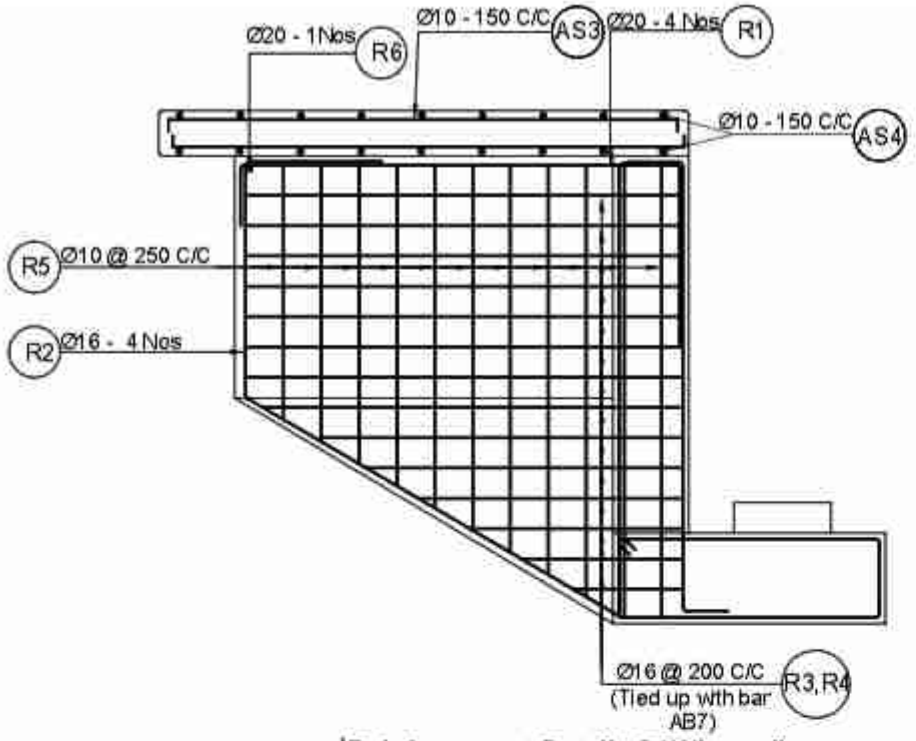

Reinforcement Details Of Wingwall
Scale:-1:50

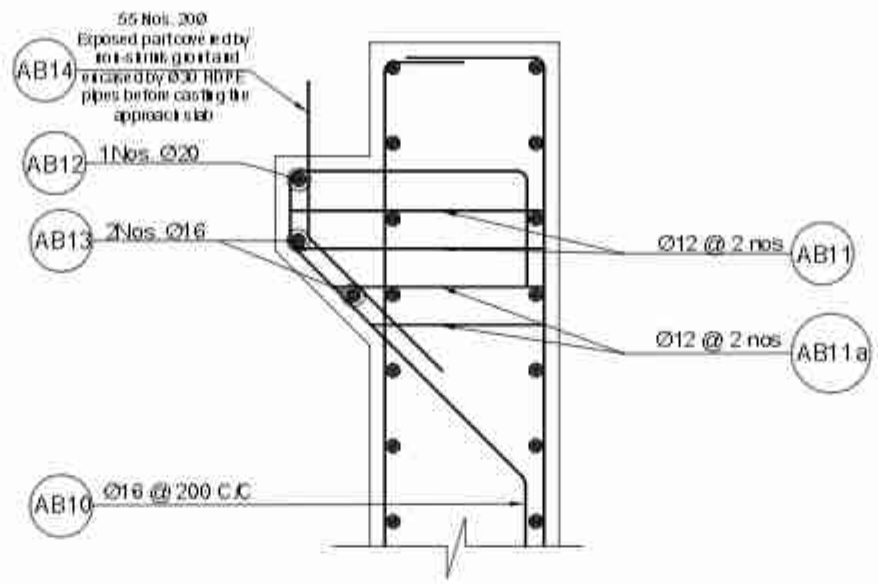

Detail At A
Scale:-1:20

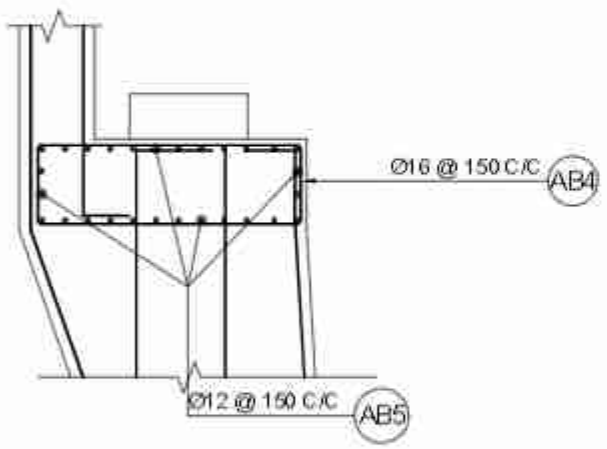

Reinforcement Details Of Abutment
Scale:-1:50

BAR BENDING SCHEDULE OF WING WALL

BAR ID	SHAPE OF BAR IN mm (NOT TO SCALE)	SPACING (MM)	Ø OF BARS (mm)	NO. OF BARS	LENGTH (m)	WEIGHT/LENGTH (KG/m)	TOTAL WEIGHT (KG)
R1	400 2807 1200		20	8	4.407	2.466	86.947
R2	300 1207 2825		16	8	4.332	1.578	54.699
R3	2714 214 2*150		16	14	6.156	1.578	136.028
R4	Avg 1350 214 2*150		16	14	3.428	1.578	75.748
R5	182 Avg 1953		10	22	4.570	0.617	61.987
R6	307		20	2	0.307	2.466	1.514
R7	2800		10	4	2.800	0.617	6.905
R8	350 260		10	16	1.320	0.617	12.207
TOTAL IN 2 WING WALL IN ONE ABUTMENT							436.035
TOTAL WEIGHT IN METRIC TON							0.436

BAR BENDING SCHEDULE OF ABUTMENT

BAR ID	SHAPE OF BAR IN mm (NOT TO SCALE)	SPACING (MM)	Ø OF BARS (mm)	NO. OF BARS	LENGTH (m)	WEIGHT/LENGTH (KG/m)	TOTAL WEIGHT (KG)
AB1	300 7300 500	150	20	110	8.100	2.466	2221.700
AB2	500 7300 500	150	32	110	8.300	6.313	5826.599
AB20	7300 500	200	16	12	7.800	1.578	149.437
AB3	16285 average 850 16285	200	16	56	34.270	1.578	3029.024
AB4	100 515 1535	150	16	111	4.300	1.578	753.342
AB5	16300	150	12	28	16.300	0.888	405.199
AB6	Length Varies 1135-1135 Spacing Hook Length 100 500 C/C horizontal 400 C/C vertical up to 1.50m from bottom 600 C/C vertical alternating 3.0m	16	210	1.583	1.578	524.688	
AB7	250 2605 300	150	16	110	3.155	1.578	547.763
AB8	300 3265 1166 300	150	16	110	5.120	1.578	888.921
AB8a	16300	200	10	12	16.300	0.617	120.595
AB9	16250 335	200	10	11	33.116	0.617	224.590
AB10	500 300 300 647 300	200	16	79	1.747	1.578	217.831
AB11	500 200 200		12	150	0.900	0.888	126.247
AB11a	250 average 200 300		12	150	0.650	0.888	91.179
AB12	16300		20	1	16.300	2.466	40.198
AB13	16300		16	2	16.300	1.578	51.454
AB14	400 500		20	55	0.900	2.466	122.075
TOTAL WEIGHT IN ONE ABUTMENT							15340.902
TOTAL WEIGHT IN METRIC TON							15.341

Government of Nepal Ministry of Physical Infrastructure and Transport **Department of Roads** **Project Directorate Office (ADB)** **SASEC Highway Improvement Project-** **Project Preparatory Consultant (SHIP-PPC)** **ADB Loan No: 3722-NEP**	**CONSULTANT:** Soosung Engineering Co. Ltd, Korea in association with ERMC P (Ltd) and Tech Studio of Engineeering Nepal	**IMPLEMENTING AGENCY:** **DOR, DCID** **ROAD NAME:** **East West Highway (H01)** **Butwal - Gorusinghe Section**	**SHEET TITLE:** BBS & Reinforcement Details of **Rajpur Bridge** (46/H001/295_A)	**SCALE:** As Shown		**NAME**	**SIGNATURE**	**REV NO.**	**DESCRIPTION**	**DATE:** November, 2022 **DWG.NO.:** 295_Rajpur **SHEET NO.:** 16/25
					Designed by:	Saroj Bhattara				
					Checked by:	P. Upadhyaya				
					Approved by:	Dr. T.H.Choi				

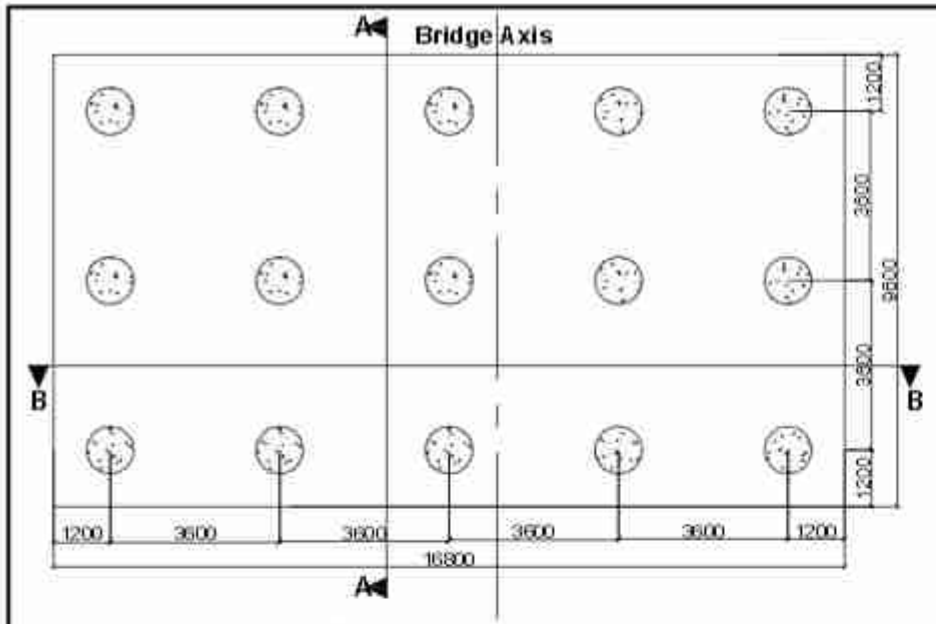

Plan Of Abutment Piles
Scale :-1:150

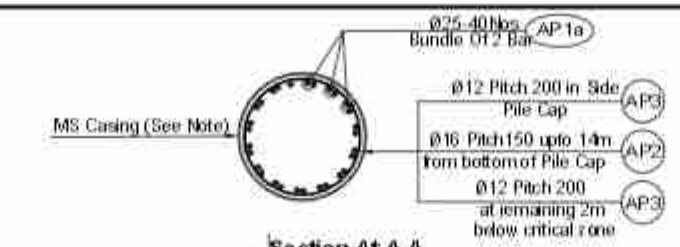

Section At A-A
Scale :-1:50

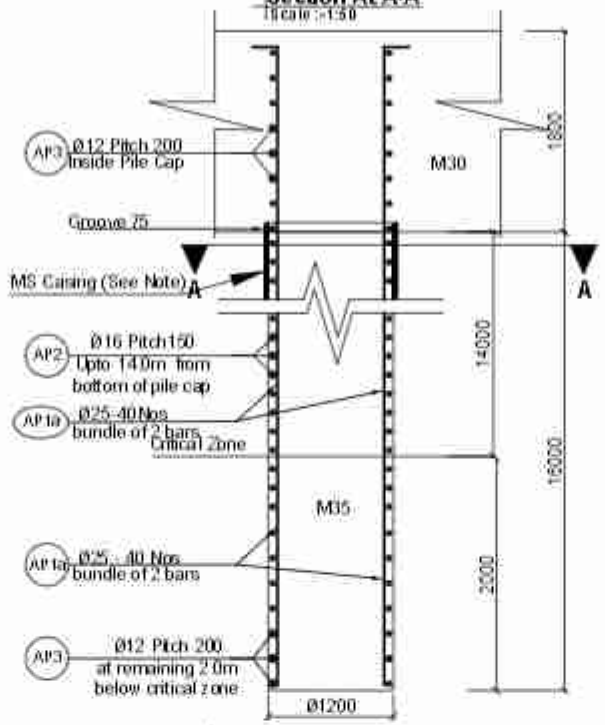

Reinforcement Details Of Pile
Scale :-1:60

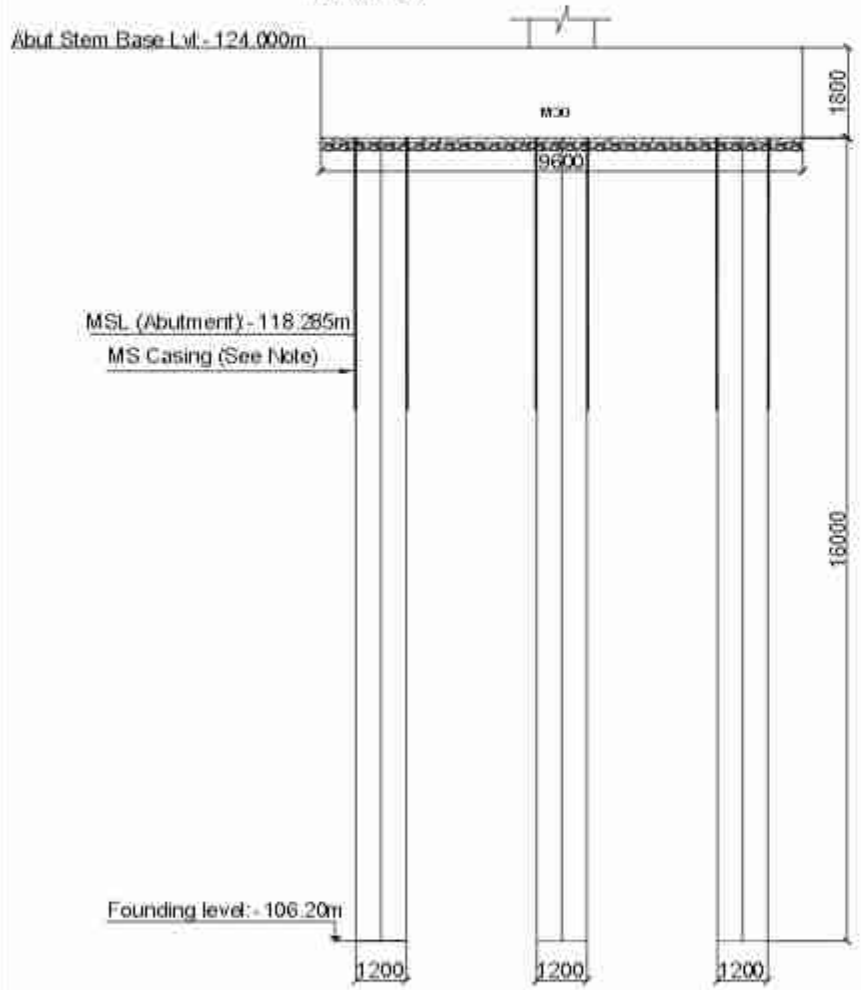

Piles Section at A-A
Scale :-1:150

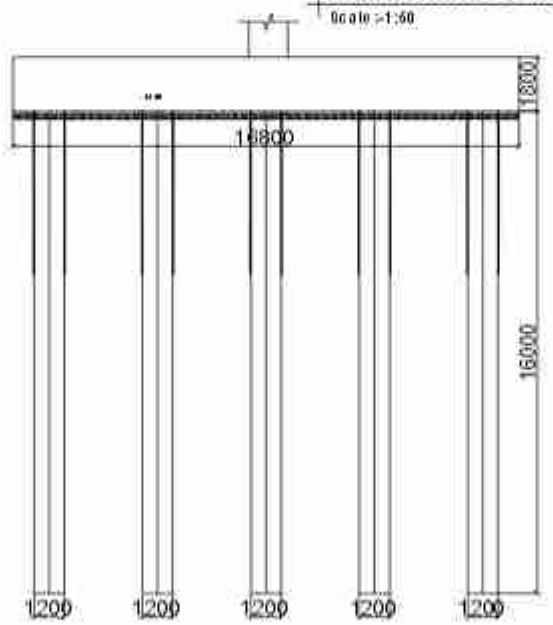

Piles Section at B-B
Scale :-1:250

Location	Design Pile Length m	Design Working load on pile (non - seismic case)kn	Allowable Bearing Capacity on pile (Scour case)kn	Allowable Bearing Capacity of the Pile (Non Scour case)kn
Abutment	16	2071	2367	2572
Pier	0	0	0	0

Note on MS permanent casing on piles: In case piling works are done without temporary casing, the piles shall be lined with 6mm thick MS steel permanent casing up to 1.5 m or 0.5m below MSL whichever is larger (Subject to instruction and approval by the Engineer).

For Construction Methology and Sequence Please See General Notes.

BAR BENDING SCHEDULE OF ABUTMENT PILECAP

BAR ID	SHAPE OF BAR IN mm (NOT TO SCALE)	SPACING (MM)	Ø OF BARS (mm)	NO. OF BARS	LENGTH (m)	WEIGHT/LENGTH (kG/m)	TOTAL WEIGHT (kG)
APC1	1080 9430		20	112	11.590	2.466	3201.268
APC2	1080 9430		20	112	11.590	2.466	3201.268
APC3	1080 16634		16	64	18.794	1.578	1898.452
APC4	1080 16634		16	64	18.794	1.578	1898.452
APC5	1570 Curve length 251 Curve radius 40 Hook length 80		16	473	2.232	1.578	1666.310
		Approx spacing: 400 C/C along axis 1000 C/C across axis					
APC6	16650 9450		16	5	52.200	1.578	411.947
TOTAL IN PILE CAP OF ONE ABUTMENT							12277.697
TOTAL WEIGHT IN METRIC TON							12.278

BAR BENDING SCHEDULE OF ABUTMENT PILE

BAR ID	SHAPE OF BAR IN mm (NOT TO SCALE)	SPACING (MM)	Ø OF BARS (mm)	NO. OF BARS	LENGTH (m)	WEIGHT/LENGTH (kG/m)	TOTAL WEIGHT (kG)
AP1a	200 Vertical bars provided in bundle of 2 bars 17605		25	40	17.810	3.853	2745.140
AP1b	0 0 No Curtailment		0	0	0.000	0.000	0.000
AP2	Dia-1034, Pitch-150,14m from bottom of pile cap		16	1	306.360	1.578	483.540
AP3	Dia-1034, Pitch-200,200 below critical zone		12	1	61.210	0.888	54.343
TOTAL IN ONE PILE							3283.023
TOTAL IN 15 PILES OF ONE ABUTMENT (IN METRIC TON)							49.245

Government of Nepal Ministry of Physical Infrastructure and Transport **Department of Roads** **Project Directorate Office (ADB)** **SASEC Highway Improvement Project-** **Project Preparatory Consultant (SHIP-PPC)** **ADB Loan No: 3722-NEP**	**CONSULTANT:** Soosung Engineering Co. Ltd, Korea in association with ERMC P (Ltd) and Tech Studio of Engineering Nepal	**IMPLEMENTING AGENCY:** **DOR, DCID** **ROAD NAME:** **East West Highway (H01)** **Butwal - Gorusinghe Section**	**SHEET TITLE:** Reinforcement Details of Abutment Piles of **Rajpur Bridge** (46/H001/295_A)	**SCALE:** As Shown		**NAME**	**SIGNATURE**	**REV NO.**	**DESCRIPTION**	**DATE:** November , 2022 **DWG.NO.:** 295_Rajpur **SHEET NO.:** 17/25
					Designed by:	Saroj Bhattarai				
					Checked by:	P. Upadhyaya				
					Approved by:	Dr. T.H.Choi				

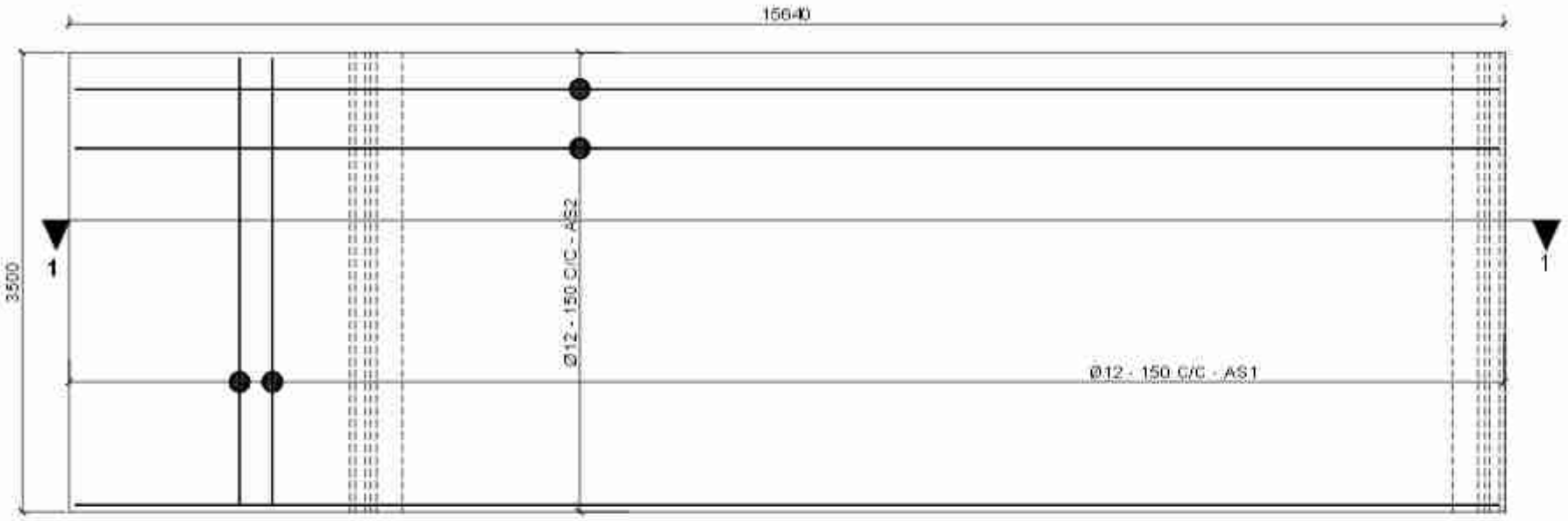

Plan of Reinforcement Details of Approach Slab
Scale:-1:50

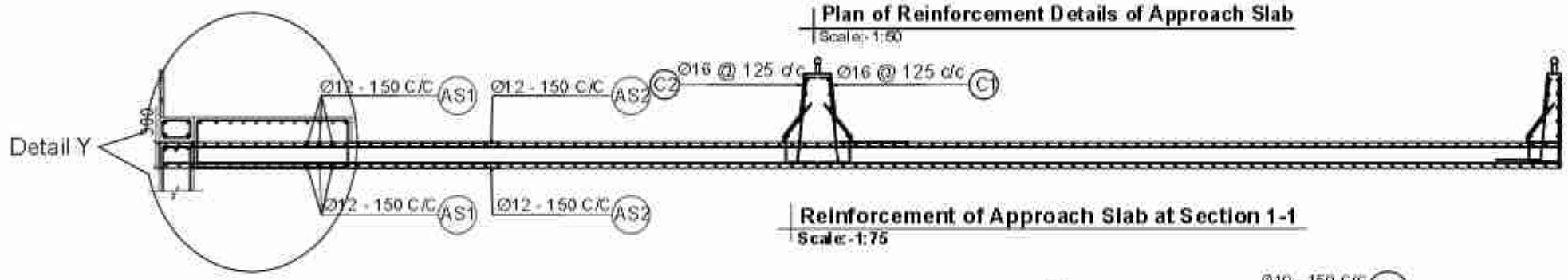

Reinforcement of Approach Slab at Section 1-1
Scale:-1:75

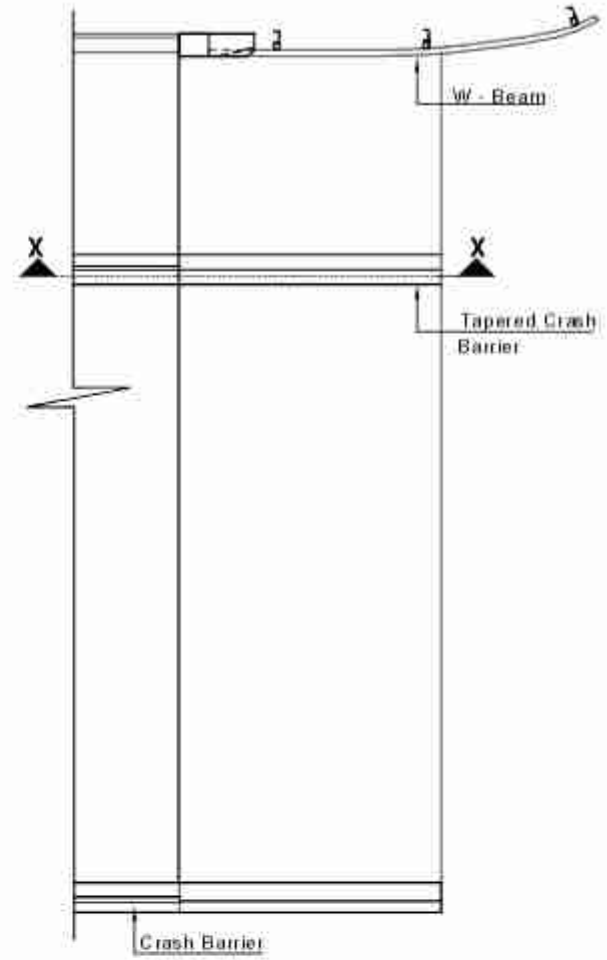

Plan of Approach Slab
Not to Scale

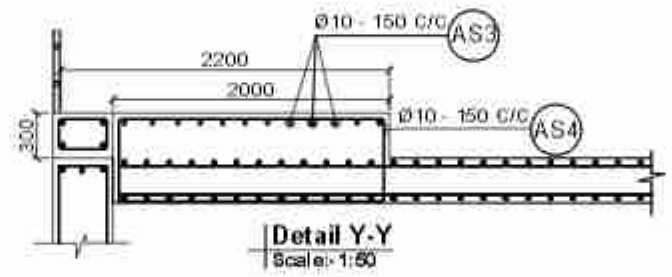

Detail Y-Y
Scale:-1:50

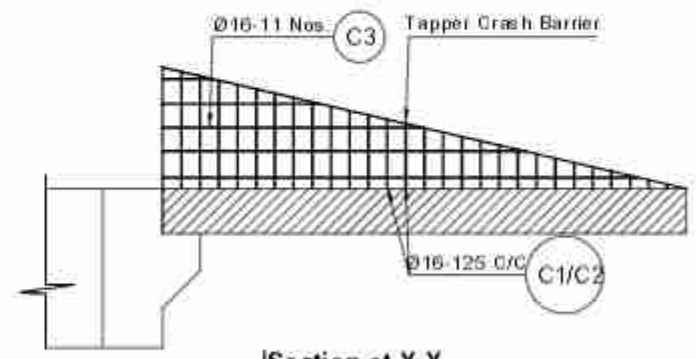

Section at X-X
Not to Scale

BAR BENDING SCHEDULE OF APPROACH SLAB							
BAR ID	SHAPE OF BAR IN mm (NOT TO SCALE)	SPACING (mm)	Ø OF BARS (mm)	NO. OF BARS	LENGTH (m)	WEIGHT/LENGTH (Kg/m)	TOTAL WEIGHT (Kg)
AS1	3400	150	12	148	3.400	0.888	446.749
AS2	10850	150	12	48	10.850	0.888	462.375
TOTAL IN ONE APPROACH SLAB							909.124
TOTAL WEIGHT IN METRIC TON							0.909

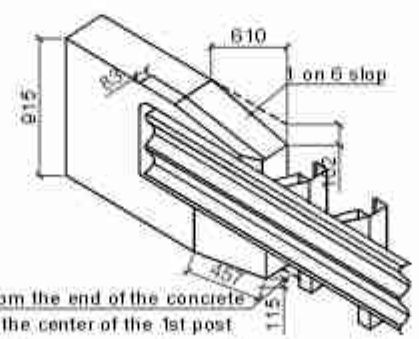

200 mm From the end of the concrete end wall to the center of the 1st post

Transition between concrete crash barrier and W-beam
Scale:-1:50

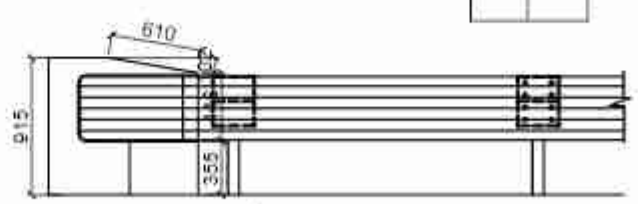

Eleavation
Scale:-1:50

Government of Nepal Ministry of Physical Infrastructure and Transport **Department of Roads** **Project Directorate Office (ADB)** **SASEC Highway Improvement Project-** Project Preparatory Consultant (SHIP-PPC) ADB Loan No: 3722-NEP	**CONSULTANT:** Soosung Engineering Co. Ltd, Korea in association with ERMC P (Ltd) and Tech Studio of Engineeering Nepal	**IMPLEMENTING AGENCY:** **DOR, DCID** **ROAD NAME:** **East West Highway (H01)** **Butwal - Gorusinghe Section**	**SHEET TITLE:** Reinforcement Details of Approach Slab of **Rajpur Bridge** (46/H001/295_A)	**SCALE:** As Shown		NAME	SIGNATURE	REV NO.	DESCRIPTION	DATE: November , 2022 DWG.NO.: 295_Rajpur SHEET NO.: 18/25
					Designed by:	Saroj Bhattarai				
					Checked by:	P. Upadhyaya				
					Approved by:	Dr. T.H.Choi				

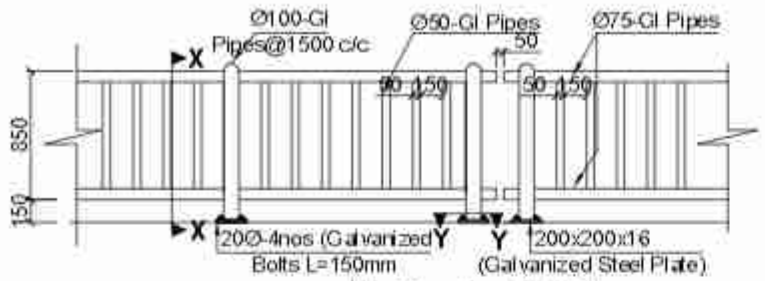

Railing Post Details
Scale:-1:50

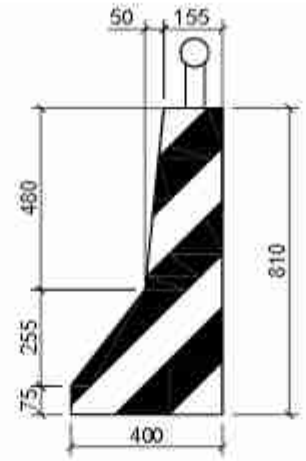

Painting Work on Crash Barrier
Scale:-1:20

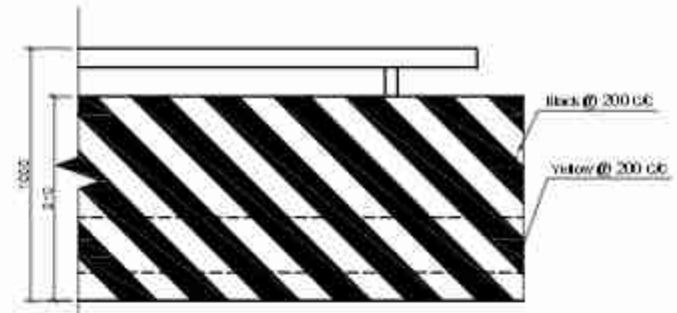

Painting Work on Crash Barrier on The Surface Facing Towards Carriageway
Scale:-1:20

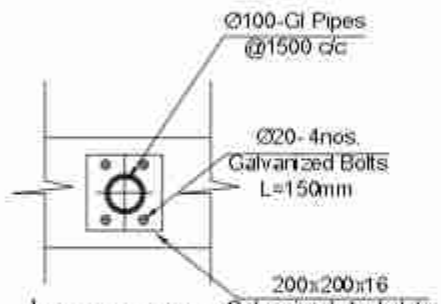

Section at Y-Y
Scale:-1:20

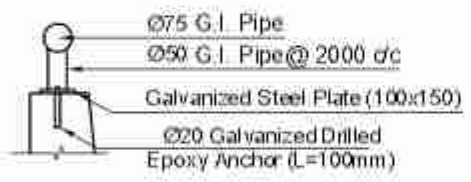

Details at- A-A
Scale:-1:20

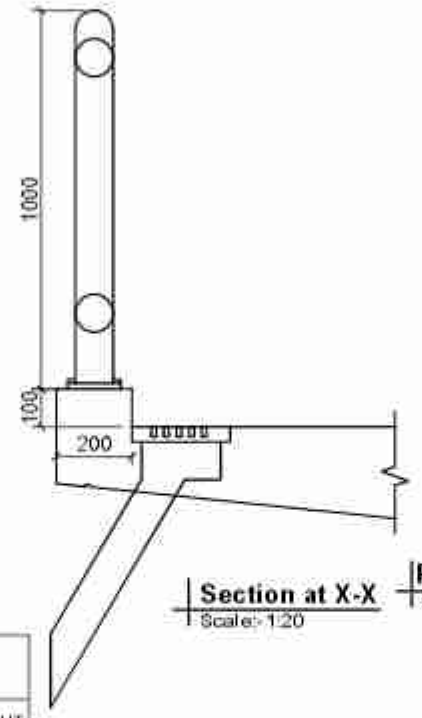

Section at X-X
Scale:-1:20

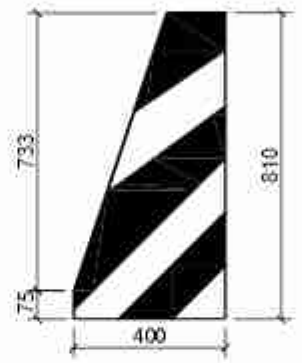

Painting Work on Tapper Crash Barrier
Scale:-1:20

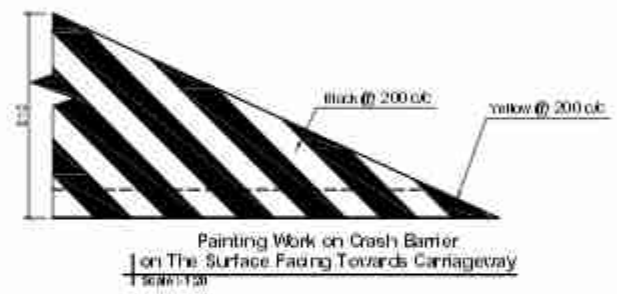

Painting Work on Crash Barrier on The Surface Facing Towards Carriageway
Scale:-1:20

BAR BENDING SCHEDULE OF CRASH BARRIER

BAR ID	SHAPE OF BAR IN mm (NOT TO SCALE)	SPACING (MM)	Ø OF BARS (mm)	NO. OF BARS	LENGTH (m)	WEIGHT/LENGTH (kG/m)	TOTAL WEIGHT (kG)
C1	575, 225, 305, 928	125	16	8	2.030	1.578	25.632
C2	915, 500	125	16	8	1.415	1.578	17.867
C3	960		16	11	0.960	1.578	16.667
TOTAL FOR 1M							60.166
TOTAL FOR 1.0M IN MT							0.006

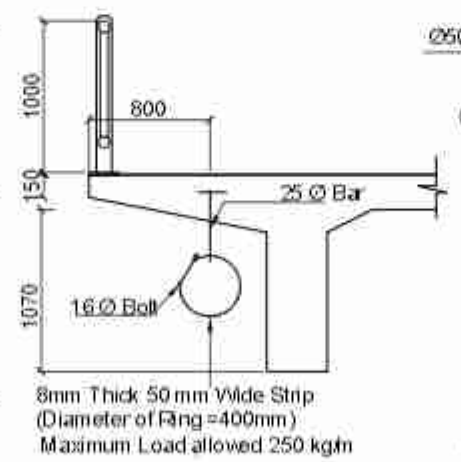

Utility hanger Detail
Scale:-1:50

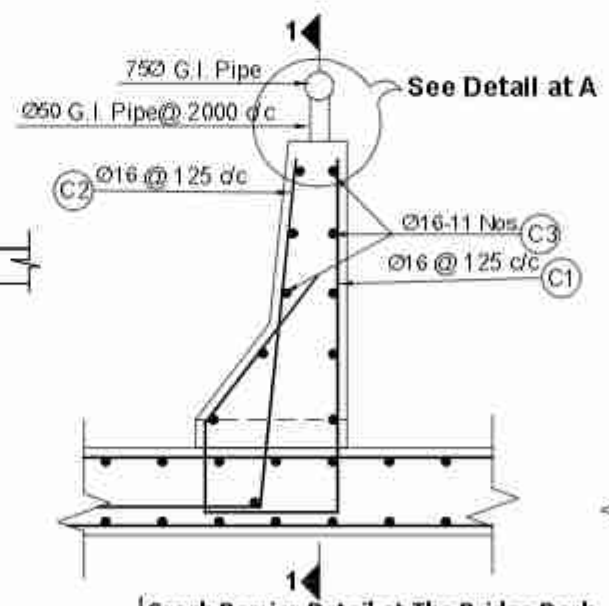

Crash Barrier Detail at The Bridge Deck
Scale:-1:20

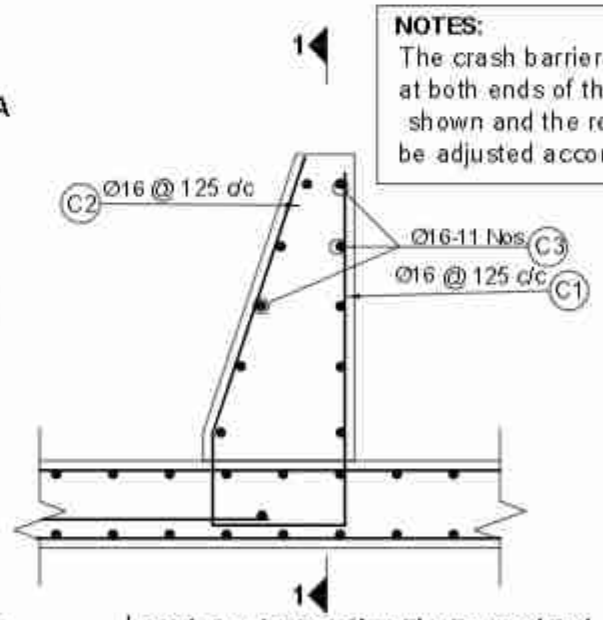

Crash Barrier Detail at The Tapered End
Scale:-1:20

NOTES:
The crash barrier shall be sloped at both ends of the bridge as shown and the reinforcement shall be adjusted according to the slope.

Government of Nepal Ministry of Physical Infrastructure and Transport **Department of Roads** **Project Directorate Office (ADB)** **SASEC Highway Improvement Project-** **Project Preparatory Consultant (SHIP-PPC)** **ADB Loan No: 3722-NEP**	**CONSULTANT:** Soosung Engineering Co. Ltd, Korea in association with ERMC P. (Ltd) and Tech Studio of Engineeering Nepal	**IMPLEMENTING AGENCY:** **DOR, DCID** **ROAD NAME:** **East West Highway (H01)** **Butwal - Gorusinghe Section**	**SHEET TITLE:** Miscellaneous Details - 1 of **Rajpur Bridge** (461-H001/295_A)	**SCALE:** As Shown		NAME	SIGNATURE	REV NO.	DESCRIPTION	DATE: November , 2022
					Designed by:	Saroj Bhattara				DWG.NO.: 295_Rajpur
					Checked by:	P. Upadhyaya				
					Approved by:	Dr. T.H.Choi				SHEET NO.: 19/25

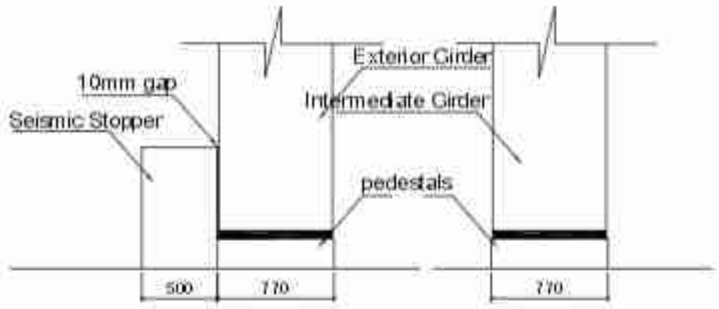

Abutment Cap With Stopper
Scale:-1:50

Note
On Pedestal Thickness The thickness of the pedestal can be suitably adjusted as per engineer's instruction to retain the height of the ballast wall

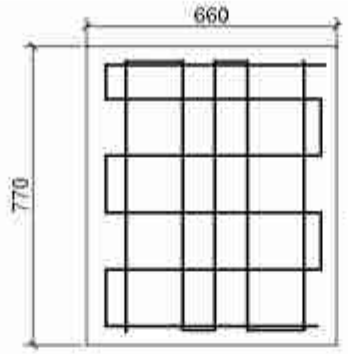

Pedestal Plan
Scale:-1:20

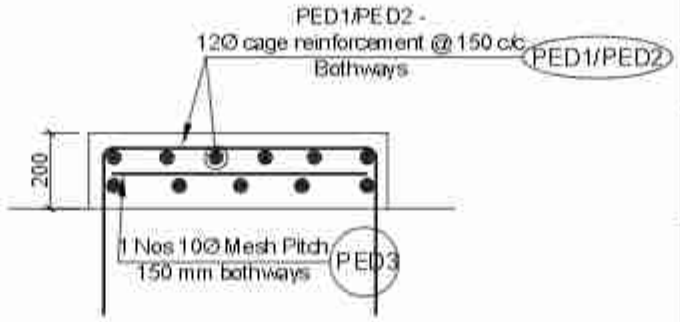

Pedestal Section
Scale:-1:20

Fixed Pot Bearing As Per IRC : 83 (Part - III) - 2018 Section 2.1.1

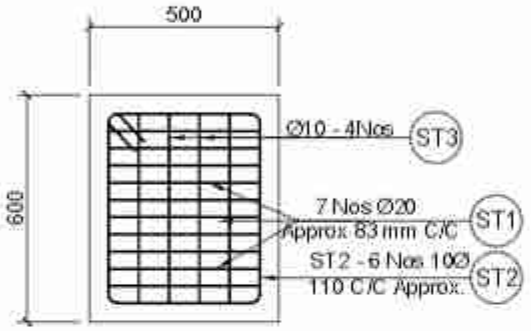

Stoppers Plan
Scale:-1:20

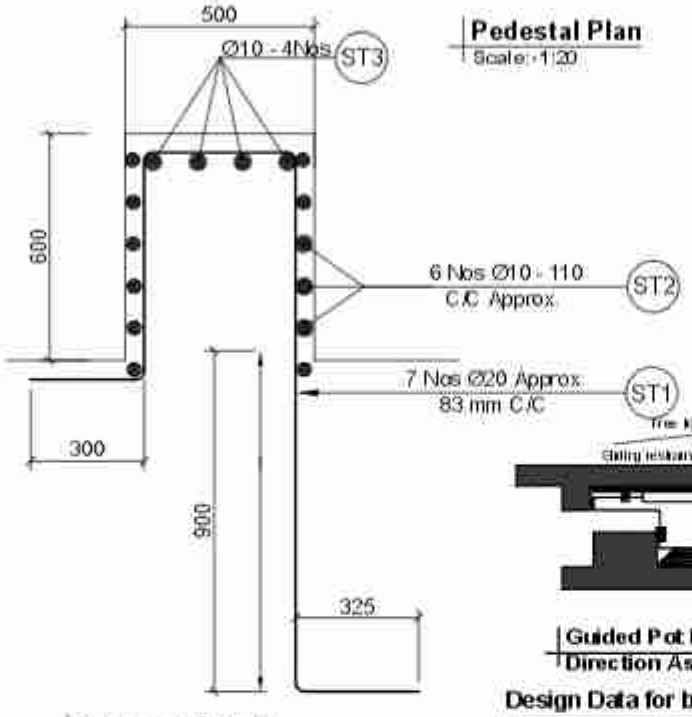

Stoppers Details
Scale:-1:20

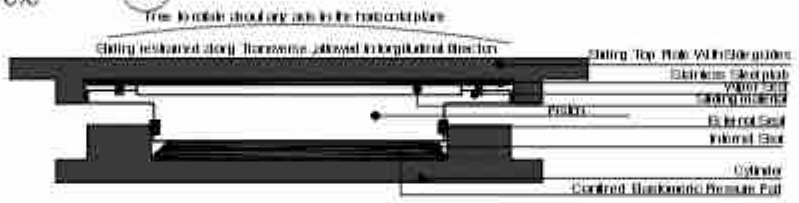

Guided Pot Bearing(For free Bearing) Movement Allowed in to longitudinal Direction As Per IRC : 83 (Part - III) - 2018 Section 2.1.3

Design Data for bearings (per bearing)

Load Condiadtion	Items		Load / Displacement/ Moment	
			POT Fixed Bearing	POT_PTFE Free Bearing
Under DL only	V, kN	No EQ	731	731
		EQ	826	826
	HL, kN	No EQ	38	38
		EQ	438	44
	HT, kN	No EQ	0	0
		EQ	197	197
	θ, rad	No EQ	0.0000	0.0000
		EQ	0.0000	0.0000
	Δ, mm		N/A	54
Under Maximum Live Load	V, kN	No EQ	1270	1270
		EQ	1441	1441
	HL, kN	No EQ	146	63
		EQ	597	72
	HT, kN	No EQ	0	0
		EQ	317	317
	θ, rad	No EQ	-0.0001	-0.0001
		EQ	-0.0001	-0.0001
	Δ, mm		N/A	54

The Contractor Shall Provide and Supply POT - PTFE Bearings According to Provided load and Deformation.

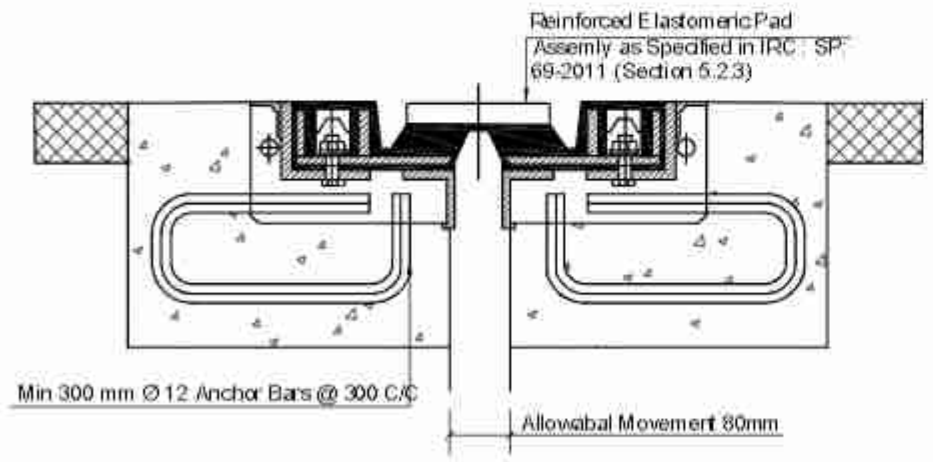

Reinforced Elastomeric Joint
Scale:-1:10

BAR BENDING SCHEDULE OF PEDESTAL

BAR ID	SHAPE OF BAR IN mm (NOT TO SCALE)	SPACING (MM)	Ø OF BARS (mm)	NO. OF BARS	LENGTH (m)	WEIGHT/LENGTH (kG/m)	TOTAL WEIGHT (kG)
PED1	690; 920; 200		16	5	2.930	1.578	23.123
PED2	560; 920; 200		16	6	2.800	1.578	26.516
PED3	674; 544; Pitch 150 bothway, 1 layer		16	1	7.460	1.578	11.822
TOTAL WEIGHT IN KG							61.461
TOTAL WEIGHT IN MT							0.061

BAR BENDING SCHEDULE OF STOPPER

BAR ID	SHAPE OF BAR IN mm (NOT TO SCALE)	SPACING (MM)	Ø OF BARS (mm)	NO. OF BARS	LENGTH (m)	WEIGHT/LENGTH (kG/m)	TOTAL WEIGHT (kG)
ST1	400; 600; 1500; 300; 300		20	7	3.100	2.466	53.516
ST2	420; 100; 500		10	6	2.040	0.617	7.546
ST3	500		10	4	0.500	0.617	1.233
TOTAL WEIGHT IN KG							62.295
TOTAL WEIGHT IN MT							0.062

Legends
EQ = Earthquake condition
V = Vertical load
HL = Horizontal force along the bridge axis
HT = Horizontal force transverse to bridge axis
θ = Rotation about transverse axis
Δ = Maximum longitudinal movement allowed

Notes:
Proposed Type of Bearing:- POT-PTFE bearings
1) The POT-Fixed bearings are fixed in position and free to rotate in all directions
2)The POT-PTFE Free bearings are free to rotate in all direction, Free to slide along the the bridge axis and Fixed in position in transverse direction
3) The coefficient of friction, μ for PTFE free bearings is taken as 0.05

Government of Nepal Ministry of Physical Infrastructure and Transport **Department of Roads** **Project Directorate Office (ADB)** **SASEC Highway Improvement Project-** **Project Preparatory Consultant (SHIP-PPC)** **ADB Loan No: 3722-NEP**	**CONSULTANT:** Soosung Engineering Co. Ltd, Korea in association with ERMC P (Ltd) and Tech Studio of Engineeering Nepal	**IMPLEMENTING AGENCY:** **DOR, DCID** **ROAD NAME:** **East West Highway (H01)** **Butwal - Gorusinghe Section**	**SHEET TITLE:** Miscellaneous Details - 2 of **Rajpur Bridge** (46/H001/295_A)	**SCALE:** As Shown		NAME	SIGNATURE	REV NO.	DESCRIPTION	DATE: November , 2022 DWG.NO.: 295_Rajpur SHEET NO.: 20/25
					Designed by:	Saroj Bhattarai				
					Checked by:	P. Upadhyaya				
					Approved by:	Dr. T.H.Choi				

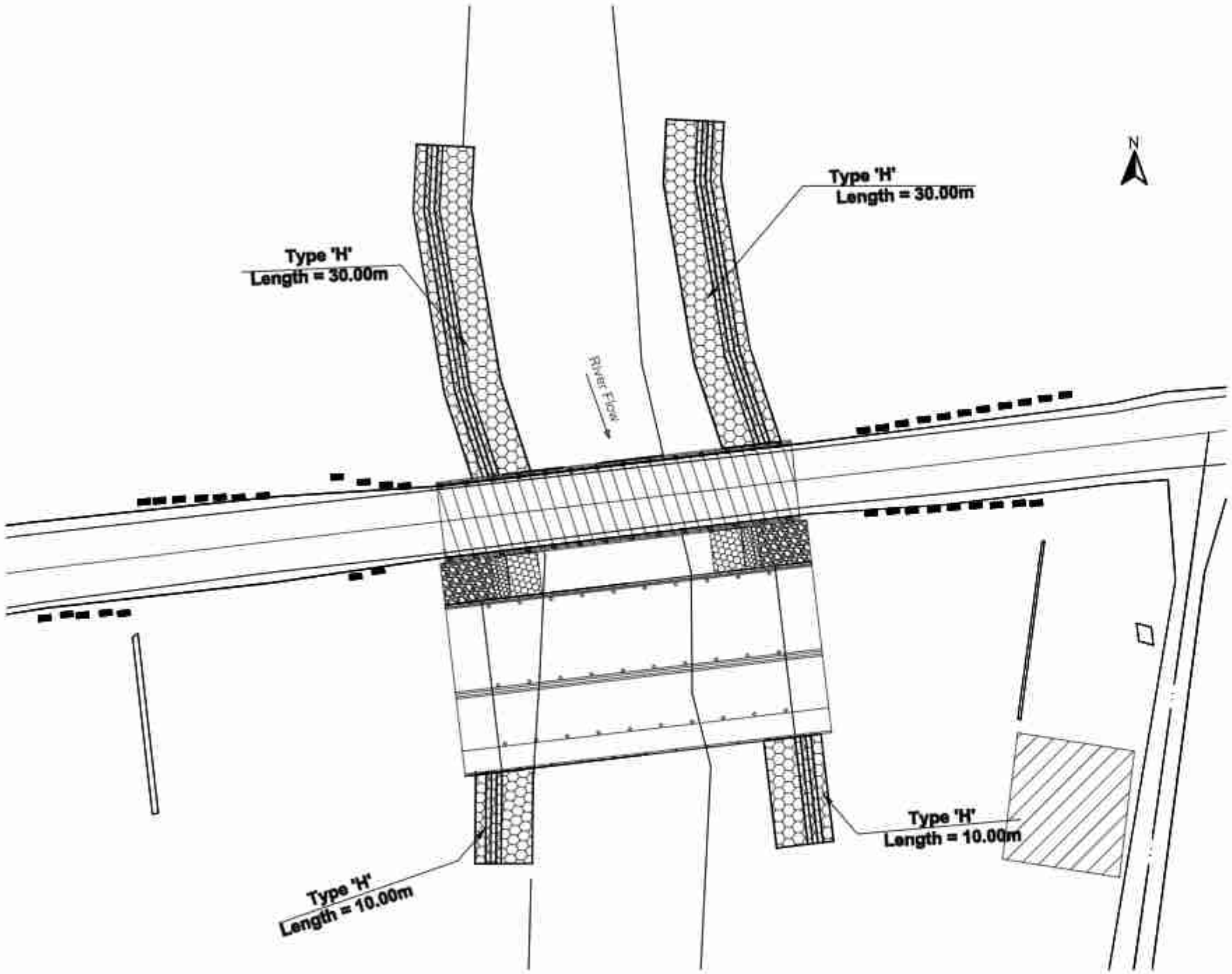

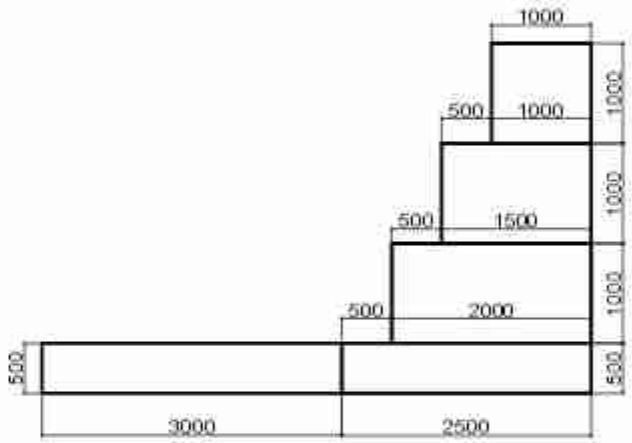

"H" Type River Training Structure
Scale:- 1:75

Government of Nepal Ministry of Physical Infrastructure and Transport **Department of Roads** **Project Directorate Office (ADB)** **SASEC Highway Improvement Project-** Project Preparatory Consultant (SHIP-PPC) ADB Loan No : 3722-NEP	**CONSULTANT:** Soosung Engineering Co. Ltd, Korea in association with ERMC P (Ltd) and -Tech Studio of Engineeering Nepal	**IMPLEMENTING AGENCY:** **DOR, DCID** **ROAD NAME:** **East\West Highway (H01)** **Butwal - Gorusinghe Section**	**SHEET TITLE:** River Training Work of **Rajpur Bridge** (46/H001/295_A)	**SCALE:** As Shown		NAME	SIGNATURE	REV NO.	DESCRIPTION	DATE: November , 2022
					Designed by:	Saroj Bhattarai				DWG.NO.: 295_Rajpur
					Checked by:	P. Upadhyaya				
					Approved by:	Dr. T.H.Choi				SHEET NO.: 21/25

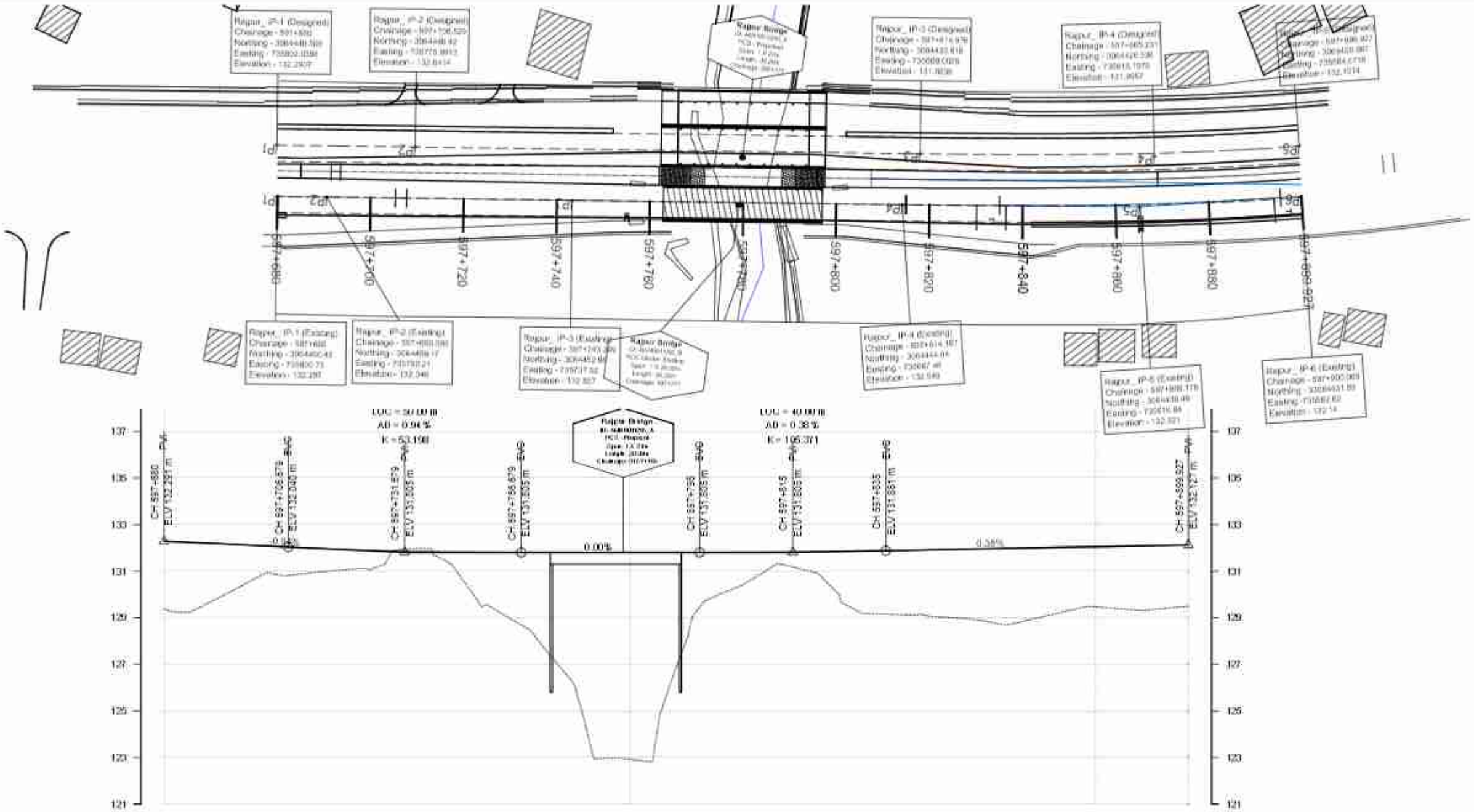

DESIGN LEVEL(m)	132.291	132.197	132.103	132.010	131.931	131.872	131.831	131.809	131.805	131.805	131.805	131.805	131.805	131.816	131.835	131.863	131.900	131.938	131.978	132.014	132.052	132.090
EXISTING LEVEL(m)	129.278	129.682	130.738	130.897	131.079	131.905	131.485	129.475	128.114	124.783	122.923	126.877	130.057	131.114	130.936	129.187	129.125	128.995	128.707	129.110	129.467	129.311
HORIZONTAL ALIGNMENT RIGHT / LEFT	IP-1 R=0.00		IP-2 R=1494.50												IP-3 R=40.00				IP-4 R=800.00			IP-5 R=0.00
SUPER ELEVATION	597+680															597+830.147	597+836.447				597+894.014	597+899.927
CHAINAGE(Km)	597+680	597+690	597+700	597+710	597+720	597+730	597+740	597+750	597+760	597+770	597+780	597+790	597+800	597+810	597+820	597+830	597+840	597+850	597+860	597+870	597+880	597+890

NC T 2 T

Government of Nepal
Ministry of Physical Infrastructure and Transport
Department of Roads
Project Directorate Office (ADB)
SASEC Highway Improvement Project-
Project Preparatory Consultant (SHIP-PPC)
ADB Loan No: 3722-NEP

CONSULTANT:
Soosung Engineering Co. Ltd, Korea in association with
ERMC P (Ltd), Nepal
and
TSE-Tech Studio of Engineeering

IMPLEMENTING AGENCY:
DOR, DCID

ROAD NAME:
East West Highway (H01)
Butwal - Gorusinghe Section

SHEET TITLE:
Plan & Profile of Rajpur Bridge
597+680-597+899.927

SCALE:
0 2 4 6m Vertical Scale
0 10 20 30m Horizontal Scale

	NAME	SIGNATURE	REV NO.	DESCRIPTION
DESIGNED BY:	Saroj Bhattarai			
CHECKED BY:	P. Upadhyaya			
APPROVED BY:	Dr. T.H.Choi			

DATE: November , 2022
DWG.NO.: 295_Rajpur
SHEET NO.: 22/25

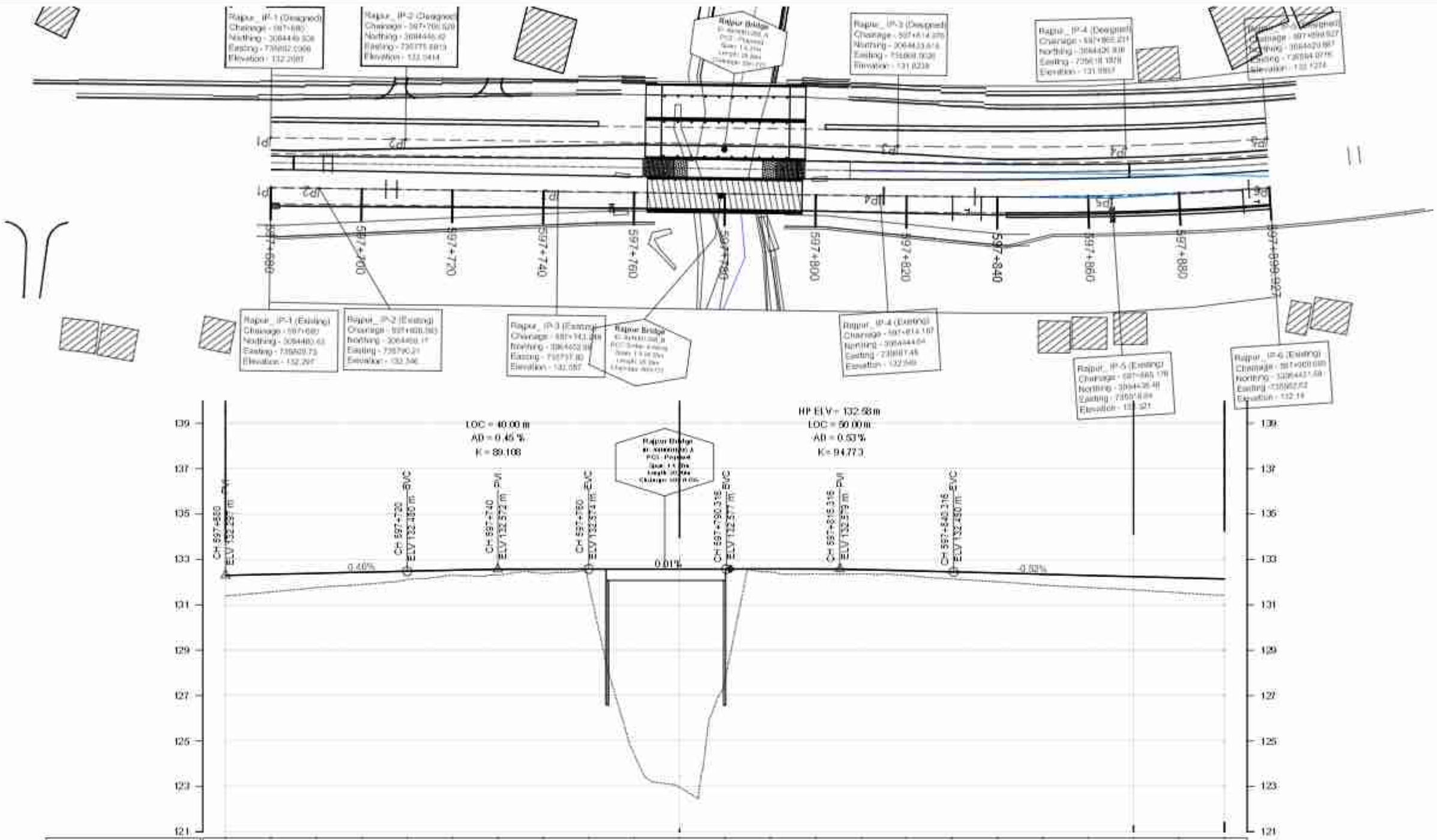

DESIGN LEVEL(m)	132.297	132.343	132.389	132.435	132.480	132.521	132.550	132.567	132.574	132.575	132.576	132.577	132.573	132.555	132.533	132.497	132.451	132.399	132.348	132.296	132.244	132.192	132.140
EXISTING LEVEL(m)	131.384	131.568	131.756	131.894	132.113	132.301	132.314	132.383	131.901	124.414	122.954	127.766	132.454	132.368	132.360	132.294	132.143	132.015	131.866	131.765	131.655	131.532	131.415
HORIZONTAL ALIGNMENT RIGHT	IP-1 R=0.00	IP-2 R=1500.00																					
HORIZONTAL ALIGNMENT LEFT							IP-3 R=1500.00							IP-4 R=1500.00					IP-5 R=800.00				
SUPER ELEVATION	597+590								NC							597+836.419	597+839.169		4.7777777777778			597+891.88	597+899.927
CHAINAGE(Km)	597+680	597+690	597+700	597+710	597+720	597+730	597+740	597+750	597+760	597+770	597+780	597+790	597+800	597+810	597+820	597+830	597+840	597+850	597+860	597+870	597+880	597+890	597+900

Government of Nepal
Ministry of Physical Infrastructure and Transport
Department of Roads
Project Directorate Office (ADB)
SASEC Highway Improvement Project-
Project Preparatory Consultant (SHIP-PPC)
ADB Loan No: 3722-NEP

CONSULTANT:
Soosung Engineering Co. Ltd, Korea in association with
ERMC P (Ltd), Nepal
and
TSE-Tech Studio of Engineeering

IMPLEMENTING AGENCY:
DOR, DCID

ROAD NAME:
East West Highway (H01)
Butwal - Gorusinghe Section

SHEET TITLE:
Plan & Profile of Rajpur Bridge
597+680 - 597+900

SCALE:
0 2 4 6m Vertical Scale
0 10 20 30m Horizontal Scale

	NAME	SIGNATURE	REV NO.	DESCRIPTION
DESIGNED BY:	Saroj Bhattarai			
CHECKED BY:	P. Upadhyaya			
APPROVED BY:	Dr. T.H.Choi			

DATE: November , 2022
DWG.NO.: 295_Rajpur
SHEET NO.: 23/25

Ch:597+650
GL:130.443
DL:132.024

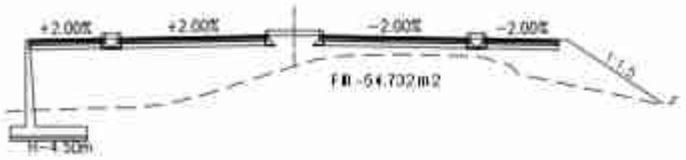

Ch:597+660
GL:130.645
DL:132.124

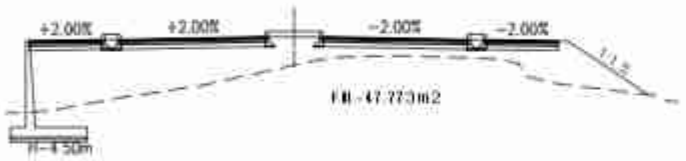

Ch:597+670
GL:130.975
DL:132.213

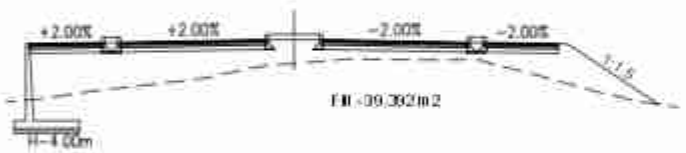

Ch:597+680
GL:131.049
DL:132.293
GL: 129.378
DL: 132.291
GL: 131.384
DL: 132.297

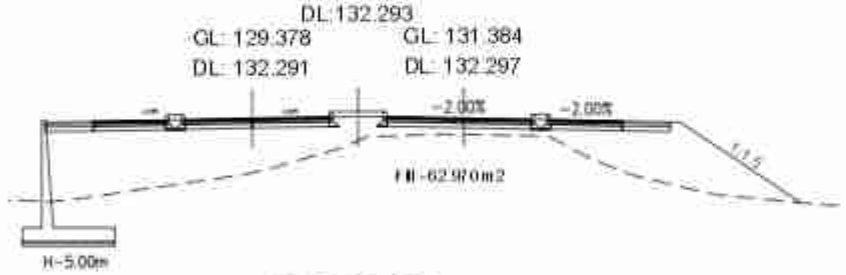

Ch:597+690
GL:130.951
DL:132.362
GL: 129.682
DL: 132.197
GL: 131.568
DL: 132.343

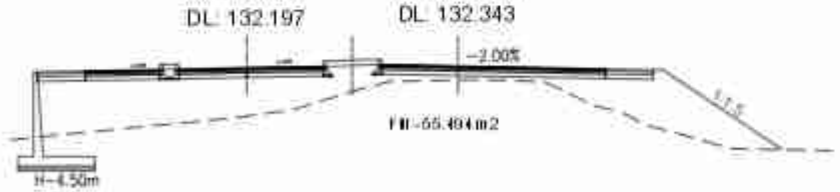

Ch:597+700
GL:131.462
DL:132.422
GL: 130.739
DL: 132.103
GL: 131.756
DL: 132.389

Ch:597+710
GL:131.603
DL:132.471
GL: 130.897
DL: 132.010
GL: 131.894
DL: 132.435

Ch:597+720
GL:131.771
DL:132.511
GL: 131.079
DL: 131.931
GL: 132.113
DL: 132.480

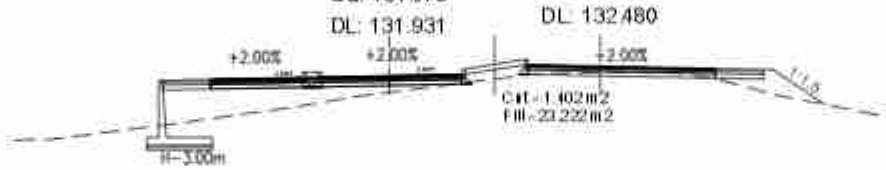

Ch:597+730
GL:132.046
DL:132.541
GL: 131.905
DL: 131.872
GL: 132.301
DL: 132.521

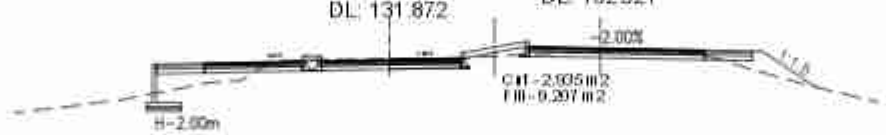

Ch:597+740
GL:131.972
DL:132.561
GL: 131.488
DL: 131.831
GL: 132.314
DL: 132.550

Ch:597+750
GL:131.630
DL:132.571
GL: 129.474
DL: 131.809
GL: 132.383
DL: 132.567

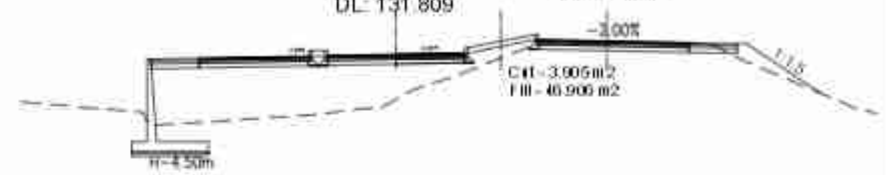

Ch:597+760
GL:130.710
DL:132.572
GL: 128.112
DL: 131.805
GL: 131.908
DL: 132.574

Ch:597+770
GL:124.238
DL:132.572
GL: 124.777
DL: 131.805
Bridge Th: 0.5 m
GL: 124.417
DL: 132.572

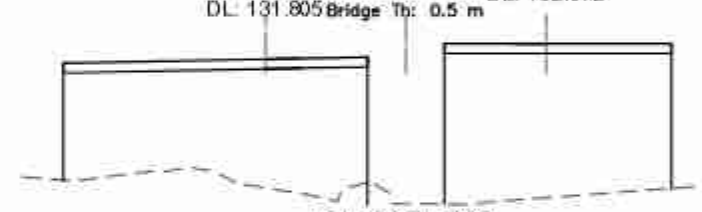

Ch:597+780
GL:122.608
DL:132.572
GL: 122.923
DL: 131.805
Bridge Th: 0.5 m
GL: 122.965
DL: 132.572

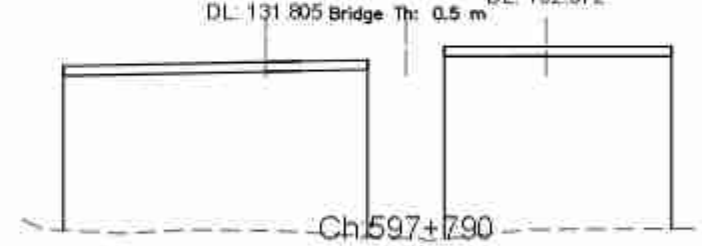

Ch:597+790
GL:127.584
DL:132.572
GL: 126.882
DL: 131.805
Bridge Th: 0.5 m
GL: 127.761
DL: 132.572

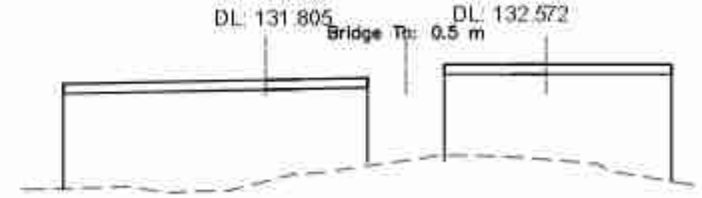

Government of Nepal Ministry of Physical Infrastructure and Transport **Department of Roads** **Project Directorate Office (ADB)** **SASEC Highway Improvement Project-** **Project Preparatory Consultant (SHIP-PPC)** **ADB Loan No: 3722-NEP**	**CONSULTANT:** Soosung Engineering Co. Ltd, Korea in association with ERMC P (Ltd), Nepal and TSE-Tech Studio of Engineeering	**IMPLEMENTING AGENCY:** **DOR, DCID** **ROAD NAME:** **East West Highway (H01)** **Butwal - Gorusinghe Section**	**SHEET TITLE:** Cross Section of Ch:597+650 - 597+790	**SCALE:** Vertical Scale Horizontal Scale		**NAME**	**SIGNATURE**	**REV NO.**	**DESCRIPTION**	**DATE:** November , 2022 **DWG.NO.:** 295_Rajpur **SHEET NO.:** 23.1.05
					DESIGNED BY:	Saroj Bhattarai				
					CHECKED BY:	P. Upadhyaya				
					APPROVED BY:	Dr. T.H.Choi				

Ch:597+800
GL:131.491
DL:132.570
GL: 130.068
DL: 131.806
GL: 132.454
DL: 132.573
-0.65%
Cut - 37.31 m2
Fill - 59.360 m2
1:1.5
H=5.50m

Ch:597+810
GL:132.155
DL:132.561
GL: 131.115
DL: 131.816
GL: 132.368
DL: 132.558
+0.52%
Cut - 2.650 m2
Fill - 25.247 m2
1:1.5
H=5.50m

Ch:597+820
GL:131.675
DL:132.545
GL: 130.937
DL: 131.835
GL: 132.360
DL: 132.533
+1.69%
Cut - 2.343 m2
Fill - 30.880 m2
1:1.5
H=3.50m

Ch:597+830
GL:131.606
DL:132.521
GL: 129.187
DL: 131.863
GL: 132.294
DL: 132.497
+2.35%
Cut - 1.756 m2
Fill - 53.952 m2
1:1.5
H=4.50m

Ch:597+840
GL:131.168
DL:132.490
GL: 129.125
DL: 131.900
GL: 132.142
DL: 132.451
+2.83%
+2.83%
Cut - 0.206 m2
Fill - 50.027 m2
1:1.5
H=4.50m

Ch:597+850
GL:131.116
DL:132.451
GL: 128.996
DL: 131.938
GL: 132.013
DL: 132.399
+3.31%
+3.31%
Fill - 42.461 m2
1:1.5
H=4.50m

Ch:597+860
GL:130.804
DL:132.405
GL: 128.712
DL: 131.976
GL: 131.864
DL: 132.348
+3.79%
+3.79%
Fill - 49.197 m2
1:1.5
H=4.50m

Ch:597+870
GL:130.927
DL:132.351
GL: 129.099
DL: 132.014
GL: 131.762
DL: 132.296
+4.27%
+4.27%
Fill - 47.023 m2
1:1.5
H=4.50m

Ch:597+880
GL:130.879
DL:132.290
GL: 129.472
DL: 132.052
GL: 131.652
DL: 132.244
+4.74%
+4.74%
Fill - 42.701 m2
1:1.5
H=4.50m

Ch:597+890
GL:131.068
DL:132.221
GL: 129.317
DL: 132.090
GL: 131.527
DL: 132.192
+5.22%
+5.22%
+5.22%
+5.22%
Fill - 39.563 m2
1:1.5
H=4.50m

Ch:597+900
GL:131.063
DL:132.147
GL: 129.489
DL: 132.127
+5.70%
+5.70%
Fill - 37.155 m2
H=4.50m

Ch:597+910
GL:131.010
DL:132.073
+6.18%
+6.18%
+6.18%
+6.18%
1:1.5
Fill - 37.164 m2

Ch:597+920
GL:130.911
DL:131.998
+6.28%
+6.28%
+6.28%
+6.28%
1:1.5
Fill - 32.678 m2

Ch:597+930
GL:130.891
DL:131.923
+5.56%
+5.56%
+5.56%
+5.56%
1:1.5
Fill - 29.665 m2

Ch:597+940
GL:130.833
DL:131.849
+4.84%
+4.84%
+4.84%
+4.84%
1:1.5
Fill - 23.507 m2

Government of Nepal Ministry of Physical Infrastructure and Transport **Department of Roads** **Project Directorate Office (ADB)** **SASEC Highway Improvement Project-** **Project Preparatory Consultant (SHIP-PPC)** **ADB Loan No: 3722-NEP**	**CONSULTANT:** Soosung Engineering Co. Ltd, Korea in association with ERMC P (Ltd), Nepal and TSE-Tech Studio of Engineeering	**IMPLEMENTING AGENCY:** **DOR, DCID** **ROAD NAME:** **East West Highway (H01)** **Butwal - Gorusinghe Section**	**SHEET TITLE:** Cross Section of Ch:597+800 - 597+940	**SCALE:** 0 2 4 6m vertical scale 0 10 20 30m horizontal scale		NAME	SIGNATURE	REV NO.	DESCRIPTION	DATE: November , 2022
					DESIGNED BY:	Saroj Bhattarai				DWG.NO.: 295_Rajpur
					CHECKED BY:	P. Upadhyaya				
					APPROVED BY:	Dr. T.H.Choi				SHEET NO. 23/25

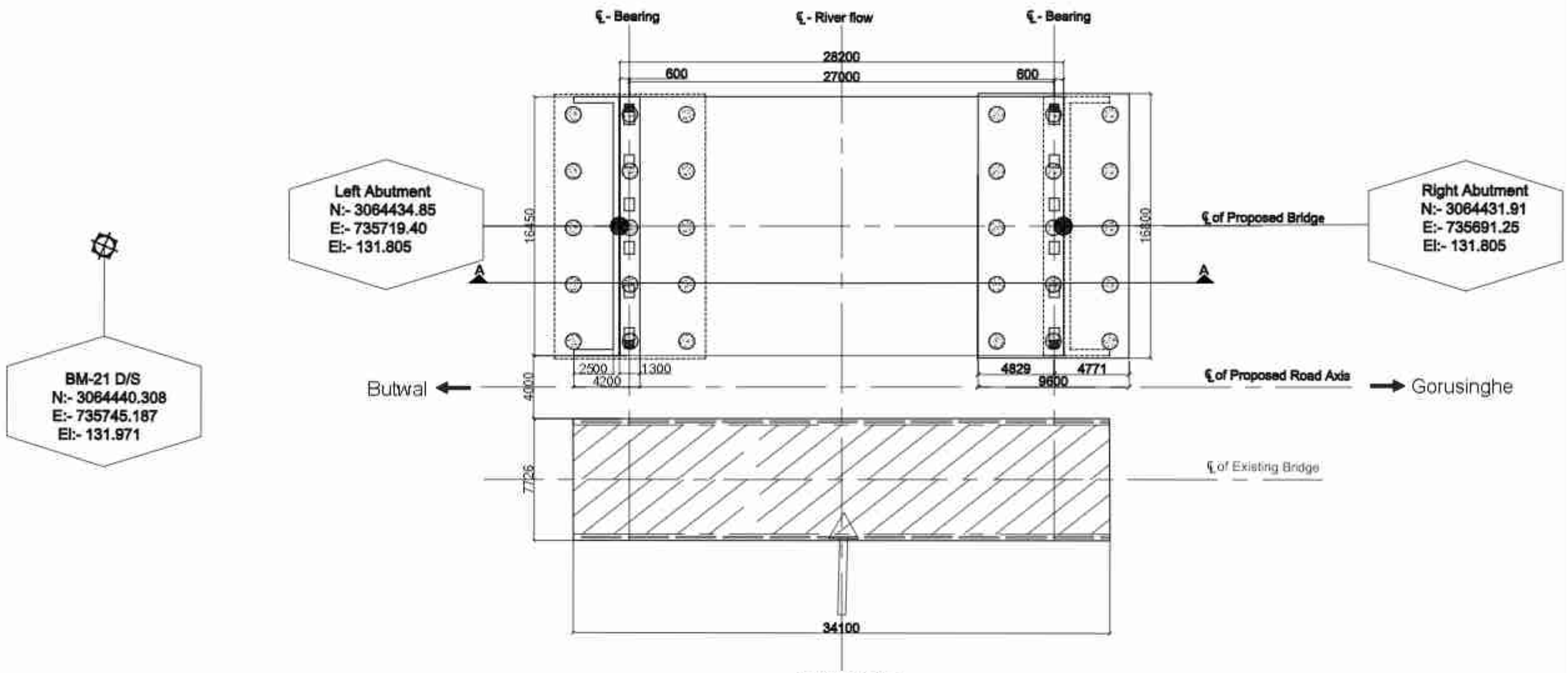

Layout Plan
Scale:-1:300

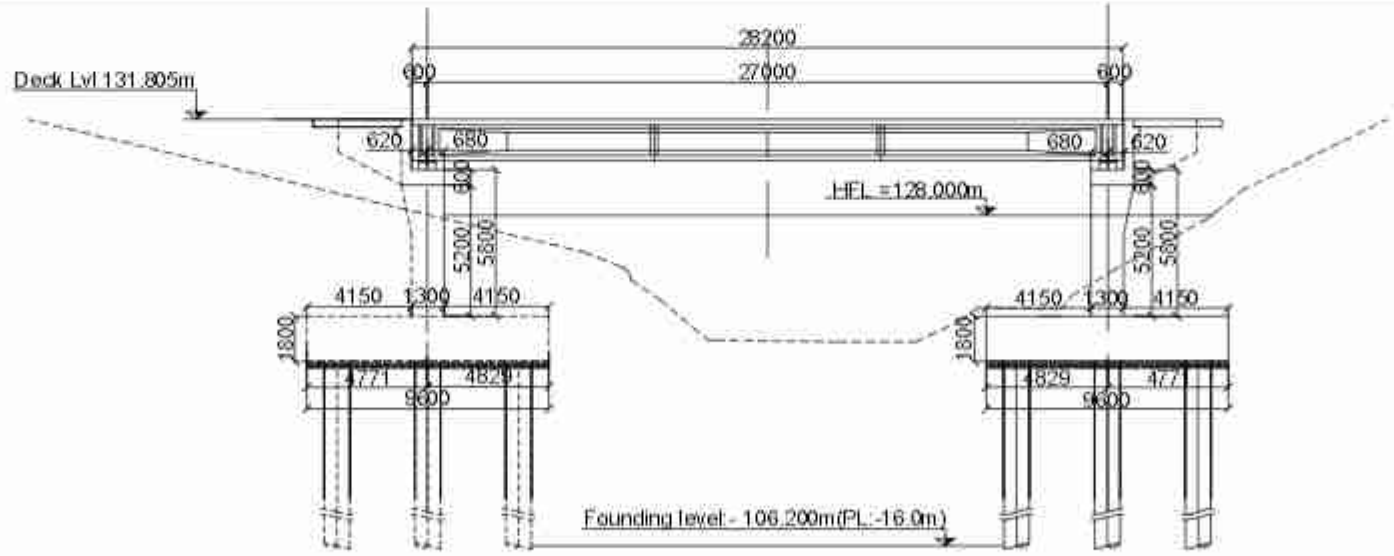

Section at A-A
Scale : 1:300

Government of Nepal Ministry of Physical Infrastructure and Transport **Department of Roads** **Project Directorate Office (ADB)** **SASEC Highway Improvement Project-** **Project Preparatory Consultant (SHIP-PPC)** **ADB Loan No: 3722-NEP**	**CONSULTANT:** Soosung Engineering Co. Ltd, Korea in association with ERMC P (Ltd) and Tech Studio of Engineeering Nepal	**IMPLEMENTING AGENCY:** **DOR, DCID** **ROAD NAME:** **East West Highway (H01)** **Butwal - Gorusinghe Section**	**SHEET TITLE:** Layout Plan of **Rajpur Bridge** (46/-1001/295_A)	**SCALE:** As Shown		**NAME**	**SIGNATURE**	**REV NO.**	**DESCRIPTION**	**DATE:** November , 2022 **DWG.NO.:** 295_Rajpur **SHEET NO.:** 24/25
					Designed by:	Saroj Bhattarai				
					Checked by:	P. Upadhyaya				
					Approved by:	Dr. T.H.Choi				

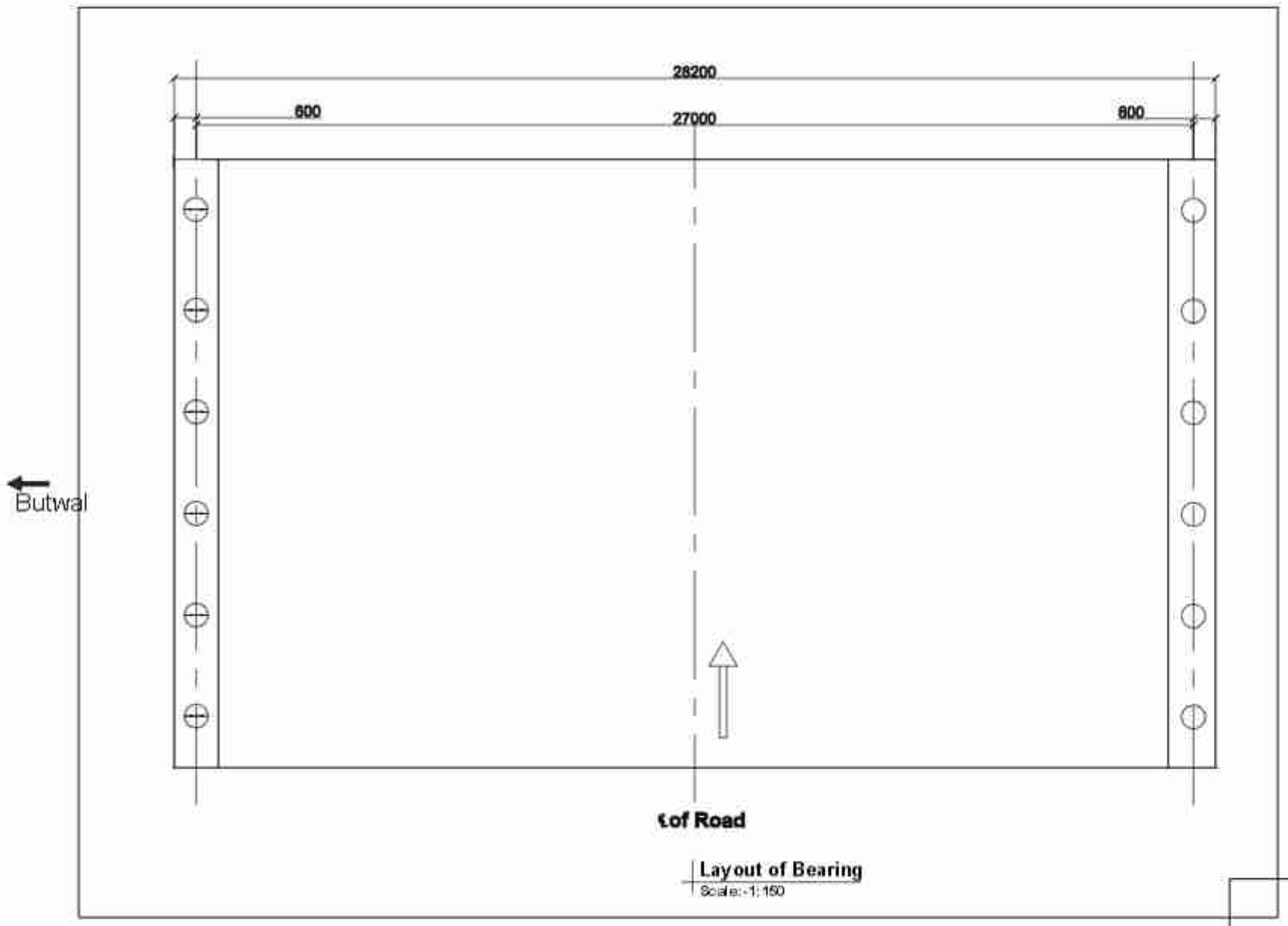

N

Legend

Elastomeric bearing.
Partial movement allowed in longitudinal direction.
Restrained to transverse movement.Free to rotate in any direction.

Fixed Pot-bearing.
Restrainde to lateral movement,Free to rotate in aney direction.

Free Pot-bearing.
Partial movement allowed in longitudinal direction.
Restrained to transverse movement.Free to rotate in any direction.

Government of Nepal Ministry of Physical Infrastructure and Transport **Department of Roads** **Project Directorate Office (ADB)** **SASEC Highway Improvement Project-** **Project Preparatory Consultant (SHIP-PPC)** **ADB Loan No: 3722-NEP**	**CONSULTANT:** Soosung Engineering Co. Ltd, Korea in association with ERMC P (Ltd) and Tech Studio of Engineeering Nepal	**IMPLEMENTING AGENCY:** **DOR, DCID** **ROAD NAME:** **East West Highway (H01)** **Butwal - Gorusinghe Section**	**SHEET TITLE:** Layout Plan of **Rajpur Bridge** (461-H001/295_A)	**SCALE:** As Shown		NAME	SIGNATURE	REV NO.	DESCRIPTION	DATE: November , 2022
					Designed by:	Saroj Bhattarai				DWG.NO.: 295_Rajpur
					Checked by:	P. Upadhyaya				
					Approved by:	Dr. T.H.Choi				SHEET NO.: 25/25

Government of Nepal

Ministry of Physical Infrastructure and Transport

Department of Roads

Project Directorate (ADB)

Implementing Agency : DOR, DCID

Project Preparatory Consultants

Under

SASEC Highway Improvement Project (SHIP-PPC)

(ADB Loan No: 3722 Nep)

Contract No. SHIP/PPC/2020/02

Bamaha Bridge(46-H001-296_A)

St. Ch : 598+234.90 ~ End Ch : 598.269.10

Detailed Drawing

Butwal - Gorusinghe Sector

November,2022

CONTENTS

S.No.	DESCRIPTION	DWG. NO	NO. OF SHEETS
1.	General Notes.	1 - 2	2
2.	Topographic Map.	2.1	1
3.	General Arrangement.	3-4	2
4.	Bore Logs.	5	1
5.	Detail of Superstructure.	6	1
6.	Reinforcement Details of Slab.	7	1
7.	Prestressing Details of Main Girder .	8	1
8.	Anchorage Details.	9	1
9.	Reinforcement Details of Girder.	10	1
10.	Bar Bending Schedule of Slab & Main Girder.	11	1
11.	Reinforcement Details of Intermediate Cross Girder.	12	1
13.	Reinforcement Details of Cross Girder.	13	1
14.	Abutment Details.	14	1
15.	Reinforcement Details of Abutment.	15	1
16.	BBS & Reinforcement Details.	16	1
17.	Reinforcement Details of Abutment Pile.	17	1
16.	Reinforcement Detail of Approach Slab.	18	1
18.	Miscellaneous Detail.	19-20	2
19.	River Training Work.	21	1
20.	Plan & Profile.	22-23	2
21.	Cross Section.	23.1-23.2	2
22.	Layout Plan.	24-25	2

GENERAL NOTES

General

- Metric system of measurement is used in all drawings. Elevation and Stations are shown in Meter and all other dimensions are in Millimeters, except indicated otherwise.
- In case of contradictions, specific notes on respective sheet shall supersede the General Notes
- No dimensions shall be scaled from the drawings. Only written dimensions shall be followed. Any doubtful matter in the drawings shall be brought to the attention of the engineer-in-charge for any corrections before the execution of the works.

Design Notes

The design codes followed:
For RCC and PSC concrete - IRC:112-2020
For loads and stresses - IRC:6-2017
For substructure and foundations - IRC:78-2014
For seismic design - IRC:SP:114-2018. Seismic zone V. Importance factor 1.2

Design live loads:

For urban area bridges
Case 1 - 3 lanes of class A + pedestrians; 1 lane of class A + 1 lane of class 70R + pedestrians
Case 2 - 4 lanes or class A; 2 lanes of class A + 1 lane of class 70R. No pedestrians
For non-urban area bridges
Case 1 - 2 lanes of class A + pedestrians; 1 lane of class 70R + pedestrians
Case 2 - 3 lanes of class A; 1 lane of class A + 1 lane of class 70R. No pedestrians.

Notes on Concrete

In General the grade of concrete to be used shall be as follows:
(**unless otherwise specified in the respective drawing sheets**)

For superstructure deck slab, wearing course, crash barriers:	M30
For raised footpaths:	M25
For main girders and cross girders of superstructure with PSC girders:	M45
For main girders and cross girders of superstructure with RCC girders:	M30
For substructure: Abutment stem, ballast wall, stoppers, bearing pedestals, pier cap, pier stem and pile caps:	M30
For bored and cast in situ piles:	M35
For leveling course:	M15

The maximum size of aggregate shall be as per IRC:112-2020, clause 18.4.4.2

Admixture to the concrete

To improve workability and/or increase initial setting time of concrete and cement grout, admixture conforming to IS:9103 and ASTM C-494, (Type F - High Range Water Reducing admixture) can be added in appropriate dosage, subject to their satisfactory proven use.

Clear Cover to reinforcement (unless otherwise specified in the respective drawing sheets)

Reinforcement bars of all components of the superstructure:	40mm
Prestressing ducts or strands in superstructure:	75mm
All components of abutment, pier, pile caps and piles (except stoppers and bearing pedestals):	75mm
Bearing pedestals and Stoppers:	50mm

Cover shall be ensured with the use of properly sized cement concrete blocks which can be secured to the re-bars or other devices approved by the engineer-in-charge. Use of loose stones or wooden pieces is not permitted.

Notes on Reinforcement

- All reinforcing steel bars shall be High Strength Deformed bars with grade Fe500 conforming to IS:1786
- Laps and Splices shall conform to IRC:112-2020, Clause 15.2.5. Use of mechanical coupler is permitted upon approval by the engineer.

Notes on Prestressing

- Prestressing strands shall be Class-2, uncoated 7 ply, low relaxation type with ultimate tensile stress 1862 N/mm², conforming to IS:14268.
- The diameter of strands, their number in a tendon and the total jacking force to be applied is specified in the respective drawing sheet. All the initial and long term losses are already incorporated in design.
- Corrugated HDPE Sheathing ducts shall be used with the minimum internal diameter not less than three times the cross sectional area of the tendon. The wall thickness and other properties of the sheathing shall be as per IRC:112-2020, clause 13.4.3
- The specified profile and the alignment of the ducts shall be strictly maintained by properly securing the ducts to the re-bars. If required, pieces of re-bars can be added or the re-bars slightly repositioned or bent to maintain the profile and alignment, with approval of the engineer-in-charge.
- The jacking equipment shall be fitted with appropriate force measuring device and shall be regularly checked and calibrated as prescribed by the manufacturer.
- Jacking shall be done from both ends simultaneously and gradually, recording the elongation both sides. The expected final elongation mentioned in the respective drawings sheet is based on modulus of elasticity of the strands (Es) equal to 1.95x10^5 MPa. If the Es of supplied strands is different then the elongation values shall be recalculated by multiplying the Design values of elongation by the ratio of Design Es / Actual Es.
- In case the total elongation is not achieved at the prescribed jacking force, the jacking operation can be continued until the force reaches the maximum allowable value. If the required elongation is achieved at jacking force lower than the prescribed value, the jacking operation shall continue until the prescribed force is reached, provided the Sum of the additional elongations thus achieved is not more than 5% of the sum of the prescribed elongations.
- In adverse condition to any of the cases above, the jacking operation shall be stopped, the tendons removed and this matter reported to the engineer-in-charge for further instruction. The jacking force should NEVER exceed the Maximum allowable value.

Grouting

- The tendons which satisfy the above conditions shall be grouted properly, ensuring the duct is free of any foreign material and there is no leak or damage around the joints between the anchors and the ducts. Grouting can be normally done immediately after successful completion of tensioning operations and shall not be delayed by more than 5 days of tensioning of the cables.
- The grout shall be prepared with Ordinary Portland cement with suitable expansive admixture approved by the engineer. Admixture containing chloride and nitrate are not permitted. The water/cement ratio shall not be more than 0.48. Retempering of the grout shall not be permitted. The grout shall be mixed with mechanical mixers and shall be continuously kept agitated until pumped in.

Stages and sequence of Prestressing

- The Precast composite girders shall be prestressed in two stages. The specified number of the tendons shall be tensioned in the prescribed sequence shown in the respective drawing sheet.
- The remaining tendons shall be tensioned after specified days after casting of the deck slab, in the sequence shown in the respective drawing sheet.
- The prestressing of the precast girder shall be started only after confirming that the cube specimen has achieved 100% of the prescribed compressive strength. No early prestressing allowed.

Construction methodology and sequence for Precast Prestressed Composite superstructure

- The main girders are be precast near the bridge site at suitable location (approach road or dry river bed, if available) on well prepared casting yard. The choice of location also depends upon the equipment available for lifting or launching the girders. After completion of the prestressing works the girders are either lifted by suitable cranes or pushed/launched with the help of rails and jacks or launching girders and placed carefully over the already completed substructure. Care shall be taken that all the preparatory works for the bearings are done properly before the launching/placing of the girders.
- Lifting shall be done only by the hooks provided at both ends. In case of jacking the jacking points shall be only just under the location of the hooks. No support, lifting or jacking is allowed at any other section of the girder
- After placing all the main girders and finishing the works on the bearings, the formwork for deck slab and cross girders are prepared. All the formwork for deck slab and cross girders shall be supported by the main girders. The main girders shall remain un-propped during casting of the deck slab. Similarly there shall be no false-work or props from the ground or part of substructure during casting of the deck slab.
- The Contractor shall ensure stability of the girders during all stages of construction.
- Dimensional tolerances for the precast girders shall be as per IRC:SP:71-2018, Clause 4.10. If not prescribed otherwise, transportation and handling operation shall follow the guidelines in Clause 4.9 of the same documents.
- The prescribed time-line for construction of the superstructure is as follows

Prestressing of Precast Girder only (Stage 1)	After 28 days of casting or confirming 100% compressive strength of concrete
Lifting/Launching of the Girder	Within 14 days of first stage prestressing
Casting of the Deck Slab	Within 14 days of placing of girder over substructure
Prestressing of Girder (Stage 2)	After 14 days of casting of deck slab
Casting of Footpath, Crash Barrier, Wearing Course etc	Preferably within 7 days but not later than 14 days of Second stage prestressing

Deviation from the above time-line is subject to approval by the engineer. No other vehicle except the concreting apparatus are allowed on the deck until the deck slab has attained its full specified strength.

Construction methodology for Cast-in-situ RCC superstructure

- Construction of Monolithic cast in situ RCC superstructure shall follow the standard practices. The falsework for the girders and deck slab are supported on the ground and removed after specified time period.

Notes on Bearings

- The contractor shall supply, provide and install the bearings designed according to the loadings and other relevant information provided in the drawings or BOQ.
- The dimension and number of layers of the Elastomeric bearings shown in the drawings are tentative. The bearings shall be designed, fabricated, tested and installed as per IRC:83 - 2018, Part-2 for elastomeric bearing and Part-3 for Pot-PTFE bearings, as the case applies.

Notes on Foundation and Substructure

- Standard Specifications and Special provisions to the Standard Specifications (if any) and specific notes on the drawings shall be followed for the construction of the abutments, piers and foundations.
- Backfill behind the abutment shall be places only after the concrete has achieved full 28 days strength. Heavy compaction equipment weighing more than 10 Ton shall not be used within 2.0 meters from the back of the abutment until all the works on superstructure is completed.
- The graded backfill behind the abutment shall be at a slope not steeper than 62 degrees, starting from the back of the footing. The back fill material dry density shall be within 1900 to 2200 kN/m³ and moisture content between 9 to 15%
- In case of new bridge adjacent to the existing bridge, care shall be taken not to render any damage to the elements of the existing bridge. Particular attention shall be paid to the foundation of the existing bridge. The contractor shall ensure that excavation for the foundation of the new bridge does not cause instability or settlement of the foundation of the existing bridge.
- If the existing bridge has a shallow foundation, the contractor shall protect the existing foundation by sheet piling or any other suitable means to the satisfaction of the engineer, before excavating for the foundation of the new bridge.

General Note: (For all Pile Foundation)

- Drilling/Boring works for pile is allowed only with rotary or oscillator type drilling equipment.No percussion method is allowed .Stability of borehole shall be ensured by the use of temporary casing.Use of other methods of borehole stability is subject to approval by the engineer, but in such case use of water/air/chemical jetting for boring process shall not be allowed.
- In case of drilling/boring without temporary casing,the contractor should ensure the stability and uniformity of the borehole before lowering the reinforcement cage and during concreting.
- Boring/Drilling of the piles is preferred in a staggered pattern.Boring/Drilling for any pile shall not commence before 24 hours of completion of concreting of any pile within a radius of 6 meters from its center.
- In case of drilling/boring without temporary casing , the pile shall be lined with 6mm thick permanent casing from the bottom of the pile cap down to 0.5 m below the maximum scour depth or 1.5 m whichever is larger.

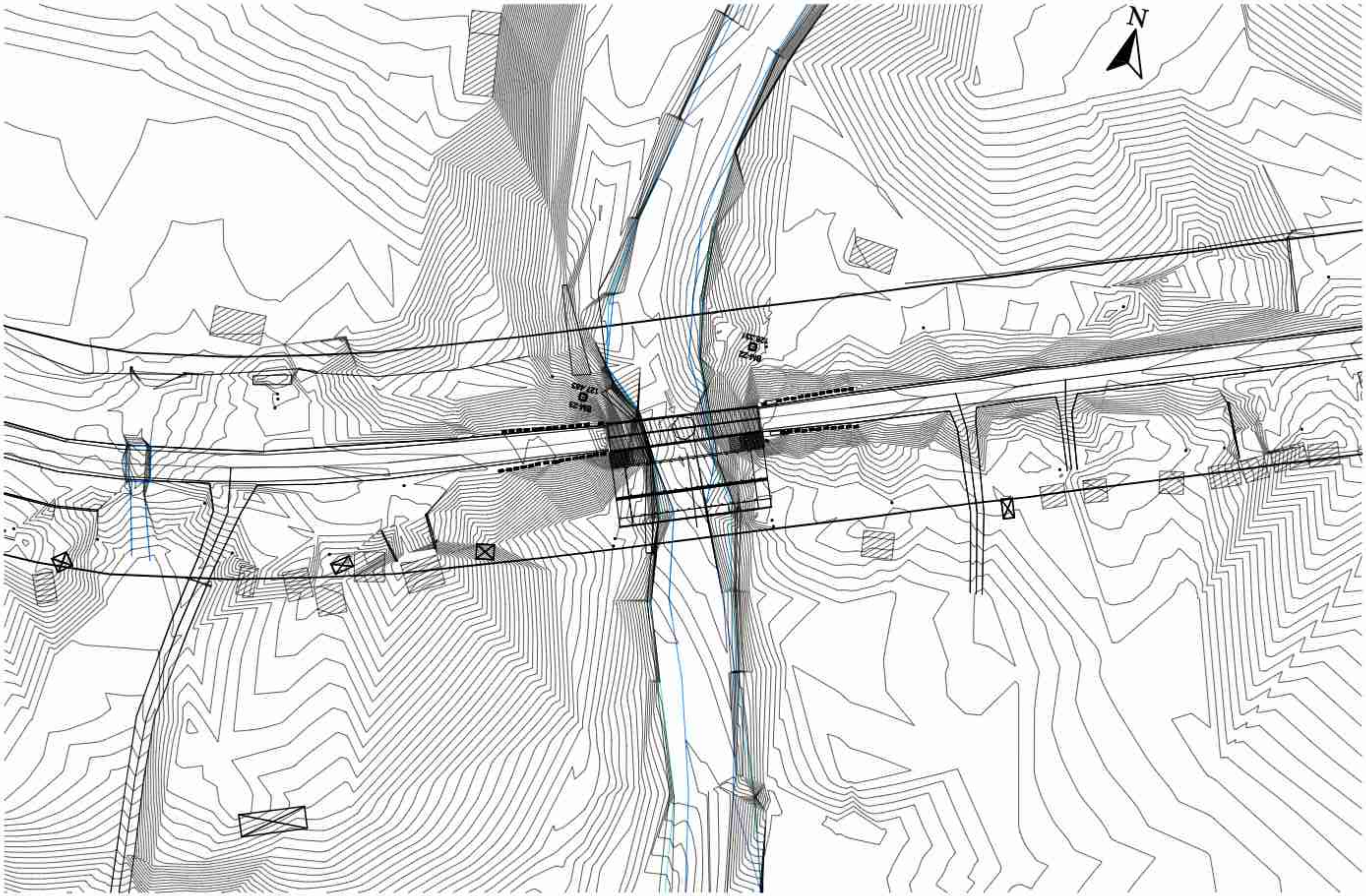

Government of Nepal Ministry of Physical Infrastructure and Transport **Department of Roads** **Project Directorate Office (ADB)** **SASEC Highway Improvement Project-** **Project Preparatory Consultant (SHIP-PPC)** **ADB Loan No: 3722-NEP**	**CONSULTANT:** Soosung Engineering Co. Ltd, Korea in association with ERMC P (Ltd) and Tech Studio of Engineeering Nepal	**IMPLEMENTING AGENCY:** **DOR, DCID**	**SHEET TITLE:**	**SCALE:**		**NAME**	**SIGNATURE**	**REV NO.**	**DESCRIPTION**	**DATE:**
		ROAD NAME:	Topographic Map of **Bamaha Bridge** (46/H001/296_A)	1:1	Designed by:	Saroj Bhattarai				November , 2022
		East/West Highway (H01)			Checked by:	P. Upadhyaya				**DWG.NO.:** 296_Bamaha
		Butwal - Gorusinghe Section			Approved by:	Dr. T.H.Choi				**SHEET NO.:** 2.1/25

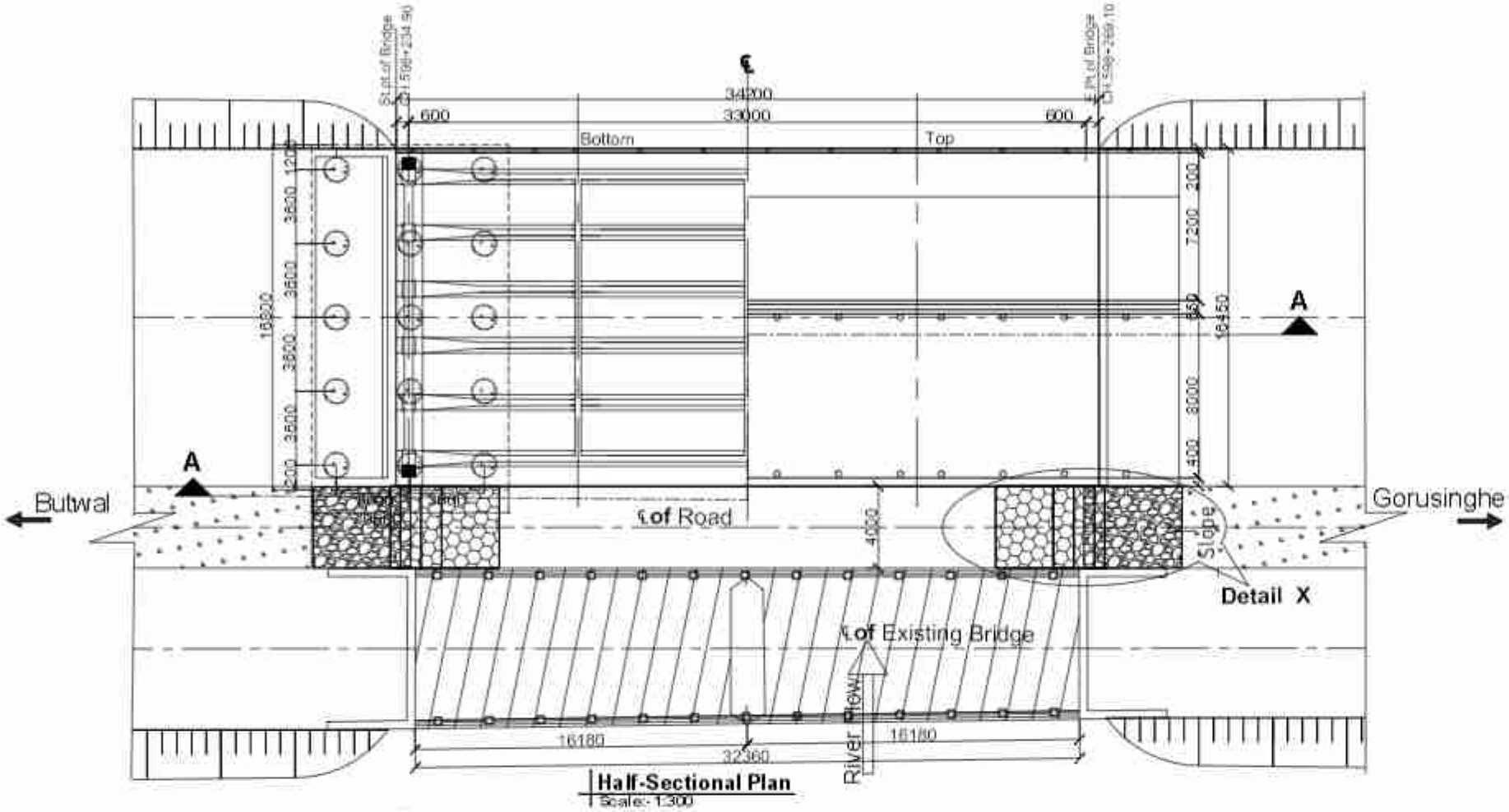

Half-Sectional Plan
Scale:- 1:300

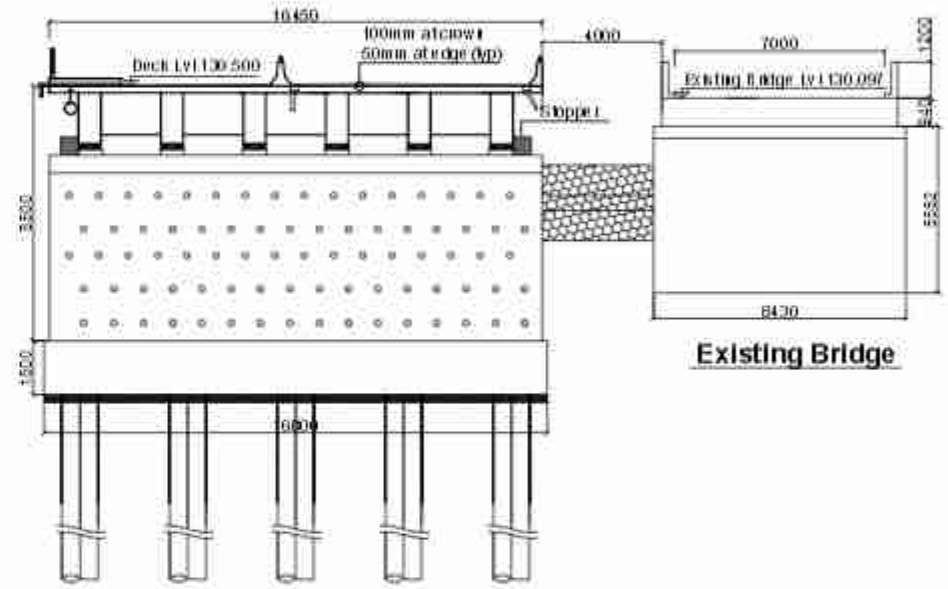

Existing Bridge

Elevation of Abutment
Scale:-1:200

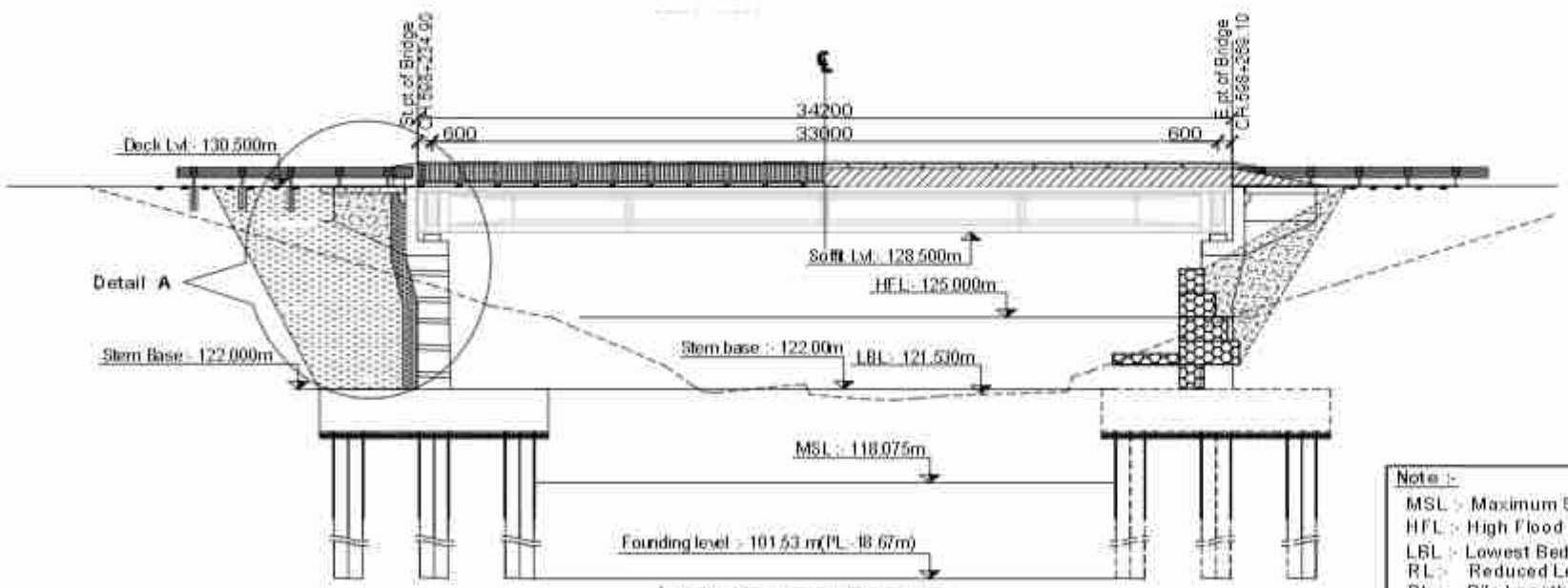

Half-Sectional Elevation
Scale:-1:300

Note :-
MSL :- Maximum Scour Level
HFL :- High Flood Level
LBL :- Lowest Bed Level
RL :- Reduced Level
PL :- Pile Length

	Name(NEC Number)	Signature
P. Engineer	P. Upadhyaya (Civil A 675)	
Structure Engineer	K.P.Wagle(Civil A 127) / P.Shrestha(Civil A 676) / S.Bhattarai (Civil A 904)	
Hydrologist	Dr. P.C. Jha(Civil A 166) / S. Adhikari (Civil A 408)	
Geotechnical Engineer	A. Adhikari(ka 199) / Dr. V. R. S. Shahi	

Government of Nepal Ministry of Physical Infrastructure and Transport **Department of Roads** **Project Directorate Office (ADB)** **SASEC Highway Improvement Project-** Project Preparatory Consultant (SHIP-PPC) ADB Loan No: 3722-NEP	**CONSULTANT:** Soosung Engineering Co. Ltd, Korea in association with ERMC P (Ltd) and Tech Studio of Engineeering Nepal	**IMPLEMENTING AGENCY:** **DOR, DCID** **ROAD NAME:** **East West Highway (H01)** **Butwal - Gorusinghe Section**	**SHEET TITLE:** General Arrangement of **Bamaha Bridge** (46/H001/296 A)	**SCALE:** As Shown		**NAME**	**SIGNATURE**	**REV NO.**	**DESCRIPTION**	**DATE:** November , 2022
					Designed by:	Saroj Bhattarai				DWG.NO.: 296_Bamaha
					Checked by:	P. Upadhyaya				
					Approved by:	Dr. T.H.Choi				SHEET NO.: 03/25

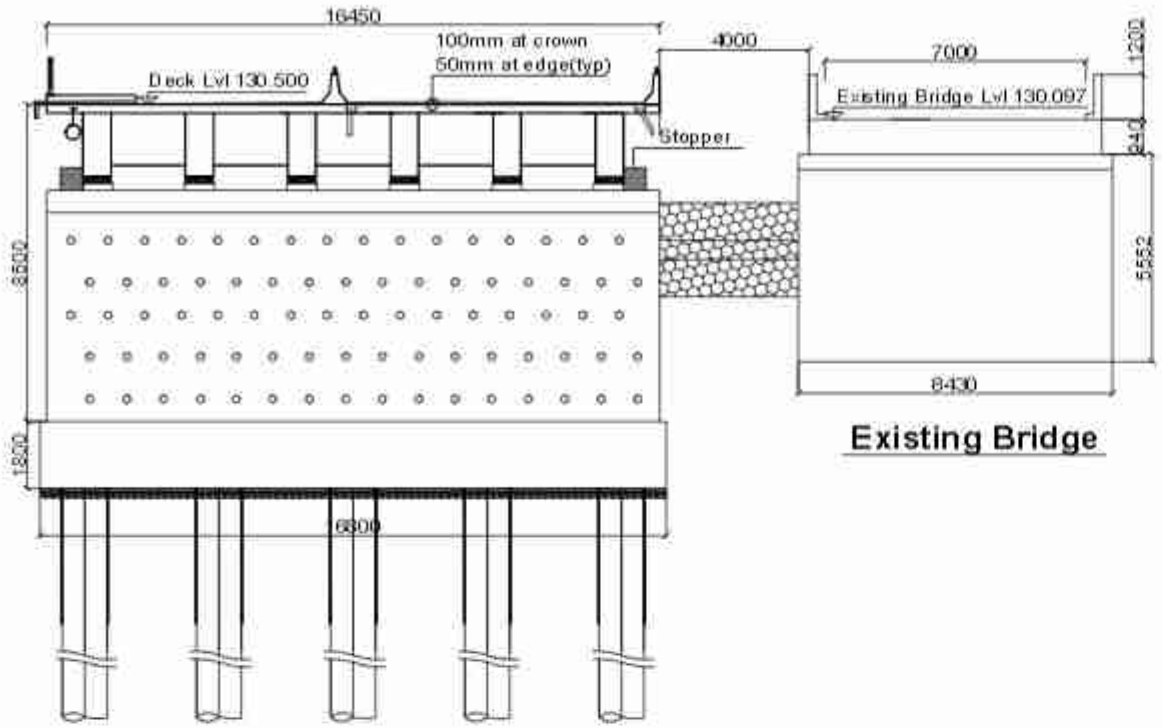

Existing Bridge

Elevation of Abutment
Scale:-1:250

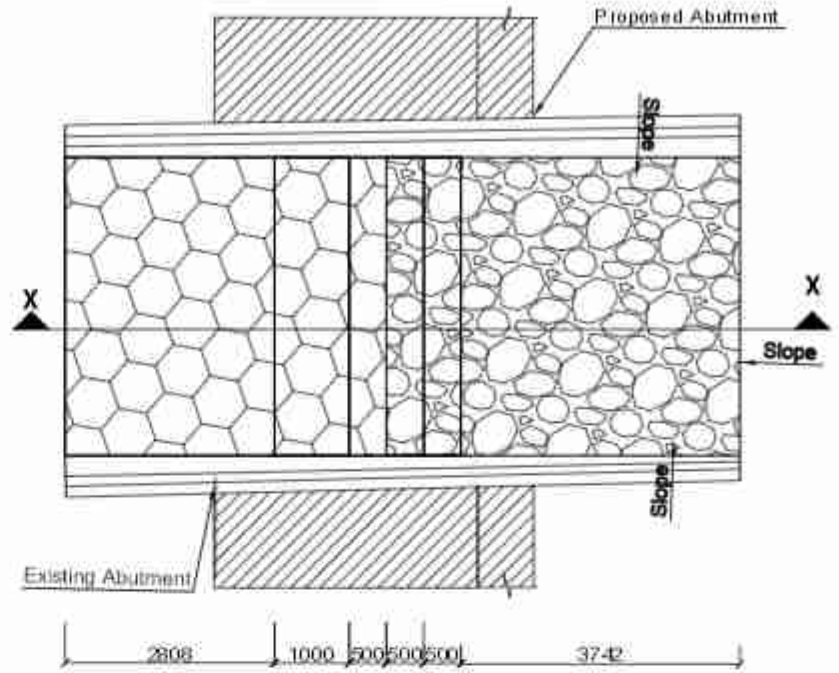

Detail Plan of X
(Transition Between Approch Embankmant)
Scale:-1:100

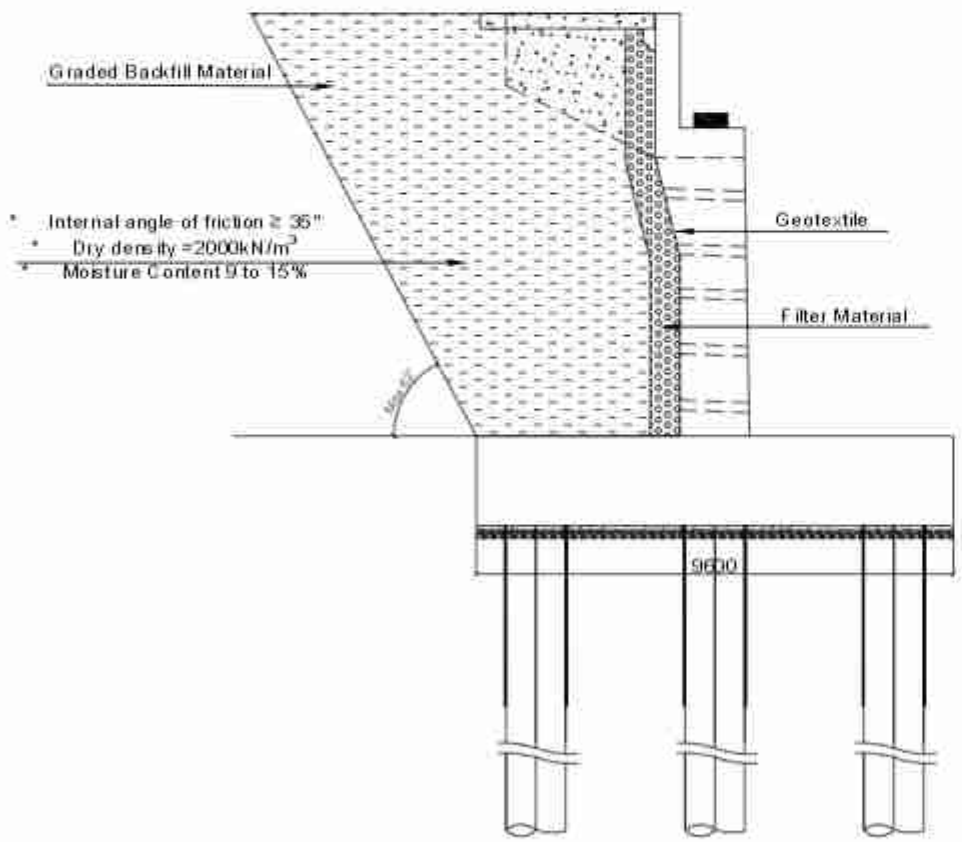

Detail of A
Scale:-1:150

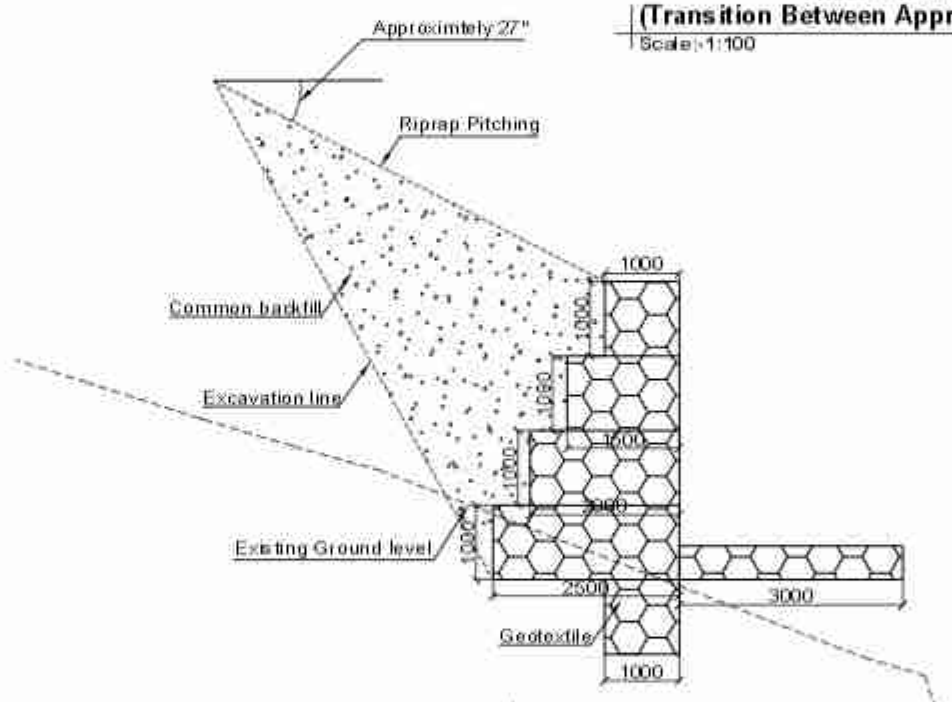

Section at X-X
Scale:-1:100

	Name(NEC Number)	Signature
P. Engineer	P. Upadhyaya (Civil A 675)	
Structure Engineer	K.P.Wagle(Civil A 127) / P.Shrestha(Civil A 676) / S.Bhattarai (Civil A 904)	
Hydrologist	Dr. P.C. Jha(Civil A 166) / S. Adhikari (Civil A 408)	
Geotechnical Engineer	A. Adhikari(ka 199) / Dr. V. R. S. Shahi	

Government of Nepal
Ministry of Physical Infrastructure and Transport
Department of Roads
Project Directorate Office (ADB)
SASEC Highway Improvement Project-
Project Preparatory Consultant (SHIP-PPC)
ADB Loan No: 3722-NEP

CONSULTANT:
Soosung Engineering Co. Ltd, Korea
in association with
ERMC P (Ltd)
and
Tech Studio of Engineeering Nepal

IMPLEMENTING AGENCY:
DOR, DCID

ROAD NAME:
East West Highway (H01)
Butwal - Gorusinghe Section

SHEET TITLE:
General Arrangement of
Bamaha Bridge
(46/H001/296 A)

SCALE:
As Shown

	NAME	SIGNATURE	REV NO.	DESCRIPTION
Designed by:	Saroj Bhattarai			
Checked by:	P. Upadhyaya			
Approved by:	Dr. T.H.Choi			

DATE: November , 2022
DWG.NO.: 296_Bamaha
SHEET NO.: 04/25

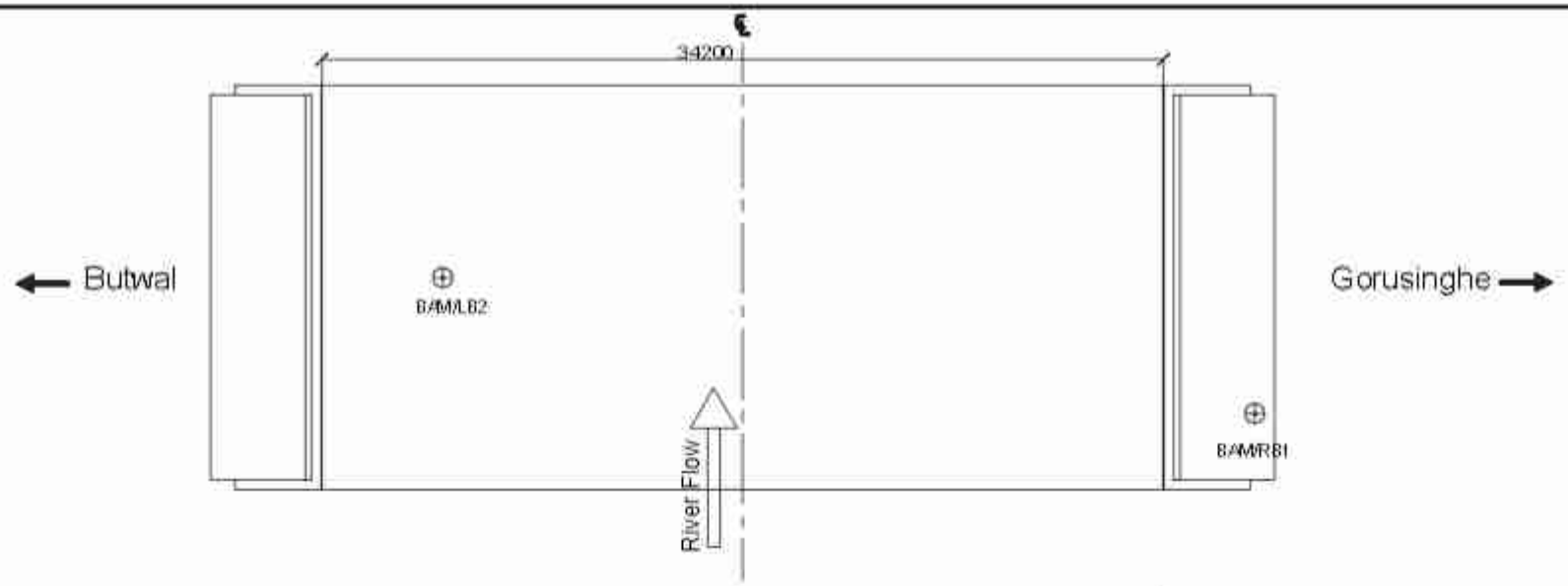

Borehole No : BAM/LB-2
Easting : 83° 23' 7.81"
Northing : 27° 40' 56.79"
Elevation, m : 125.364
Borehole No : BAM/RB-1
Easting : 83° 23' 6.79"
Northing : 27° 40' 56.16"
Elevation, m : 125.819

Note :-
MSL :- Maximum Scour Level
HFL :- High Flood Level
LBL :- Lowest Bed Level
RL :- Reduced Level
PL :- Pile Length

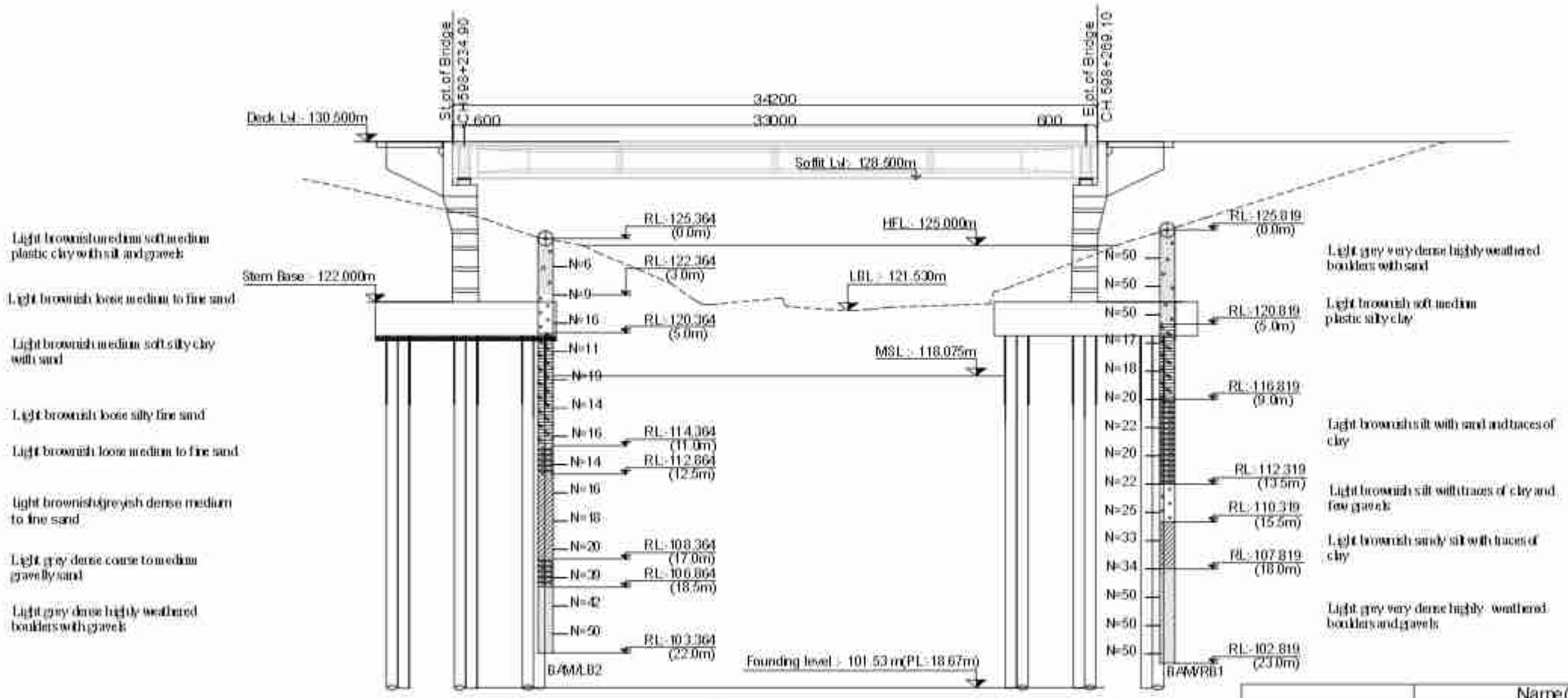

Bore Hole Detail
Scale :- 1:300

NOTE ON SUB-SOIL PROFILE
The sub-soil profile shown here is based on information obtained from the investigation bore-holes at the locations as shown.The actual soil type away from the vicinity of the boreholes may differ .

Location	Design Pile Length m	Design Working load on pile (non - seismic case)kn	Allowable Bearing Capacity on pile (Scour case) kn	Allowable Bearing Capacity of the Pile (Non Scour case)kn
Abutment	18.67	2199	2612	3399
Pier	0	0	0	0

	Name(NEC Number)	Signature
P. Engineer	P. Upadhyaya (Civil A 675)	
Structure Engineer	K.P.Wagle(Civil A 127) / P.Shrestha(Civil A 676) / S.Bhattarai (Civil A 904)	
Hydrologist	Dr. P.C. Jha(Civil A 166) / S. Adhikari (Civil A 408)	
Geotechnical Engineer	A. Adhikari(ka 199) / Dr. V. R. S. Shahi	

Government of Nepal
Ministry of Physical Infrastructure and Transport
Department of Roads
Project Directorate Office (ADB)
SASEC Highway Improvement Project-
Project Preparatory Consultant (SHIP-PPC)
ADB Loan No: 3722-NEP

CONSULTANT:
Soosung Engineering Co. Ltd, Korea
in association with
ERMC P (Ltd)
and
Tech Studio of Engineering Nepal

IMPLEMENTING AGENCY:
DOR, DCID

ROAD NAME:
East West Highway (H01)

Butwal - Gorusinghe Section

SHEET TITLE:
Bore Log of **Bamaha Bridge** (46/H001/296_A)

SCALE:
1:500

	NAME	SIGNATURE	REV NO.	DESCRIPTION
Designed by:	Saroj Bhattarai			
Checked by:	P. Upadhyaya			
Approved by:	Dr. T.H. Choi			

DATE: November , 2022
DWG.NO.: 296_Bamaha
SHEET NO.: 05/25

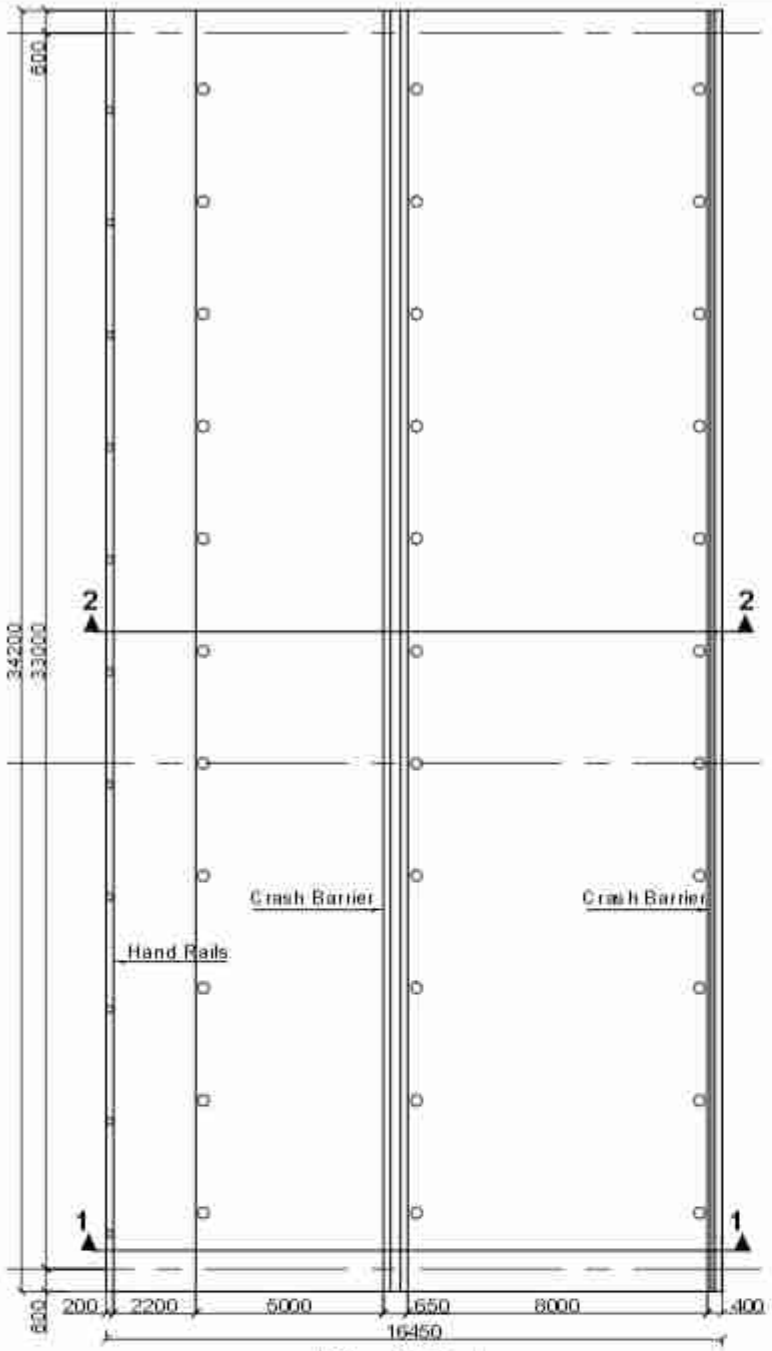

Plan Of Deck
Scale:-1:200

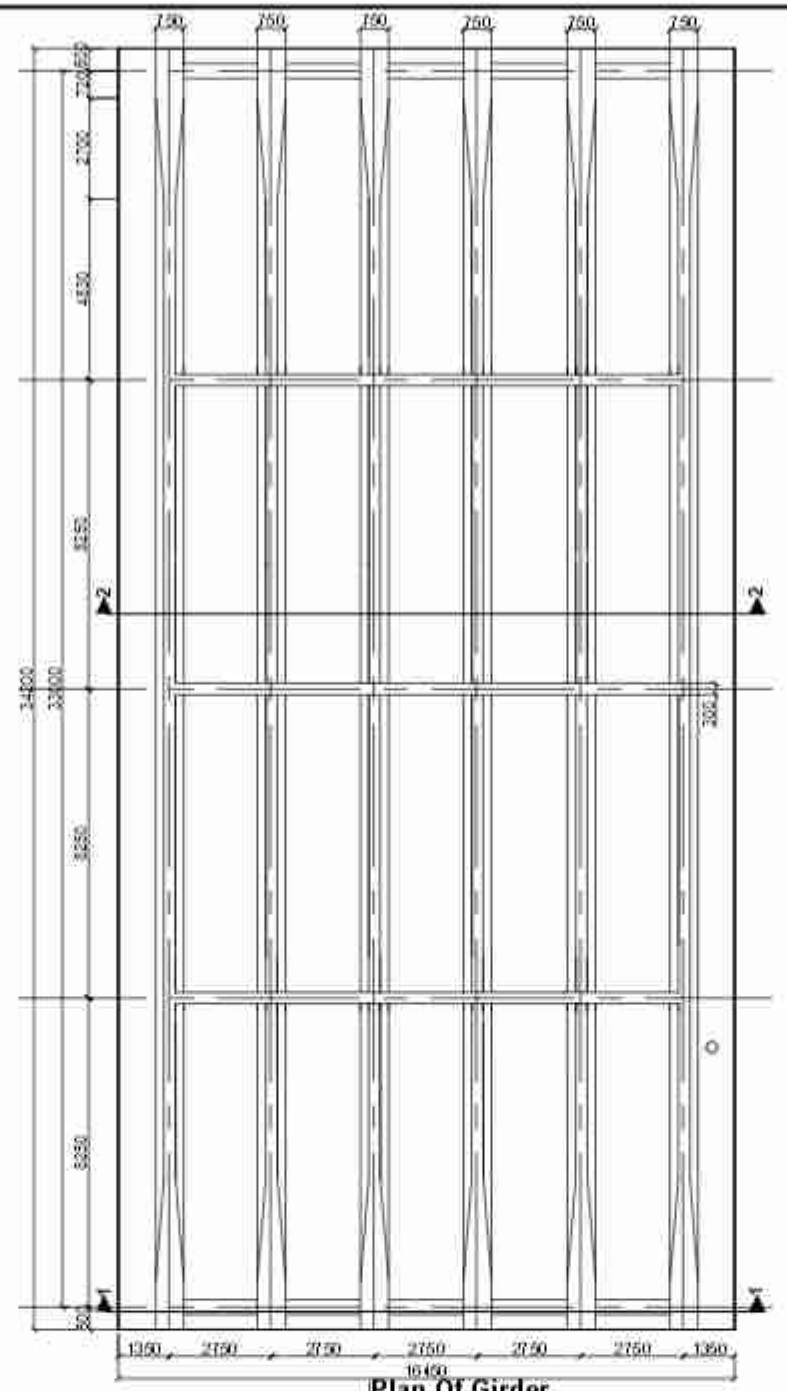

Plan Of Girder
Scale:-1:200

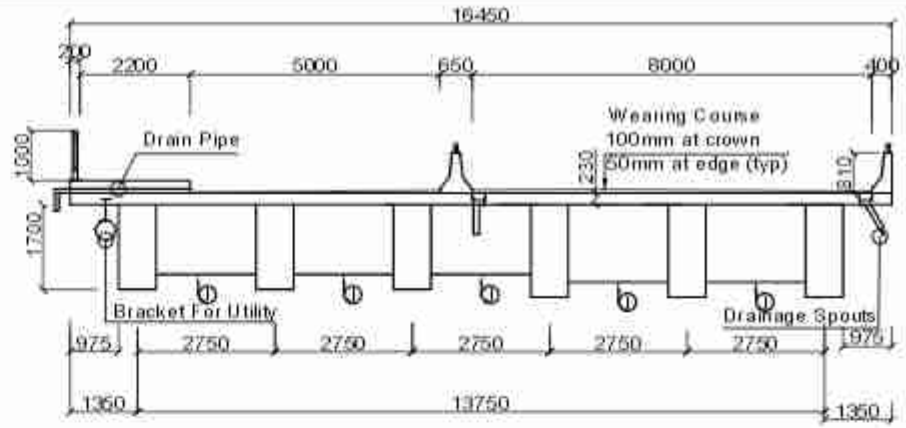

Section At 1-1
Scale:-1:150

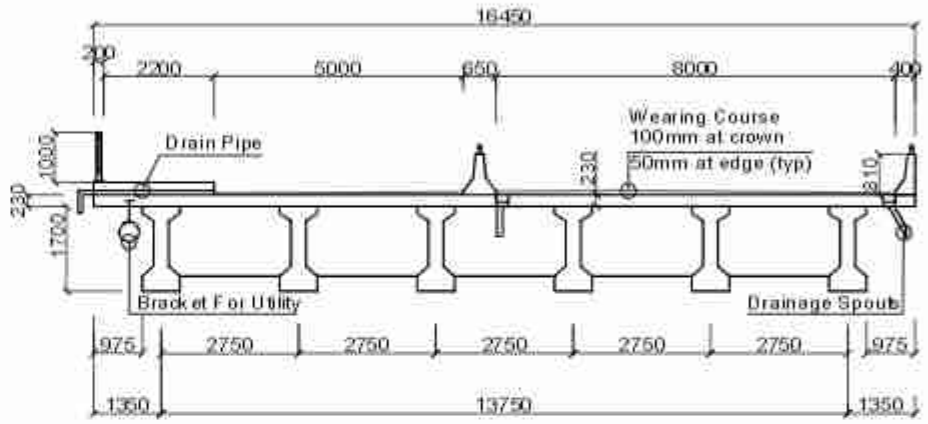

Section At 2-2
Scale:-1:150

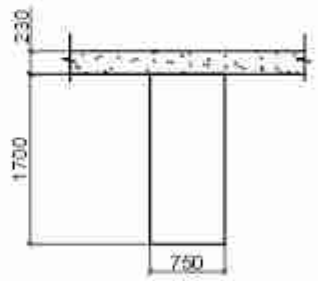

Section 1-1 Main Girder
Scale:-1:75

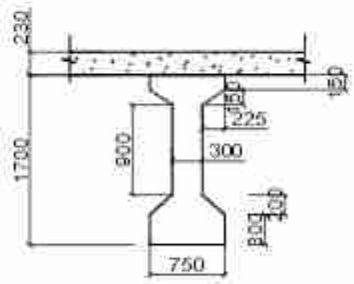

Section 2-2 Main Girder
Scale:-1:75

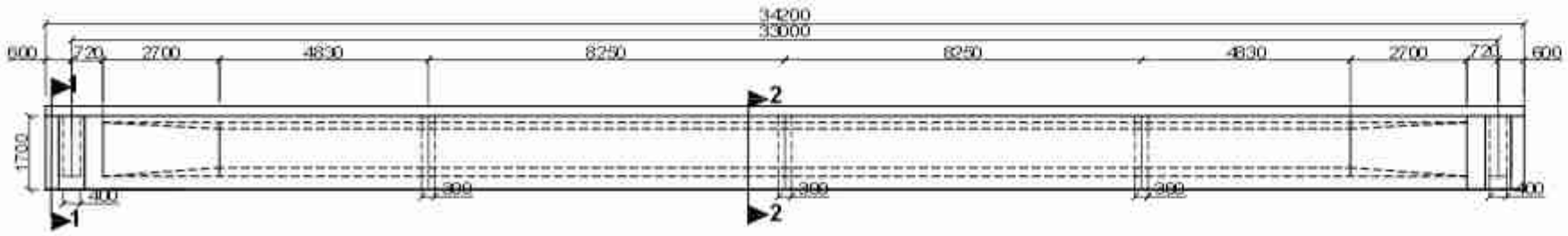

Longitudinal Sectional Elevation
Scale:-1:150

NOTE:
The bridge has been designed to safely carry three driving lanes. If required in future the footpath can be used as driving lane, moving the crash barrier to the location of the hand-rails.

NOTE:
For maintenance, the deck shall be simultaneously jacked up at the locations marked "J"

Government of Nepal Ministry of Physical Infrastructure and Transport **Department of Roads** **Project Directorate Office (ADB)** **SASEC Highway Improvement Project-** Project Preparatory Consultant (SHIP-PPC) ADB Loan No: 3722-NEP	**CONSULTANT:** Soosung Engineering Co. Ltd, Korea in association with ERMC P (Ltd) and Tech Studio of Engineeering Nepal	**IMPLEMENTING AGENCY:** **DOR, DCID** **ROAD NAME:** **East West Highway (H01)** **Butwal - Gorusinghe Section**	**SHEET TITLE:** Details of Superstructure of **Bamaha Bridge** (46/H001/296_A)	**SCALE:** As Shown		NAME	SIGNATURE	REV NO.	DESCRIPTION	DATE: November, 2022
					Designed by:	Saroj Bhattarai				DWG.NO.: 296_Bamaha
					Checked by:	P. Upadhyaya				
					Approved by:	Dr. T.H.Choi				SHEET NO.: 06/25

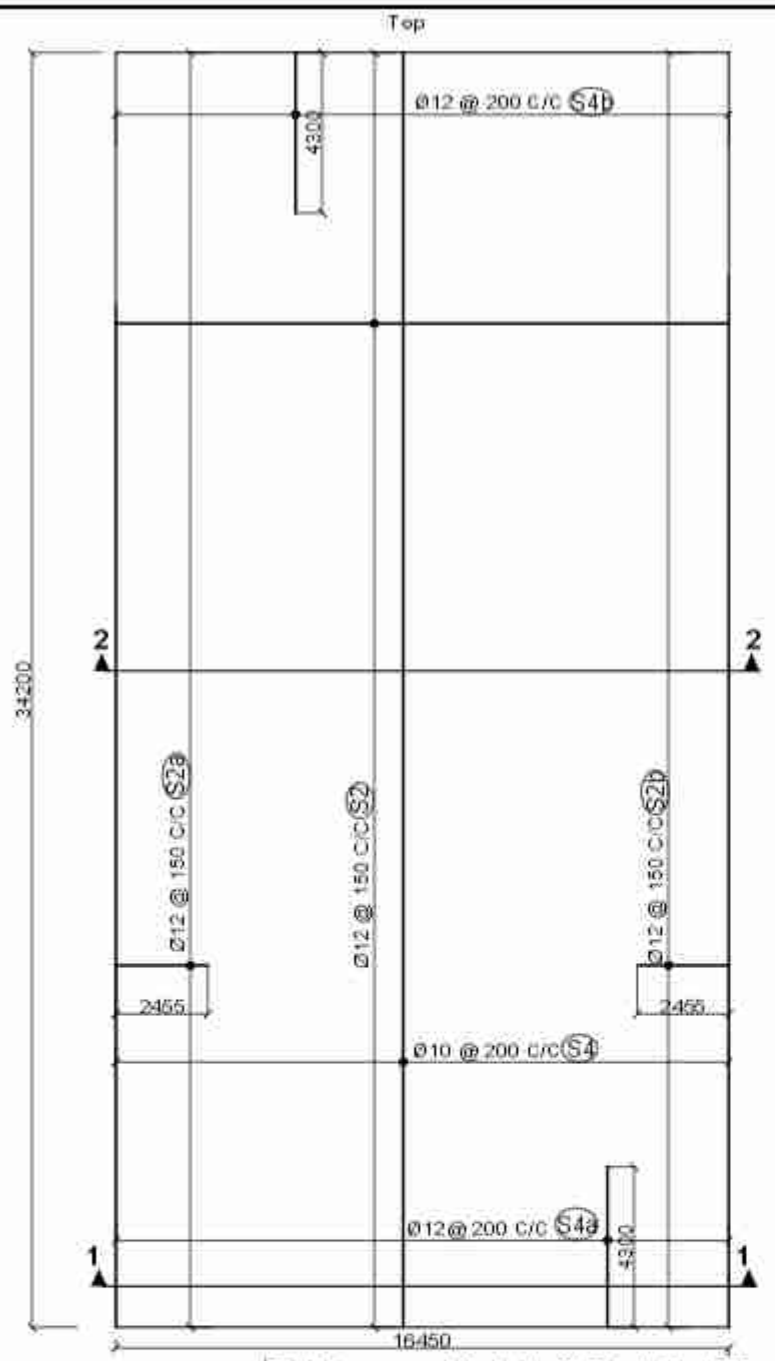

Reinforcement Details Of Deck Slab (Top Face)
Scale:- 1:200

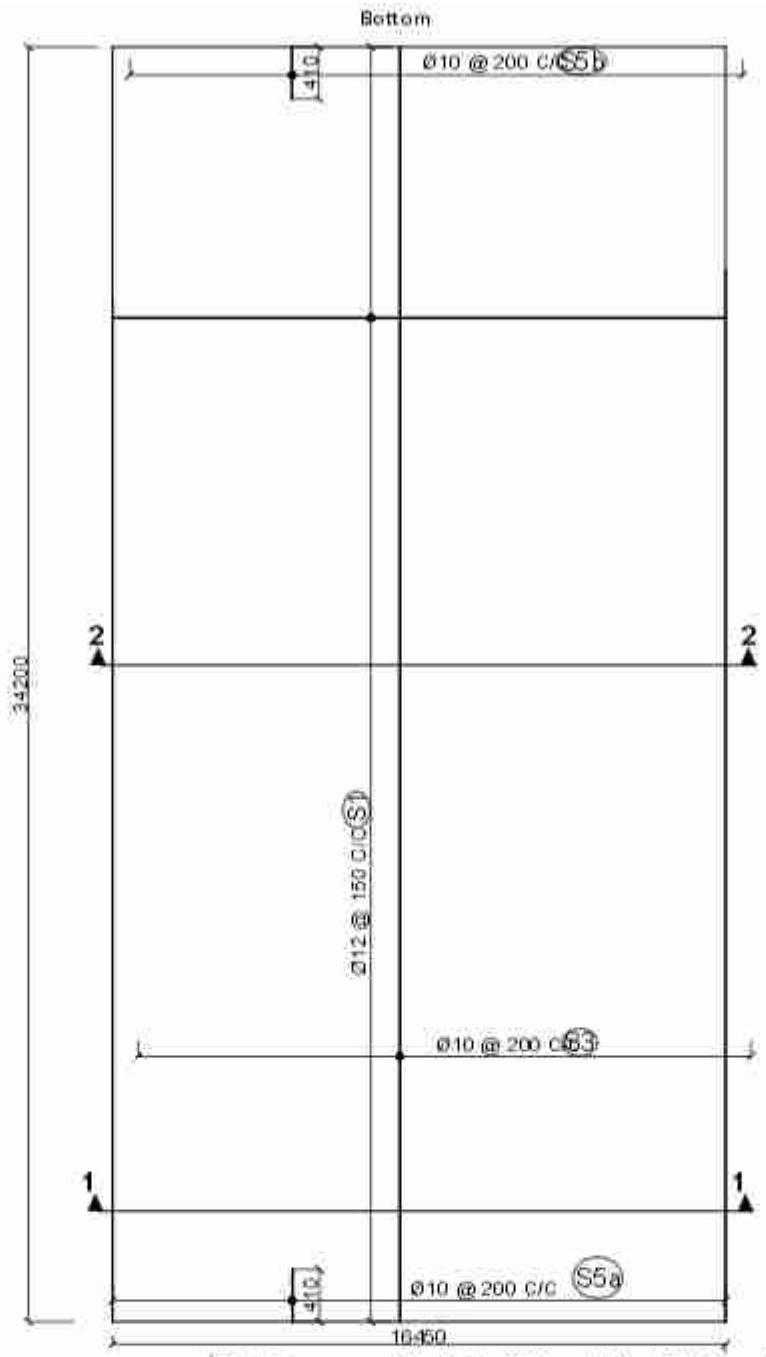

Reinforcement Details Of Deck Slab (Bottom Face)
Scale:- 1:200

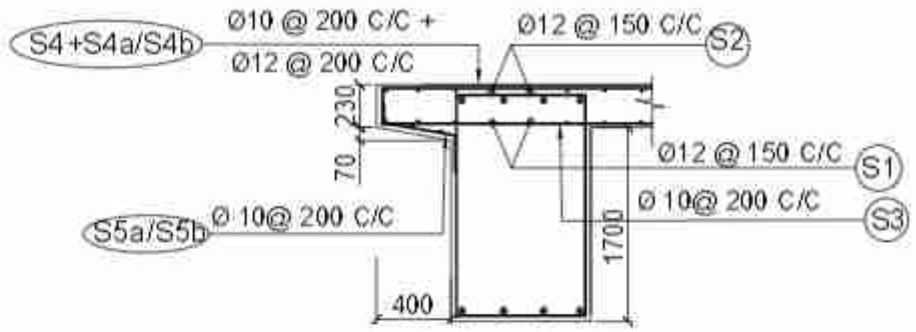

Reinforcement Details at Deck Extension (Between The Main Girder)
Scale :-1:50

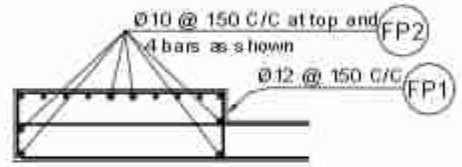

Reinforcement Details At Footpath
Scale :- 1:50

NOTE:

1.On Shear Connection:
The transverse bars of the deck slab(S2) shall be tied to vertical stirrups of the longitudinal girders.

2.Top Surface of the Main Girder:
Surface to be roughened by wire brush immediately after initial setting. The surface shall be properly cleaned by pressure blower prior to casting of the deck concrete

3.On Wearing Course:
The level of wearing course along the longitudinal direction shall be kept horizontal throughout the length of the deck. The thickness of wearing course towards the ends along the deck shall be increased suitably to compensate for the slope due to hogging of the girder by pre stress.

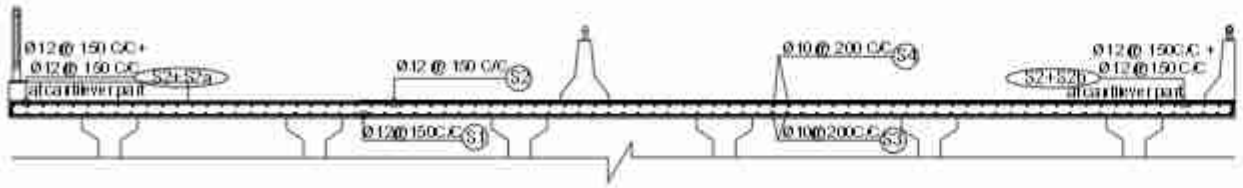

Section At 2-2
Scale:- 1:100

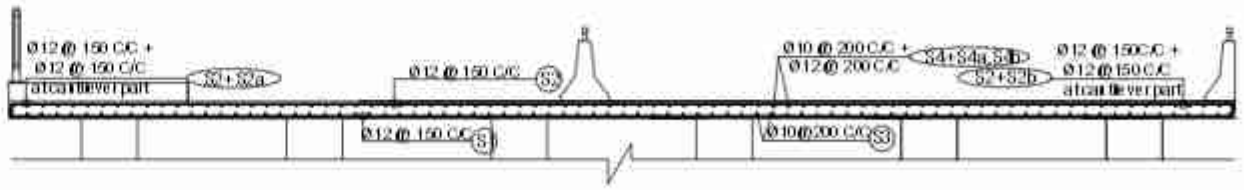

Section At 1-1
Scale:- 1:100

Government of Nepal Ministry of Physical Infrastructure and Transport **Department of Roads** **Project Directorate Office (ADB)** **SASEC Highway Improvement Project-** Project Preparatory Consultant (SHIP-PPC) ADB Loan No: 3722-NEP	**CONSULTANT:** Soosung Engineering Co. Ltd, Korea in association with ERMC P (Ltd) and Tech Studio of Engineeering Nepal	**IMPLEMENTING AGENCY:** **DOR, DCID** **ROAD NAME:** **East West Highway (H01)** **Butwal - Gorusinghe Section**	**SHEET TITLE:** Reinforcement Details of Slab of **Bamaha Bridge** (46/H001/296_A)	**SCALE:** As Shown		NAME	SIGNATURE	REV NO.	DESCRIPTION	DATE: November , 2022
					Designed by:	Saroj Bhattarai				DWG.NO.: 296_Bamaha
					Checked by:	P. Upadhyaya				
					Approved by:	Dr. T.H.Choi				SHEET NO.: 07/25

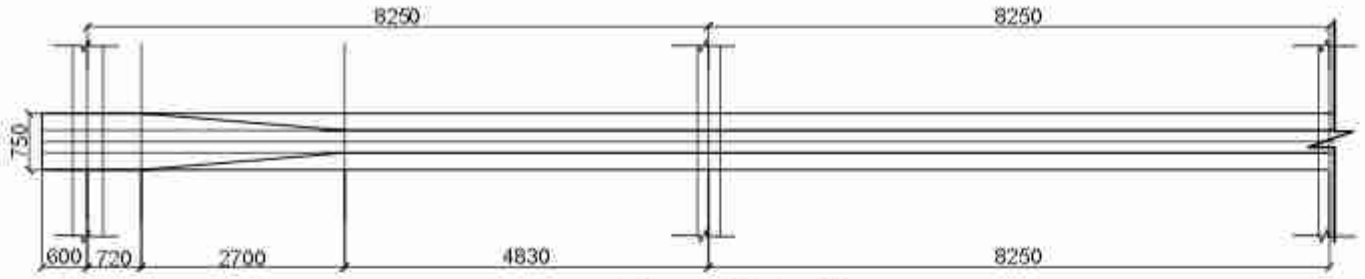

Plan Of Main Girder
Scale:-1:100

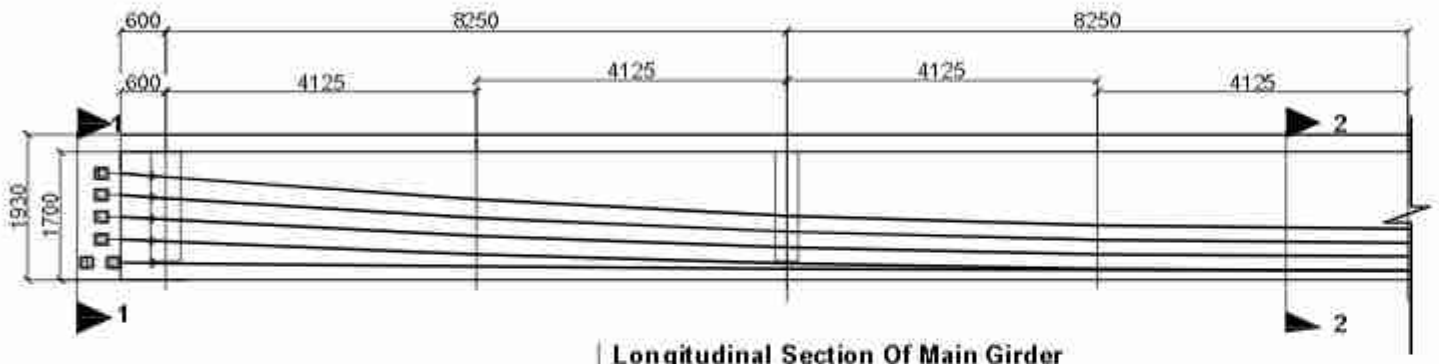

Longitudinal Section Of Main Girder
Scale:-1:100

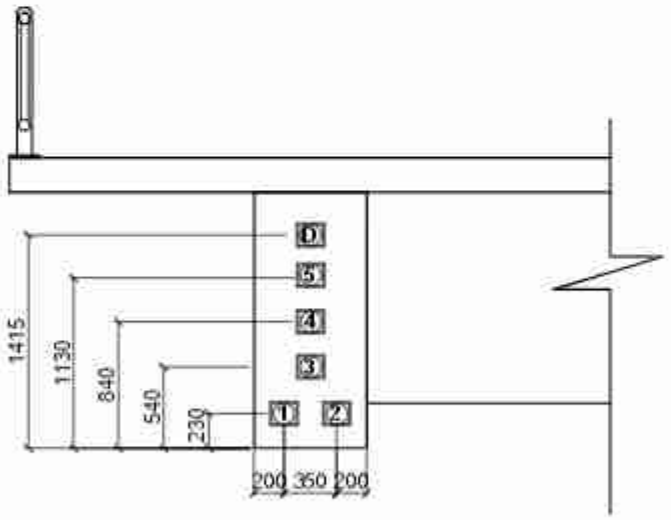

View 1-1
Scale:-1:50

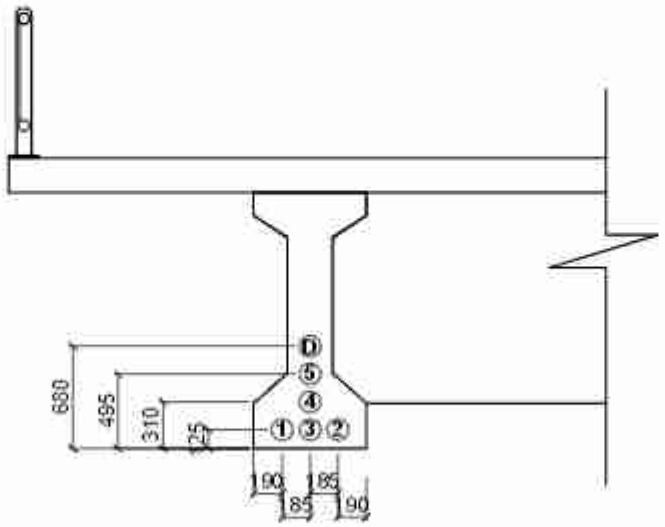

View 2-2
Scale:-1:50

Tendon Layout Data

	Anchor face		Bearing centerline		Intermediate sections						Mid span	
	-600		0		4125		8250		12375		16500	
TENDON	Y	Z	Y	Z	Y	Z	Y	Z	Y	Z	Y	Z
1	230	-175	223	-176	180	-180	150	-183	131	-185	125	-185
2	230	175	223	176	180	180	150	183	131	185	125	185
3	540	0	511	0	342	0	222	0	149	0	125	0
4	840	0	803	0	587	0	433	0	341	0	310	0
5	1130	0	1086	0	827	0	643	0	532	0	495	0
Dummy	1415	0	1366	0	1066	0	852	0	723	0	680	0

Y = Elevation of the tendon center from the girder soffit

Z = Horizontal distance of the tendon center from the centerline of the girder

Tendon Elongation and Emergence Angles

TENDON	Total Jacking Force KN	Total Extension of both sides	Emergence angle degree
1	2500	232	0.705
2	2500	232	0.705
3	2500	230	2.776
4	2500	230	3.544
5	2500	230	4.246
Dummy			4.913

NOTES ON PRE STRESSING:

1. All the prestressing operation shall commence after 28 days of casting,confirming that the cube specimen has achieved 100% of the prescribed compressive strength(M45) No Early Prestressingallowed.
2. Each prestressing Tendon shall be,multistrand cable comprising of 19 strands,each strand of 12.7mm diameter (19K13),7 ply low relaxation,Class-II,High Tensile Steel conforming IS 14268-2017 Maximum allowed total jacking force=2733kN
3. Prestressings operations shall be done in 2 stages as follows

Stage1

Precast girder only. After 28days of Casting.

Tendons to be stressed in stage 1 shall be in the following Sequence:

5	4	3	-	-	-	-	-

Total Jacking Force to each tendon in stage 1= 2500KN

Stage2

After 14 days of Casting of desk slab.

Tendons to be stressed in stage 2 shall be in the following Sequence:

2	1	-	-	-	-	-	-

Total Jacking Force to each tendon in stage 2= 2500KN

Casting of footpath,crash barriers and wearing course will done only after second stage prestressing.

4. Jacking of tendons shall be done from both ends. All the prestress losses(instant and long term) have been already considered in the design.
5. The composite action is considered only for live loads. There shall be no false-work or props to the girder during 2nd stage of prestressing.The formwork for deck slab can be supported on the main precast girders.
6. The cable elongation at their jacking ends,mentioned are based on the assumption that the Modulus of Elasticity of the cable steel is 1.95x10^5 Mpa.The manufacturers specification shallbe followed if provided.
7. The tendon ducts shall be properly secured to the rebars to maintain the profile throughout concreting process.
8. Thespecified profile and alignments of the tendon shall be strictly maintained.If required,the reinforcement bars can be suitably respositioned or slightly bent to accommodate the tendons as per the engineers instruction.

NOTES ON DUMMY CABLE

The cable marked "D" is for future tensioning or in case of emergency or excessive prestress loss.
No tendon shall be provided during construction but the sheating,anchorage block ,brusting reinforcement similar to the other tendons shall be properly installed.
The duct shall be left hollow ensuring it is free of debris inside.
The anchorage should be capped suitably to keep it free from ingress of foreign material and marked "D" to identify in future

Government of Nepal Ministry of Physical Infrastructure and Transport **Department of Roads** **Project Directorate Office (ADB)** **SASEC Highway Improvement Project-** **Project Preparatory Consultant (SHIP-PPC)** **ADB Loan No: 3722-NEP**	**CONSULTANT:** Soosung Engineering Co. Ltd, Korea in association with ERMC P (Ltd) and Tech Studio of Engineeering Nepal	**IMPLEMENTING AGENCY:** **DOR, DCID** **ROAD NAME:** **East West Highway (H01)** **Butwal - Gorusinghe Section**	**SHEET TITLE:** Reinforcement Details of Main Girder of **Bamaha Bridge** (46/H001/296_A)	**SCALE:** As Shown		NAME	SIGNATURE	REV NO.	DESCRIPTION	DATE: November , 2022
					Designed by:	Saroj Bhattarai				DWG.NO.: 296_Bamaha
					Checked by:	P. Upadhyaya				SHEET NO.: 08/25
					Approved by:	Dr. T.H.Choi				

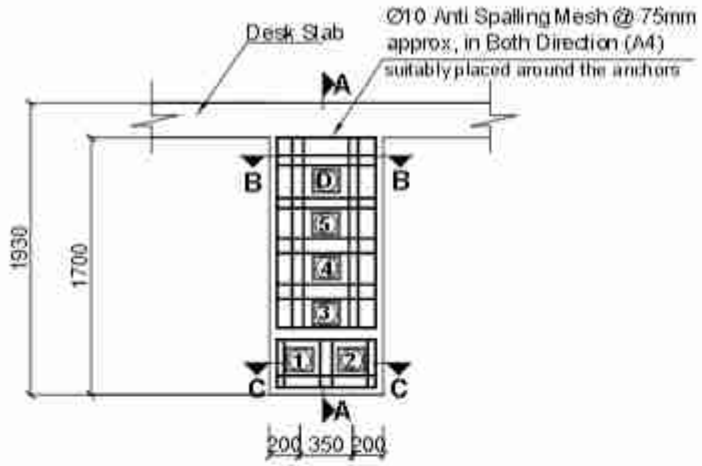

Anti Spalling Reainforcement
Scale:- 1:50

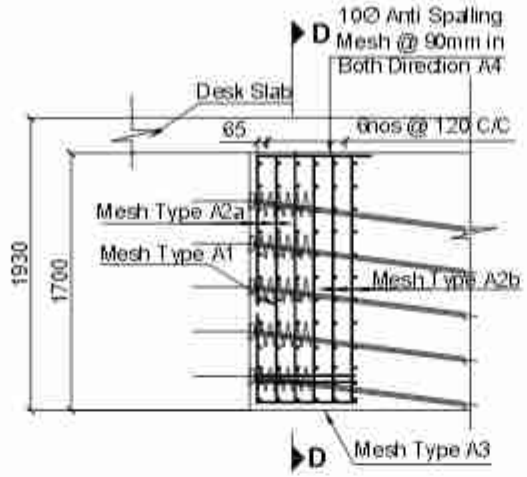

Section At A-A
Scale:- 1:50

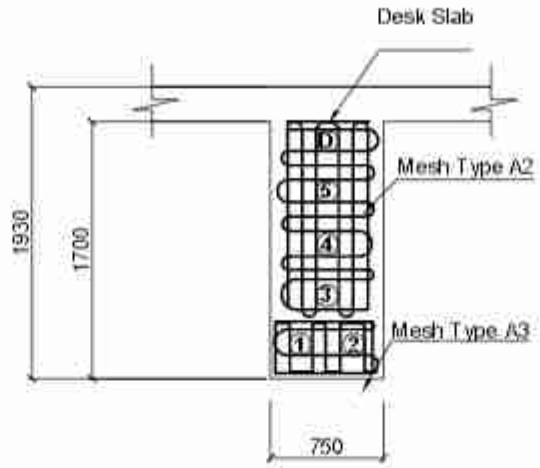

Section At D-D
Scale:- 1:50

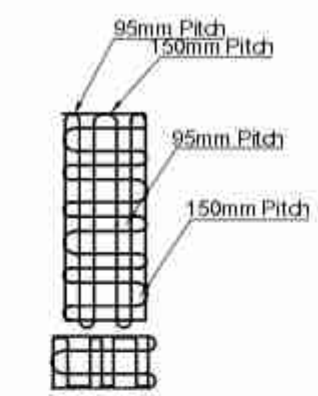

Near the Anchor Plate
Mesh Type A2a
Scale:- 1:50

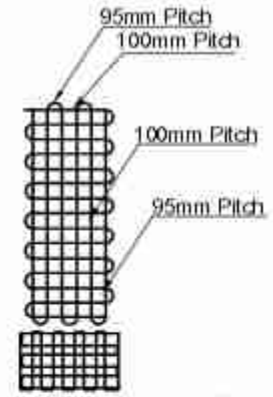

Away from Anchor Plate
Mesh Type A2b
Scale:- 1:50

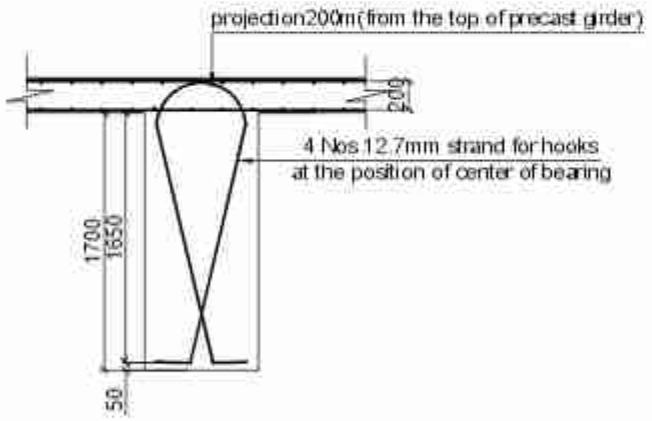

Hook Details At Both Ends Of Grider
Scale:- 1:50

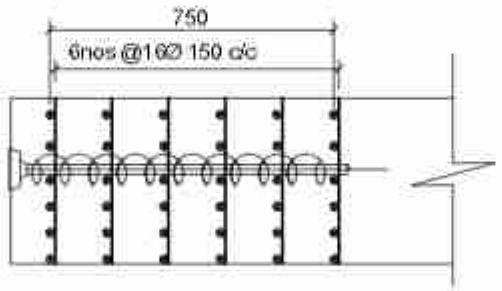

Section At B-B
Scale:- 1:20

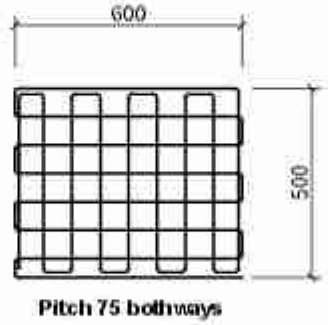

Mesh Type A3
Scale:- 1:20

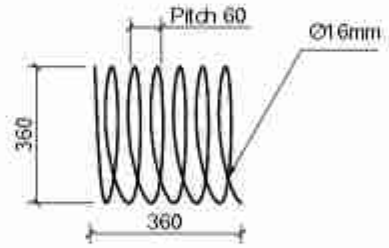

Typical Detail Of Spiral reainforcement A1
Scale:- 1:20

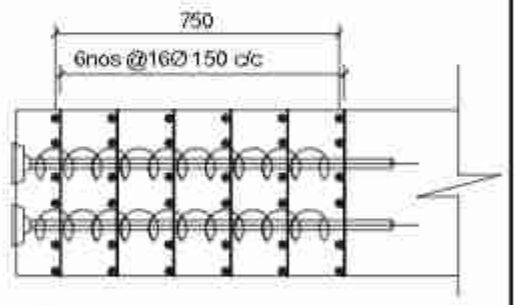

Section At C-C
Scale:- 1:20

NOTE:
1. The pitch of the mesh should be adjusted to accommodate the anchors and to maintain the duct profile.
2. The spiral and mesh reinforcement shown is indicative, use the anchorage manufacturer's specification if provided.

Government of Nepal Ministry of Physical Infrastructure and Transport **Department of Roads** **Project Directorate Office (ADB)** **SASEC Highway Improvement Project-** **Project Preparatory Consultant (SHIP-PPC)** **ADB Loan No: 3722-NEP**	**CONSULTANT:** Soosung Engineering Co. Ltd, Korea in association with ERMC P (Ltd) and Tech Studio of Engineeering Nepal	**IMPLEMENTING AGENCY:** **DOR, DCID**	**SHEET TITLE:**	**SCALE:**		**NAME**	**SIGNATURE**	**REV NO.**	**DESCRIPTION**	**DATE:**
		ROAD NAME: **East West Highway (H01)**	**Anchorage Details** of **Bamaha Bridge** (46/H001/296_A)	As Shown	Designed by:	Saroj Bhattarai				November , 2022
					Checked by:	P. Upadhyaya				**DWG.NO.:** 296_Bamaha
		Butwal - Gorusinghe Section			Approved by:	Dr. T.H.Choi				**SHEET NO.:** 09/25

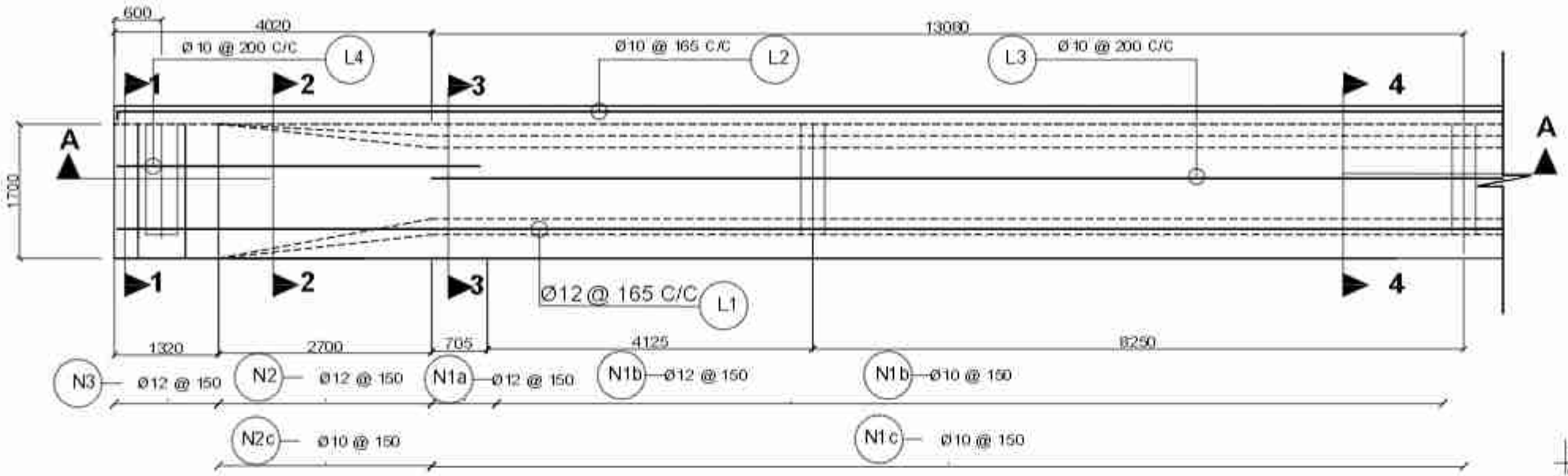

Reinforcement Details At Sectional Elevation Of Main Girder
Scale:- 1:75

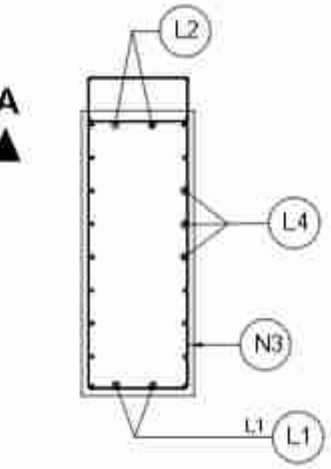

Typical Reinforcement of Precast Girder at End

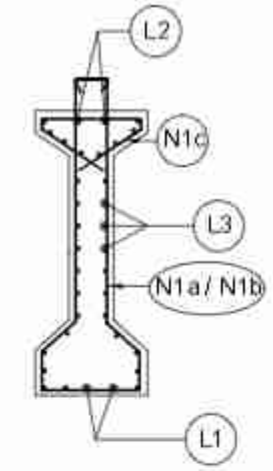

Typical Reinforcement of Precast Girder at Center

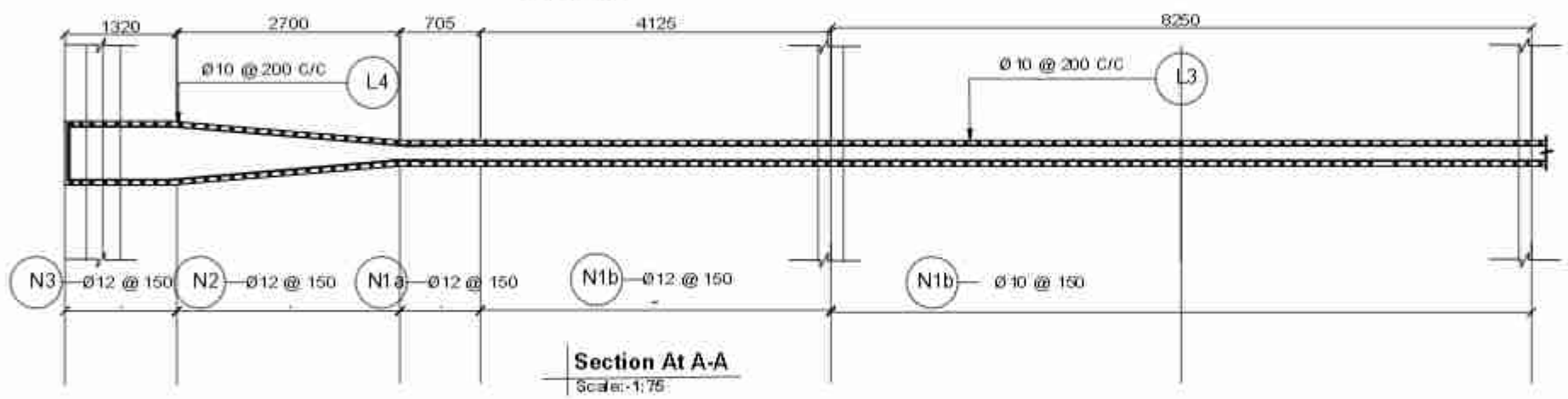

Section At A-A
Scale:- 1:75

NOTES:
The vertical stirrups of the main girder to be tied to the transverse reinforcement of the slab.

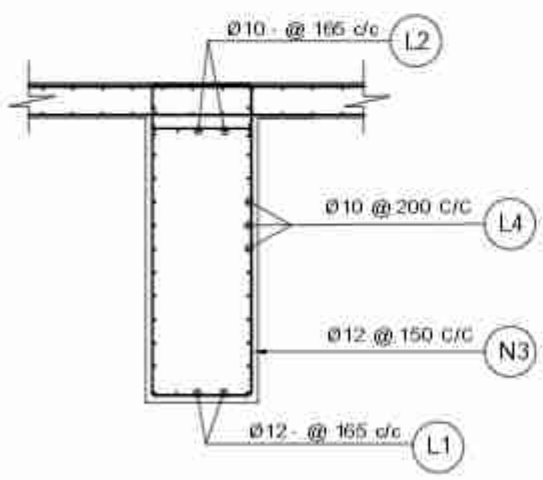

Section At 1-1
Scale:- 1:50

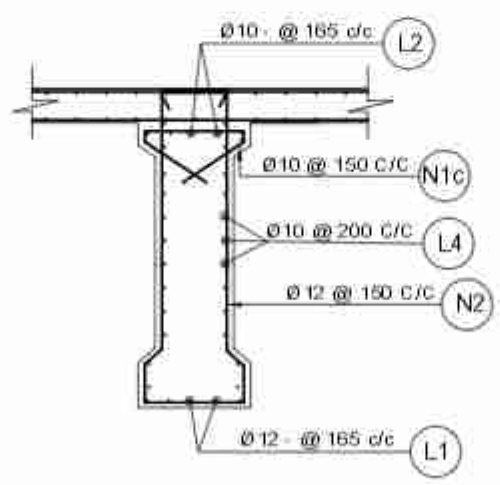

Section At 2-2
Scale:- 1:50

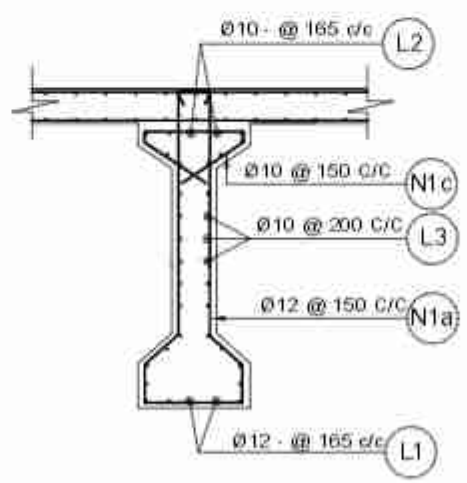

Section At 3-3
Scale:- 1:50

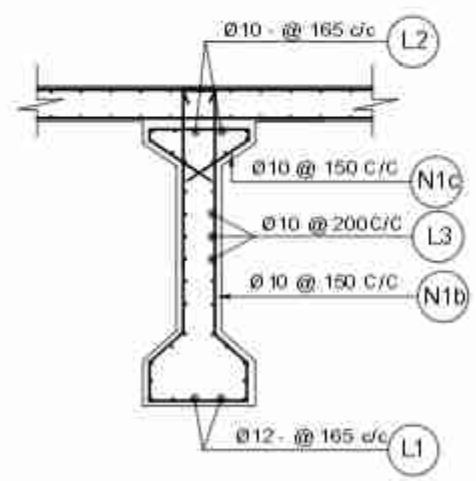

Section At 4-4
Scale:- 1:50

Government of Nepal Ministry of Physical Infrastructure and Transport **Department of Roads** **Project Directorate Office (ADB)** **SASEC Highway Improvement Project-** Project Preparatory Consultant (SHIP-PPC) ADB Loan No: 3722-NEP	**CONSULTANT:** Soosung Engineering Co. Ltd, Korea in association with ERMC P (Ltd) and Tech Studio of Engineeering Nepal	**IMPLEMENTING AGENCY:** **DOR, DCID** **ROAD NAME:** **East West Highway (H01)** **Butwal - Gorusinghe Section**	**SHEET TITLE:** Reinforcement Details of Girder of **Bamaha Bridge** (46/H001/296_A)	**SCALE:** As Shown		NAME	SIGNATURE	REV NO.	DESCRIPTION	DATE: November , 2022
					Designed by:	Saroj Bhattarai				DWG.NO.: 296_Bamaha
					Checked by:	P. Upadhyaya				
					Approved by:	Dr. T.H.Choi				SHEET NO.: 10/25

BAR BENDING SCHEDULE OF MAIN GIRDER

BAR ID	SHAPE OF BAR IN mm (NOT TO SCALE)	SPACING (MM)	Ø OF BARS (mm)	NO. OF BARS	LENGTH (m)	WEIGHT/LENGTH (kG/m)	TOTAL WEIGHT (kG)
N1a	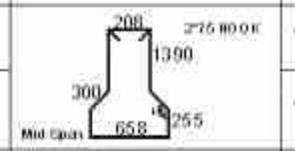	VARIES	12	66	5.110	0.888	299.425
N1b		VARIES	10	112	5.110	0.617	352.858
N1c	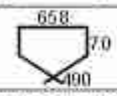	SPACING AS PER N1	10	178	1.780	0.617	195.344
N2	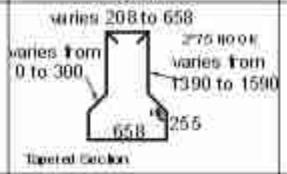	150	12	36	5.460	0.888	174.509
	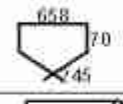	150	10	36	1.290	0.617	28.632
N3	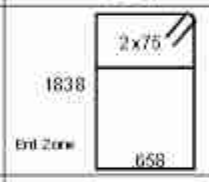	150	12	18	5.140	0.888	82.141
		150	10	18	0.778	0.617	8.634
L1	34120 Hor. Bar at Bottom	165	12	5	34.120	0.888	151.461
L2	34120 100 Hor. Bar at top of Precast Girder	165	10	5	34.320	0.617	105.798
L3	26.160 Hor. Bar at Side End Zone	200	10	22	26.160	0.617	354.831
L4	1280 27.10 600 650 Hor. Bar at Side (End Zone)	200	10	44	5.240	0.617	142.149
A1	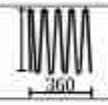	VARIES	16	12	7.930	1.578	150.195
		(Use Manufacturer's specifications if available)					
A2		150	16	12	18.650	1.578	353.232
		(Use Manufacturer's specifications if available) The Sketch shown here is indicative, for he purpose of estimate only. The pitch of the bars to be adjusted as per the tendon's size and positions					

BAR BENDING SCHEDULE OF MAIN GIRDER

BAR ID	SHAPE OF BAR IN mm (NOT TO SCALE)	SPACING (MM)	Ø OF BARS (mm)	NO. OF BARS	LENGTH (m)	WEIGHT/LENGTH (kG/m)	TOTAL WEIGHT (kG)
A3	PITCH=75 both way 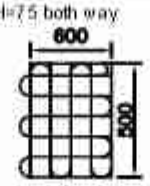 Over Bearing Layers =2	VARIES	10	4	10.200	0.617	25.155
TOTAL IN ONE GIRDER							2424.364
TOTAL IN ONE GIRDER (IN METRIC TON)							2.424

BAR BENDING SCHEDULE OF DECK SLAB

BAR ID	SHAPE OF BAR IN mm (NOT TO SCALE)	SPACING (MM)	Ø OF BARS (mm)	NO. OF BARS	LENGTH (m)	WEIGHT/LENGTH (kG/m)	TOTAL WEIGHT (kG)
S1	16370 100	150	12	234	16.570	0.888	3442.401
S2	16370 100	150	12	229	16.570	0.888	3368.845
S2a	100 2445 Additional Bars At Left Cantilever	150	12	229	2.550	0.888	518.440
S2b	2445 100 Additional Bars At Right Cantilever	150	12	229	2.550	0.888	518.440
S3	34110 155	MID DECK 200	10	83	34.420	0.617	1761.366
		LEFT CANT. 200	10	6	34.420	0.617	127.328
		RIGHT CANT. 200	10	6	34.420	0.617	127.328
S4	34110 155	200	10	83	34.420	0.617	1761.366
S4a	155 4300 Additional Top Bars At Deck End,Left	200	12	83	4.455	0.888	328.283
S4b	4300 155 Additional Top Bars At Deck End,right	200	12	83	4.455	0.888	328.283
S5a	100 410 200 For extended Deck,Left End	200	10	74	0.710	0.617	32.393
S5b	100 410 200 For extended Deck,Right End	200	10	74	0.710	0.617	32.393
TOTAL EXCLUDING FOOTPATHS KG							12346.865
TOTAL WEIGHT IN METRIC TON							12.347

BAR BENDING SCHEDULE OF RAISED FOOTPATH

BAR ID	SHAPE OF BAR IN mm (NOT TO SCALE)	SPACING (MM)	Ø OF BARS (mm)	NO. OF BARS	LENGTH (m)	WEIGHT/LENGTH (kG/m)	TOTAL WEIGHT (kG)
FP1	2320 400 400	150	12	229	5.640	0.888	1146.668
FP2	34110	150	10	21	34.110	0.617	441.633
ONE SIDE							1588.301
TOTAL WEIGHT IN METRIC TON							1.588

Government of Nepal Ministry of Physical Infrastructure and Transport **Department of Roads** **Project Directorate Office (ADB)** **SASEC Highway Improvement Project-** **Project Preparatory Consultant (SHIP-PPC)** **ADB Loan No: 3722-NEP**	**CONSULTANT:** Soosung Engineering Co. Ltd, Korea in association with ERMC P. (Ltd) and Tech Studio of Engineeering Nepal	**IMPLEMENTING AGENCY:** **DOR, DCID**	**SHEET TITLE:** B.B.S. of Slab & Main Girder of **Bamaha Bridge** (46/H001/296_A)	**SCALE:** As Shown		NAME	SIGNATURE	REV NO.	DESCRIPTION	DATE: November , 2022
		ROAD NAME: **East West Highway (H01)**			Designed by:	Saroj Bhattarai				DWG.NO.: 296_Bamaha
		Butwal - Gorusinghe Section			Checked by:	P. Upadhyaya				
					Approved by:	Dr. T.H.Choi				SHEET NO.: 11/25

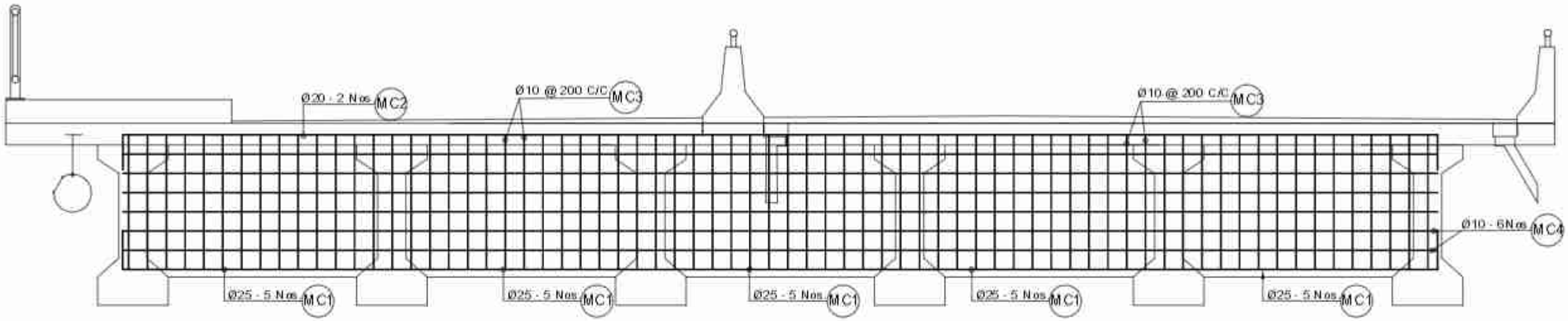

Intermediate Cross Girders
Scale:- 1:50

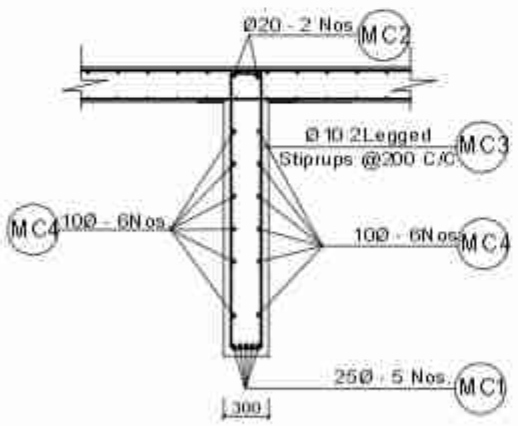

Section At A-A
Scale:- 1:50

NOTES:
Dowel bars similar to the longitudinal bars of the cross girders shall be pre-installed in the precast main girder before casting. The longitudinal bars of the cross girder shall be lapped to the dowel bars, which shall have a lap length of 60 dia. of the corresponding bars.

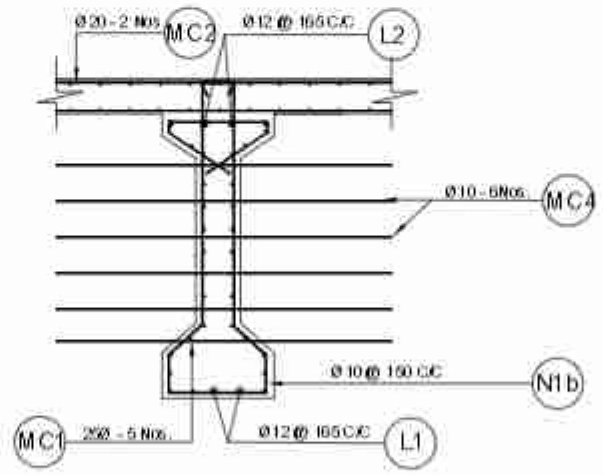

Dowel bar of Intermediate Cross Girder
Scale:- 1:50

BAR BENDING SCHEDULE OF INTERMEDIATE CROSS GIRDER

BAR ID	SHAPE OF BAR IN mm (NOT TO SCALE)	SPACING (MM)	Ø OF BARS (mm)	NO. OF BARS	LENGTH (m)	WEIGHT/LENGTH (KG/m)	TOTAL WEIGHT (KG)
MC1	400 400 14396	50	25	5	15.195	3.853	292.760
MC2	14396 400 400	200	20	2	15.195	2.466	74.946
MC3	275 1540 210 2 Legged @200MM C/C	200	10	69	3.020	0.617	153.999
MC4	13970 200 mm each face	300	10	12	13.970	0.617	103.357
TOTAL IN ONE GIRDER							625.062
TOTAL IN THREE GIRDER (IN METRIC TON)						3	1.875

Government of Nepal Ministry of Physical Infrastructure and Transport **Department of Roads** **Project Directorate Office (ADB)** **SASEC Highway Improvement Project-** Project Preparatory Consultant (SHIP-PPC) ADB Loan No: 3722-NEP	**CONSULTANT:** Soosung Engineering Co. Ltd, Korea in association with ERMC P (Ltd) and Tech Studio of Engineeering Nepal	**IMPLEMENTING AGENCY:** **DOR, DCID** **ROAD NAME:** **East West Highway (H01)** **Butwal - Gorusinghe Section**	**SHEET TITLE:** Reinforcement Details of Girder of **Bamaha Bridge** (46/H001/296_A)	**SCALE:** As Shown		NAME	SIGNATURE	REV NO.	DESCRIPTION	DATE: November , 2022
					Designed by:	Saroj Bhattarai				DWG.NO.: 296_Bamaha
					Checked by:	P. Upadhyaya				
					Approved by:	Dr. T.H.Choi				SHEET NO.: 12/25

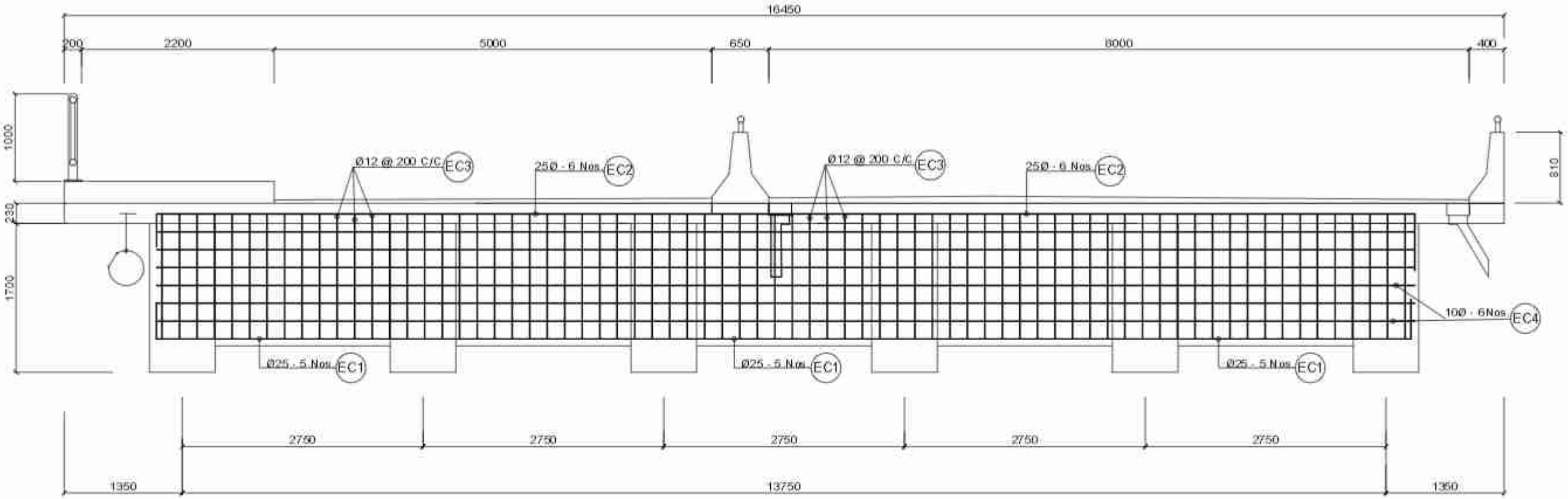

End Cross Girders
Scale:- 1:50

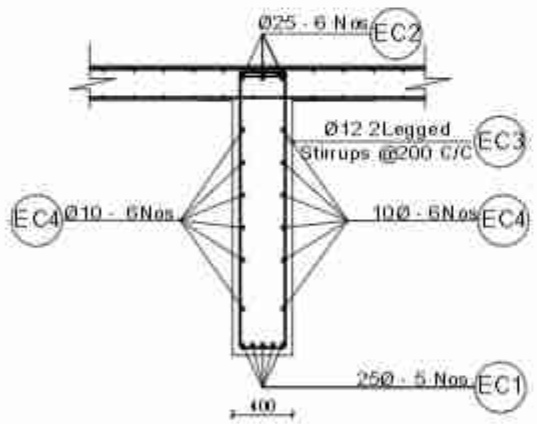

Section At B-B
Scale:- 1:50

NOTES:
Dowel bars similar to the longitudinal bars of the cross girders shall be pre-installed in the precast main girder before casting. The longitudinal bars of the cross girder shall be lapped to the dowel bars, which shall have a lap length of 60 dia. of the corresponding bars.

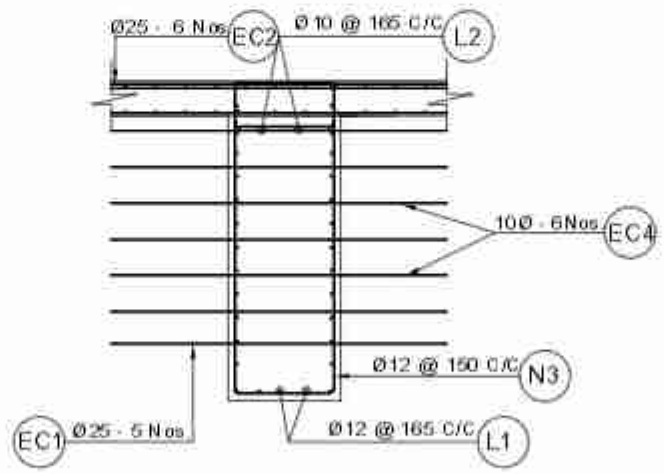

Dowel bar of End Cross Girder
Scale:- 1:50

BAR BENDING SCHEDULE OF END CROSS GIRDER

BAR ID	SHAPE OF BAR IN mm (NOT TO SCALE)	SPACING (MM)	Ø OF BARS (mm)	NO. OF BARS	LENGTH (m)	WEIGHT/LENGTH (kG/m)	TOTAL WEIGHT (kG)
EC1	400 400 14395	75	25	5	15.195	3.853	292.760
EC2	14395 400 400	150	25	6	15.195	3.853	351.312
EC3	275 1688 21 nogel groundwater C/C 308	200	12	73	3.842	0.888	249.002
EC4	14070 295 mm each bar	300	10	12	14.070	0.617	104.096
	TOTAL IN ONE GIRDER						997.170
	TOTAL IN TWO GIRDER (IN METRIC TON)					2	1.994

Government of Nepal Ministry of Physical Infrastructure and Transport **Department of Roads** **Project Directorate Office (ADB)** **SASEC Highway Improvement Project-** Project Preparatory Consultant (SHIP-PPC) ADB Loan No: 3722-NEP	**CONSULTANT:** Soosung Engineering Co. Ltd, Korea in association with ERMC P (Ltd) and Tech Studio of Engineeering Nepal	**IMPLEMENTING AGENCY:** **DOR, DCID** **ROAD NAME:** **East West Highway (H01)** **Butwal - Gorusinghe Section**	**SHEET TITLE:** Reinforcement Details of Girder of Bamaha Bridge (46/H001/296_A)	**SCALE:** As Shown		NAME	SIGNATURE	REV NO.	DESCRIPTION	DATE: November, 2022
					Designed by:	Saroj Bhattarai				DWG.NO.: 296_Bamaha
					Checked by:	P. Upadhyaya				
					Approved by:	Dr. T.H.Choi				SHEET NO.: 13/25

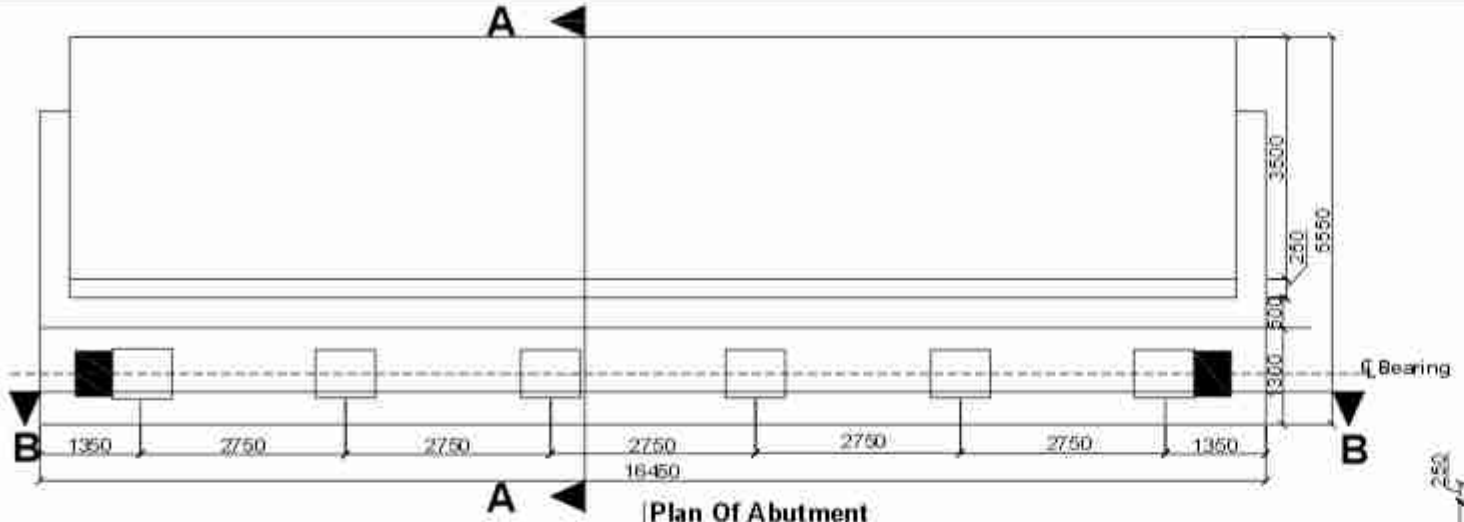

Plan Of Abutment
Scale:-1:100

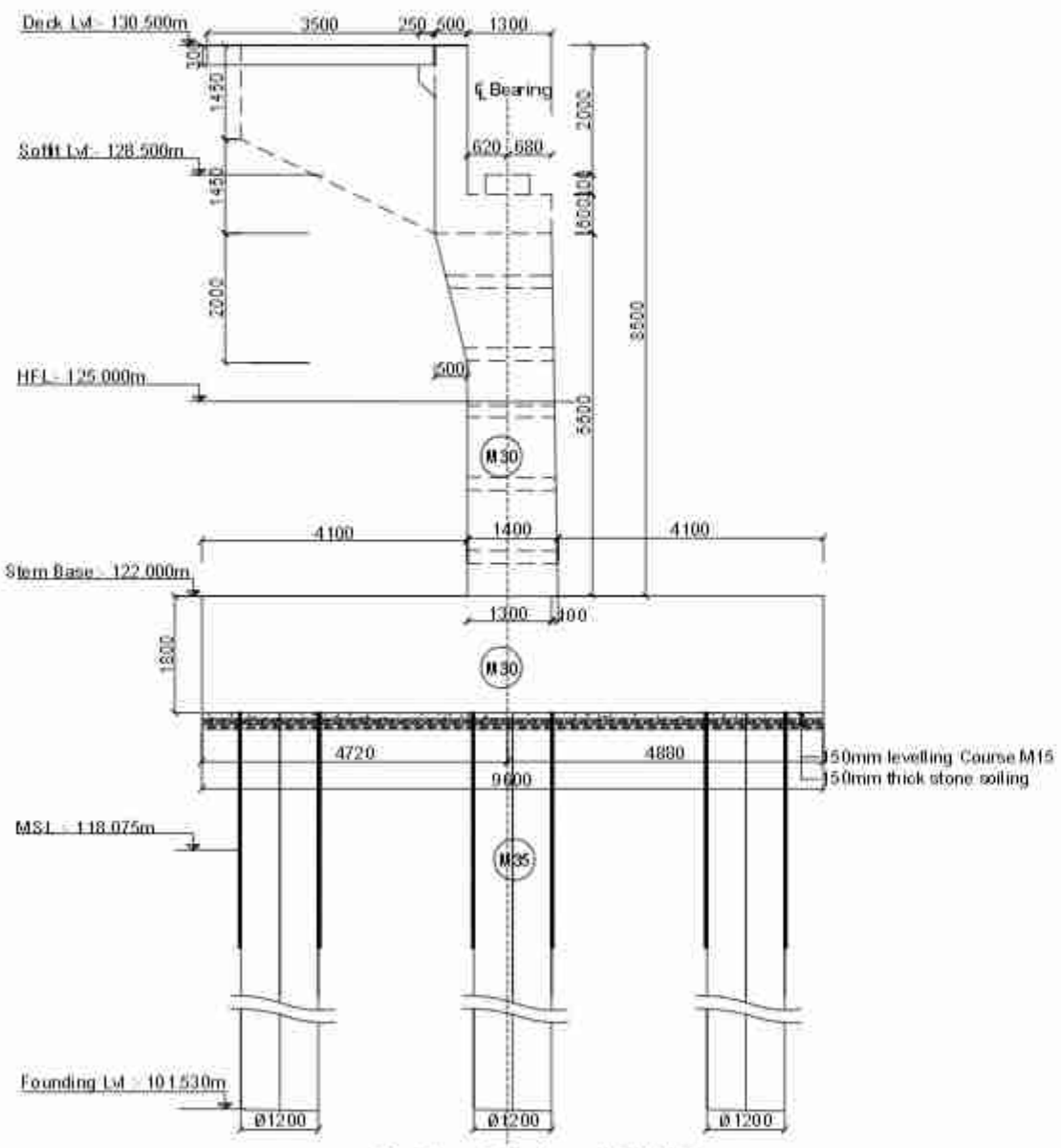

Section of Abutment At (A-A)
Scale:-1:100

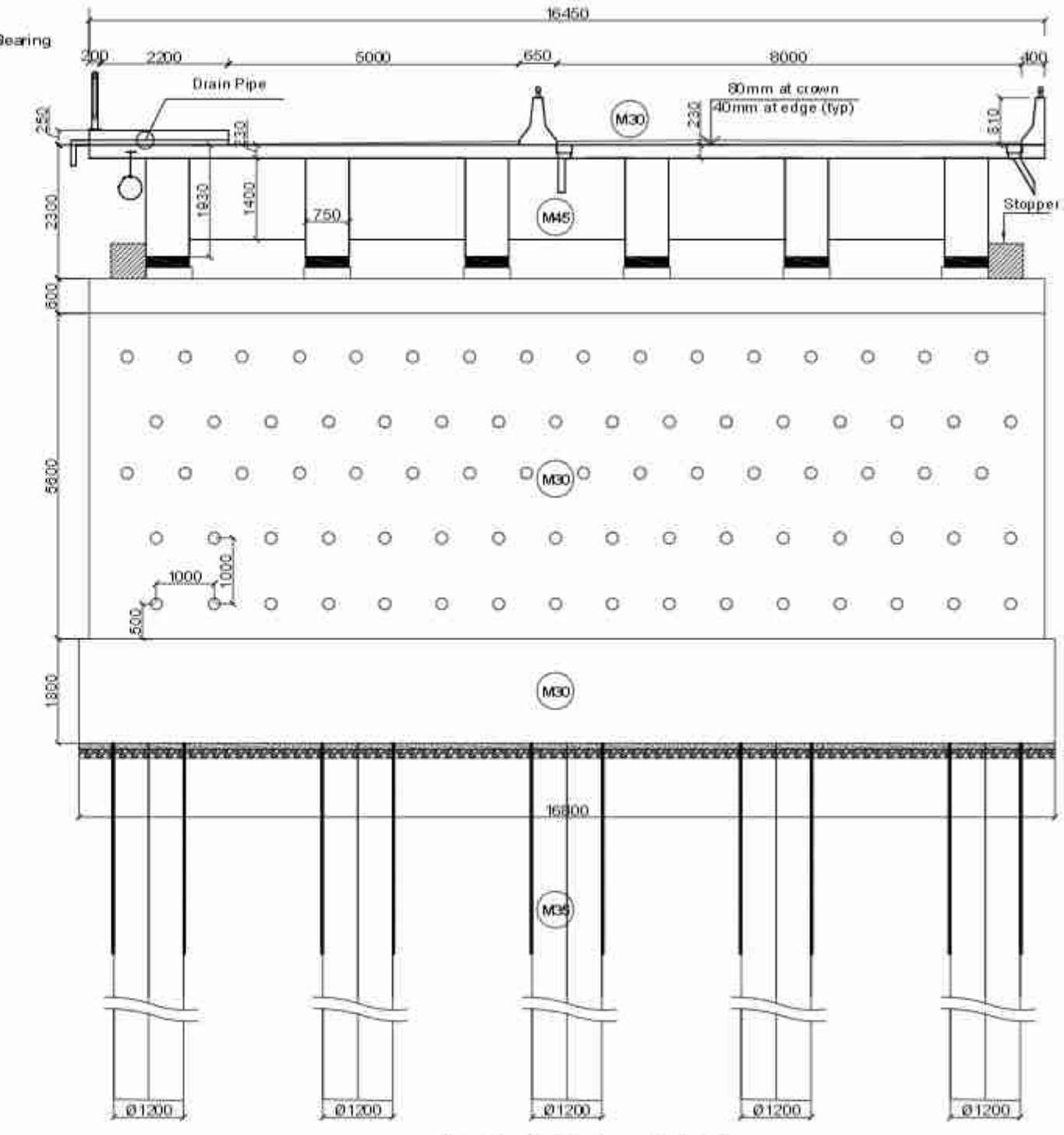

Section Of Abutment At (B-B)
Scale:-1:100

Government of Nepal Ministry of Physical Infrastructure and Transport **Department of Roads** **Project Directorate Office (ADB)** **SASEC Highway Improvement Project-** Project Preparatory Consultant (SHIP-PPC) ADB Loan No: 3722-NEP	**CONSULTANT:** Soosung Engineering Co. Ltd, Korea in association with ERMC P (Ltd) and Tech Studio of Engineeering Nepal	**IMPLEMENTING AGENCY:** **DOR, DCID** **ROAD NAME:** **East West Highway (H01)** **Butwal - Gorusinghe Section**	**SHEET TITLE:** Abutment Details of **Bamaha Bridge** (45/H001/296_A)	**SCALE:** As Shown		NAME	SIGNATURE	REV NO.	DESCRIPTION	DATE: November , 2022
					Designed by:	Saroj Bhattarai				DWG.NO.: 296_Bamaha
					Checked by:	P. Upadhyaya				
					Approved by:	Dr. T.H.Choi				SHEET NO.: 14/25

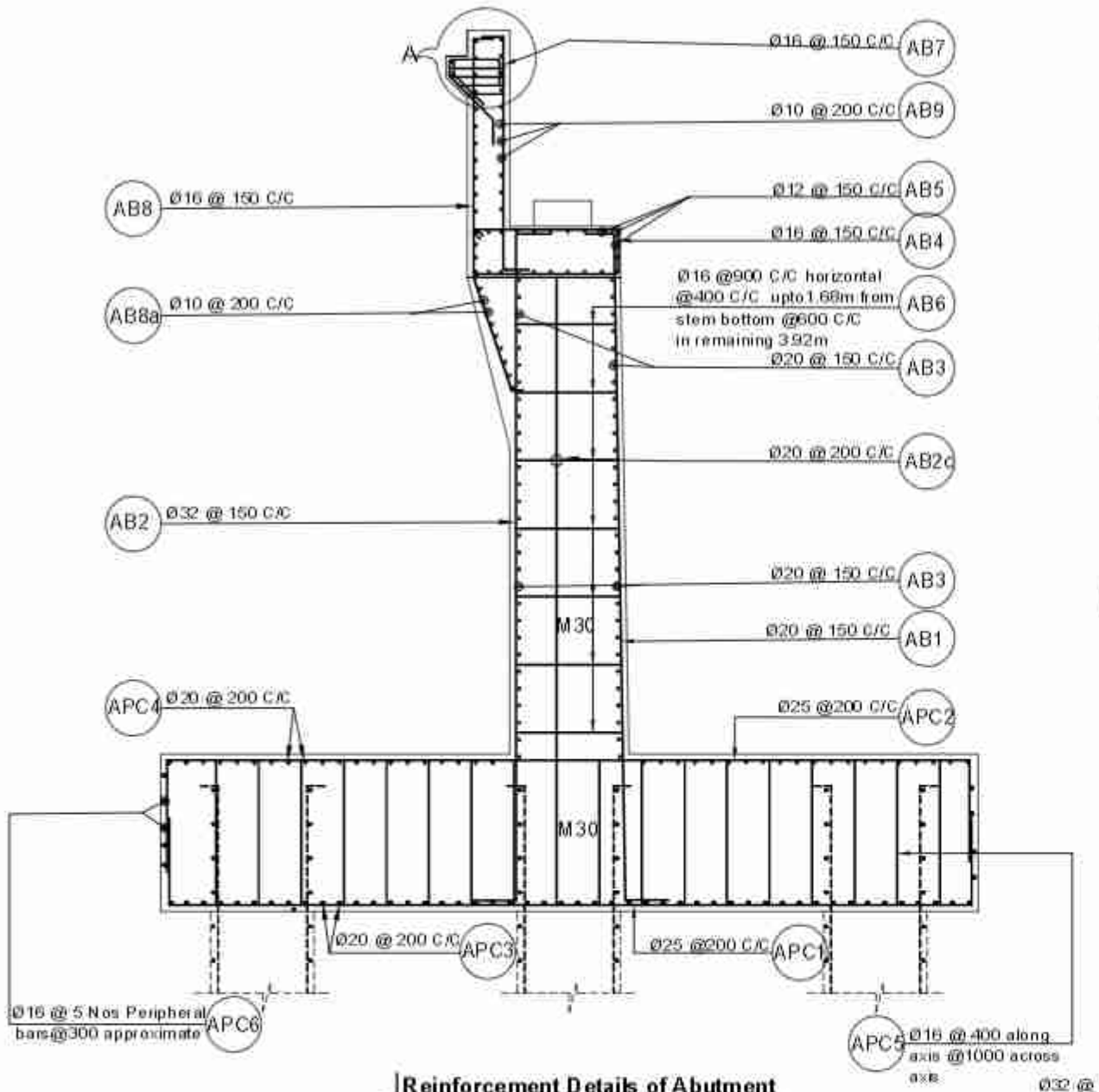

Reinforcement Details of Abutment
Scale:- 1:75

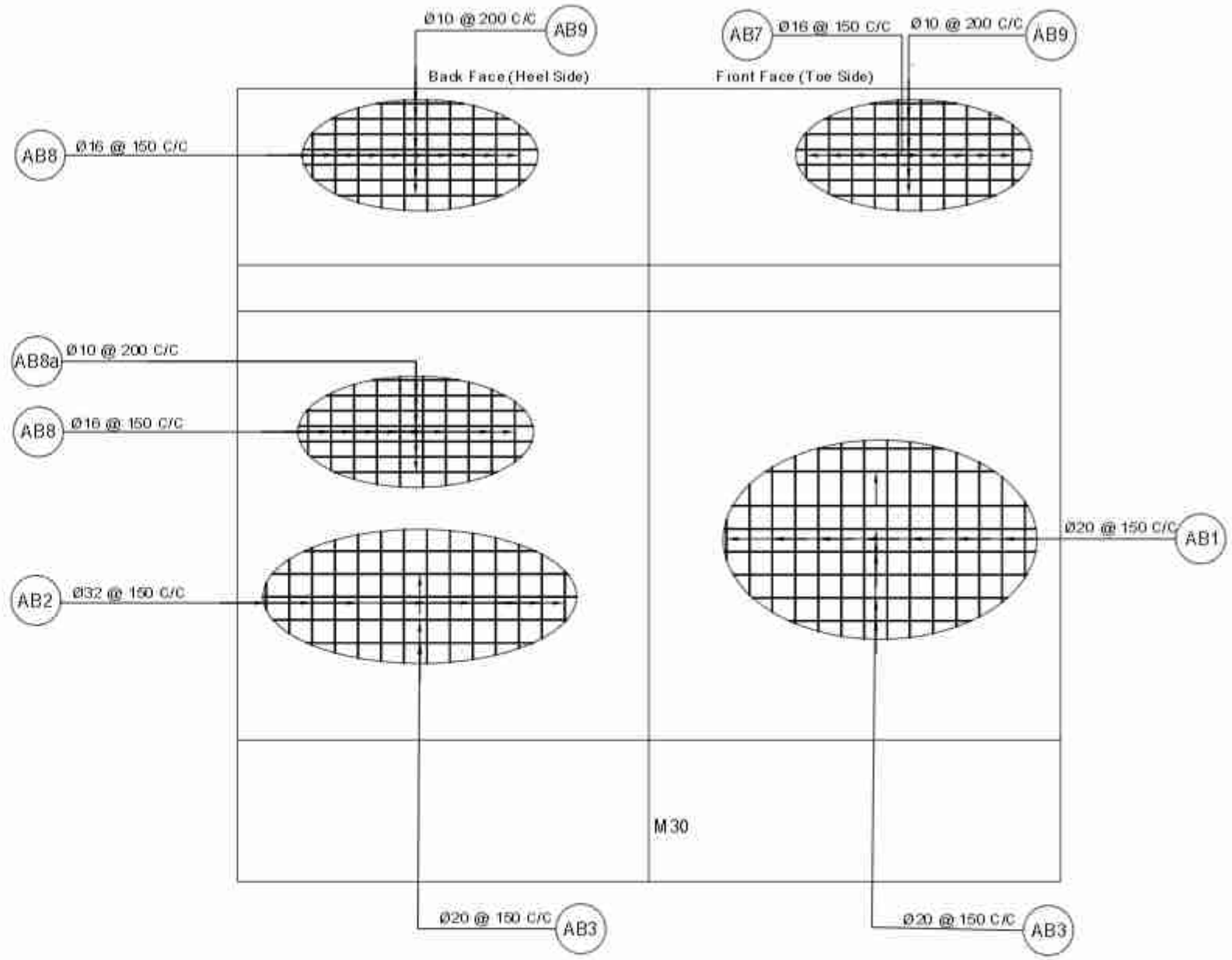

Reinforcement Details of Abutment
Scale:- 1:75

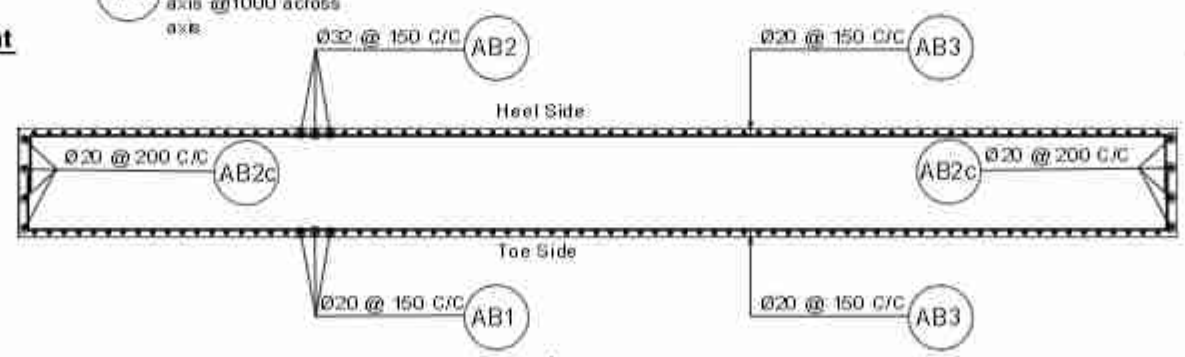

Section at A-A
Scale:- 1:75

Government of Nepal Ministry of Physical Infrastructure and Transport **Department of Roads** **Project Directorate Office (ADB)** **SASEC Highway Improvement Project-** Project Preparatory Consultant (SHIP-PPC) ADB Loan No: 3722-NEP	**CONSULTANT:** Soosung Engineering Co. Ltd, Korea in association with ERMCP (Ltd) and Tech Studio of Engineeering Nepal	**IMPLEMENTING AGENCY:** **DOR, DCID** **ROAD NAME:** **East West Highway (H01)** **Butwal - Gorusinghe Section**	**SHEET TITLE:** Reinforcement Details of Abutment of **Bamaha Bridge** (46/H001/296_A)	**SCALE:** As Shown		NAME	SIGNATURE	REV NO.	DESCRIPTION	DATE: November , 2022
					Designed by:	Saroj Bhattarai				DWG.NO.: 296_Bamaha
					Checked by:	P. Upadhyaya				
					Approved by:	Dr. T.H.Choi				SHEET NO.: 15/25

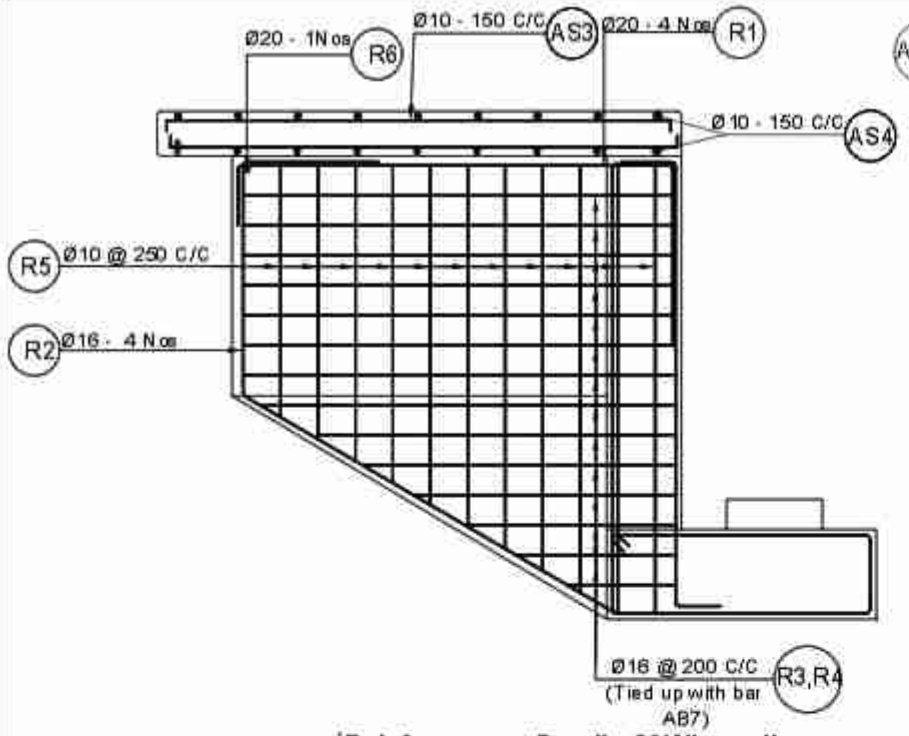

Reinforcement Details Of Wingwall
Scale:-1:50

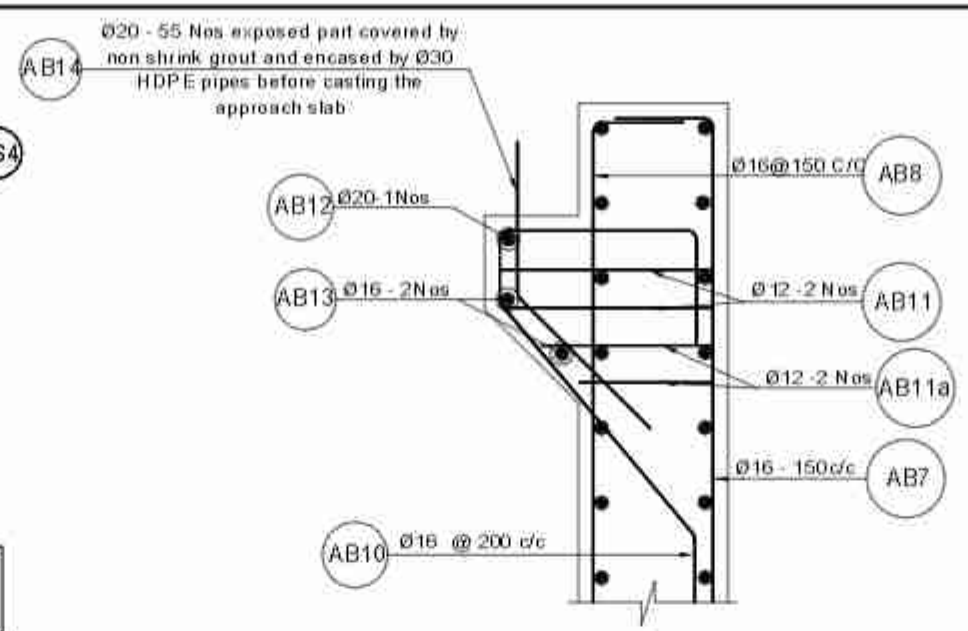

Detail at -A
Scale:-1:20

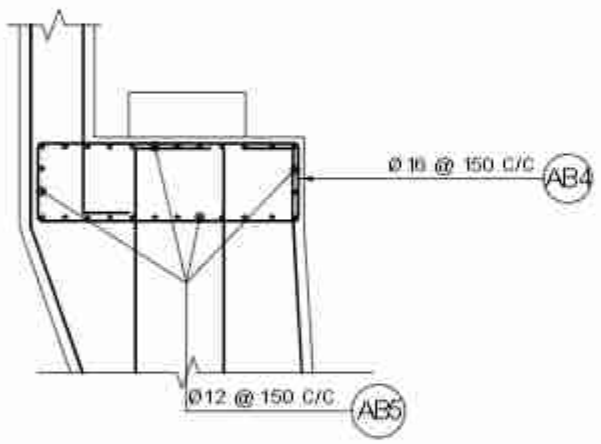

Reinforcement Details Of Abutment
Scale:-1:50

BAR BENDING SCHEDULE FOR WINGWALL

BAR ID	SHAPE OF BAR (mm) (NOT TO SCALE)	SPACING (mm)	Ø OF BARS (mm)	NO. OF BARS	LENGTH (m)	WEIGHT/LENGTH (kg/m)	TOTAL WEIGHT (kg)
R1	400 3407 1200	0	20	8	5.007	2.466	98.784
R2	300 1157 2335	0	16	8	4.992	1.578	63.033
R3	3314 214 2*150	150	16	16	7.356	1.578	185.764
R4	avg.1600 214 2*150	150	16	16	3.928	1.578	99.196
R5	182 avg.2175	250	10	26	5.010	0.617	80.310
R6	307	0	20	2	0.307	2.466	1.514
R7	3400	0	10	4	3.400	0.617	8.385
R8	350 260	0	10	16	1.320	0.617	14.649
TOTAL IN 2 WINGWALL IN ONE ABUTMENT							551.635
TOTAL WEIGHT (IN METRIC TON)							0.552

BAR BENDING SCHEDULE OF ABUTMENT

BAR ID	SHAPE OF BAR (mm) (NOT TO SCALE)	SPACING (mm)	Ø OF BARS (mm)	NO. OF BARS	LENGTH (m)	WEIGHT/LENGTH (kg/m)	TOTAL WEIGHT (kg)
AB1	7780 200	150 mm c/c Approx	20	110	8.580	2.466	2327.558
AB1a	0 0	-	-	-	-	-	-
AB2	7780 500	150 mm c/c Approx	32	110	8.780	6.313	6097.442
AB2b	7780 500	At side face 200 mm c/c	20	14	8.380	2.466	285.877
AB3	avg.900 10235	150 mm c/c Approx	20	78	34.280	2.466	6594.107
AB4	avg.1635 515 2*100	150 mm c/c Approx	16	111	4.590	1.578	788.381
AB5	10300	150 mm c/c Approx	12	29	16.300	0.888	419.671
AB6	1235-1135 Hook length 100; 900 mm C/C horizontal; 400 mm C/C vertical up to 1.83m from stem bottom 600 mm C/C vertical at remaining 3.52 m		16	229	1.630	1.578	590.231
AB7	350 2900 300	150 mm c/c Approx	16	110	3.550	1.578	616.342
AB8	350 2435 100	150 mm c/c Approx	16	110	5.537	1.578	961.319
AB8a	16300	200 mm c/c Approx	10	12	16.300	0.617	120.595
AB9	16250 338	200 mm c/c Approx	10	13	33.250	0.617	266.499
AB10	600 100 200	200 mm c/c Approx	16	79	1.947	1.578	242.769
AB11	600 200		12	158	1.000	0.888	140.275
AB11a	300 200		12	158	0.700	0.888	98.192
AB12	16300		20	1	16.300	2.466	40.198
AB13	16300		16	2	16.300	1.578	51.454
AB14	300 320		20	55	0.600	2.466	122.075
TOTAL WEIGHT ABUTMENT KG							19762.985
TOTAL WEIGHT (IN METRIC TON)							19.763

Government of Nepal Ministry of Physical Infrastructure and Transport **Department of Roads** **Project Directorate Office (ADB)** **SASEC Highway Improvement Project-** Project Preparatory Consultant (SHIP-PPC) ADB Loan No: 3722-NEP	**CONSULTANT:** Soosung Engineering Co. Ltd, Korea in association with ERMC P (Ltd) and Tech Studio of Engineering Nepal	**IMPLEMENTING AGENCY:** **DOR, DCID** **ROAD NAME:** **East West Highway (H01)** **Butwal - Gorusinghe Section**	**SHEET TITLE:** BBS & Reinforcement Details of **Bamaha Bridge** (46/H001/296_A)	**SCALE** As Shown		NAME	SIGNATURE	REV NO.	DESCRIPTION	DATE: November, 2022 DWG.NO.: 296_Bamaha SHEET NO.: 18/25
					Designed by:	Saroj Bhattarai				
					Checked by:	P. Upadhyaya				
					Approved by:	Dr. T.H. Choi				

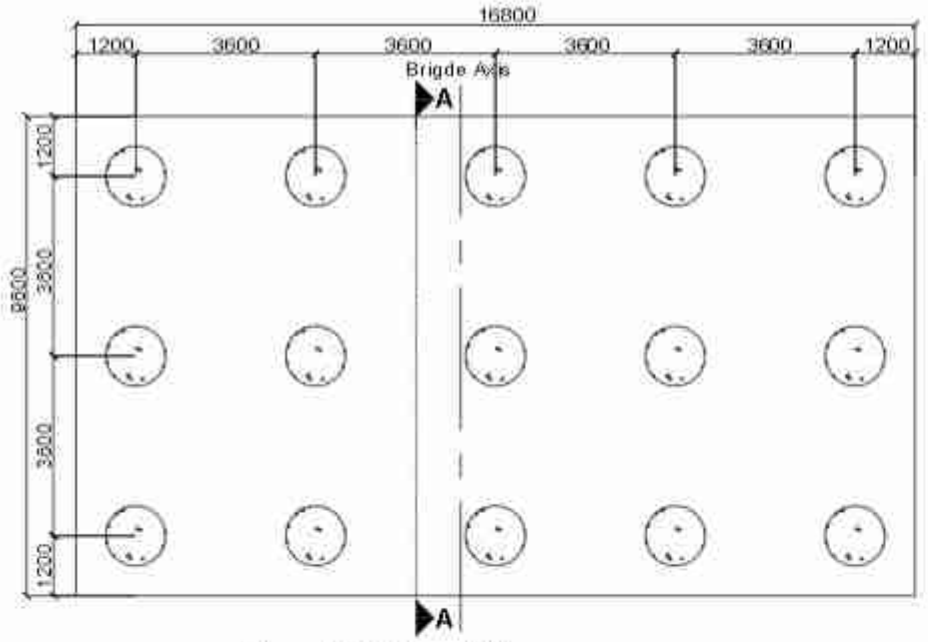

Plan of Abutment Piles
Scale:-1:150

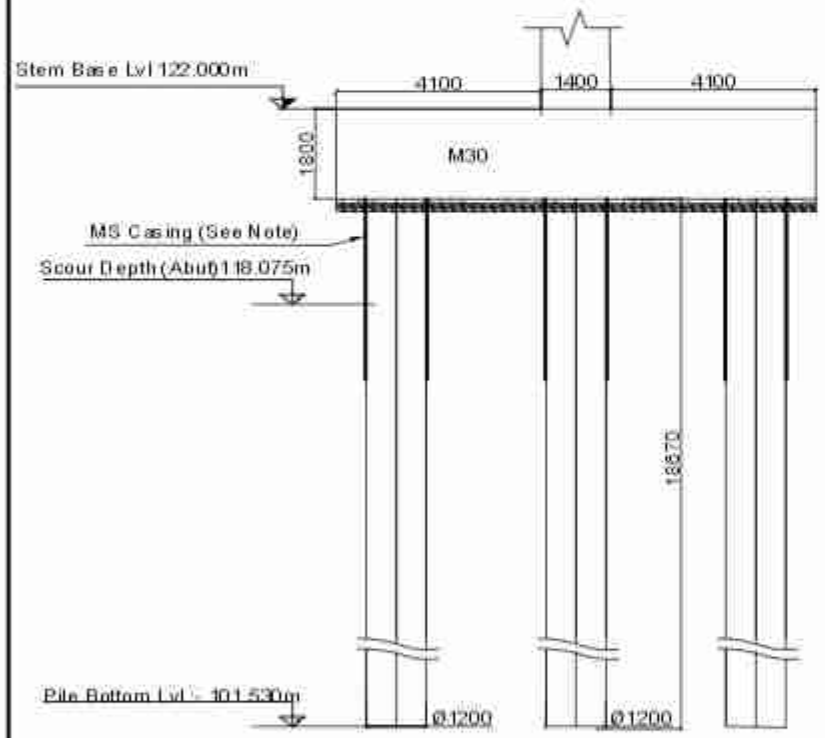

Piles Section At A-A
Scale:-1:150

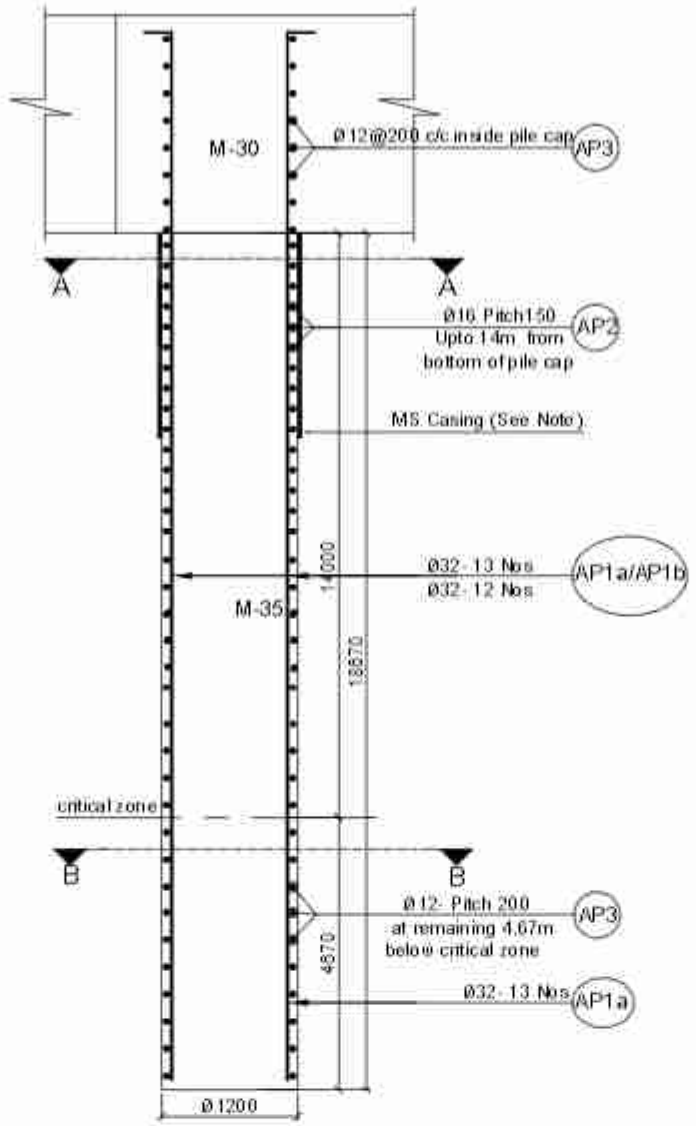

Reinforcement Details of Pile
Scale: 1:50

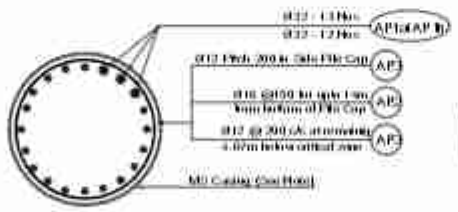

Section at A-A
Scale:- 1:50

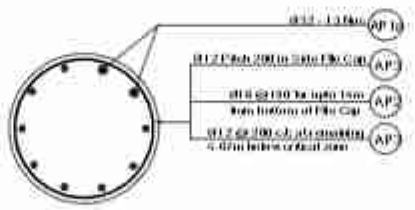

Section at B-B
Scale:- 1:50

BAR BENDING SCHEDULE FOR ABUTMENT PILES

BAR ID	SHAPE OF BAR IN mm (NOT TO SCALE)	SPACING (mm)	Ø OF BARS (mm)	NO OF BARS	LENGTH (m)	WEIGHT/LENGTH (Kg/m)	TOTAL WEIGHT (Kg)
AP1a	200, 20405, single Bars		32	13	20.460	6.313	1679.227
AP1b	200, 15700, Curtailed bars		32	12	15.900	6.313	1204.589
AP2	Dia-1034,Pitch-150 14m From Bottom of pile cap	150	16	1	306.360	1.578	483.540
AP3	Dia-1034,Pitch 200 inside pile cap 200 Below Critical Zone	200	12	1	105.380	0.888	93.558
TOTAL IN ONE PILE							3460.915
TOTAL (IN METRIC TON)							3.461
TOTAL IN 15 PILES OF ONE ABUTMENT (IN METRIC TON)							51.914

BAR BENDING SCHEDULE FOR ABUTMENT PILECAP

BAR ID	SHAPE OF BAR IN mm (NOT TO SCALE)	SPACING (mm)	Ø OF BARS (mm)	NO OF BARS	LENGTH (m)	WEIGHT/LENGTH (Kg/m)	TOTAL WEIGHT (Kg)
APC1	9425, 1080	150	25	85	11.585	3.853	3794.509
APC2	9425, 1080	150	25	85	11.585	3.853	3794.509
APC3	16630, 1080	150	20	49	18.790	2.466	2270.614
APC4	16630, 1080	150	20	49	18.790	2.466	2270.614
APC5	1570; Curve length = 251, Curve radius = 40, Hook length = 80	0	16	473	2.232	1.578	1666.310
		400 C/C along/1000 Across Axis					
APC6	9450, 16650	300	16	5	52.200	1.578	411.947
TOTAL IN PILE OF ONE ABUTMENT							14208.503
TOTAL WEIGHT (IN METRIC TON)							14.209

Location	Design Pile Length m	Design Working load on pile (non - seismic casse) kn	Allowable Bearing Capacity on pile (Scour case) kn	Allowable Bearing Capacity of the Pile (Non Scour case) kn
Abutment	18.67	2199	2612	3399
Pier	0	0	0	0

Note On MS permanent casing on piles: In case piling works are done without temporary casing, the piles shall be lined with 6mm thick MS steel permanent casing up to 1.5 m or 0.5m below MSL whichever is larger (Subject to instruction and approval by the Engineer)

For Construction Methology and Sequence Please See General Notes.

Government of Nepal Ministry of Physical Infrastructure and Transport **Department of Roads** **Project Directorate Office (ADB)** **SASEC Highway Improvement Project-** Project Preparatory Consultant (SHIP-PPC) ADB Loan No: 3722-NEP	**CONSULTANT:** Soosung Engineering Co. Ltd, Korea in association with ERMC P (Ltd) and Tech Studio of Engineeering Nepal	**IMPLEMENTING AGENCY:** **DOR, DCID** **ROAD NAME:** **East West Highway (H01)** **Butwal - Gorusinghe Section**	**SHEET TITLE:** Reinforcement Details of Abutment Piles of **Bamaha Bridge** (46/H001/296_A)	**SCALE:** As Shown		**NAME**	**SIGNATURE**	**REV NO.**	**DESCRIPTION**	**DATE:** November , 2022
					Designed by:	Saroj Bhattarai				
					Checked by:	P. Upadhyaya				**DWG.NO.:** 290_Bamaha
					Approved by:	Dr. T.H.Choi				**SHEET NO.:** 17/25

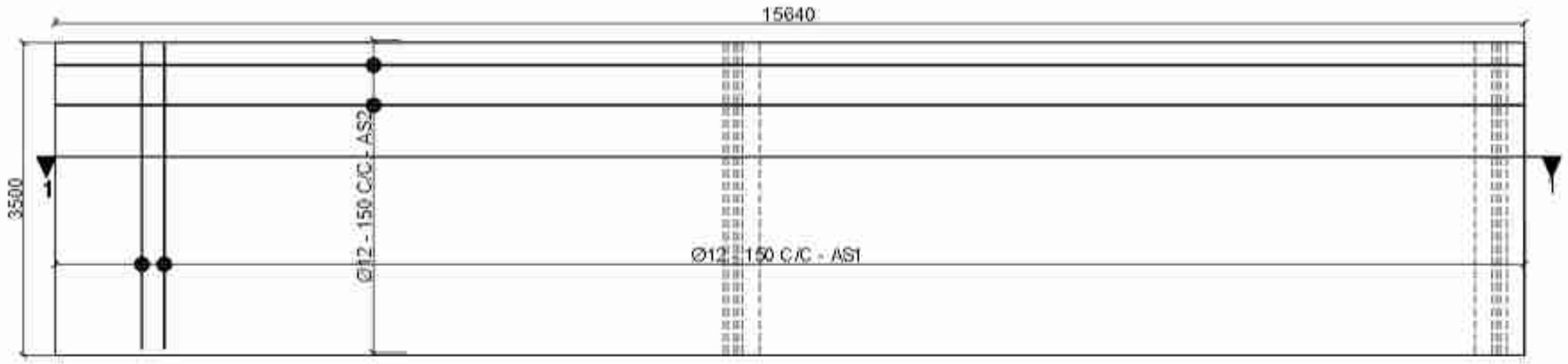

Plan of Reinforcement Details of Approach Slab
Scale:-1:75

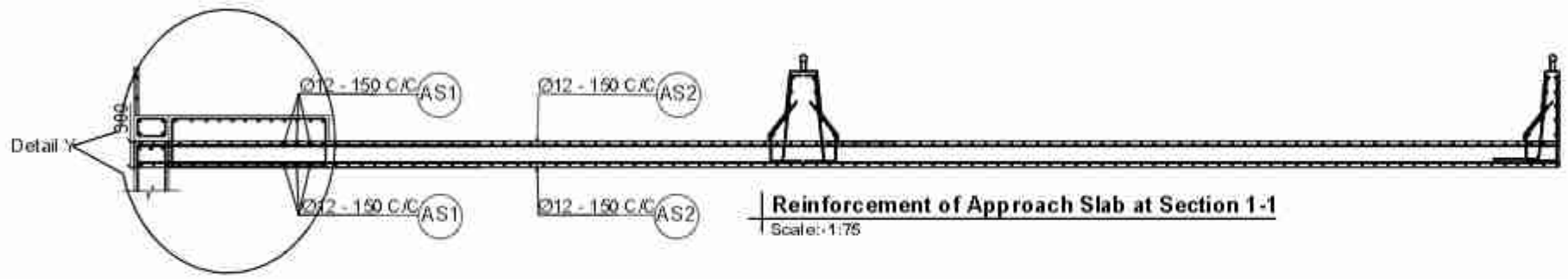

Reinforcement of Approach Slab at Section 1-1
Scale:-1:75

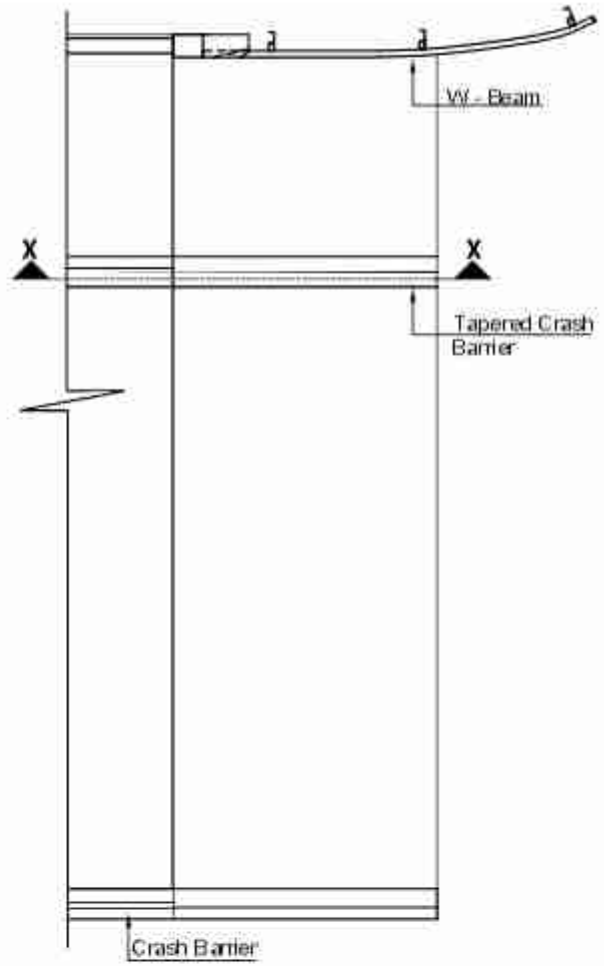

Plan of Approach Slab
Not to Scale

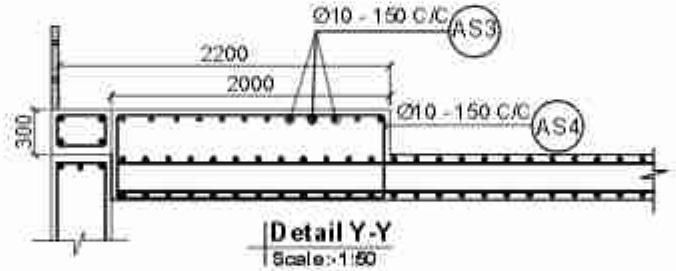

Detail Y-Y
Scale:-1:50

BAR BENDING SCHEDULE OF APPROACH SLAB							
BAR NO	SHAPE OF BAR IN mm (NOT TO SCALE)	SPACING (mm)	Ø OF BARS (mm)	NO. OF BARS	LENGTH (m)	WEIGHT PER LENGTH (kg/m)	TOTAL WEIGHT (Kg)
AS1	3400	-	12	210	3.400	0.888	633.901
AS2	15550	-	12	48	15.550	0.888	662.666
AS3	3400		10	15	3.400	0.617	31.443
AS4	1920 / 620		10	18	5.000	0.617	55.489
TOTAL IN ONE APPROACH SLAB							1296.567
TOTAL WEIGHT IN METRIC TON							1.297

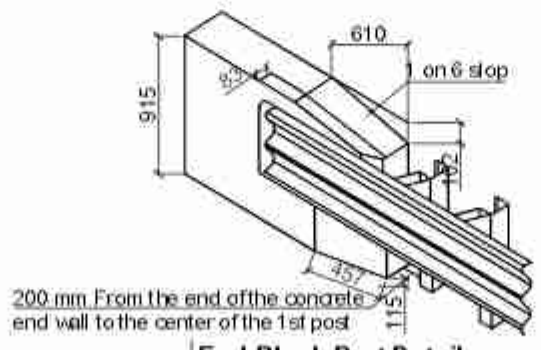

End Block Part Details
Scale:-1:50

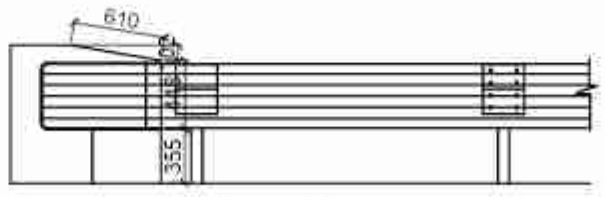

Eleavation
Scale:-1:50

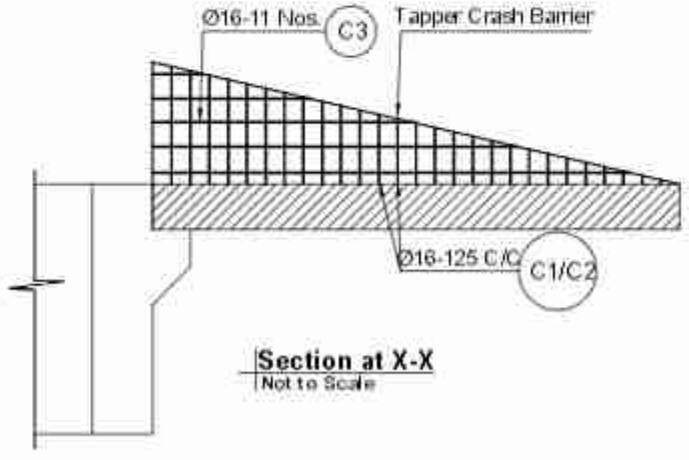

Section at X-X
Not to Scale

Government of Nepal Ministry of Physical Infrastructure and Transport **Department of Roads** **Project Directorate Office (ADB)** **SASEC Highway Improvement Project-** **Project Preparatory Consultant (SHIP-PPC)** **ADB Loan No: 3722-NEP**	**CONSULTANT:** Soosung Engineering Co. Ltd, Korea in association with ERMC P (Ltd) and ETS-Tech Studio of Engineeering Nepal	**IMPLEMENTING AGENCY:** **DOR, DCID** **ROAD NAME:** **East/West Highway (H01)** **Butwal - Gorusinghe Section**	**SHEET TITLE:** Reinforcement Details of Approach Slab of **Bamaha Bridge** (46/H001/296_A)	**SCALE:** As Shown		NAME	SIGNATURE	REV NO.	DESCRIPTION	DATE: November , 2022 DWG.NO.: 296_Bamaha SHEET NO.: 18/25
					Designed by:	Saroj Bhattarai				
					Checked by:	P. Upadhyaya				
					Approved by:	Dr. T.H.Choi				

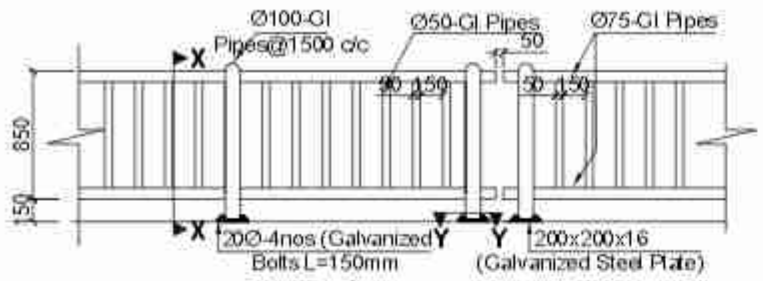

Railing Post Details
Scale:- 1:50

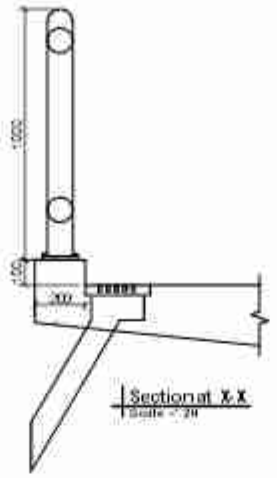

Section at X-X

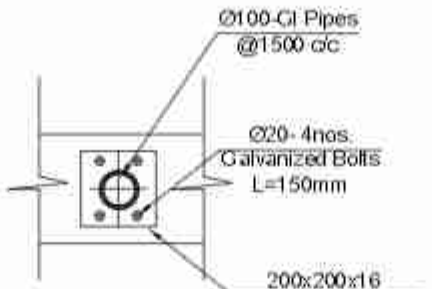

Section at Y-Y
Scale:- 1:20

BAR BENDING SCHEDULE OF CENTRAL CRASH BARRIER

BAR ID	SHAPE OF BAR IN mm (NOT TO SCALE)	SPACING (MM)	Ø OF BARS (mm)	NO. OF BARS	LENGTH (m)	WEIGHT/LENGTH (kG/m)	TOTAL WEIGHT (kG)
C1	575, 250, 555	125	16	8	2.210	1.578	27.905
C2	916, 730	125	16	16	1.580	1.578	39.900
C3	960		16	11	0.960	1.578	16.667
TOTAL FOR 1M							84.473
TOTAL FOR 1.0M IN MT							0.084

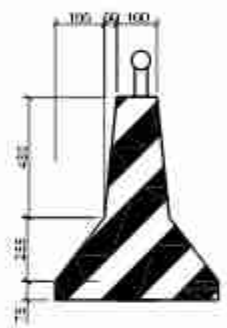

Painting Work on The Bridge Deck

Painting Work on Crash Barrier on The Surface Facing Towards Carriageway

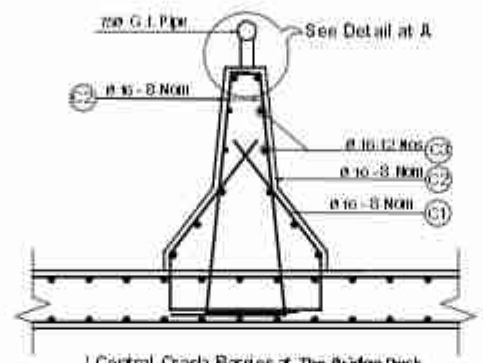

Central Crash Barrier at The Bridge Deck

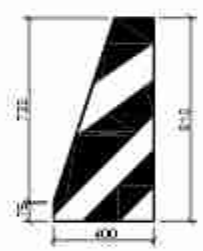

Painting Work on Tapper Crash Barrier

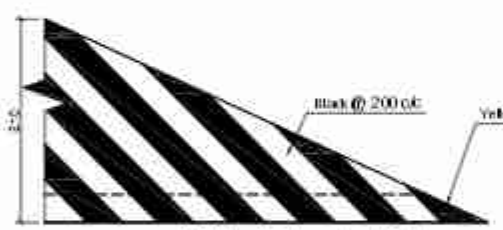

Painting Work on Crash Barrier on The Surface Facing Towards Carriageway

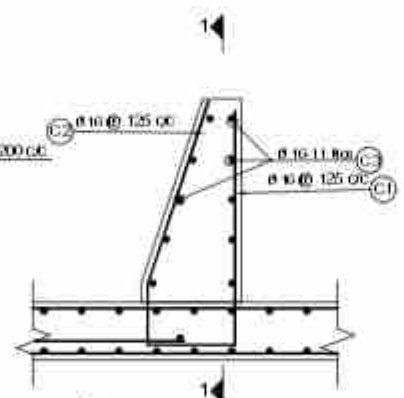

Crash Barrier Detail at The Tapered End

Painting Work on Crash Barrier

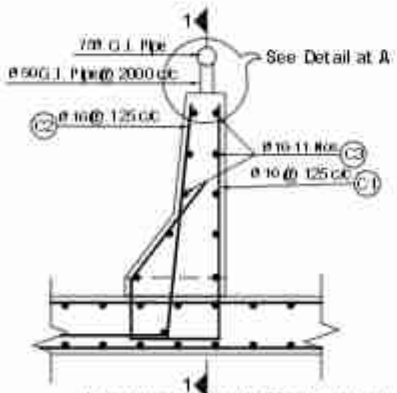

Crash Barrier Detail at The Bridge Deck

NOTES:
The crash barrier shall be sloped at both ends of the bridge as shown and the reinforcement shall be adjusted according to the slope.

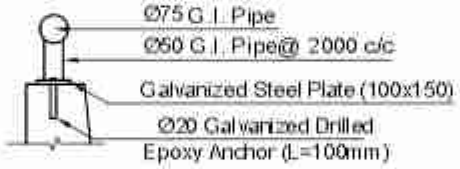

Details at- A-A
Scale:- 1:20

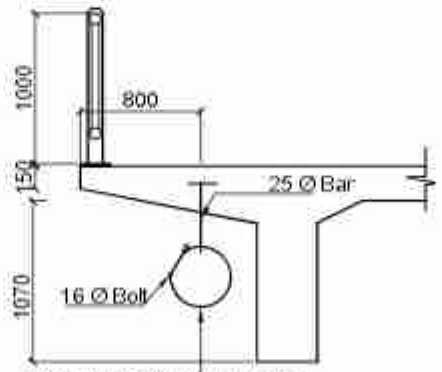

8mm Thick 50 mm Wide Strip (Diameter of Ring =400mm)
Maximum Load allowed 250 kg/m

Utility hanger Detail
Scale:- 1:50

BAR BENDING SCHEDULE OF CRASH BARRIER

BAR ID	SHAPE OF BAR IN mm (NOT TO SCALE)	SPACING (MM)	Ø OF BARS (mm)	NO. OF BARS	LENGTH (m)	WEIGHT/LENGTH (kG/m)	TOTAL WEIGHT (kG)
C1	575, 928, 225, 304	125	16	8	2.030	1.578	25.632
C2	915, 500	125	16	8	1.415	1.578	17.867
C3	960		16	11	0.960	1.578	16.667
TOTAL FOR 1M							60.166
TOTAL FOR 1.0M IN MT							0.006

Government of Nepal Ministry of Physical Infrastructure and Transport **Department of Roads** **Project Directorate Office (ADB)** **SASEC Highway Improvement Project-** **Project Preparatory Consultant (SHIP-PPC)** **ADB Loan No: 3722-NEP**	**CONSULTANT:** Soosung Engineering Co. Ltd, Korea in association with ERMC P (Ltd) and Tech Studio of Engineering Nepal	**IMPLEMENTING AGENCY:** **DOR, DCID** **ROAD NAME:** **East West Highway (H01)** **Butwal - Gorusinghe Section**	**SHEET TITLE:** Miscellaneous Details -1 of **Bamaha Bridge** (46H-H001/296_A)	**SCALE:** As Shown		**NAME**	**SIGNATURE**	**REV NO.**	**DESCRIPTION**	**DATE:** November , 2022 **DWG.NO.:** 296_Bamaha **SHEET NO.:** 19/25
					Designed by:	Saroj Bhattarai				
					Checked by:	P. Upadhyaya				
					Approved by:	Dr. T.H.Choi				

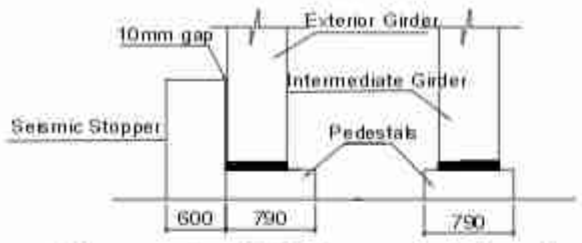

Abutment Cap With Stopper & Pedestal
Scale:- 1:50

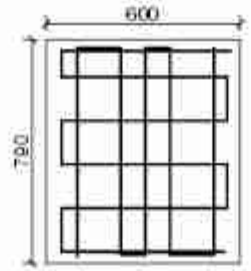

Pedestal Plan
Scale:- 1:20

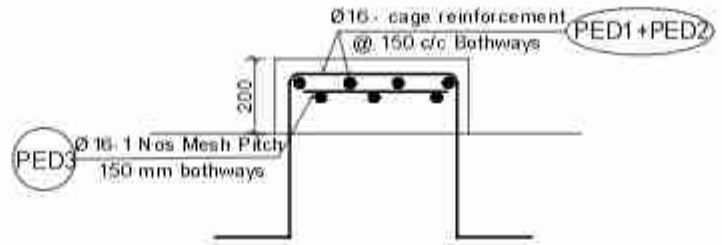

Pedestal Section
Scale:- 1:20

Note
On Pedestal Thickness The thickness of the pedestal can be suitably adjusted as per engineer's instruction to retain the height of the ballast wall

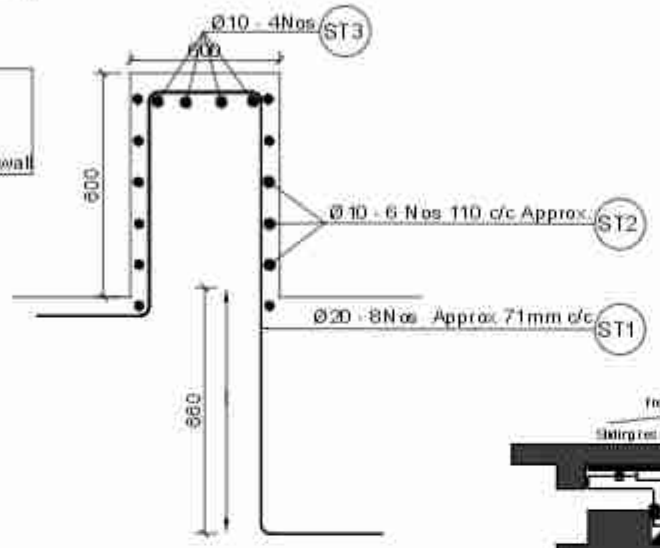

Stoppers Details
Scale:- 1:20

Fixed Pot Bearing As Per IRC : 83 (Part- III) - 2018 Section 2.1.1

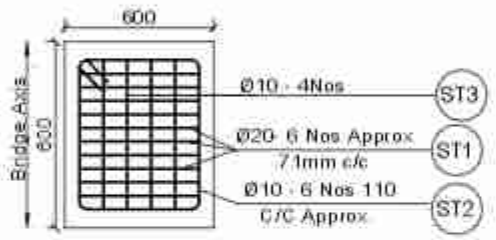

Stoppers Plan
Scale:- 1:20

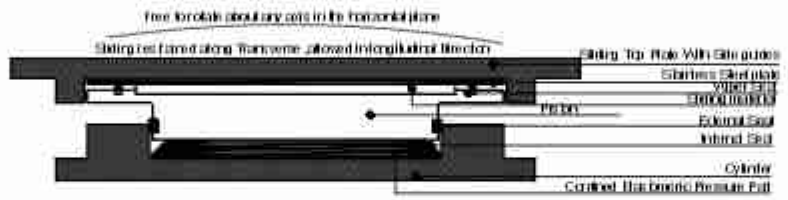

Guided Pot Bearing(For free Bearing) Movement Allowed in to longitudinal Direction As Per IRC : 83 (Part - III) - 2018 Section 2.1.3

Design Data for bearings (per bearing)

Load Condiadtion	Items		Load / Displacement/ Moment	
			POT Fixed Bearing	POT_PTFE Free Bearing
Under DL only	V, kN	No EQ	946	946
		EQ	1069	1069
	HL, kN	No EQ	49	49
		EQ	568	57
	HT, kN	No EQ	0	0
		EQ	255	255
	θ, rad	No EQ	0.0000	0.0000
		EQ	0.0000	0.0000
	Δ, mm		N/A	66
Under Maximum Live Load	V, kN	No EQ	1520	1520
		EQ	1725	1725
	HL, kN	No EQ	164	76
		EQ	714	86
	HT, kN	No EQ	0	0
		EQ	380	380
	θ, rad	No EQ	0.0003	0.0003
		EQ	0.0003	0.0003
	Δ, mm		N/A	66

The Contractor Shall Provide and Supply POT - PTFE Bearings Accoding to Provided load and Deformation.

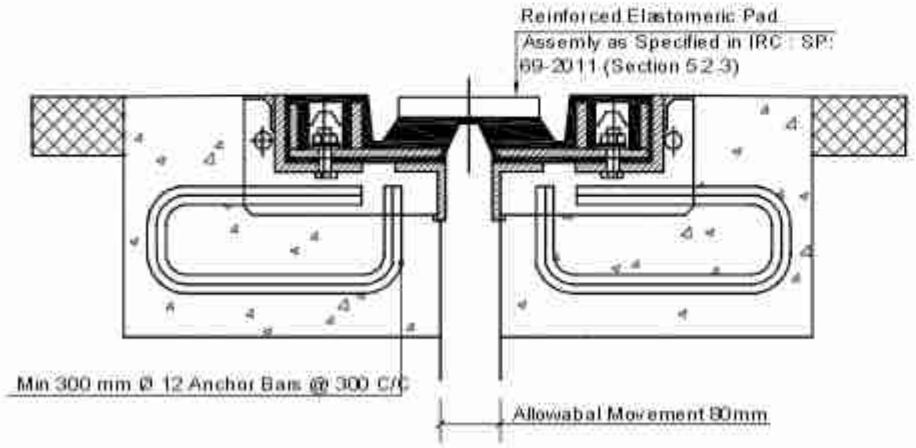

Reinforced Elastomeric Joint
Scale:- 1:10

BAR BENDING SCHEDULE OF PEDESTAL

BAR ID	SHAPE OF BAR IN mm (NOT TO SCALE)	SPACING (mm)	Ø OF BARS (mm)	NO. OF BARS	LENGTH (m)	WEIGHT/LENGTH (kg/m)	TOTAL WEIGHT (kg)
PED1	710; 200; 200	150	16	5	2.950	1.578	23.281
PED2	580; 200; 200	150	16	6	2.820	1.578	26.706
PED3	694; 564; Pitch 150 bothway, 1 layer	150	16	1	47.420	1.578	74.845
TOTAL BAR BENDING SCHEDULE OF PEDESTAL							124.831
TOTAL WEIGHT (IN METRIC TON)							0.125

BAR BENDING SCHEDULE OF STOPPER

BAR ID	SHAPE OF BAR IN mm (NOT TO SCALE)	SPACING (mm)	Ø OF BARS (mm)	NO. OF BARS	LENGTH (m)	WEIGHT/LENGTH (kg/m)	TOTAL WEIGHT (kg)
ST1	500; 600; 1500; 300; 300	71	20	8	3.200	2.466	63.134
ST2	520; 100; 500	110	10	6	2.240	0.617	8.286
ST3	500	0	10	4	0.500	0.617	1.233
TOTAL BAR BENDING SCHEDULE OF STOPPER							72.653
TOTAL WEIGHT (IN METRIC TON)							0.073

Legends:
EQ = Earthquake condition
V = Vertical load
HL = Horizontal force along the bridge axis
HT = Horizontal force transverse to bridge axis
θ = Rotation about transverse axis
Δ = Maximum longitudinal movement allowed

Notes:
Proposed Type of Bearing:- POT-PTFE bearings
1) The POT-Fixed bearings are fixed in position and free to rotate in all directions
2)The POT-PTFE Free bearings are free to rotate in all direction, Free to slide along the the bridge axis and Fixed in position in transverse direction
3) The coefficient of friction, μ for PTFE free bearings is taken as 0.05

Government of Nepal Ministry of Physical Infrastructure and Transport **Department of Roads** **Project Directorate Office (ADB)** **SASEC Highway Improvement Project-** Project Preparatory Consultant (SHIP-PPC) ADB Loan No: 3722-NEP	**CONSULTANT:** Soosung Engineering Co. Ltd, Korea in association with ERMC P (Ltd) and Tech Studio of Engineeering Nepal	**IMPLEMENTING AGENCY:** **DOR, DCID** **ROAD NAME:** **East West Highway (H01)** **Butwal - Gorusinghe Section**	**SHEET TITLE:** Miscellaneous Details - 2 of **Bamaha Bridge** (46/H001/296_A)	**SCALE:** As Shown		NAME	SIGNATURE	REV NO.	DESCRIPTION	DATE: November , 2022
					Designed by:	Saroj Bhattarai				DWG.NO.: 296_Bamaha
					Checked by:	P. Upadhyaya				
					Approved by:	Dr. T.H.Choi				SHEET NO.: 20/25

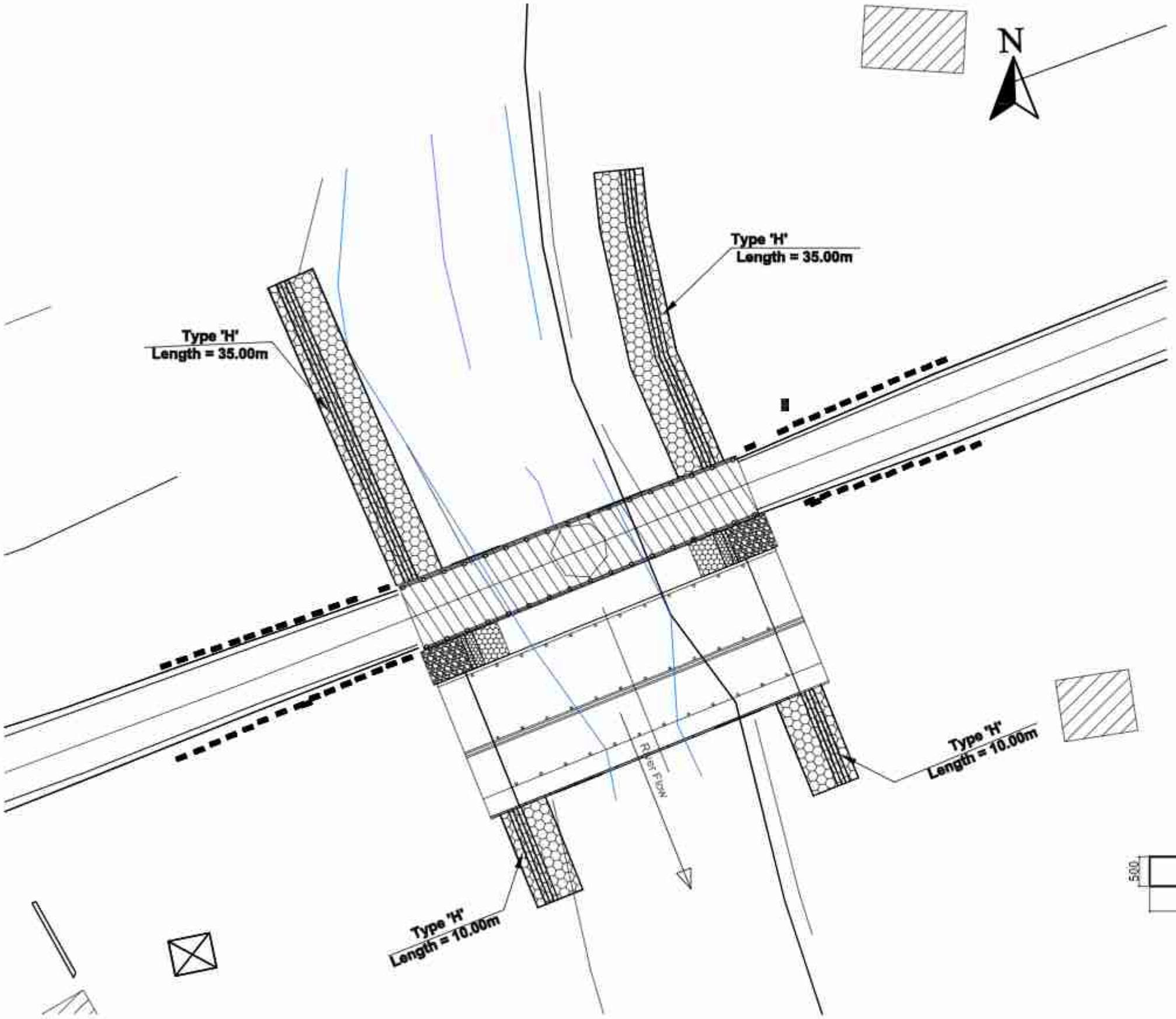

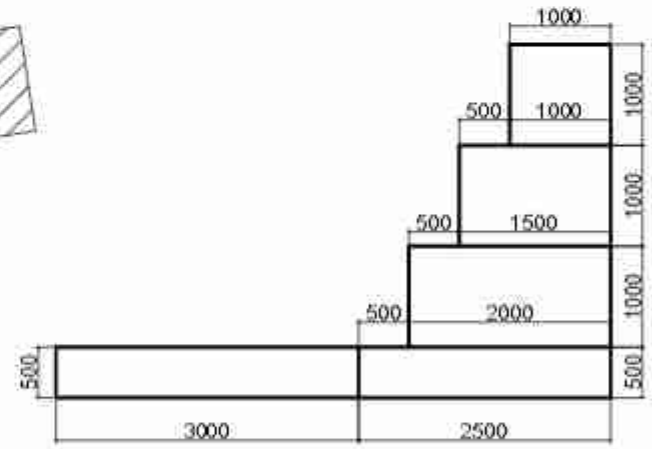

"H" Type River Training Structure
Scale:-1:75

Government of Nepal Ministry of Physical Infrastructure and Transport **Department of Roads** **Project Directorate Office (ADB)** **SASEC Highway Improvement Project-** **Project Preparatory Consultant (SHIP-PPC)** **ADB Loan No: 3722-NEP**	**CONSULTANT:** Soosung Engineering Co. Ltd, Korea in association with ERMC P (Ltd) and Tech Studio of Engineeering Nepal	**IMPLEMENTING AGENCY:** **DOR, DCID** **ROAD NAME:** **East West Highway (H01)** **Butwal - Gorusinghe Section**	**SHEET TITLE:** River Training Work of **Bamaha Bridge** (46/H001/296_A)	**SCALE:** As Shown		NAME	SIGNATURE	REV NO.	DESCRIPTION	DATE: November , 2022
					Designed by:	Saroj Bhattarai				DWG.NO.: 296_Bamaha
					Checked by:	P. Upadhyaya				
					Approved by:	Dr. T.H.Choi				SHEET NO.: 21/25

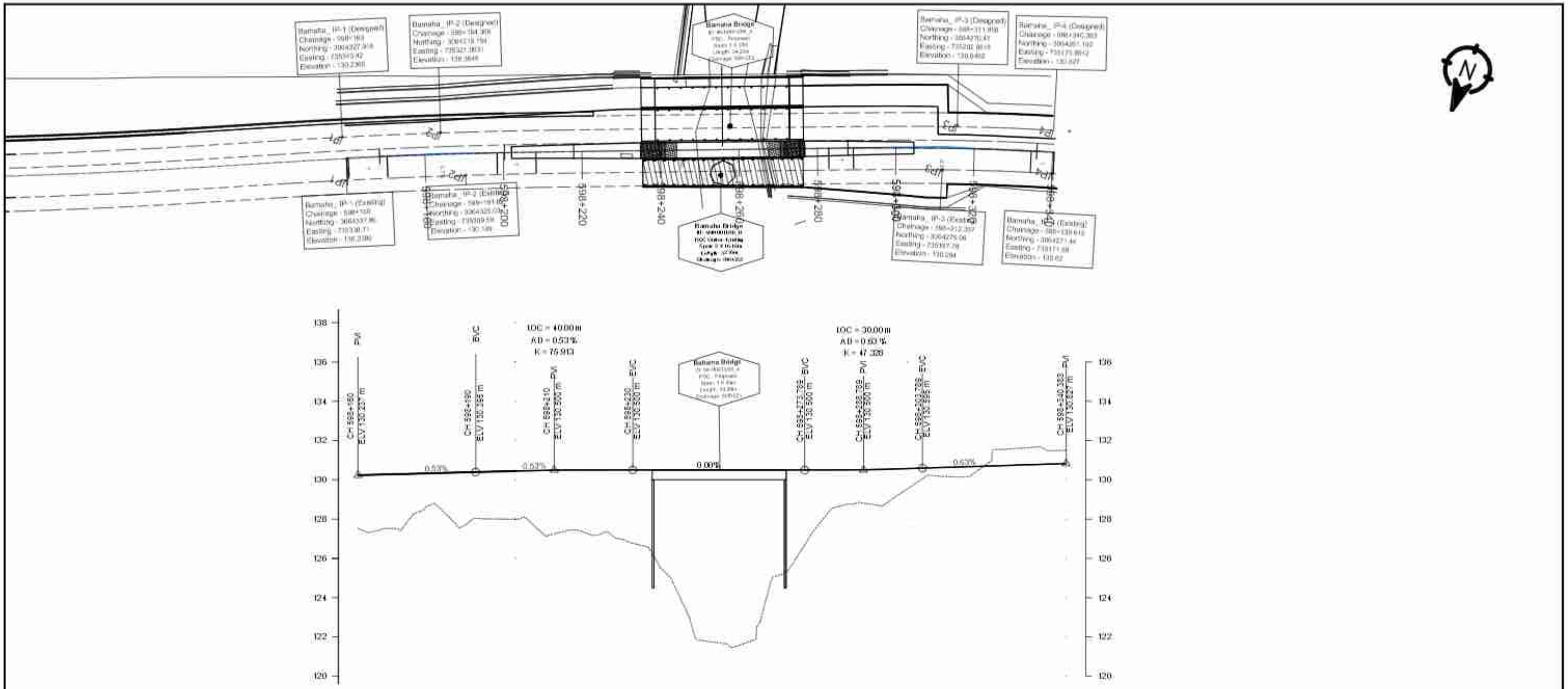

DESIGN LEVEL(m)	130.237	130.289	130.342	130.395	130.441	130.474	130.493	130.500	130.500	130.500	130.500	130.500	130.504	130.528	130.573	130.634	130.698	130.751	130.825
EXISTING LEVEL(m)	127.526	127.492	128.712	128.046	127.993	127.244	127.162	126.771	124.886	121.750	121.784	125.521	128.380	128.773	129.549	130.167	130.776	131.624	131.499
HORIZONTAL ALIGNMENT RIGHT	IP-1 R=0.00				IP-2 IP-2 R=1000.00 R=1000.00											IP-3 R=700.00			IP-4 R=0.00
HORIZONTAL ALIGNMENT LEFT																			
SUPER ELEVATION	NC	T	-2.7222222222222		T	T				NC				T		-2			T
	598+160	598+170.344			598+195.395 598+200	598+205.312							598+282.679	598+289.179				598+334.539	598+340.383
CHAINAGE(Km)	598+160	598+170	598+180	598+190	598+200	598+210	598+220	598+230	598+240	598+250	598+260	598+270	598+280	598+290	598+300	598+310	598+320	598+330	598+340

Government of Nepal Ministry of Physical Infrastructure and Transport **Department of Roads** **Project Directorate Office (ADB)** **SASEC Highway Improvement Project-** **Project Preparatory Consultant (SHIP-PPC)** **ADB Loan No: 3722-NEP**	**CONSULTANT:** Soosung Engineering Co. Ltd, Korea in association with ERMC P (Ltd), Nepal and TSE-Tech Studio of Engineeering	**IMPLEMENTING AGENCY:** **DOR, DCID** **ROAD NAME:** **East West Highway (H01)** **Butwal - Gorusinghe Section**	**SHEET TITLE:** Plan & Profile Of Bamaha Bridge 598+200 - 598+340.383	**SCALE:** 0 2 4 6m Vertical Scale 0 10 20 30m Horizontal Scale		**NAME**	**SIGNATURE**	**REV NO.**	**DESCRIPTION**
					DESIGNED BY:	S.B. Shrestha			
					CHECKED BY:	P. Upadhyaya			
					APPROVED BY:	Dr. T.H.Choi			

DATE: November,2022

DWG.NO.: 296_Bamaha

SHEET NO.: 22/25

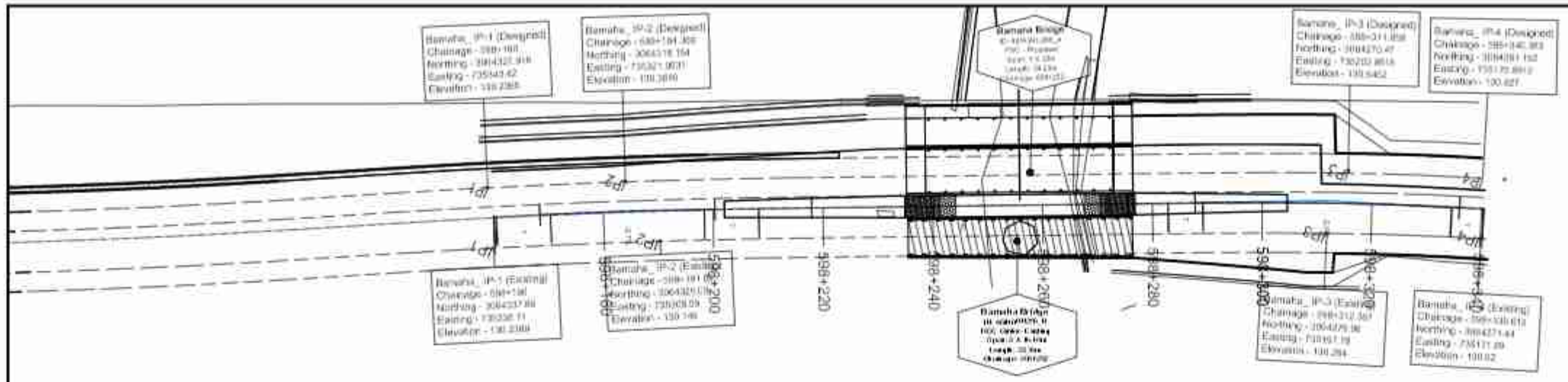

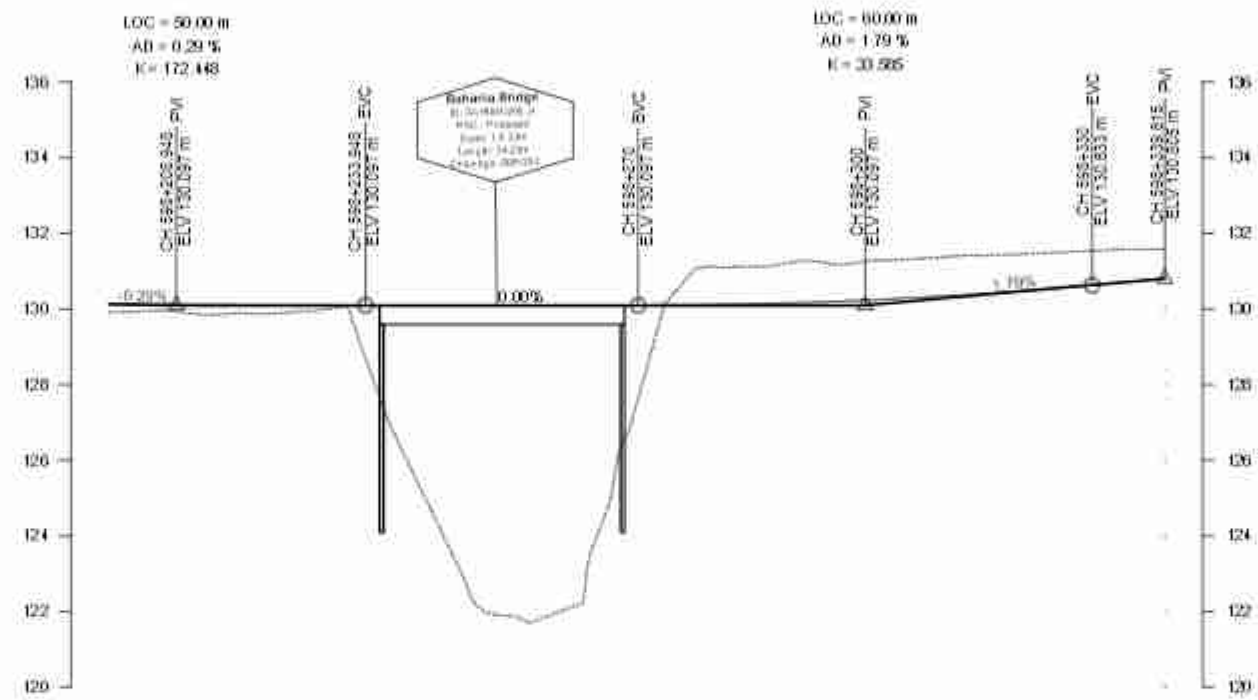

DESIGN LEVEL(m)	130.130	130.114	130.103	130.097	130.097	130.097	130.097	130.097	130.112	130.157	130.231	130.335	130.459	130.633	
EXISTING LEVEL(m)	129.904	129.982	129.874	130.030	125.750	121.983	122.027	127.648	131.121	131.222	131.253	131.372	131.447	131.534	
HORIZONTAL ALIGNMENT RIGHT	IP-2 R=1500.00											IP-3 R=600.00			IP-4 R=0.00
HORIZONTAL ALIGNMENT LEFT															
SUPER ELEVATION	-2.55	T				NC					T	-5.88		T	NC
	598+200	598+211.111	598+214.027							598+285.328	598+300.3		598+324.433		598+339.615
CHAINAGE(Km)	598+200	598+210	598+220	598+230	598+240	598+250	598+260	598+270	598+280	598+290	598+300	598+310	598+320	598+330	

Government of Nepal
Ministry of Physical Infrastructure and Transport
Department of Roads
Project Directorate Office (ADB)
SASEC Highway Improvement Project-
Project Preparatory Consultant (SHIP-PPC)
ADB Loan No: 3722-NEP

CONSULTANT:
Soosung Engineering Co. Ltd, Korea in association with
ERMC P (Ltd), Nepal
and
TSE-Tech Studio of Engineeering

IMPLEMENTING AGENCY:
DOR, DCID

ROAD NAME:
East West Highway (H01)

Butwal - Gorusinghe Section

SHEET TITLE:
Plan & Profile
Of
Existing Bamaha Bridge
598+200 - 598+339.615

SCALE:
0 2 4 6m Vertical Scale
0 10 20 30m Horizontal Scale

	NAME	SIGNATURE	REV NO.	DESCRIPTION
DESIGNED BY:	S.B. Shrestha			
CHECKED BY:	P. Upadhyaya			
APPROVED BY:	Dr. T.H.Choi			

DATE: November,2022
DWG.NO.: 296_Bamaha
SHEET NO.: 23/25

Ch:598+100
GL:129.808
DL:130.656

Ch:598+110
GL:129.694
DL:130.582

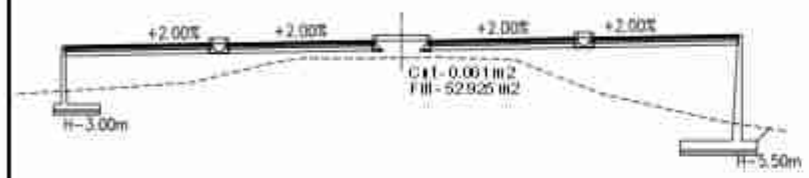

Ch:598+120
GL:129.584
DL:130.507

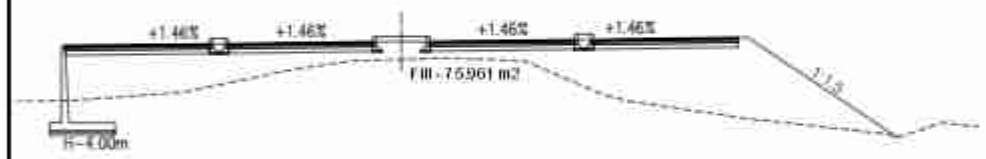

Ch:598+130
GL:129.450
DL:130.432

Ch:598+140
GL:129.460
DL:130.362

Ch:598+150
GL:129.467
DL:130.300

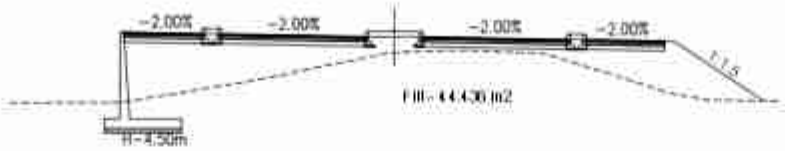

Ch:598+160
GL:129.439
DL:130.246
GL: 127.516
DL: 130.237

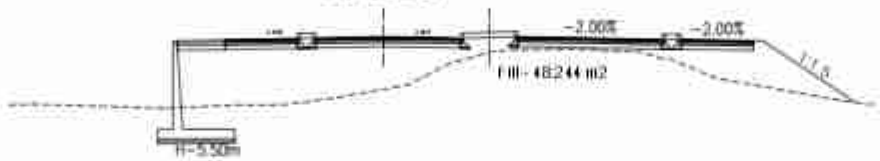

Ch:598+170
GL:129.082
DL:130.201
GL: 127.480
DL: 130.289
GL: 129.604
DL: 130.210

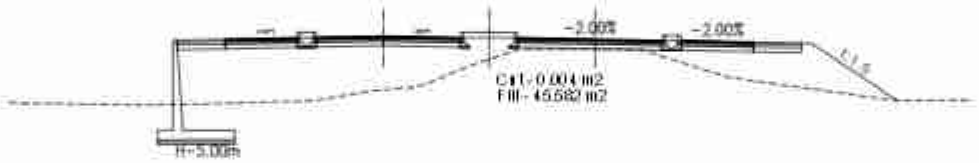

Ch:598+180
GL:129.547
DL:130.163
GL: 128.674
DL: 130.342
GL: 129.734
DL: 130.181

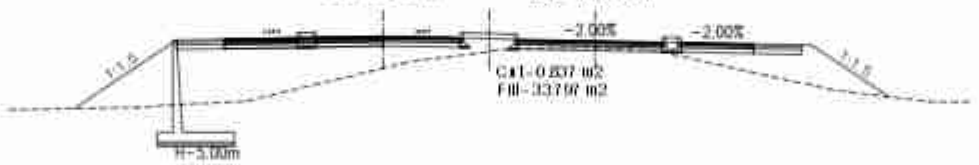

Ch:598+190
GL:129.668
DL:130.134
GL: 128.042
DL: 130.395
GL: 129.819
DL: 130.153

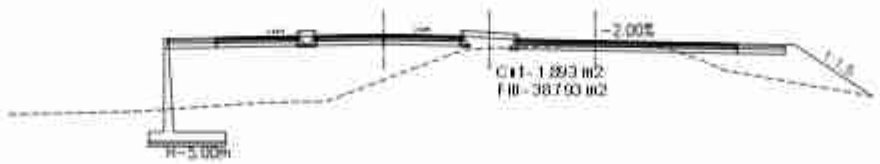

Ch:598+200
GL:129.525
DL:130.114
GL: 127.992
DL: 130.441
GL: 129.902
DL: 130.130

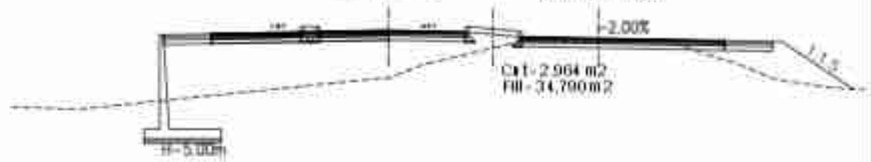

Ch:598+210
GL:129.600
DL:130.101
GL: 127.260
DL: 130.474
GL: 129.910
DL: 130.114

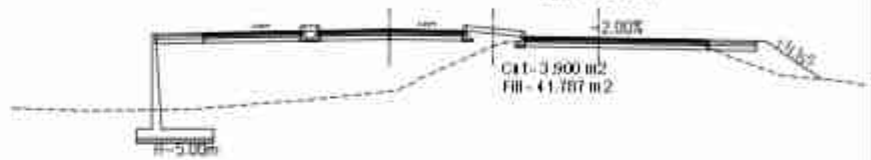

Ch:598+220
GL:129.451
DL:130.097
GL: 127.177
DL: 130.493
GL: 129.875
DL: 130.103

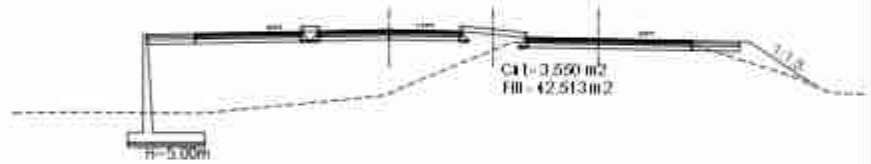

Ch:598+230
GL:129.679
DL:130.097
GL: 126.754
DL: 130.500
GL: 130.020
DL: 130.097

Ch:598+240
GL:125.360
DL:130.097
GL: 124.736
DL: 130.500
GL: 125.894
DL: 130.097

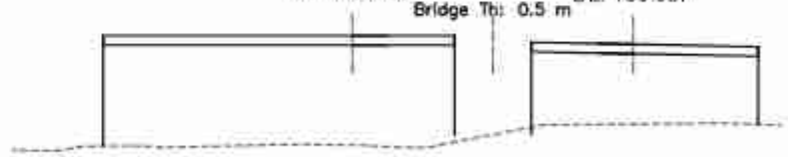

Government of Nepal Ministry of Physical Infrastructure and Transport **Department of Roads** **Project Directorate Office (ADB)** **SASEC Highway Improvement Project-** **Project Preparatory Consultant (SHIP-PPC)** **ADB Loan No: 3722-NEP**	**CONSULTANT:** Soosung Engineering Co. Ltd, Korea in association with ERMC P (Ltd), Nepal and TSE-Tech Studio of Engineeering	**IMPLEMENTING AGENCY:** **DOR, DCID** **ROAD NAME:** **East West Highway (H01)** **Butwal - Gorusinghe Section**	**SHEET TITLE:** Cross Section of Ch:598+100 - 598+240	**SCALE:** 0 2 4 6m Vertical Scale 0 10 20 30m Horizontal Scale		NAME	SIGNATURE	REV NO.	DESCRIPTION	DATE: November,2022
					DESIGNED BY:	S.B. Shrestha				DWG.NO.: 296_Bamaha
					CHECKED BY:	P. Upadhyaya				
					APPROVED BY:	Dr. T.H.Choi				SHEET NO.: 23a/29

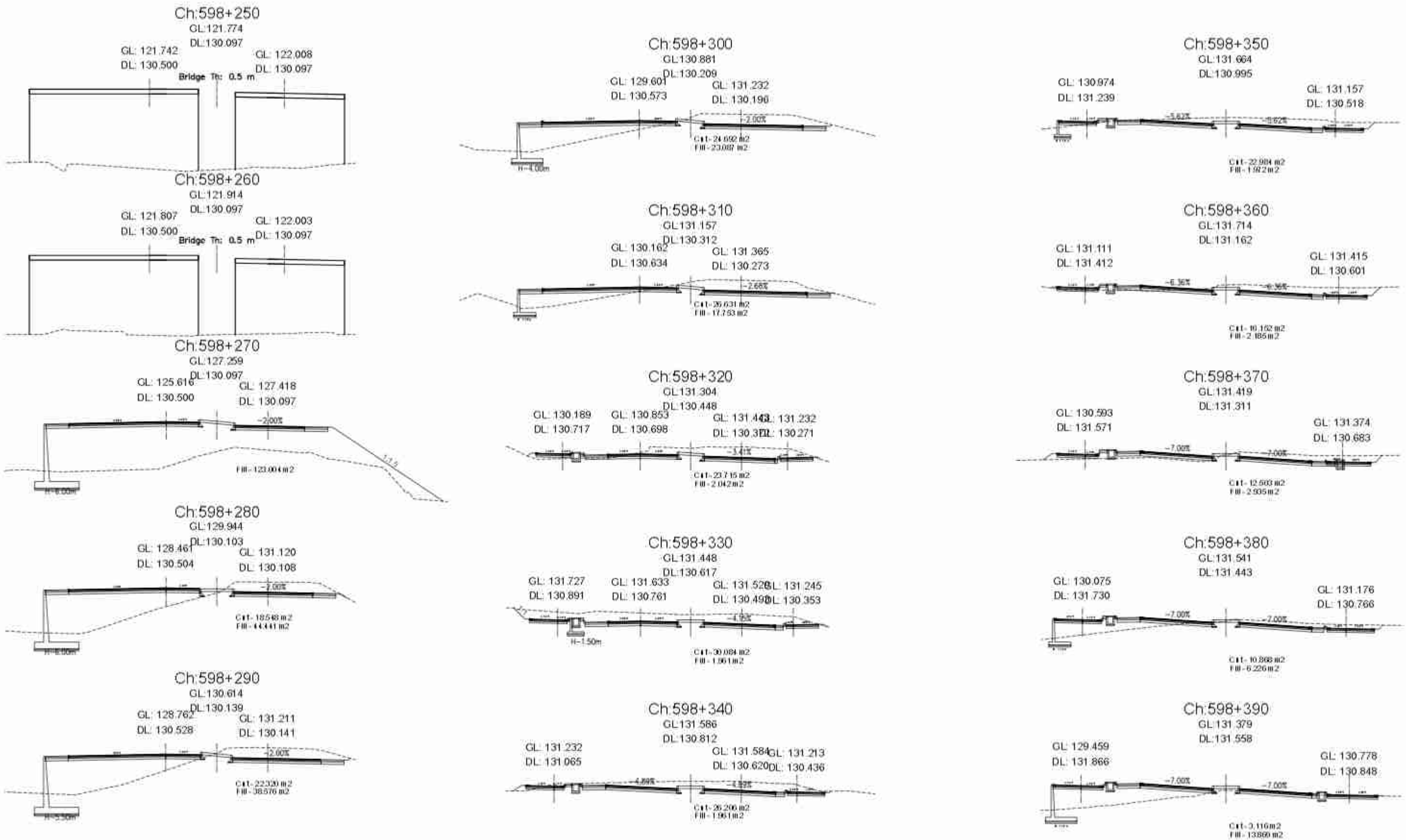

Government of Nepal Ministry of Physical Infrastructure and Transport **Department of Roads** **Project Directorate Office (ADB)** **SASEC Highway Improvement Project-** **Project Preparatory Consultant (SHIP-PPC)** **ADB Loan No: 3722-NEP**	**CONSULTANT:** Soosung Engineering Co. Ltd, Korea in association with ERMC P (Ltd), Nepal and TSE-Tech Studio of Engineeering	**IMPLEMENTING AGENCY:** **DOR, DCID** **ROAD NAME:** **East West Highway (H01)** **Butwal - Gorusinghe Section**	**SHEET TITLE:** Cross Section of Ch:598+250 - 598+390	**SCALE:** 0 2 4 6m Vertical Scale 0 10 20 30m Horizontal Scale		NAME	SIGNATURE	REV NO	DESCRIPTION	DATE: November,2022
					DESIGNED BY:	S.B. Shrestha				DWG.NO.: 296_Bamaha
					CHECKED BY:	P. Upadhyaya				
					APPROVED BY:	Dr. T.H.Choi				SHEET NO.: 23b/29

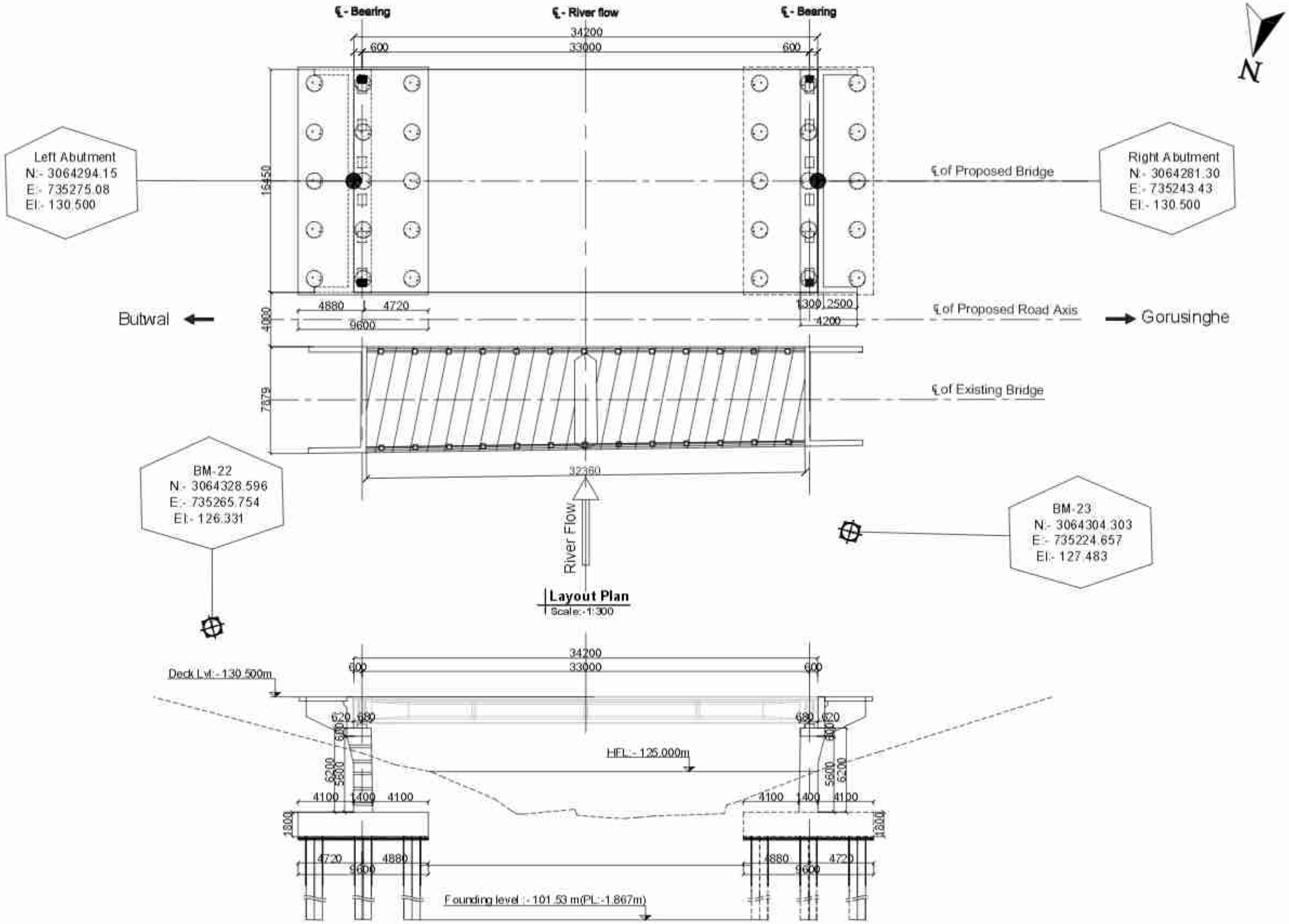

Government of Nepal Ministry of Physical Infrastructure and Transport **Department of Roads** **Project Directorate Office (ADB)** **SASEC Highway Improvement Project-** **Project Preparatory Consultant (SHIP-PPC)** **ADB Loan No: 3722-NEP**	**CONSULTANT:** Soosung Engineering Co. Ltd, Korea in association with ERMC P (Ltd) and Tech Studio of Engineeering Nepal	**IMPLEMENTING AGENCY:** **DOR, DCID** **ROAD NAME:** **East West Highway (H01)** **Butwal - Gorusinghe Section**	**SHEET TITLE:** Layout Plan of **Bamaha Bridge** (46/H001/296 A)	**SCALE:** As Shown		NAME	SIGNATURE	REV NO.	DESCRIPTION	DATE: November , 2022 DWG.NO.: 296_Bamaha SHEET NO.: 24/25
					Designed by:	Saroj Bhattarai				
					Checked by:	P. Upadhyaya				
					Approved by:	Dr. T.H.Choi				

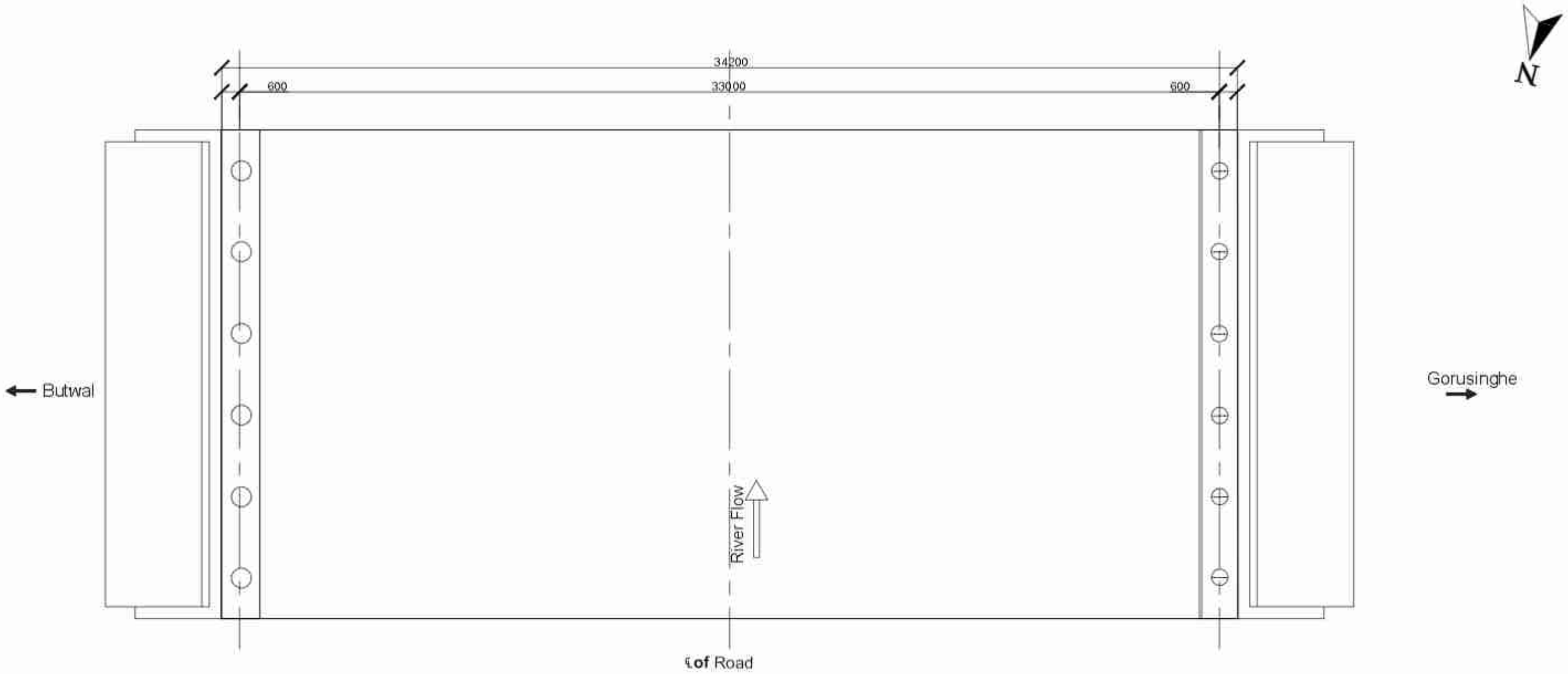

Layout of Bearing
Scale:-1:150

Legend

Elastomeric bearing.
Partial movement allowed in longitudinal direction.
Restrained to transverse movement.Free to rotate in any direction.

Fixed Pot-bearing.
Restrainde to lateral movement,Free to rotate in aney direction.

Free Pot-bearing.
Partial movement allowed in longitudinal direction.
Restrained to transverse movement.Free to rotate in any direction.

Government of Nepal Ministry of Physical Infrastructure and Transport **Department of Roads** **Project Directorate Office (ADB)** **SASEC Highway Improvement Project-** **Project Preparatory Consultant (SHIP-PPC)** **ADB Loan No: 3722-NEP**	**CONSULTANT:** Soosung Engineering Co. Ltd, Korea in association with ERMC P (Ltd) and Tech Studio of Engineeering Nepal	**IMPLEMENTING AGENCY:** **DOR, DCID** **ROAD NAME:** **East West Highway (H01)** **Butwal - Gorusinghe Section**	**SHEET TITLE:** Layout Plan of **Bamaha Bridge** (46/H001/296 A)	**SCALE:** As Shown		NAME	SIGNATURE	REV NO.	DESCRIPTION	DATE: November , 2022
					Designed by:	Saroj Bhattarai				DWG.NO.: 296_Bamaha
					Checked by:	P. Upadhyaya				
					Approved by:	Dr. T.H.Choi				SHEET NO.: 25/25

Government of Nepal

Ministry of Physical Infrastructure and Transport

Department of Roads

Project Directorate (ADB)

Implementing Agency : DOR, DCID

Project Preparatory Consultants

Under

SASEC Highway Improvement Project (SHIP-PPC)

(ADB Loan No: 3722 Nep)

Contract No. SHIP/PPC/2020/02

Ghamaha Bridge (46-H001-297_A)

St. Ch : 603+544.40 ~ End Ch : 603+587.60

Detailed Drawing

Butwal - Gorusinghe Sector

November,2022

CONTENTS

S.No.	DESCRIPTION	DWG. NO	NO. OF SHEETS
1.	General Notes.	1 - 2	2
2.	Topographic Map.	3	1
3.	General Arrangement.	4-5	2
4.	Bore Logs.	6	1
5.	Detail of Superstructure.	7	1
6.	Reinforcement Details of Slab.	8	1
7.	Prestressing Details of Main Girder .	9	1
8.	Anchorage Details.	10	1
9.	Untensioned Reinforcement Details of Girder.	11	1
10.	Bar Bending Schedule of Slab & Main Girder.	12	1
11.	Reinforcement Details of Intermediate Cross Girder.	13	1
12.	Reinforcement Details of End Cross Girder.	14	1
13.	Abutment Details.	15	1
14.	Reinforcement Details of Abutment .	16	1
15.	Reinforcement Details of Wingwall .	17	1
16.	Reinforcement Details of Abutment Pile .	18	1
17.	Reinforcement Details of approach Slab.	19	1
18.	Miscellaneous Details.	20-21	2
19.	River Training Work.	22	1
20.	Plan & Profile.	23-24	2
21.	Cross Sections.	24.1-24.3	3
22.	Layout Plan.	25-26	2

GENERAL NOTES

General

- Metric system of measurement is used in all drawings. Elevation and Stations are shown in Meter and all other dimensions are in Millimeters, except indicated otherwise.
- In case of contradictions, specific notes on respective sheet shall supersede the General Notes
- No dimensions shall be scaled from the drawings. Only written dimensions shall be followed. Any doubtful matter in the drawings shall be brought to the attention of the engineer-in-charge for any corrections before the execution of the works.

Design Notes

The design codes followed:
For RCC and PSC concrete - IRC:112-2020
For loads and stresses - IRC:6-20/24
For substructure and foundations - IRC:78-2014
For seismic design - IRC:SP:114-2018. Seismic zone V. Importance factor 1.2

Design live loads:

For urban area bridges
Case 1 - 3 lanes of class A + pedestrians; 1 lane of class A + 1 lane of class 70R + pedestrians
Case 2 - 4 lanes or class A; 2 lanes of class A + 1 lane of class 70R. No pedestrians
For non-urban area bridges
Case 1 - 2 lanes of class A + pedestrians; 1 lane of class 70R + pedestrians
Case 2 - 3 lanes of class A; 1 lane of class A + 1 lane of class 70R. No pedestrians.

Notes on Concrete

In General the grade of concrete to be used shall be as follows:
(unless otherwise specified in the respective drawing sheets)

For superstructure deck slab, wearing course, crash barriers:	M30
For raised footpaths:	M25
For main girders and cross girders of superstructure with PSC girders:	M45
For main girders and cross girders of superstructure with RCC girders:	M30
For substructure: Abutment stem, ballast wall, stoppers, bearing pedestals, pier cap, pier stem and pile caps:	M30
For bored and cast in situ piles:	M35
For leveling course:	M15

The maximum size of aggregate shall be as per IRC:112-2020, clause 18.4.4.2

Admixture to the concrete

To improve workability and/or increase initial setting time of concrete and cement grout, admixture conforming to IS:9103 and ASTM C-494, (Type F - High Range Water Reducing admixture) can be added in appropriate dosage, subject to their satisfactory proven use.

Clear Cover to reinforcement (unless otherwise specified in the respective drawing sheets)

Reinforcement bars of all components of the superstructure:	40mm
Prestressing ducts or strands in superstructure:	75mm
All components of abutment, pier, pile caps and piles (except stoppers and bearing pedestals):	75mm
Bearing pedestals and Stoppers:	50mm

Cover shall be ensured with the use of properly sized cement concrete blocks which can be secured to the re-bars or other devices approved by the engineer-in-charge. Use of loose stones or wooden pieces is not permitted.

Notes on Reinforcement

- All reinforcing steel bars shall be High Strength Deformed bars with grade Fe500 conforming to IS:/2486
- Laps and Splices shall conform to IRC:112-2020, Clause 15.2.5. Use of mechanical coupler is permitted upon approval by the engineer.

Notes on Prestressing

- Prestressing strands shall be Class-2, uncoated 7 ply, low relaxation type with ultimate tensile stress 1862 N/mm², conforming to IS:14268.
- The diameter of strands, their number in a tendon and the total jacking force to be applied is specified in the respective drawing sheet. All the initial and long term losses are already incorporated in design.
- Corrugated HDPE Sheathing ducts shall be used with the minimum internal diameter not less than three times the cross sectional area of the tendon. The wall thickness and other properties of the sheathing shall be as per IRC:112-2020, clause 13.4.3
- The specified profile and the alignment of the ducts shall be strictly maintained by properly securing the ducts to the re-bars. If required, pieces of re-bars can be added or the re-bars slightly repositioned or bent to maintain the profile and alignment, with approval of the engineer-in-charge.
- The jacking equipment shall be fitted with appropriate force measuring device and shall be regularly checked and calibrated as prescribed by the manufacturer.
- Jacking shall be done from both ends simultaneously and gradually, recording the elongation both sides. The expected final elongation mentioned in the respective drawings sheet is based on modulus of elasticity of the strands (Es) equal to 1.95x10^5 MPa. If the Es of supplied strands is different then the elongation values shall be recalculated by multiplying the Design values of elongation by the ratio of Design Es / Actual Es.
- In case the total elongation is not achieved at the prescribed jacking force, the jacking operation can be continued until the force reaches the maximum allowable value. If the required elongation is achieved at jacking force lower than the prescribed value, the jacking operation shall continue until the prescribed force is reached, provided the Sum of the additional elongations thus achieved is not more than 5% of the sum of the prescribed elongations.
- In adverse condition to any of the cases above, the jacking operation shall be stopped, the tendons removed and this matter reported to the engineer-in-charge for further instruction. The jacking force should NEVER exceed the Maximum allowable value.

Grouting

- The tendons which satisfy the above conditions shall be grouted properly, ensuring the duct is free of any foreign material and there is no leak or damage around the joints between the anchors and the ducts. Grouting can be normally done immediately after successful completion of tensioning operations and shall not be delayed by more than 5 days of tensioning of the cables.
- The grout shall be prepared with Ordinary Portland cement with suitable expansive admixture approved by the engineer. Admixture containing chloride and nitrate are not permitted. The water/cement ratio shall not be more than 0.48. Retempering of the grout shall not be permitted. The

Government of Nepal Ministry of Physical Infrastructure and Transport **Department of Roads** **Project Directorate Office (ADB)** **SASEC Highway Improvement Project-** **Project Preparatory Consultant (SHIP-PPC)** **ADB Loan No: 3722-NEP**	**CONSULTANT:** Soosung Engineering Co. Ltd, Korea in association with ERMC P (Ltd), Nepal and 3PF-Tech Studio of Engineering	**IMPLEMENTING AGENCY:** **DOR, DCID** **ROAD NAME:** **East West Highway (H01)** **Butwal - Gorusinghe Section**	**SHEET TITLE:** General Notes-1 of Ghamaha Bridge (46/H001/297_A)	**SCALE:** As Shown		**NAME**	**SIGNATURE**	**REV NO.**	**DESCRIPTION**	**DATE:** November,2022
					DESIGNED BY:	Saroj Bhattarai				
					CHECKED BY:	P. Upadhyaya				**DWG.NO.:** 297_Gamaha
					APPROVED BY:	Dr. T.H.Choi				**SHEET NO.:** 01/26

grout shall be mixed with mechanical mixers and shall be continuously kept agitated until pumped in.

Stages and sequence of Prestressing

- The Precast composite girders shall be prestressed in two stages. The specified number of the tendons shall be tensioned in the prescribed sequence shown in the respective drawing sheet.
- The remaining tendons shall be tensioned after specified days after casting of the deck slab, in the sequence shown in the respective drawing sheet.
- The prestressing of the precast girder shall be started only after confirming that the cube specimen has achieved 100% of the prescribed compressive strength. No early prestressing allowed.

Construction methodology and sequence for Precast Prestressed Composite superstructure

- The main girders are be precast near the bridge site at suitable location (approach road or dry river bed, if available) on well prepared casting yard. The choice of location also depends upon the equipment available for lifting or launching the girders. After completion of the prestressing works the girders are either lifted by suitable cranes or pushed/launched with the help of rails and jacks or launching girders and placed carefully over the already completed substructure. Care shall be taken that all the preparatory works for the bearings are done properly before the launching/placing of the girders.
- Lifting shall be done only by the hooks provided at both ends. In case of jacking the jacking points shall be only just under the location of the hooks. No support, lifting or jacking is allowed at any other section of the girder
- After placing all the main girders and finishing the works on the bearings, the formwork for deck slab and cross girders are prepared. All the formwork for deck slab and cross girders shall be supported by the main girders. The main girders shall remain un-propped during casting of the deck slab. Similarly there shall be no false-work or props from the ground or part of substructure during casting of the deck slab.
- The Contractor shall ensure stability of the girders during all stages of construction.
- Dimensional tolerances for the precast girders shall be as per IRC:SP:71-2018, Clause 4.10. If not prescribed otherwise, transportation and handling operation shall follow the guidelines in Clause 4.9 of the same documents.

Prestressing of Precast Girder only (Stage 1)	After 28 days of casting or confirming 100% compressive strength of concrete
Lifting/Launching of the Girder	Within 14 days of first stage prestressing
Casting of the Deck Slab	Within 14 days of placing of girder over substructure
Prestressing of Girder (Stage 2)	After 14 days of casting of deck slab
Casting of Footpath, Crash Barrier, Wearing Course etc	Preferably within 7 days but not later than 14 days of Second stage prestressing

14 days of Second stage prestressing

Deviation from the above time-line is subject to approval by the engineer. No other vehicle except the concreting apparatus are allowed on the deck until the deck slab has attained its full specified strength.

Construction methodology for Cast-in-situ RCC superstructure

- Construction of Monolithic cast in situ RCC superstructure shall follow the standard practices. The falsework for the girders and deck slab are supported on the ground and removed after specified time period.

period.

Notes on Bearings

- The contractor shall supply, provide and install the bearings designed according to the loadings and other relevant information provided in the drawings or BOQ.
- The dimension and number of layers of the Elastomeric bearings shown in the drawings are tentative. The bearings shall be designed, fabricated, tested and installed as per IRC:83 - 2018, Part-2 for elastomeric bearing and Part-3 for Pot-PTFE bearings, as the case applies.

Notes on Foundation and Substructure

- Standard Specifications and Special provisions to the Standard Specifications (if any) and specific notes on the drawings shall be followed for the construction of the abutments, piers and foundations.
- Backfill behind the abutment shall be places only after the concrete has achieved full 28 days strength. Heavy compaction equipment weighing more than 10 Ton shall not be used within 2.0 meters from the back of the abutment until all the works on superstructure is completed.
- The graded backfill behind the abutment shall be at a slope not steeper than 62 degrees, starting from the back of the footing. The back fill material dry density shall be within 1900 to 2200 kN/m^3 and moisture content between 9 to 15%
- In case of new bridge adjacent to the existing bridge, care shall be taken not to render any damage to the elements of the existing bridge. Particular attention shall be paid to the foundation of the existing bridge. The contractor shall ensure that excavation for the foundation of the new bridge does not cause instability or settlement of the foundation of the existing bridge.
- If the existing bridge has a shallow foundation, the contractor shall protect the existing foundation by sheet piling or any other suitable means to the satisfaction of the engineer, before excavating for the foundation of the new bridge.

General Note: (For all Pile Foundation)

- Drilling/Boring works for pile is allowed only with rotary or oscillator type drilling equipment. No percussion method is allowed .Stability of borehole shall be ensured by the use of temporary casing.Use of Water methods of borehole stability is subject to approval by the engineer, but in such case use of water/air/chemical jetting for boring process shall not be allowed.
- In case of drilling/boring without temporary casing,the contractor should ensure the stability and uniformity of the borehole before lowering the reinforcement cage and during concreting.
- Boring/Drilling of the piles is preferred in a staggered pattern.Boring/Drilling for any pile shall not commence before 24 hours of completion of concreting of any pile within a radius of 6 meters from its center.
- In case of drilling/boring without temporary casing , the pile shall be lined with 6mm thick permanent casing from the bottom of the pilecap down to 0.5 m below the maximum scour depth or 1.5 whichever is larger.

Government of Nepal Ministry of Physical Infrastructure and Transport **Department of Roads** **Project Directorate Office (ADB)** **SASEC Highway Improvement Project-** **Project Preparatory Consultant (SHIP-PPC)** **ADB Loan No: 3722-NEP**	**CONSULTANT:** Soosung Engineering Co. Ltd, Korea In association with ERMC P (Ltd) and Tech Studio of Engineering Nepal	**IMPLEMENTING AGENCY:** **DOR, DCID** **ROAD NAME:** **East West Highway (H01)** **Butwal - Gorusinghe Section**	**SHEET TITLE:** Topographic Map of Ghamaha Bridge (46/H001/297_A)	**SCALE:** 1:1		**NAME**	**SIGNATURE**	**REV NO.**	**DESCRIPTION**	**DATE:** November , 2022 **DWG.NO.:** 297_Ghamaha **SHEET NO.:** 09/26
					Designed by:	Saroj Bhattarai				
					Checked by:	P. Upadhyaya				
					Approved by:	Dr. T.H.Choi				

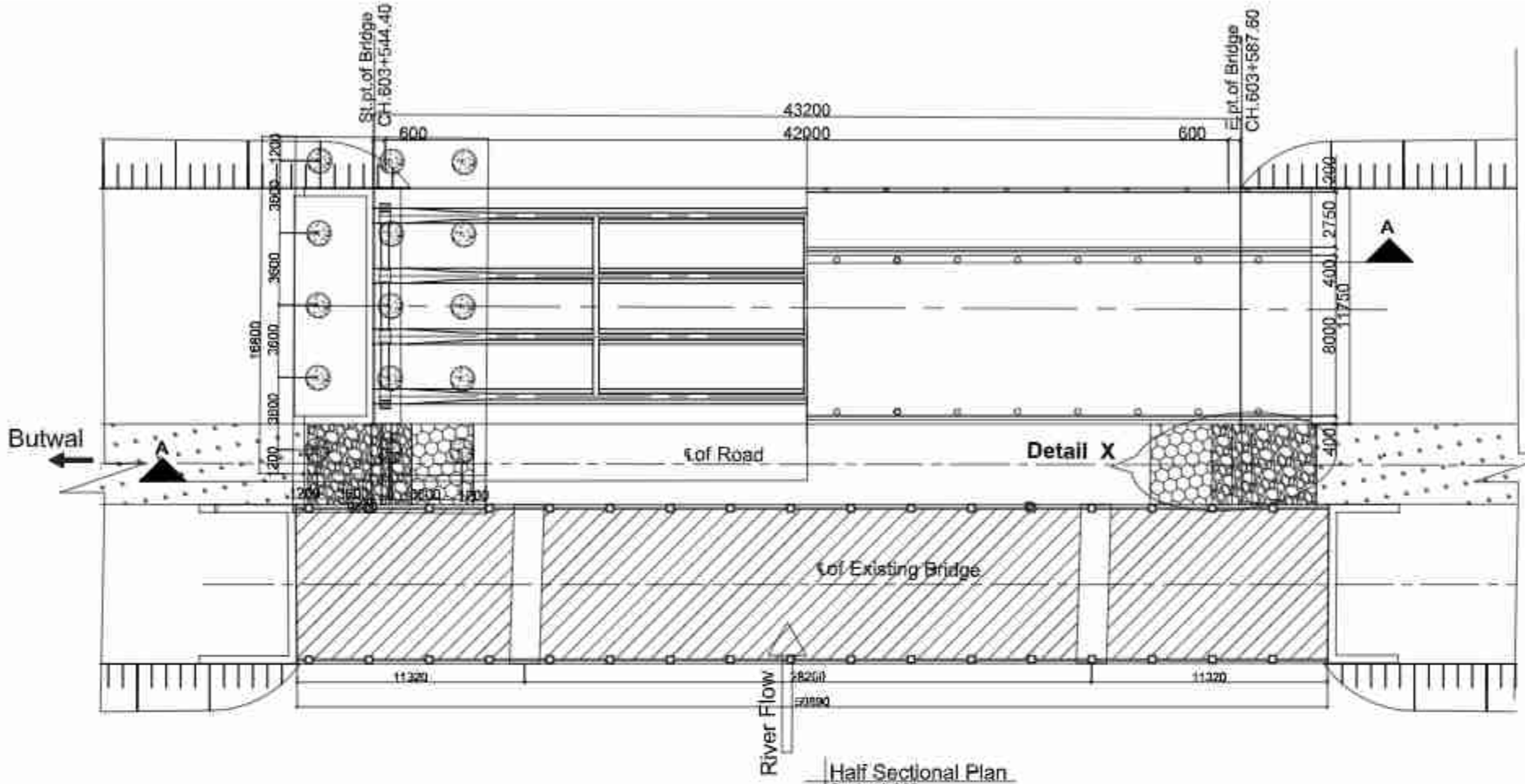

Half Sectional Plan
Scale:-1:300

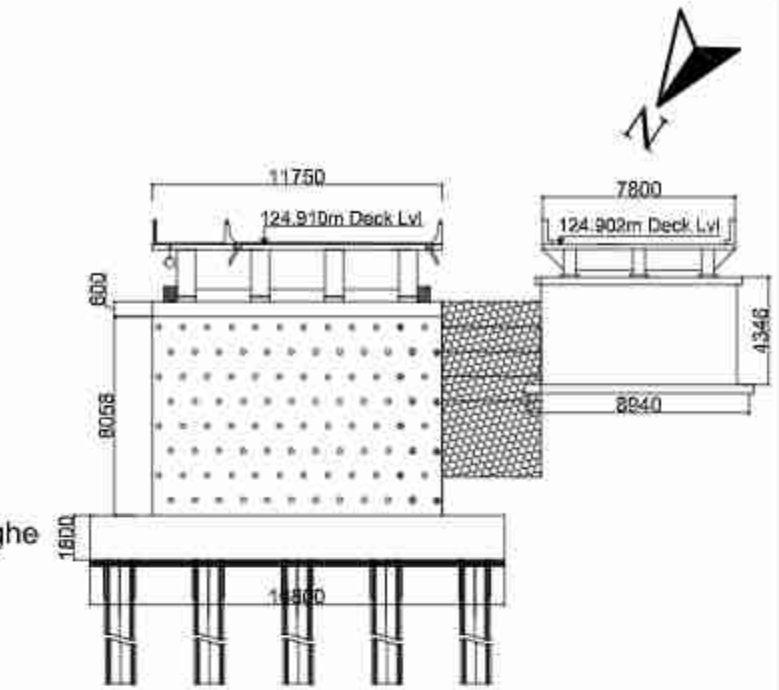

Elevation of Abutment
Scale:-1:300

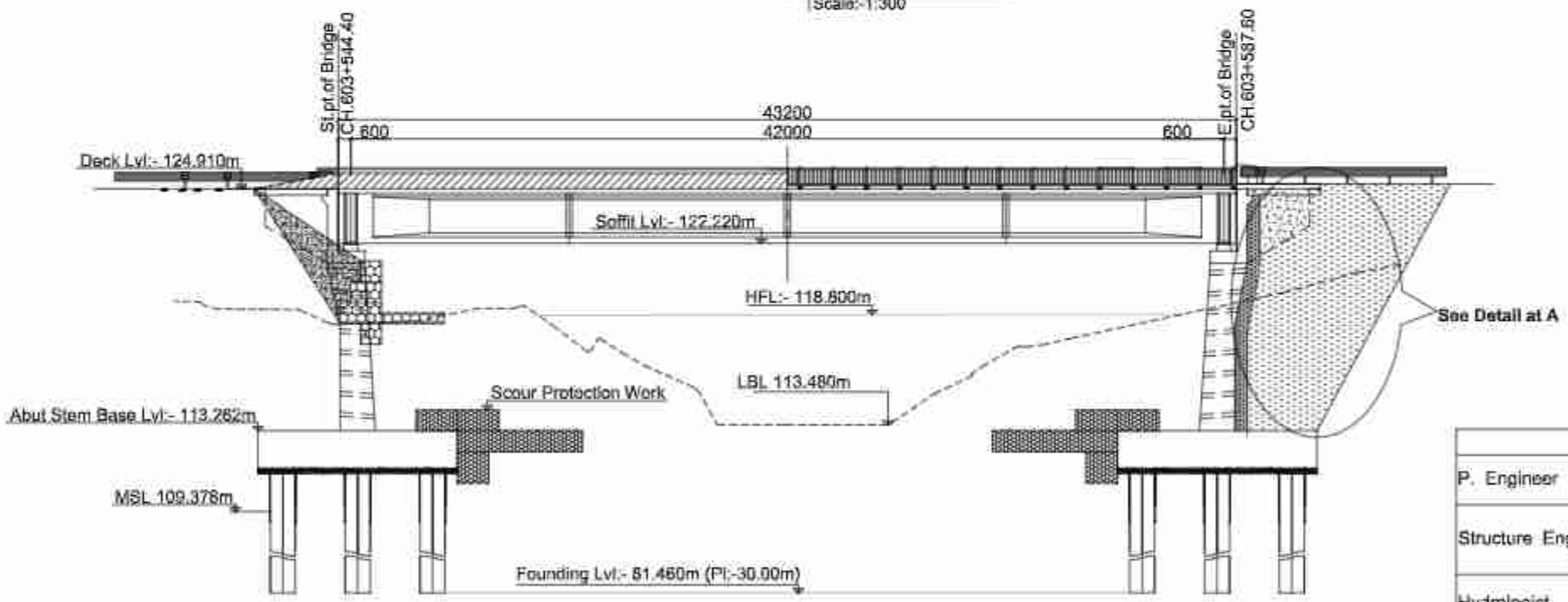

Sectional Elevation
Scale:-1:300

Note :-
MSL :- Maximum Scour Level
HFL :- High Flood Level
LBL :- Lowest Bed Level
RL :- Reduced Level
PL :- Pile Length

	Name(NEC Number)	Signature
P. Engineer	P. Upadhyaya (Civil A 675)	
Structure Engineer	K.P.Wagle(Civil A 127) / P.Shrestha(Civil A 676) / S.Bhattarai (Civil A 904)	
Hydrologist	Dr. P.C. Jha(Civil A 186) / S. Adhikari (Civil A 408)	
Geotechnical Engineer	A. Adhikari(ka 199) / Dr. V . R. S. Shahi	

Government of Nepal Ministry of Physical Infrastructure and Transport **Department of Roads** **Project Directorate Office (ADB)** **SASEC Highway Improvement Project-** **Project Preparatory Consultant (SHIP-PPC)** **ADB Loan No: 3722-NEP**	**CONSULTANT:** Soosung Engineering Co. Ltd, Korea In association with ERMC P (Ltd) and Tech Studio of Engineering Nepal	**IMPLEMENTING AGENCY:** **DOR, DCID** **ROAD NAME:** **East West Highway (H01)** **Butwal - Gorusinghe Section**	**SHEET TITLE:** General Arrangement of Ghamaha Bridge (46/H001/297_A)	**SCALE:** 1:300		**NAME**	**SIGNATURE**	**REV NO.**	**DESCRIPTION**	**DATE:** November , 2022
					Designed by:	Saroj Bhattarai				**DWG.NO.:** 297_Gamaha
					Checked by:	P. Upadhyaya				
					Approved by:	Dr. T.H.Choi				**SHEET NO.:** 04/26

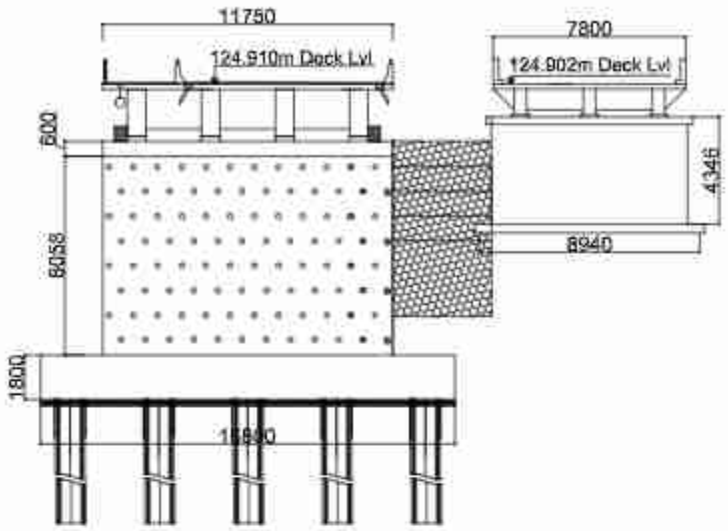

Elevation of Abutment
Scale:-1:300

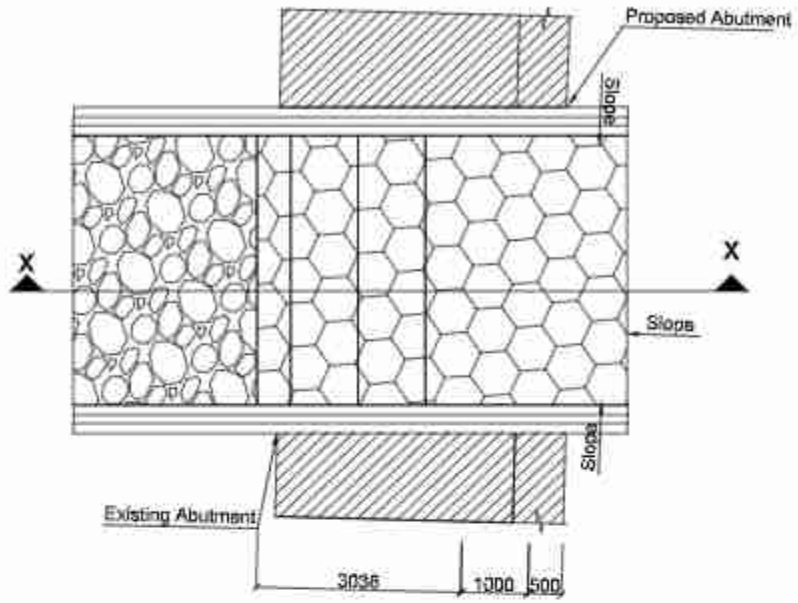

Detail Plan of X
(Transition Between Approch Embankmant)
Scale:-1:100

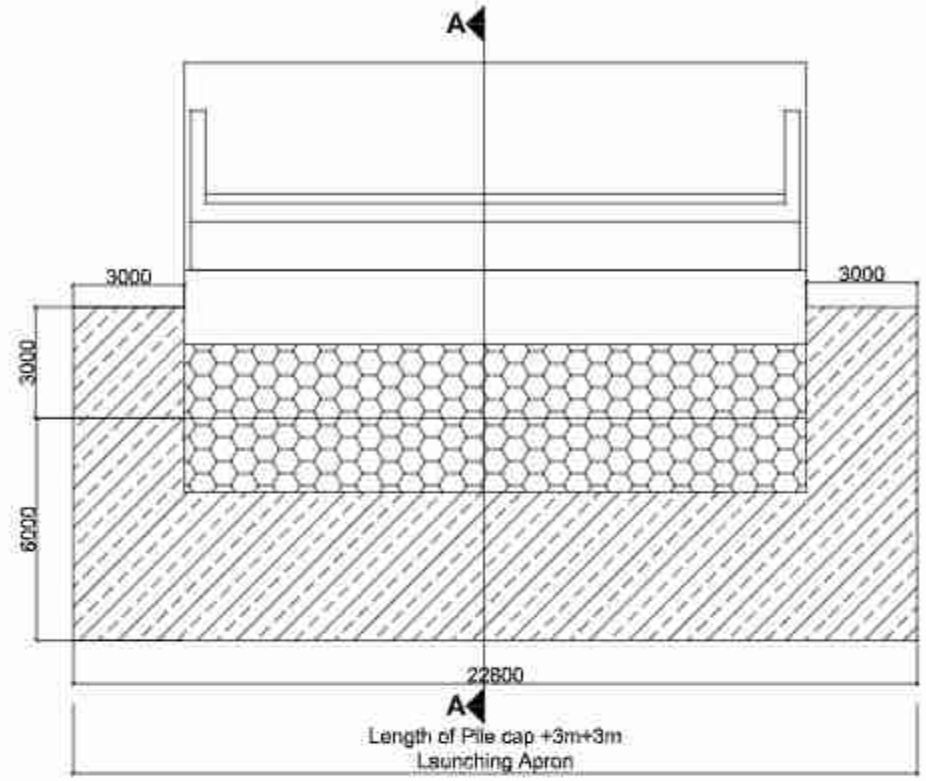

Plan for Scour Proctetion
Scale:-1:200

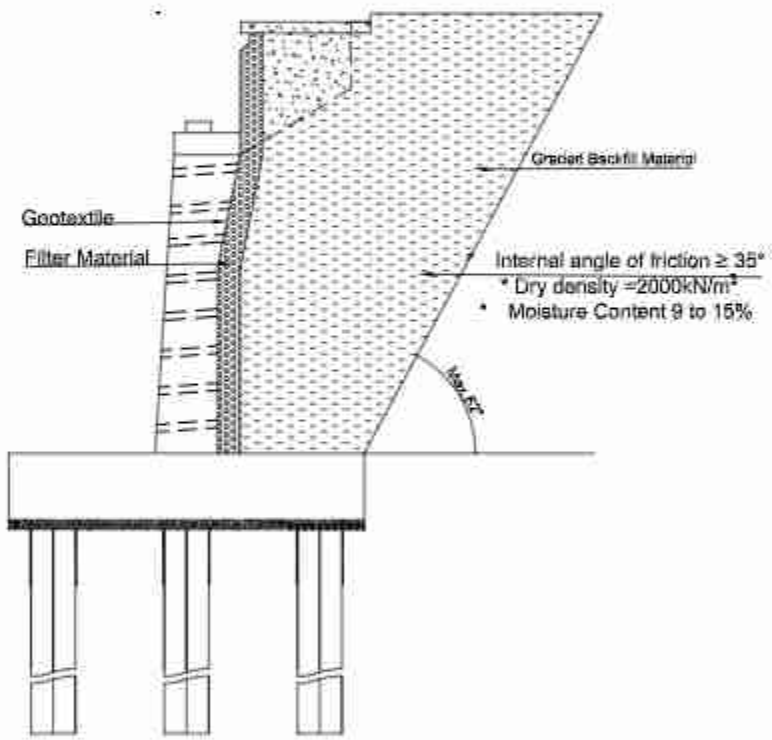

Detail of A
Scale:-1:200

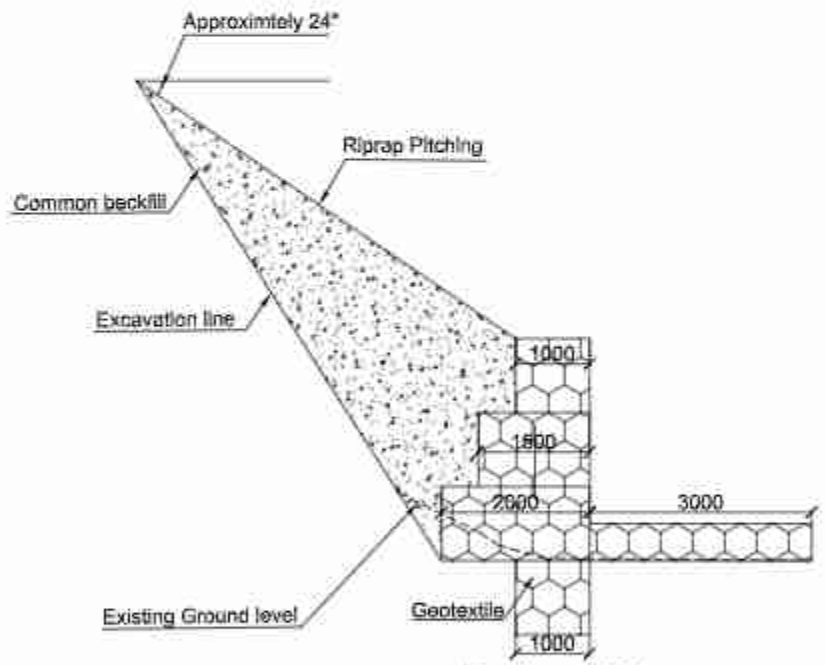

Section at X-X
Scale:-1:100

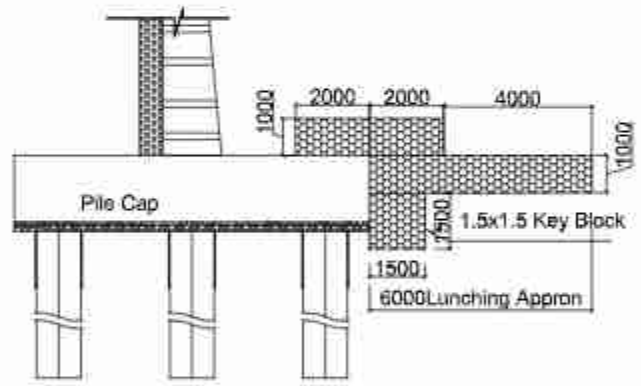

Section At A-A
Scale:-1:200

	Name(NEC Number)	Signature
P. Engineer	P. Upadhyaya (Civil A 675)	
Structure Engineer	K.P.Wagle(Civil A 127) / P.Shrestha(Civil A 676) / S.Bhattarai (Civil A 904)	
Hydrologist	Dr. P.C. Jha(Civil A 166) / S. Adhikari (Civil A 408)	
Geotechnical Engineer	A. Adhikari(ka 199) / Dr. V . R. S. Shahi	

Government of Nepal Ministry of Physical Infrastructure and Transport **Department of Roads** **Project Directorate Office (ADB)** **SASEC Highway Improvement Project-** **Project Preparatory Consultant (SHIP-PPC)** **ADB Loan No: 3722-NEP**	**CONSULTANT:** Soosung Engineering Co. Ltd, Korea in association with ERMC P (Ltd) and -Tech Studio of Engineering Nepal	**IMPLEMENTING AGENCY:** **DOR, DCID** **ROAD NAME:** **East West Highway (H01)** **Butwal - Gorusinghe Section**	**SHEET TITLE:** General Arrangement of Ghamaha Bridge (46/H001/297_A)	**SCALE:** 1:300		**NAME**	**SIGNATURE**	**REV NO.**	**DESCRIPTION**	**DATE:** November , 2022
					Designed by:	Saroj Bhattarai				**DWG.NO.:** 297_Gamaha
					Checked by:	P. Upadhyaya				
					Approved by:	Dr. T.H.Choi				**SHEET NO.:** 06/26

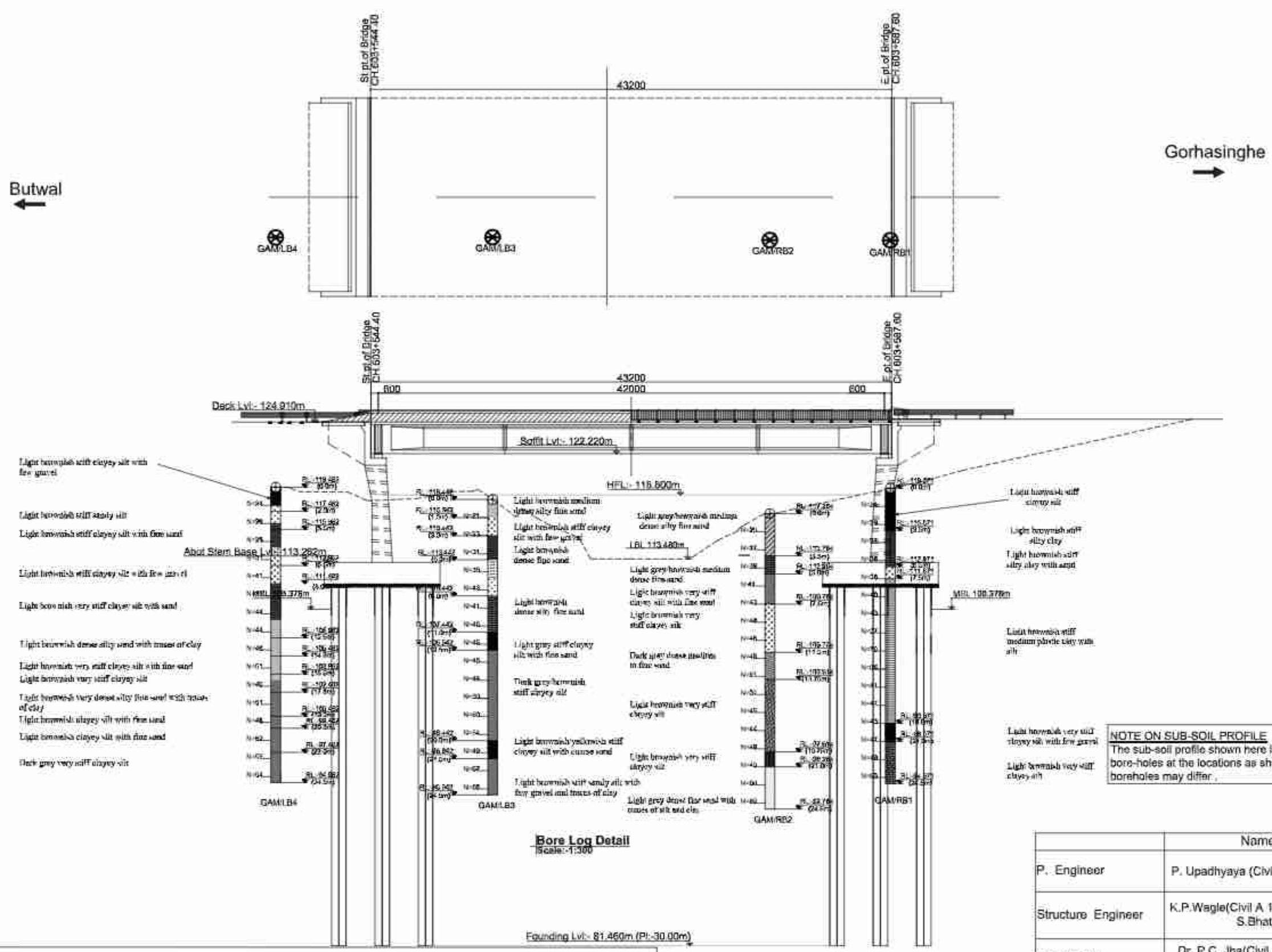

Bore Log Detail
Scale:-1:300

Location	Design Pile Length m	Design Working load on pile (non - seismic cassa)kN	Allowable Bearing Capacity on pile (Scour case) kN	Allowable Bearing Capacity of the Pile (Non Scour case)kN
Abutment	30	2538	3046	3046
Pier	00	00	00	00

Borehole No : GAM/LB03
Easting : 83° 20' 00.12" Northing : 27° 41' 17.13" Elevation, m : 118.442
Borehole No : GAM/LB 04
Easting : 83°20' 00.75 " Northing : 27° 42' 17.15" Elevation, m : 119.482
Borehole No : GAM/RB01
Easting : 83° 19' 58.95" Northing : 27° 41' 17.27" Elevation, m : 119.371
Borehole No : GAM/RB02
Easting : 83° 19' 59.24" Northing : 27° 41' 17.33" Elevation, m : 117.264

Note :-
MSL :- Maximum Scour Level
HFL :- High Flood Level
LBL :- Lowest Bed Level
RL :- Reduced Level
PL :- Pile Length

NOTE ON SUB-SOIL PROFILE
The sub-soil profile shown here is based on information obtained from the investigation bore-holes at the locations as shown.The actual soil type away from the vicinity of the boreholes may differ .

	Name(NEC Number)	Signature
P. Engineer	P. Upadhyaya (Civil A 675)	
Structure Engineer	K.P.Wagle(Civil A 127) / P.Shrestha(Civil A 676) / S.Bhattarai (Civil A 904)	
Hydrologist	Dr. P.C. Jha(Civil A 166) / S. Adhikari (Civil A 408)	
Geotechnical Engineer	A. Adhikari(ka 199) / Dr. V . R. S. Shahi	

Government of Nepal
Ministry of Physical Infrastructure and Transport
Department of Roads
Project Directorate Office (ADB)
SASEC Highway Improvement Project-
Project Preparatory Consultant (SHIP-PPC)
ADB Loan No: 3722-NEP

CONSULTANT:
Soosung Engineering Co. Ltd, Korea
in association with
ERMC P (Ltd)
and
J.Tech Studio of Engineering Nepal

IMPLEMENTING AGENCY:
DOR, DCID

ROAD NAME:
East West Highway (H01)
Butwal - Gorusinghe Section

SHEET TITLE:
Bore Log of Ghamaha Bridge (46/H001/297_A)

SCALE:
1:300

	NAME	SIGNATURE	REV NO.	DESCRIPTION
Designed by:	Saroj Bhattarai			
Checked by:	P. Upadhyaya			
Approved by:	Dr. T.H.Choi			

DATE: November , 2022
DWG.NO.: 297_Gamaha
SHEET NO.: 06/26

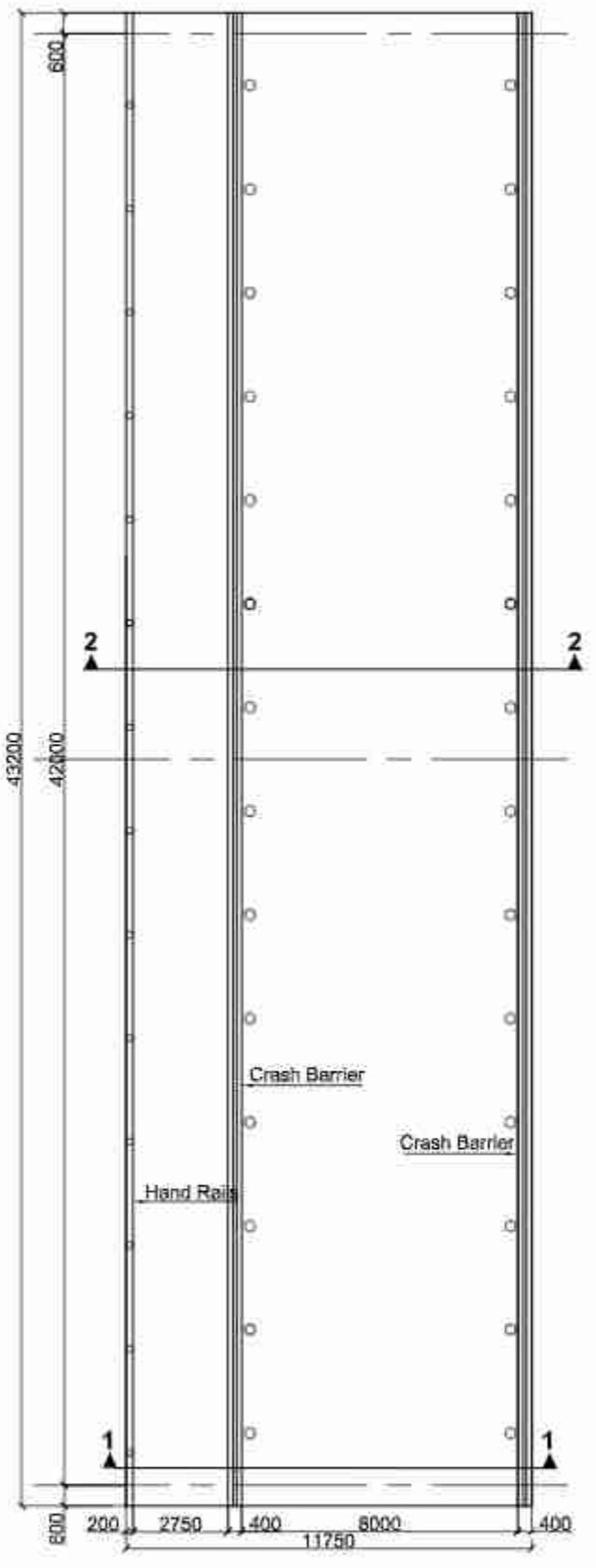

Plan Of Deck
Scale:-1:200

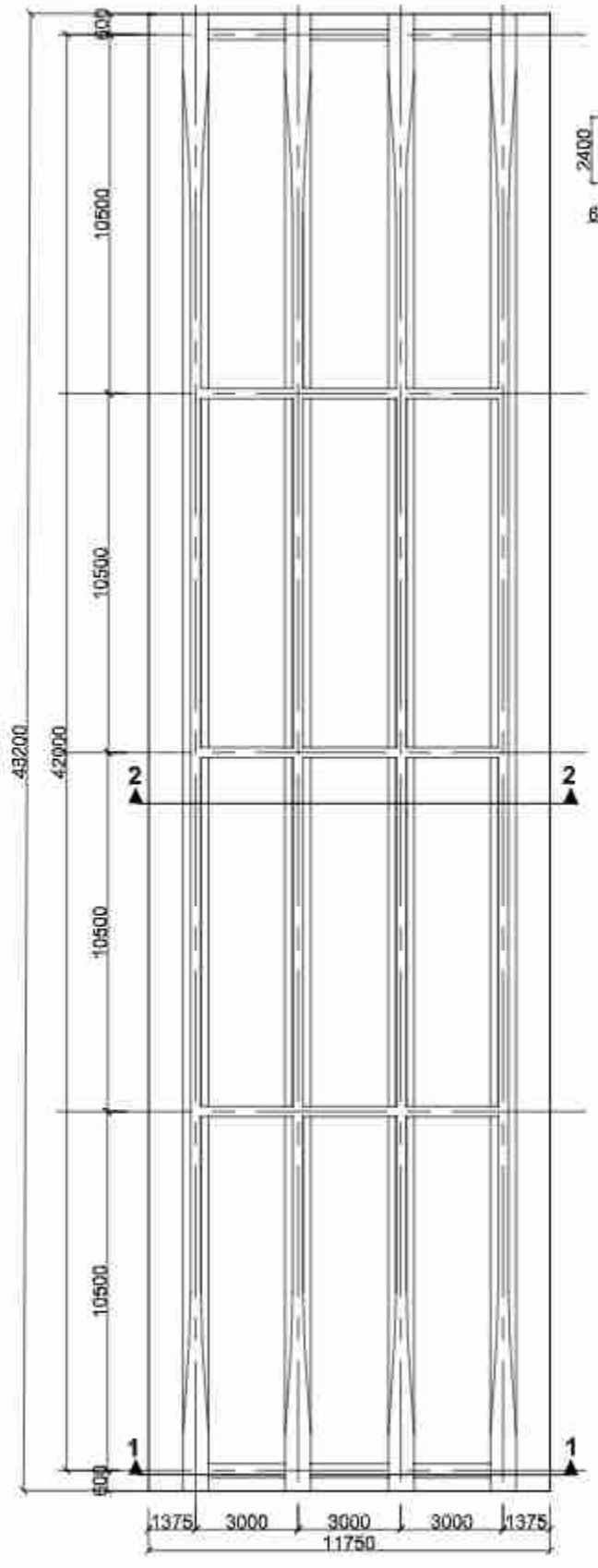

Plan Of Girder
Scale:-1:200

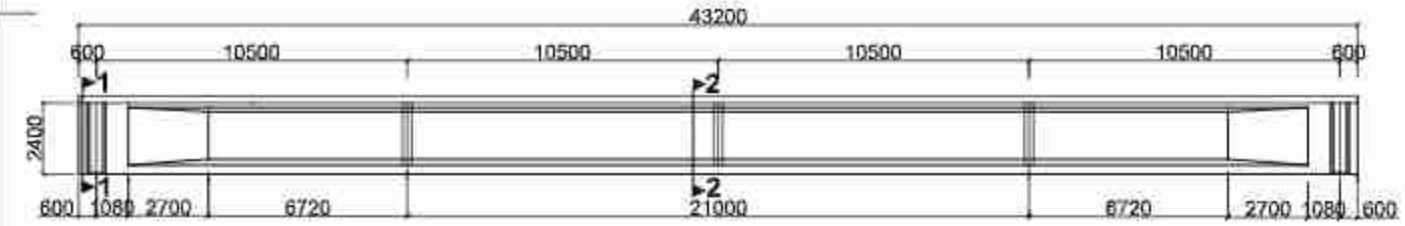

Longitudional Sectional Elevation
Scale:-1:250

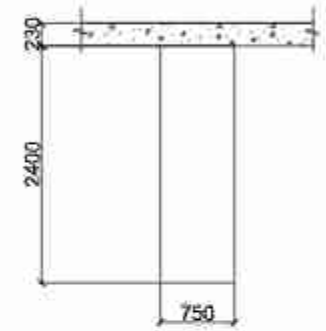

Section 1-1 Main Girder
Scale:-1:75

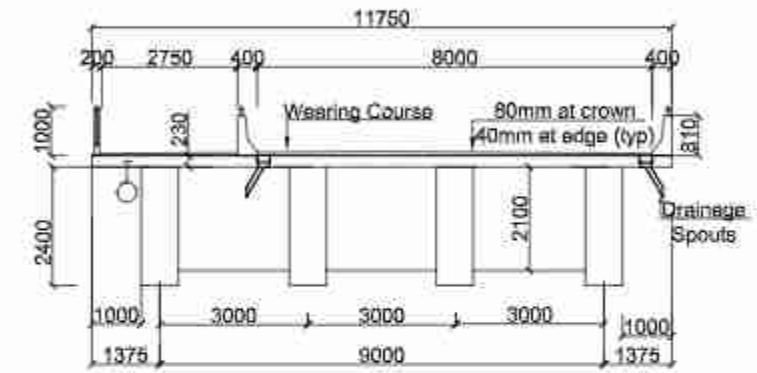

Section At 1-1
Scale:-1:150

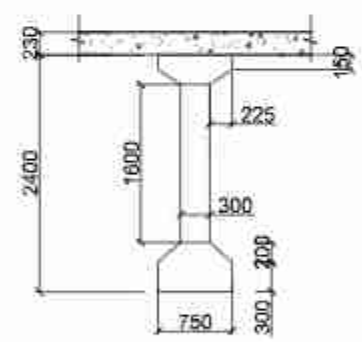

Section 2-2 Main Girder
Scale:-1:75

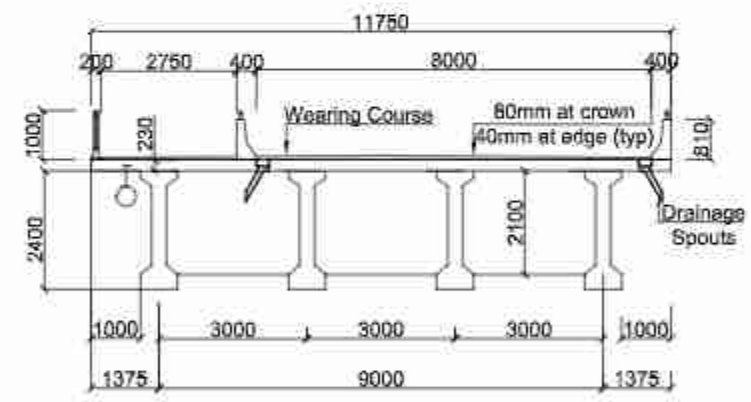

Section At 2-2
Scale:-1:150

NOTE:
For maintenance, the deck shall be simultaneously jacked up at the locations marked "J"

NOTE:
The bridge has been designed to safely carry three driving lanes. If required in future the footpath can be used as driving lane, moving the crash barrier to the location of the hand-rails.

Government of Nepal Ministry of Physical Infrastructure and Transport **Department of Roads** **Project Directorate Office (ADB)** **SASEC Highway Improvement Project-** **Project Preparatory Consultant (SHIP-PPC)** **ADB Loan No: 3722-NEP**	**CONSULTANT:** Soosung Engineering Co. Ltd, Korea in association with ERMC P (Ltd), Nepal and -Tech Studio of Engineering	**IMPLEMENTING AGENCY:** **DOR, DCID** **ROAD NAME:** **East West Highway (H01)** **Butwal - Gorusinghe Section**	**SHEET TITLE:** Detail of Superstructure of Ghamaha Bridge (46/H001/297_A)	**SCALE:** As Shown		**NAME**	**SIGNATURE**	**REV NO.**	**DESCRIPTION**	**DATE:** November,2022
					DESIGNED BY:	Saroj Bhattarai				**DWG.NO.:** 297_Gamaha
					CHECKED BY:	P. Upadhyaya				
					APPROVED BY:	Dr. T.H.Choi				**SHEET NO.:** 07/26

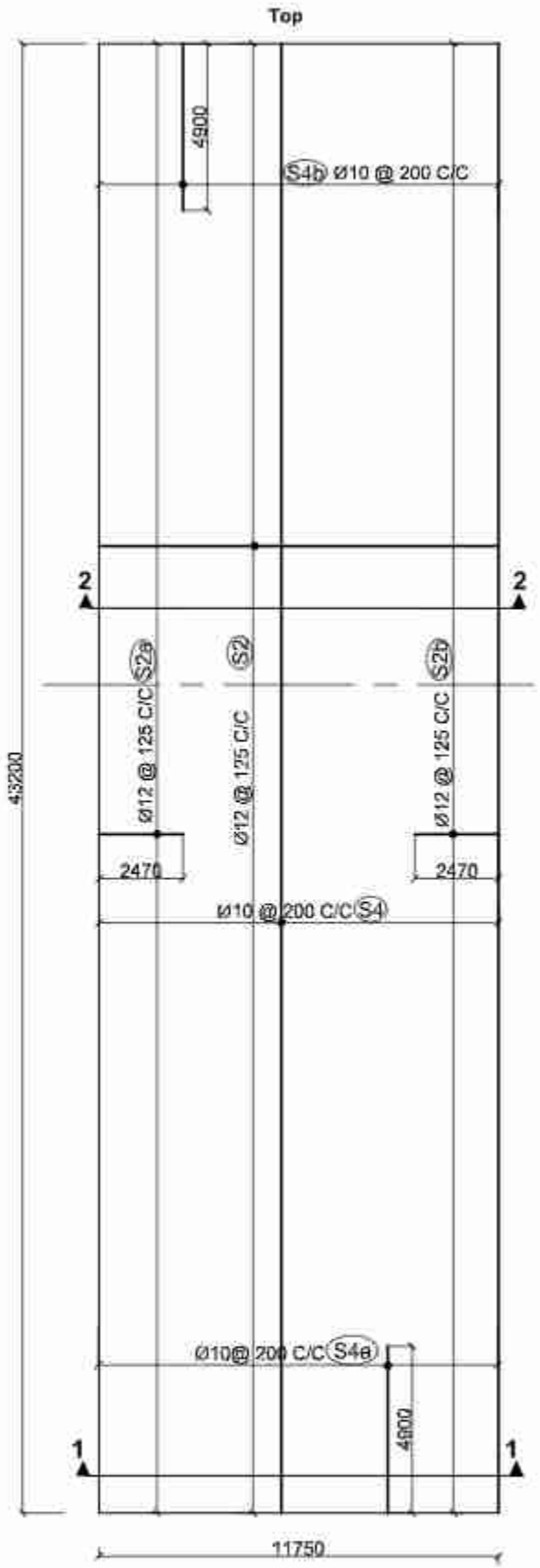

Reinforcement Details Of Deck Slab
Scale:-1:200

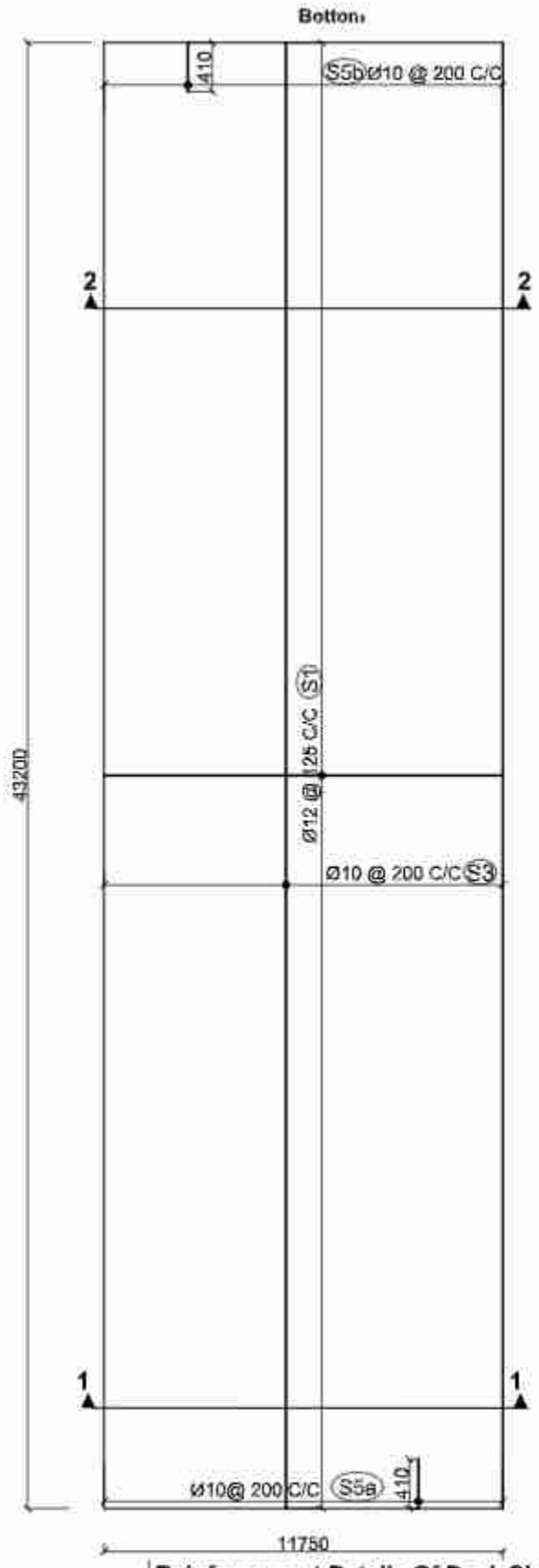

Reinforcement Details Of Deck Slab
Scale:-1:200

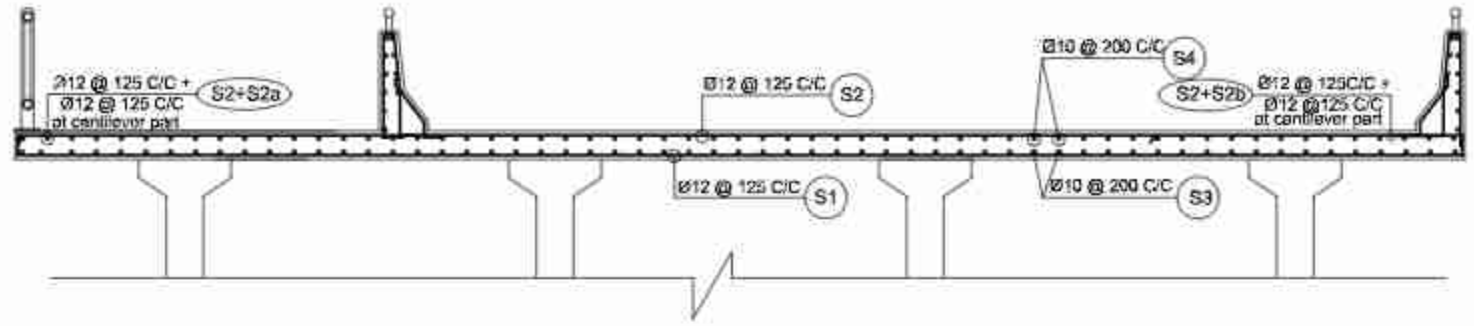

Section At 2-2
Scale:-1:50

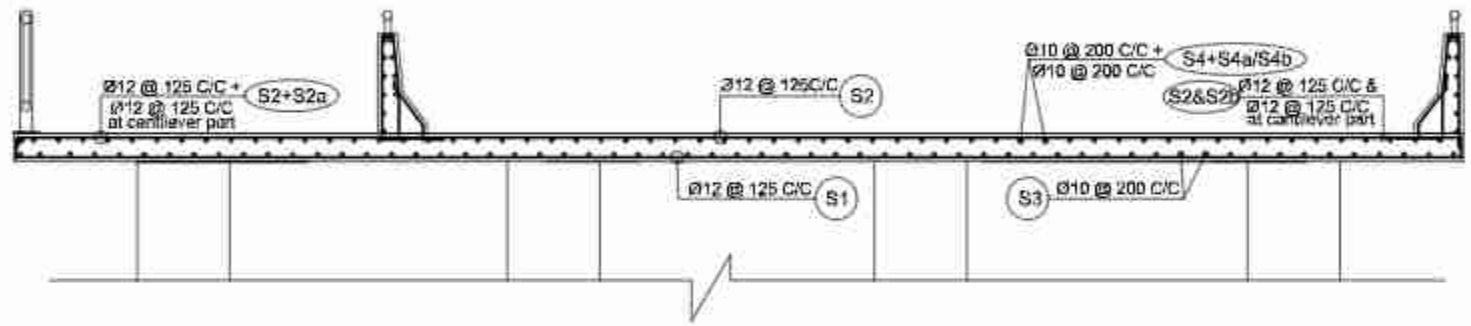

Section At 1-1
Scale:-1:50

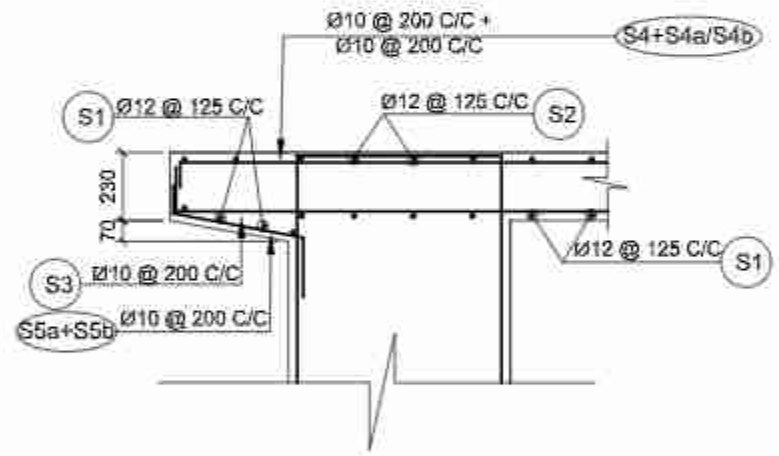

Reinforcement Details At Deck Extension Between The Main Girder

NOTE:

1.On Shear Connection:
The transverse bars of the deck slab(S2) shall be tied to vertical stirrups of the longitudinal girders.

2.Top Surface of the Main Girder:
Surface to be roughened by wire brush immediately after initial setting. The surface shall be properly cleaned by pressure blower prior to casting of the deck concrete

3.On Wearing Course:
The level of wearing course along the longitudinal direction shall be kept horizontal throughout the length of the deck. The thickness of wearing course towards the ends along the deck shall be increased suitably to compensate for the slope due to hogging of the girder by pre stress.

Government of Nepal Ministry of Physical Infrastructure and Transport **Department of Roads** **Project Directorate Office (ADB)** **SASEC Highway Improvement Project-** **Project Preparatory Consultant (SHIP-PPC)** **ADB Loan No: 3722-NEP**	**CONSULTANT:** Soosung Engineering Co. Ltd, Korea in association with ERMC P (Ltd), Nepal and BSE-Tech Studio of Engineeering	**IMPLEMENTING AGENCY:** **DOR, DCID** **ROAD NAME:** **East West Highway (H01)** **Butwal - Gorusinghe Section**	**SHEET TITLE:** Reinforcement Details of Slab of Ghamaha Bridge (46/H001/297_A)	**SCALE:** As Shown		**NAME**	**SIGNATURE**	**REV NO.**	**DESCRIPTION**	**DATE:** November,2022 **DWG.NO.:** 297_Gamaha **SHEET NO.:** 08/26
					DESIGNED BY:	Saroj Bhattarai				
					CHECKED BY:	P. Upadhyaya				
					APPROVED BY:	Dr. T.H.Choi				

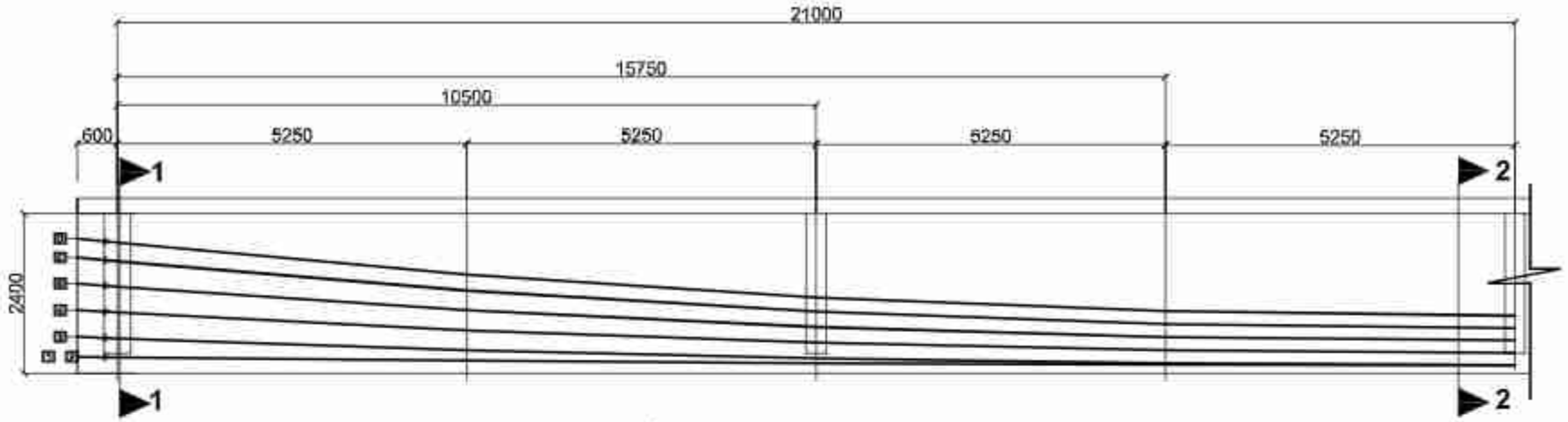

Longitudinal Section Of Main Girder
Scale:-1:100

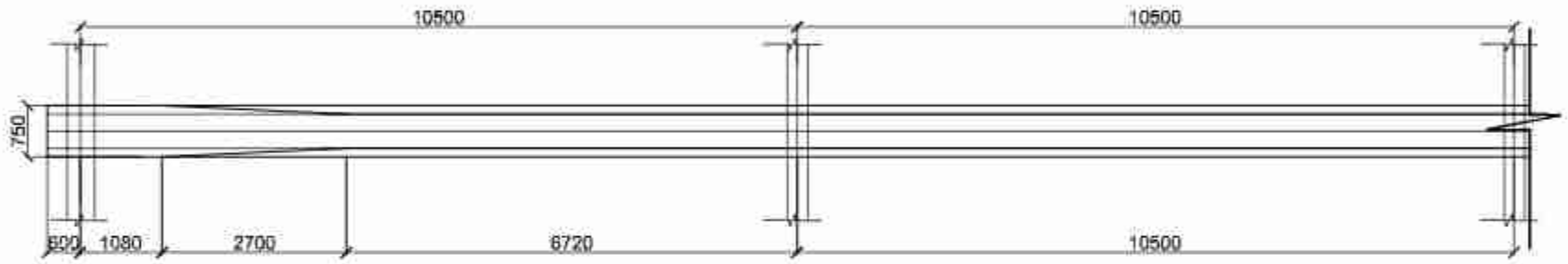

Plan Of Main Girder
Scale:-1:100

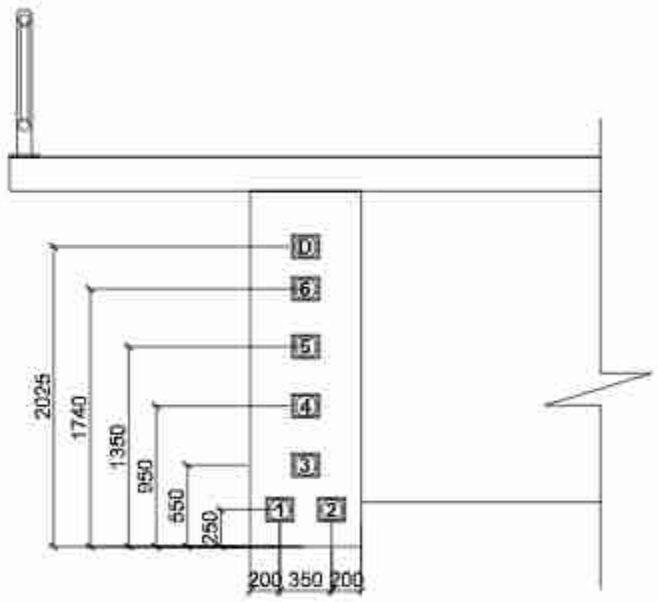

View 1-1
Scale:-1:30

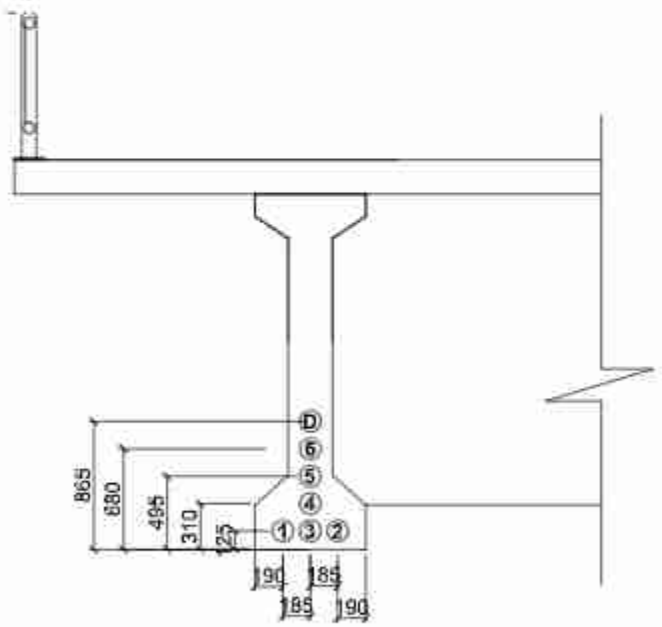

View 2-2
Scale:-1:30

Tendon Layout Data

	Anchor face		Bearing centerline		Intermediate sections						Mid span	
	-600		0		5250		10500		15750		21000	
TENDON	Y	Z	Y	Z	Y	Z	Y	Z	Y	Z	Y	Z
1	250	175	243	178	191	-180	155	-183	132	-185	125	-185
2	250	175	243	178	191	180	155	183	132	185	125	185
3	550	0	527	0	351	0	226	0	150	0	125	0
4	950	0	915	0	650	0	461	0	348	0	310	0
5	1350	0	1303	0	950	0	697	0	546	0	495	0
6	1740	0	1682	0	1244	0	931	0	743	0	680	0
Dummy	2025	0	1962	0	1482	0	1139	0	934	0	865	0

Y = Elevation of the tendon center from the girder soffit
Z = Horizontal distance of the tendon center from the centerline of the girder

Tendon Elongation and Emergence Angles

TENDON	Total Jacking Force KN	Total Extension of both sides	Emergence angle degree
1	2600	305	0.662
2	2600	305	0.662
3	2600	303	2.255
4	2600	303	3.392
5	2600	302	4.526
6	2600	301	5.608
Dummy			6.130

NOTES ON PRE STRESSING:

1. All the prestressing operation shall commence after 28 days of casting,confirming that the cube specimen has achieved 100% of the prescribed compressive strength(M45) No Early Prestressingallowed.
2. Each prestressing Tendon shall be,multistrand cable comprising of 19 strands,each strand of 12.7mm diameter (19K13),7 ply low relaxation,Class-II,High Tensile Steel conforming IS:14268-20/24. Maximum allowable total jacking force = 2733 kN.
3. Prestressings tendon shall be done in 2 stages as follows:

   Stage1

   Precast girder only. After 28days of Casting.

   Tendons to be stressed in stage 1 shall be in the following Sequence:

6	5	4	3	-	-	-	-

   Total Jacking Force to each tendon in stage 1= 2600kn

   Stage2

   After 14 days of Casting of deck slab.

   Tendons to be stressed in stage 2 shall be in the following Sequence:

2	1	-	-	-	-	-	-

   Total Jacking Force to each tendon in stage 2= 2600kn

   Casting of footpath,crash barriers and wearing course will done only after second stage prestressing.
4. Jacking of tendons shall be done from both ends. All the prestress losses(instant and long term) have been already considered in the design.
5. The composite action is considered only for live loads. There shall be no false-work or props to the girder during 2nd stage of prestressing.The formwork for deck slab can be supported on the main precast girders.
6. The cable elongation at their jacking ends,mentioned are based on the assumption that the Modulus of Elasticity of the cable steel is 1.95x10^5 Mpa.The manufacturers specification shallbe followed if provided.
7. The tendon ducts shall be properly secured to the rebars to maintain the profile throughout concreting process.
8. The specified profile and alignments of the tendon shall be strictly maintained.If required,the reinforcement bars can be suitably respositioned or slightly bent to accommodate the tendons as per the engineers instruction.

NOTES ON DUMMY CABLE
The cable marked "D" is for future tensioning or in case of emergency or excessive prestress loss.
No tendon shall be provided during construction but the sheating,anchorage block ,bruting reinforcement similar to the other tendons shall be properly installed.
The duct shall be left hollow ensuring it is free of debris inside.
The anchorage should be capped suitably to keep it free from ingress of foreign material and marked "D" to identify in future.

Government of Nepal Ministry of Physical Infrastructure and Transport **Department of Roads** **Project Directorate Office (ADB)** **SASEC Highway Improvement Project-** **Project Preparatory Consultant (SHIP-PPC)** **ADB Loan No: 3722-NEP**	**CONSULTANT:** Soosung Engineering Co. Ltd, Korea in association with ERMC P (Ltd), Nepal and BBF-Tech Studio of Engineeering	**IMPLEMENTING AGENCY:** **DOR, DCID** **ROAD NAME:** **East West Highway (H01)** **Butwal - Gorusinghe Section**	**SHEET TITLE:** Prestressing Details of Main Girder of Ghamaha Bridge (46/H001/297_A)	**SCALE:** As Shown		**NAME**	**SIGNATURE**	**REV NO.**	**DESCRIPTION**	**DATE:** November,2022
					DESIGNED BY:	Saroj Bhattarai				**DWG.NO.:** 297_Gamaha
					CHECKED BY:	P. Upadhyaya				
					APPROVED BY:	Dr. T.H.Choi				**SHEET NO.:** 09/26

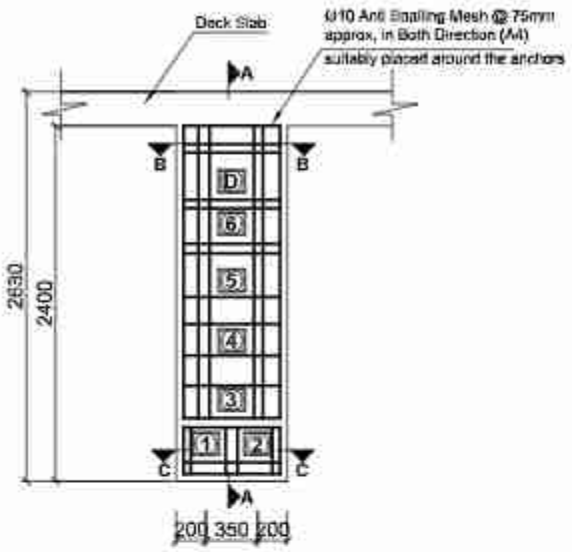

Anti Spalling Reinforcement
Scale:-1:50

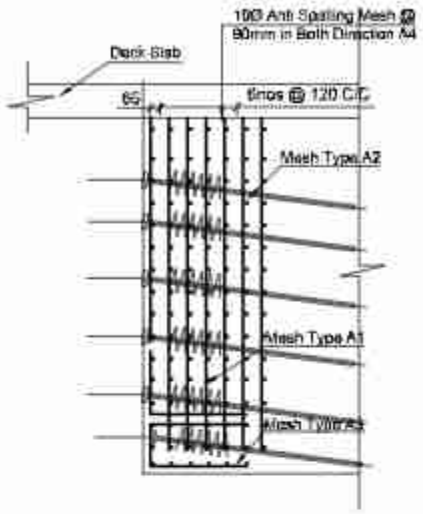

Section At A-A
Scale:-1:50

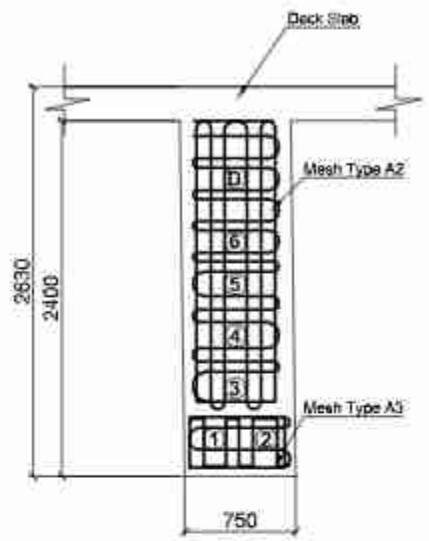

Section At D-D
Scale:-1:50

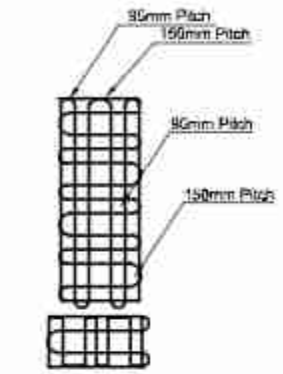

Near The Anchor Plate

Mesh Type A2a
Scale:-1:50

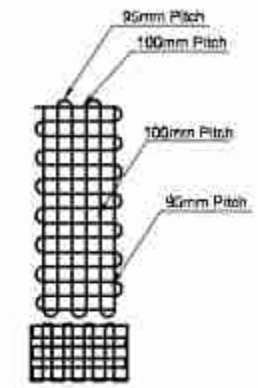

Away from Anchor Plate

Mesh Type A2b
Scale:-1:50

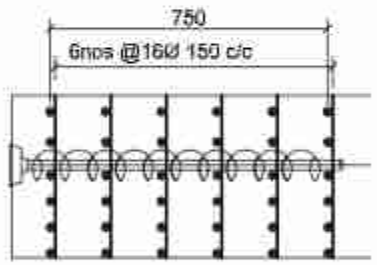

Section At B-B
Scale:-1:20

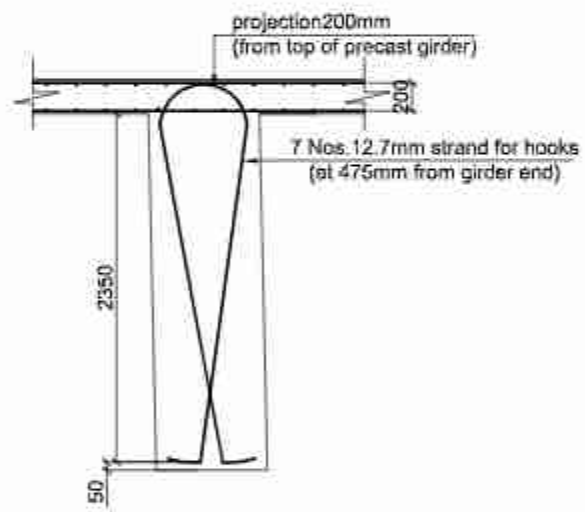

Hook Details At Both Ends Of Gride
Scale:-1:50

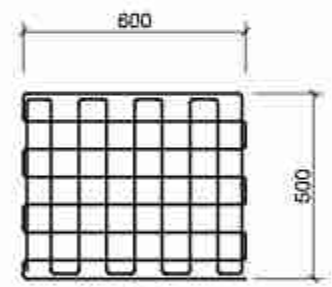

Pitch 75 bothways

Mesh Type A3
Scale:-1:20

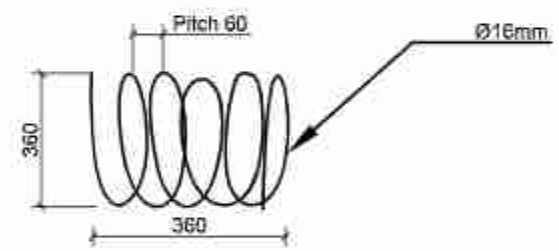

Typical Detail Of Spiral reainforcement A1
Scale:-1:20

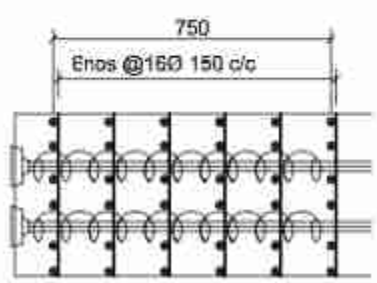

Section At C-C
Scale:-1:20

NOTE:
1. The pitch of the mesh should be adjusted to accommodate the anchors and to maintain the duct profile.
2. The spiral and mesh reinforcement shown is indicative, use the anchorage manufacturer's specification if provided.

Government of Nepal Ministry of Physical Infrastructure and Transport Department of Roads Project Directorate Office (ADB) SASEC Highway Improvement Project- Project Preparatory Consultant (SHIP-PPC) ADB Loan No: 3722-NEP	CONSULTANT:	IMPLEMENTING AGENCY:	SHEET TITLE:	SCALE:		NAME	SIGNATURE	REV NO.	DESCRIPTION	DATE:
	Soosung Engineering Co. Ltd, Korea in association with	DOR, DCID	Anchorage Details of Ghamaha Bridge (46/H001/297_A)	As Shown	DESIGNED BY:	Saroj Bhattarai				November,2022
	ERMC P (Ltd), Nepal and	ROAD NAME: East West Highway (H01)			CHECKED BY:	P. Upadhyaya				DWG.NO.: 297_Gamaha
	3Tech Studio of Engineering	Butwal - Gorusinghe Section			APPROVED BY:	Dr. T.H.Choi				SHEET NO.: 10/26

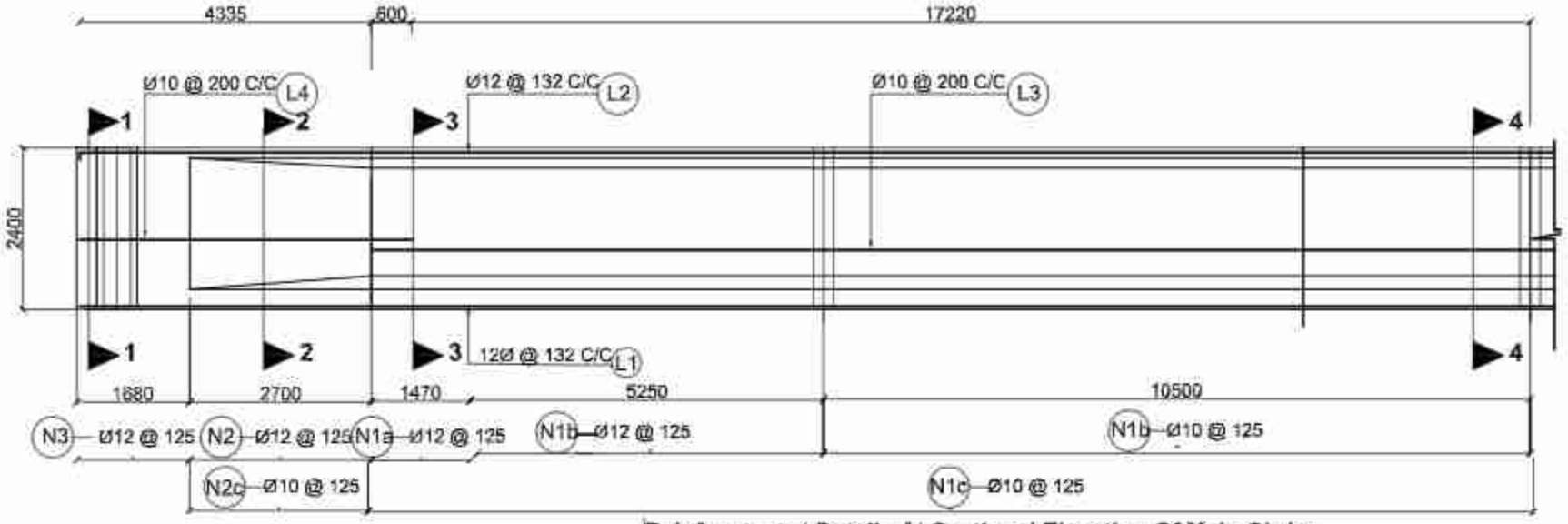

Reinforcement Details At Sectional Elevation Of Main Girder
Scale:-1:100

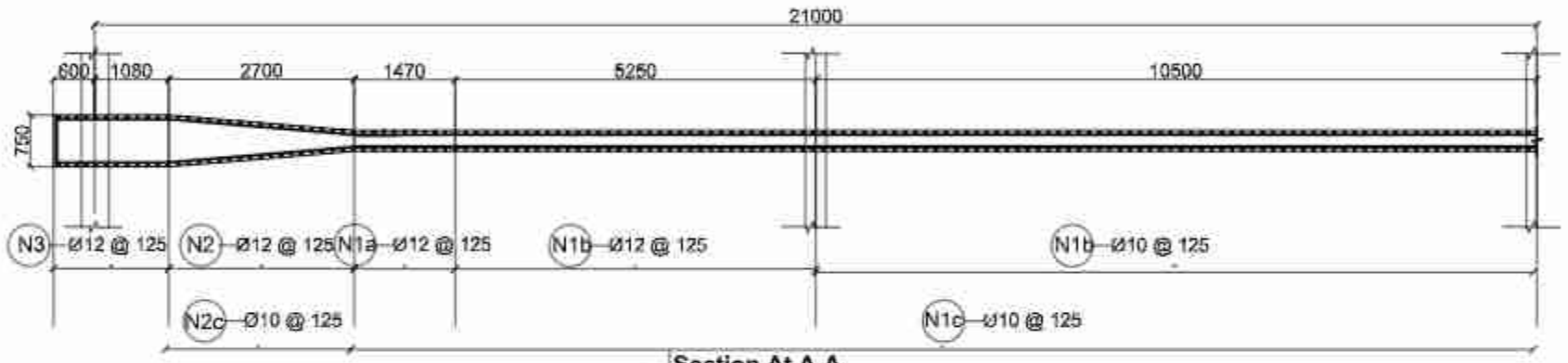

Section At A-A
Scale:-1:100

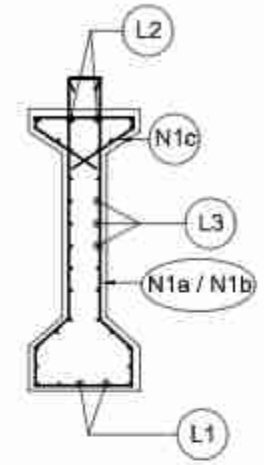

Typical Reinforcement of Precast Girder at Center

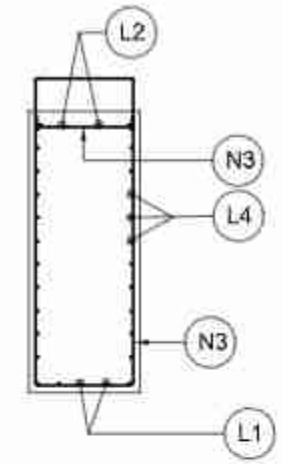

Typical Reinforcement of Precast Girder at End

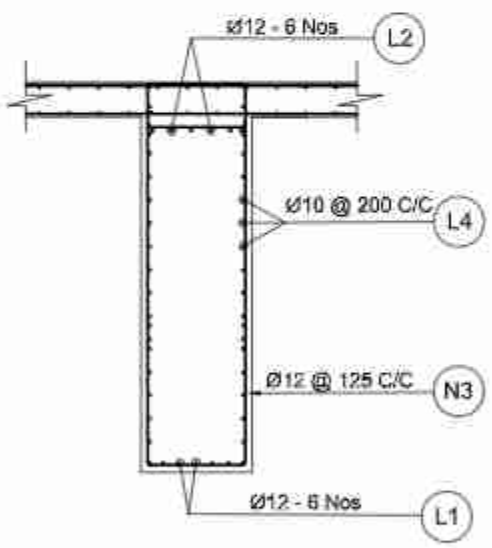

Section At 1-1
Scale:-1:50

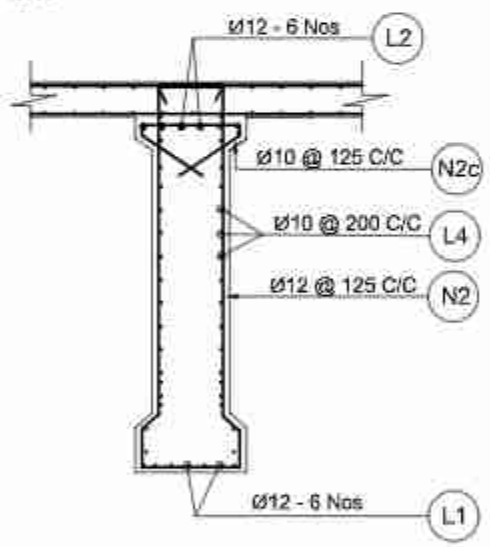

Section At 2-2
Scale:-1:50

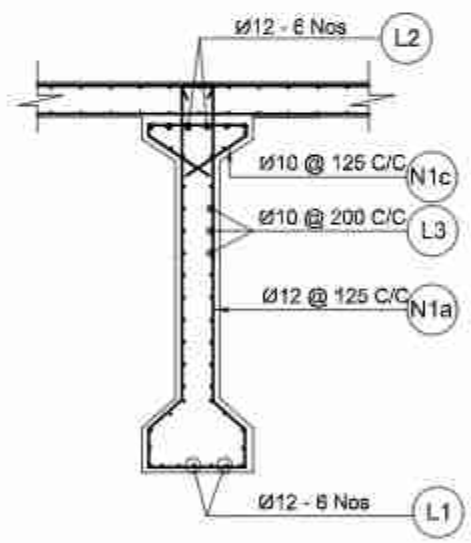

Section At 3-3
Scale:-1:50

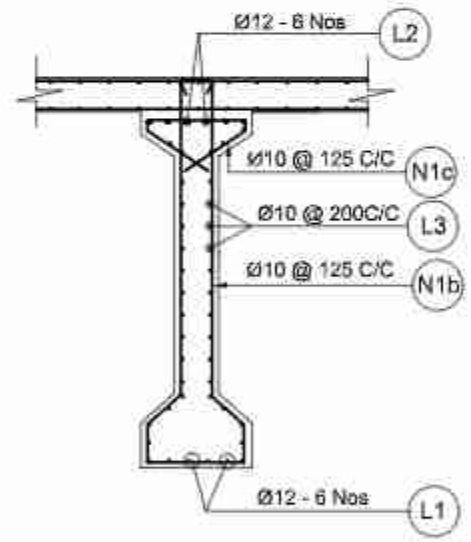

Section At 4-4
Scale:-1:50

NOTE:
The vertical stirrups of the main girder to be tied to the transverse reinforcement of the slab.

Government of Nepal Ministry of Physical Infrastructure and Transport **Department of Roads** **Project Directorate Office (ADB)** **SASEC Highway Improvement Project-** **Project Preparatory Consultant (SHIP-PPC)** **ADB Loan No: 3722-NEP**	**CONSULTANT:** Soosung Engineering Co. Ltd, Korea in association with ERMC P (Ltd), Nepal and Tech Studio of Engineering	**IMPLEMENTING AGENCY:** **DOR, DCID** **ROAD NAME:** **East West Highway (H01)** **Butwal - Gorusinghe Section**	**SHEET TITLE:** Untensioned Reinforcement Details of Girder of Ghamaha Bridge (46/H001/297_A)	**SCALE:** As Shown		**NAME**	**SIGNATURE**	**REV NO.**	**DESCRIPTION**	**DATE:** November,2022
					DESIGNED BY:	Saroj Bhattarai				**DWG.NO.:** 297_Gamaha
					CHECKED BY:	P. Upadhyaya				
					APPROVED BY:	Dr. T.H.Choi				**SHEET NO.:** 11/26

BAR BENDING SCHEDULE OF MAIN GIRDER

BAR ID	SHAPE OF BAR IN mm (NOT TO SCALE)	SPACING (mm)	Ø OF BARS (mm)	NO. OF BARS	LENGTH (m)	WEIGHT/LENGTH (Kg/m)	TOTAL WEIGHT (Kg)
N1a	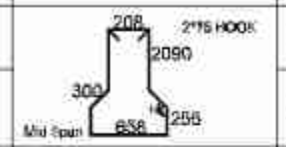	VARIES	12	108	6.510	0.888	624.206
N1b		VARIES	10	168	6.510	0.617	674.298
N1c	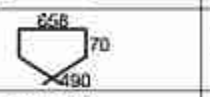	VARIES AS PER N1	10	276	1.780	0.617	302.893
N2	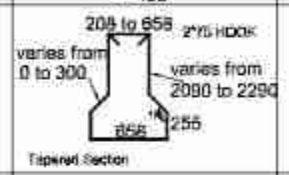	125	12	44	6.860	0.888	267.978
N2C	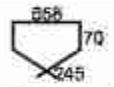	125	10	44	1.290	0.617	34.995
N3		125	12	28	6.540	0.888	162.577
		125	10	28	0.778	0.617	13.431
L1	43120 Hor. Bar at Bottom	132	12	6	43.120	0.888	229.696
L2	43120 100 Hor. Bar at top of Precast Girder	132	12	6	43.120	0.888	229.696
L3	34440 Hor. Bar at Side End Zone	200	10	28	34.440	0.617	594.541
L4	1640 2710 600 850 Hor. Bar at Side (End Zone)	200	10	56	5.800	0.617	193.347
A1	PITCH=60 max	VARIES	16	14	7.930	1.578	175.227
		(Use Manufacturer's specifications if available)					
A2	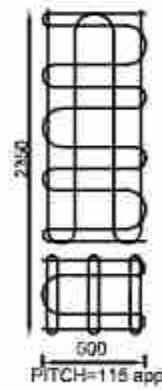 PITCH=115 approx*	150	16	12	26.130	1.576	494.904
		(Use Manufacturer's specifications if available) The Sketch shown here is indicative, for he purpose of estimate only. The pitch of the bars to be adjusted as per the tendon's size and positions					

BAR BENDING SCHEDULE OF MAIN GIRDER

BAR ID	SHAPE OF BAR IN mm (NOT TO SCALE)	SPACING (mm)	Ø OF BARS (mm)	NO. OF BARS	LENGTH (m)	WEIGHT/LENGTH (Kg/m)	TOTAL WEIGHT (Kg)
A3	PITCH=75 both way 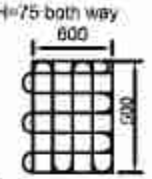 Over Bearing Layers =2	VARIES	10	4	10.200	0.617	25.155
TOTAL IN ONE GIRDER							4022.942
TOTAL IN ONE GIRDER (IN METRIC TON)							4.023

BAR BENDING SCHEDULE OF DECK SLAB

BAR ID	SHAPE OF BAR IN mm (NOT TO SCALE)	SPACING (mm)	Ø OF BARS (mm)	NO. OF BARS	LENGTH (m)	WEIGHT/LENGTH (Kg/m)	TOTAL WEIGHT (Kg)
S1	11670 100	125	12	353	11.870	0.888	3720.047
S2	11670 100	125	12	346	11.870	0.888	3646.279
S2a	100 2470 Additional Bars At left Cantilever	125	12	346	2.570	0.888	789.464
S2b	2470 100 Additional Bars At Right Cantilever	125	12	346	2.570	0.888	789.464
S3	43110 150	MID DECK 200	10	60	43.420	0.617	1606.207
		LEFT CANT. 200	10	6	43.420	0.617	160.621
		RIGHT CANT. 200	10	6	43.420	0.617	160.621
S4	43110 105	200	10	60	43.420	0.617	1606.207
S4a	155 4900 Additional Top Bars At Deck End,Left	200	10	60	5.055	0.617	186.996
S4b	4900 155 Additional Top Bars At Deck End,right	200	10	60	5.055	0.617	186.996
S5a	100 410 200 For extended Deck,Left End	200	10	60	0.710	0.617	21.887
S5b	100 410 200 For extended Deck,Right End	200	10	60	0.710	0.617	21.887
TOTAL EXCLUDING FOOTPATHS KG							12896.677
TOTAL WEIGHT IN METRIC TON							12.897

Government of Nepal Ministry of Physical Infrastructure and Transport **Department of Roads** **Project Directorate Office (ADB)** **SASEC Highway Improvement Project-** **Project Preparatory Consultant (SHIP-PPC)** **ADB Loan No: 3722-NEP**	**CONSULTANT:** Soosung Engineering Co. Ltd, Korea in association with ERMC P (Ltd), Nepal and 3.98°-Tech Studio of Engineering	**IMPLEMENTING AGENCY:** **DOR, DCID** **ROAD NAME:** **East West Highway (H01)** **Butwal - Gorusinghe Section**	**SHEET TITLE:** B.B.S of Slab & Main Girder of Ghamaha Bridge (46/H001/297_A)	**SCALE:** As Shown		**NAME**	**SIGNATURE**	**REV NO.**	**DESCRIPTION**	**DATE:** November,2022 **DWG.NO.:** 297_Gamaha **SHEET NO.:** 12/26
					DESIGNED BY:	Saroj Bhattarai				
					CHECKED BY:	P. Upadhyaya				
					APPROVED BY:	Dr. T.H.Choi				

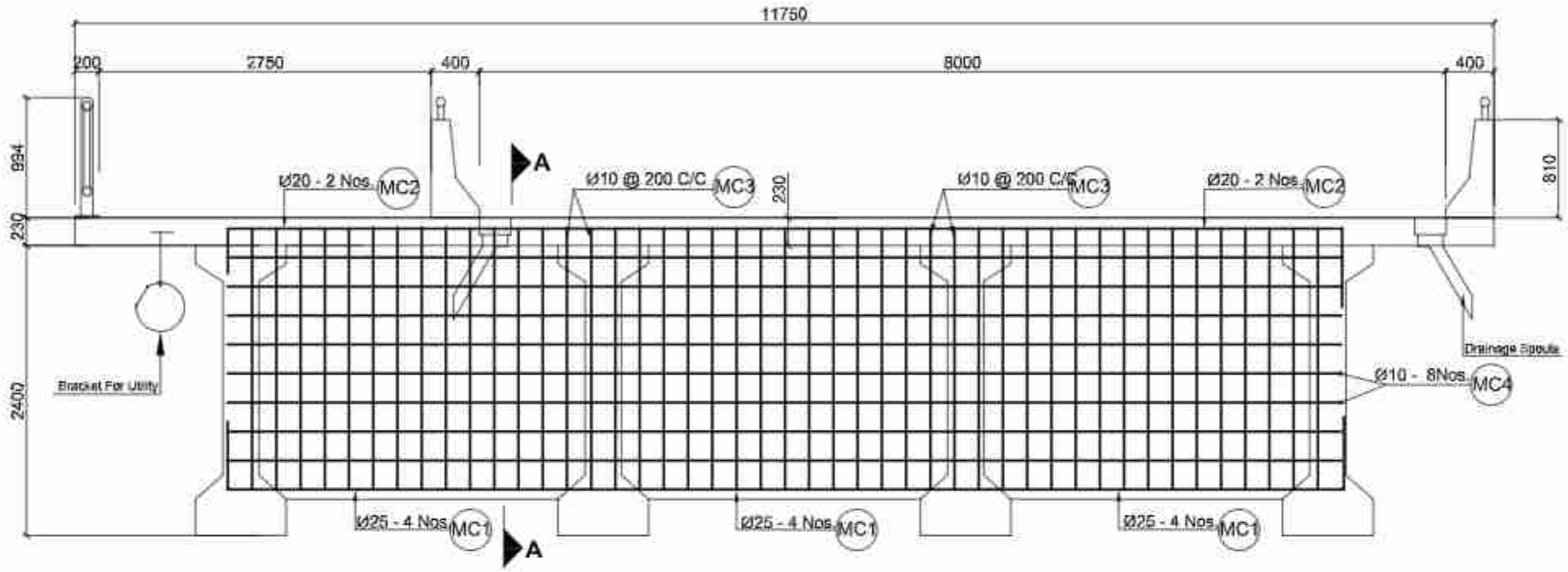

Intermediate Cross Girders
Scale:-1:50

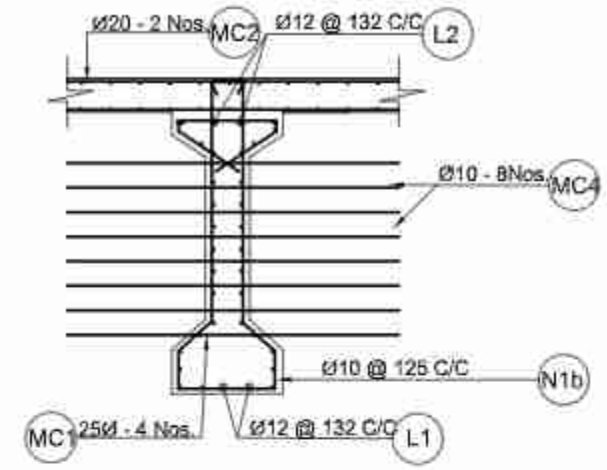

Dowel bar of Intermediate Cross Girder
Scale:-1:50

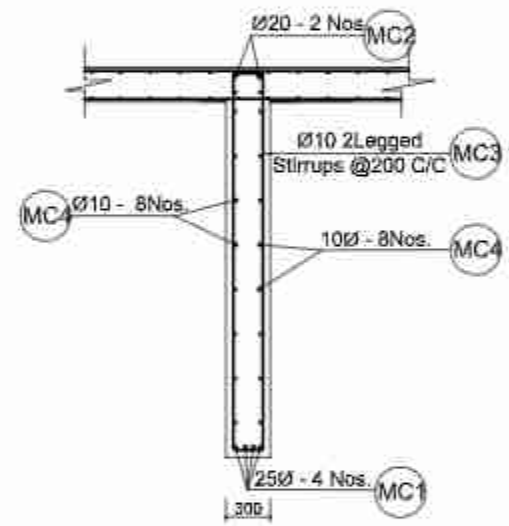

Section At A-A
Scale:-1:50

BAR BENDING SCHEDULE OF INTERMEDIATE CROSS GIRDER

BAR ID	SHAPE OF BAR IN mm (NOT TO SCALE)	SPACING (MM)	Ø OF BARS (mm)	NO. OF BARS	LENGTH (m)	WEIGHT/LENGTH (kG/m)	TOTAL WEIGHT (kG)
MC1	400 400 9645		25	4	10.445	3.853	160.994
MC2	9645 400 400	0	20	2	10.445	2.466	51.518
MC3	2*60MM 2240 210 2 Legged @200MM C/C	200	10	45	5.020	0.617	139.276
MC4	9220 2X6 nos. each face	300	10	16	9.220	0.617	90.952
TOTAL IN ONE GIRDER							442.740
TOTAL GIRDER (IN METRIC TON)				3			1.328

NOTE:
Dowel bars similar to the longitudinal bars of the cross girders shall be pre-installed in the precast main girder before casting. The longitudinal bars of the cross girder shall be lapped to the dowel bars, which shall have a lap length of 60 dia. of the corresponding bars.

Government of Nepal Ministry of Physical Infrastructure and Transport **Department of Roads** **Project Directorate Office (ADB)** **SASEC Highway Improvement Project-** **Project Preparatory Consultant (SHIP-PPC)** **ADB Loan No: 3722-NEP**	**CONSULTANT:** Soosung Engineering Co. Ltd, Korea in association with ERMC P (Ltd), Nepal and -Tech Studio of Engineeering	**IMPLEMENTING AGENCY:** **DOR, DCID** **ROAD NAME:** **East West Highway (H01)** **Butwal - Gorusinghe Section**	**SHEET TITLE:** Reinforcement Details of Intermediate Cross Girder of Ghamaha Bridge (46/H001/297_A)	**SCALE:** As Shown		**NAME**	**SIGNATURE**	**REV NO.**	**DESCRIPTION**	**DATE:** November,2022 **DWG.NO.:** 297_Gamaha **SHEET NO.:** 13/26
					DESIGNED BY:	Saroj Bhattarai				
					CHECKED BY:	P. Upadhyaya				
					APPROVED BY:	Dr. T.H.Choi				

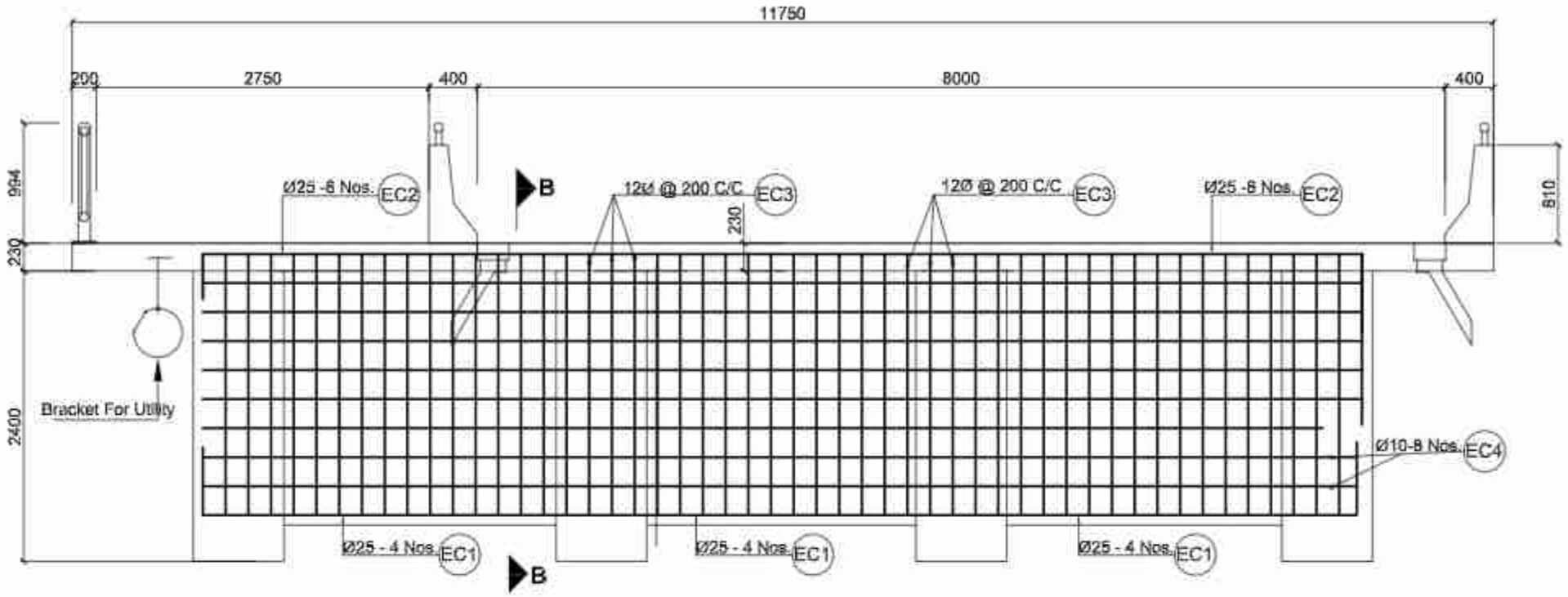

End Cross Girders
Scale:-1:50

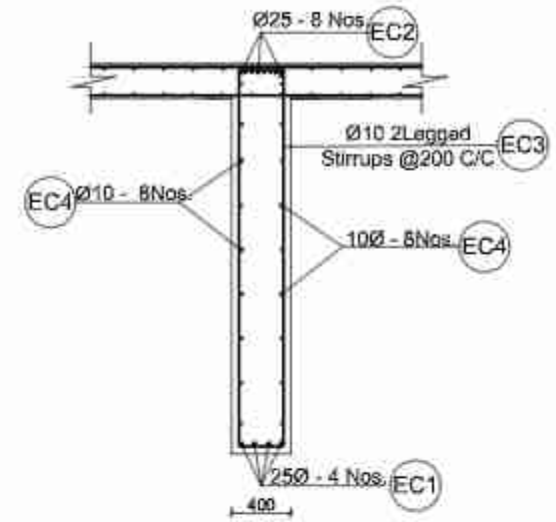

Section At B-B
Scale:-1:50

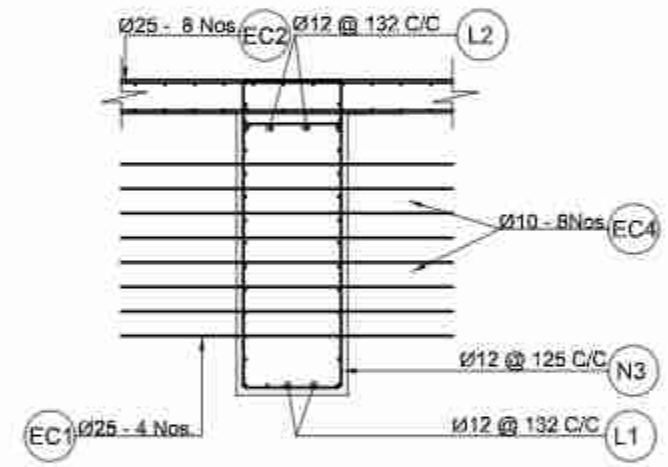

Dowel bar of End Cross Girder
Scale:-1:50

BAR BENDING SCHEDULE OF END CROSS GIRDER

BAR ID	SHAPE OF BAR IN mm (NOT TO SCALE)	SPACING (MM)	Ø OF BARS (mm)	NO. OF BARS	LENGTH (m)	WEIGHT/LENGTH (kG/m)	TOTAL WEIGHT (kG)
EC1	400, 9640, 400		25	4	10.445	3.853	160.994
EC2	400, 9640, 400	0	25	8	10.445	3.853	321.987
EC3	2*60MM, 2238, 310, 2 Legged @200MM C/C	200	12	50	5.242	0.888	232.697
EC4	9320, 2X8 nos. each side	300	10	16	9.320	0.617	91.938
TOTAL IN ONE GIRDER							807.616
TOTAL GIRDER (IN METRIC TON) 2							1.615

NOTE:
Dowel bars similar to the longitudinal bars of the cross girders shall be pre-installed in the precast main girder before casting. The longitudinal bars of the cross girder shall be lapped to the dowel bars, which shall have a lap length of 60 dia. of the corresponding bars.

Government of Nepal Ministry of Physical Infrastructure and Transport **Department of Roads** **Project Directorate Office (ADB)** **SASEC Highway Improvement Project-** **Project Preparatory Consultant (SHIP-PPC)** **ADB Loan No: 3722-NEP**	**CONSULTANT:** Soosung Engineering Co. Ltd, Korea in association with ERMC P (Ltd), Nepal and 3.98°-Tech Studio of Engineering	**IMPLEMENTING AGENCY:** **DOR, DCID** **ROAD NAME:** **East West Highway (H01)** **Butwal - Gorusinghe Section**	**SHEET TITLE:** Reinforcement Details of End Cross Girder of Ghamaha Bridge (46/H001/297_A)	**SCALE:** As Shown		**NAME**	**SIGNATURE**	**REV NO.**	**DESCRIPTION**	**DATE:** November,2022 **DWG.NO.:** 297_Gamaha **SHEET NO.:** 14/26
					DESIGNED BY:	Saroj Bhattarai				
					CHECKED BY:	P. Upadhyaya				
					APPROVED BY:	Dr. T.H.Choi				

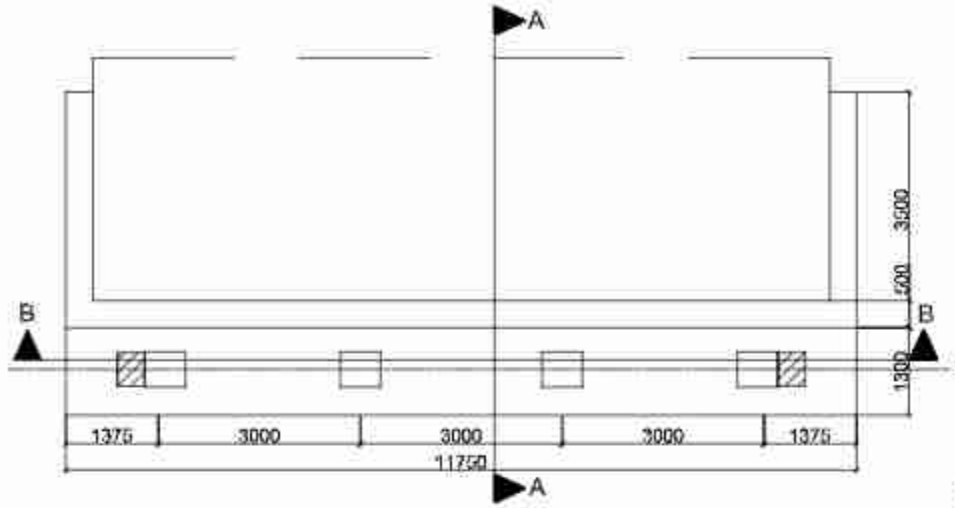

Plan of Abutment
Scale:-1:100

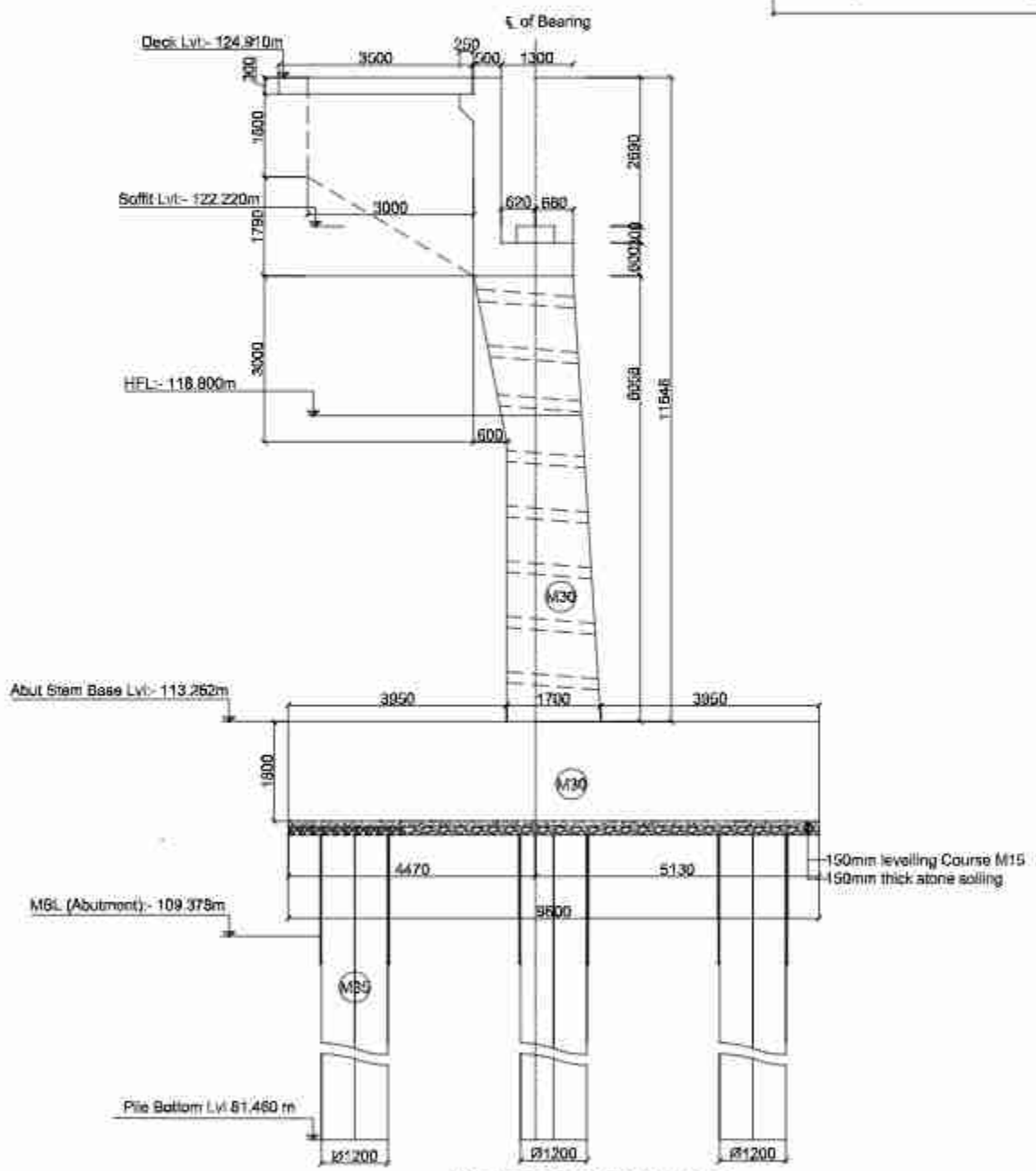

Section of Abutment At (A-A)
Scale:-1:110

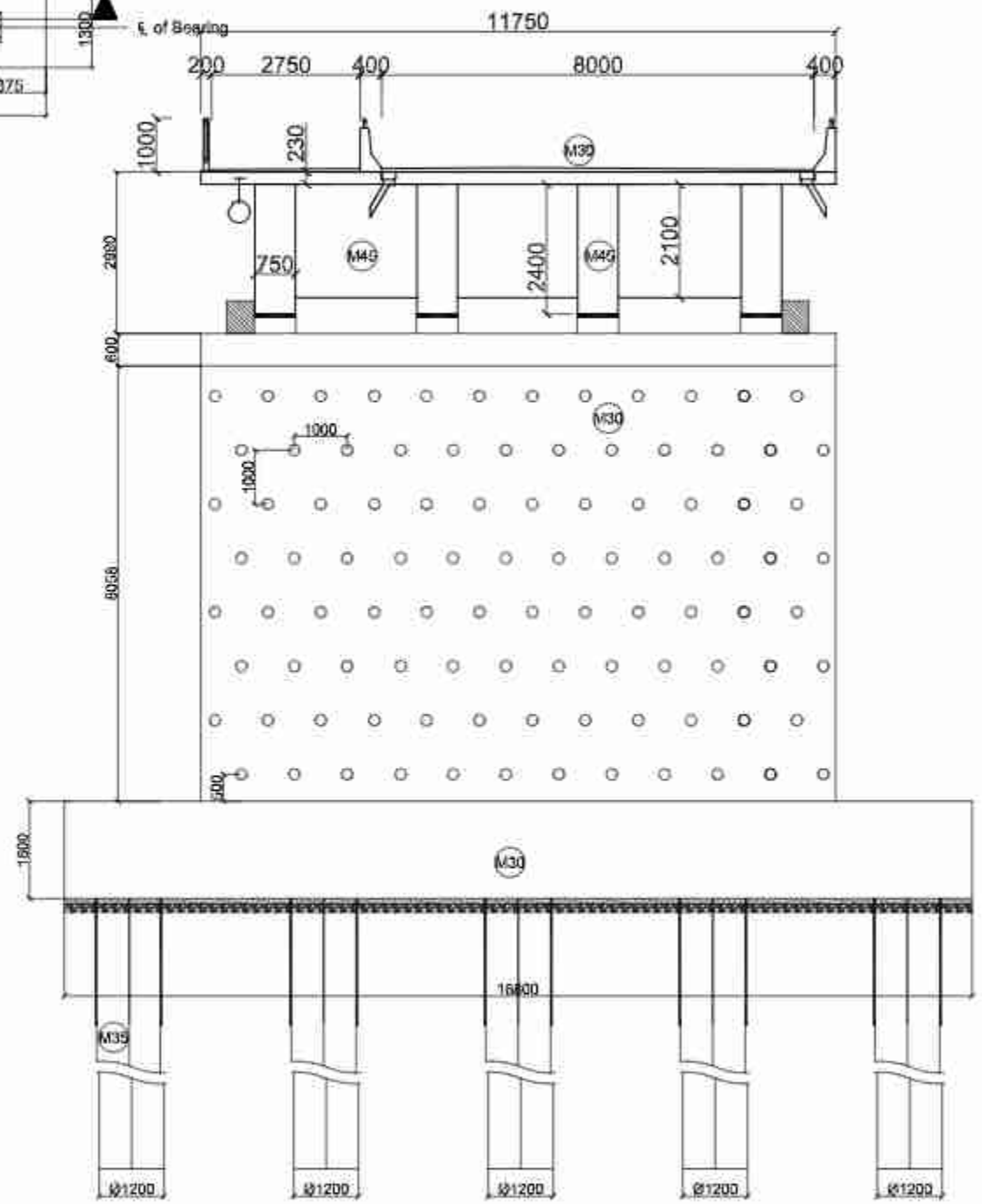

Section Of Abutment At (B-B)
Scale:-1:110

Government of Nepal Ministry of Physical Infrastructure and Transport **Department of Roads** **Project Directorate Office (ADB)** **SASEC Highway Improvement Project-** **Project Preparatory Consultant (SHIP-PPC)** **ADB Loan No: 3722-NEP**	**CONSULTANT:** Soosung Engineering Co. Ltd, Korea in association with ERMC P (Ltd), Nepal and Tech Studio of Engineeering	**IMPLEMENTING AGENCY:** **DOR, DCID** **ROAD NAME:** **East West Highway (H01)** **Butwal - Gorusinghe Section**	**SHEET TITLE:** Abutment Details of Ghamaha Bridge (46/H001/297_A)	**SCALE:** As Shown		**NAME**	**SIGNATURE**	**REV NO.**	**DESCRIPTION**	**DATE:** November,2022 **DWG.NO.:** 297_Gamaha **SHEET NO.:** 15/26
					DESIGNED BY:	Saroj Bhattarai				
					CHECKED BY:	P. Upadhyaya				
					APPROVED BY:	Dr. T.H.Choi				

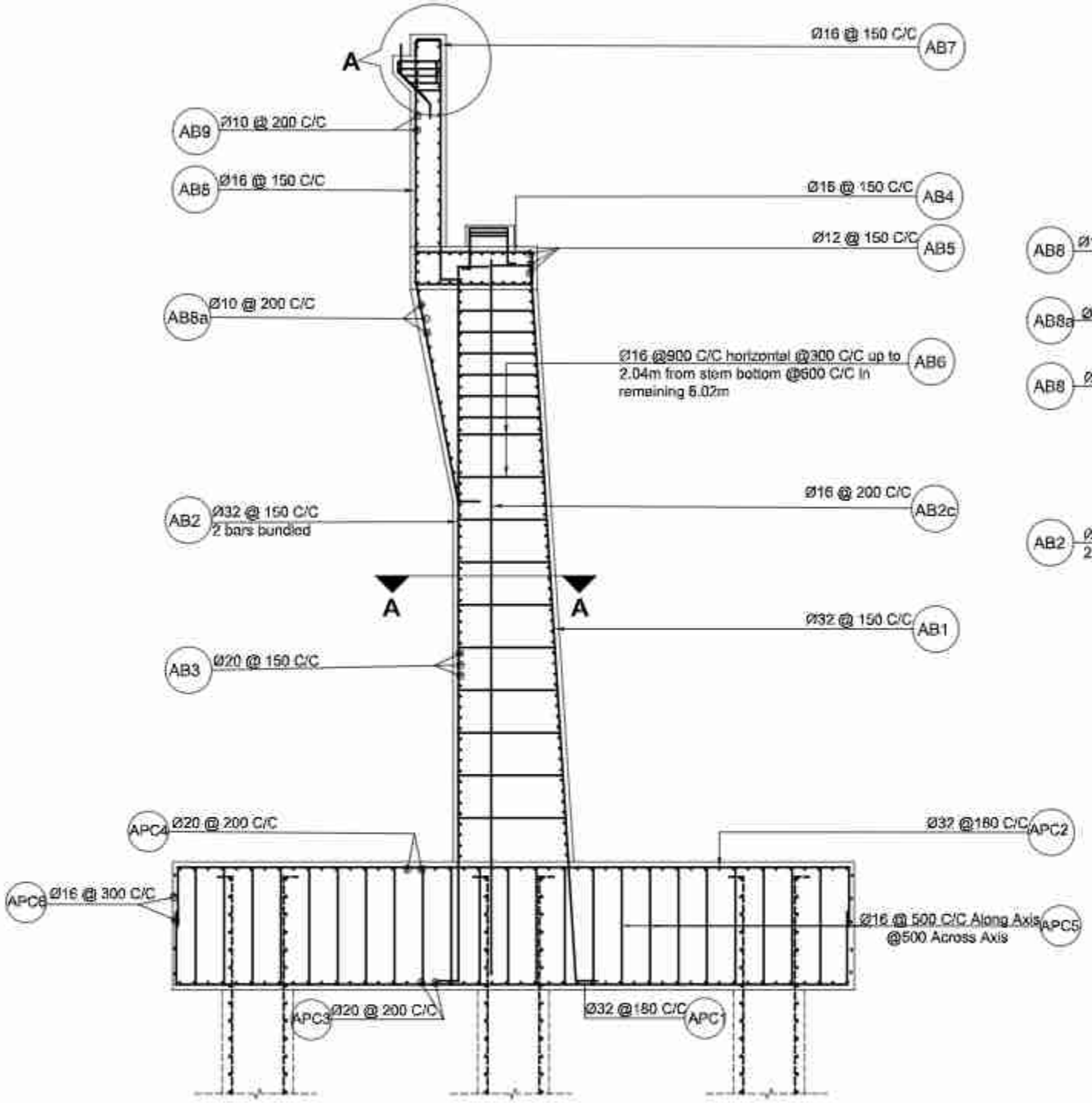

Reinforcement Details of Abutment
Scale:-1:75

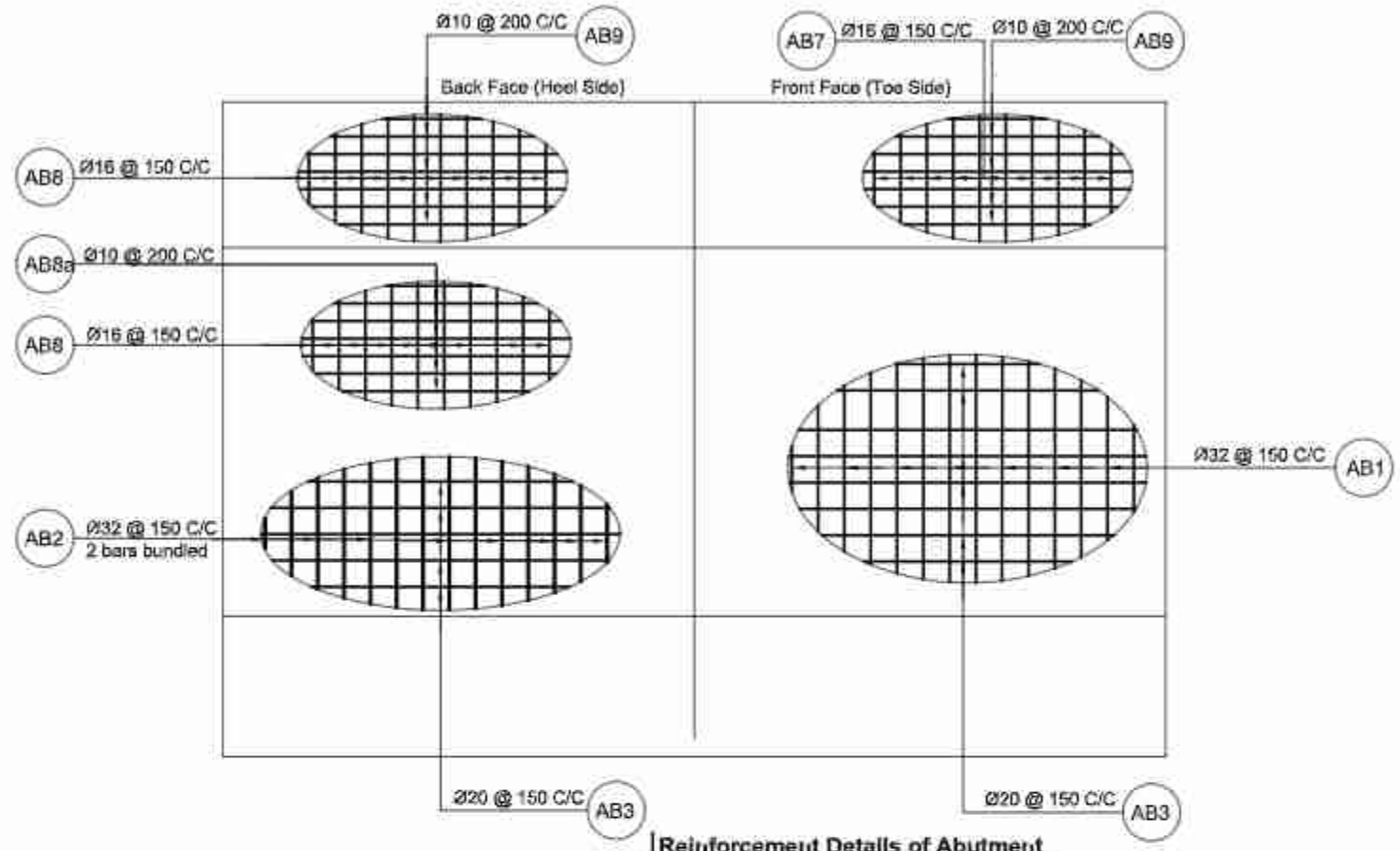

Reinforcement Details of Abutment
Scale:-1:75

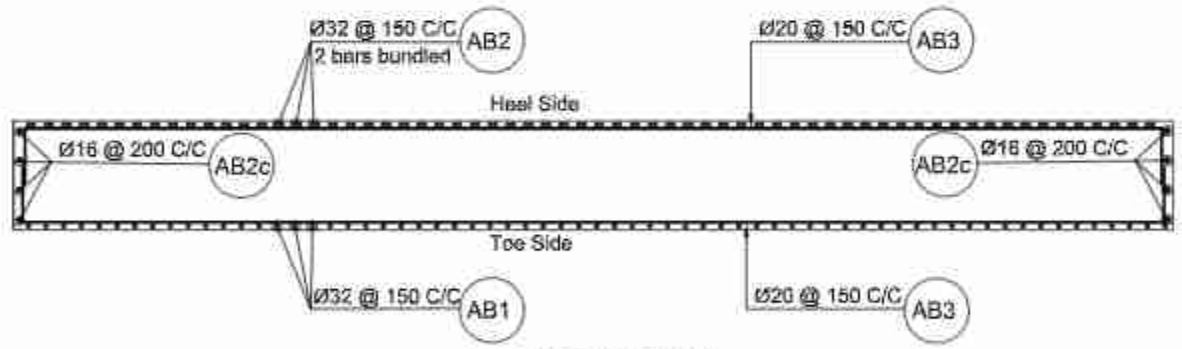

Section at A-A
Scale:-1:75

Government of Nepal Ministry of Physical Infrastructure and Transport **Department of Roads** **Project Directorate Office (ADB)** **SASEC Highway Improvement Project-** **Project Preparatory Consultant (SHIP-PPC)** **ADB Loan No: 3722-NEP**	**CONSULTANT:** Soosung Engineering Co. Ltd, Korea in association with ERMC P (Ltd), Nepal and Tech Studio of Engineering	**IMPLEMENTING AGENCY:** **DOR, DCID** **ROAD NAME:** **East West Highway (H01)** **Butwal - Gorusinghe Section**	**SHEET TITLE:** Reinforcement Details of Abutment of Ghamaha Bridge (46/H001/297_A)	**SCALE:** As Shown		**NAME**	**SIGNATURE**	**REV NO.**	**DESCRIPTION**	**DATE:** November,2022
					DESIGNED BY:	Saroj Bhattarai				**DWG.NO.:** 297_Gamaha
					CHECKED BY:	P. Upadhyaya				
					APPROVED BY:	Dr. T.H.Choi				**SHEET NO.:** 16/26

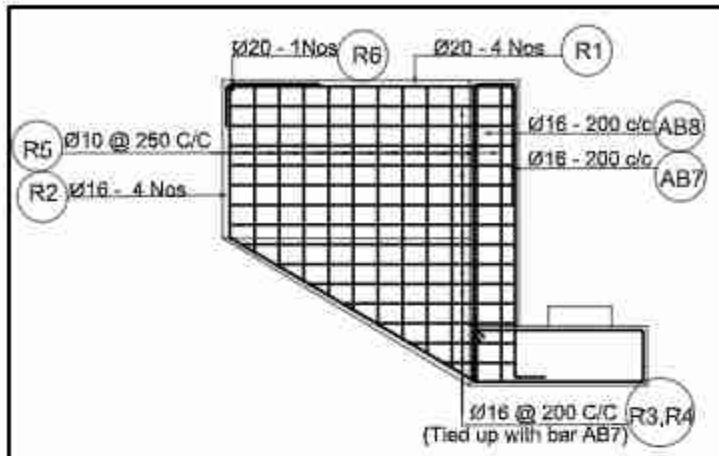

Reinforcement Details of Wingwall
Scale:-1:75

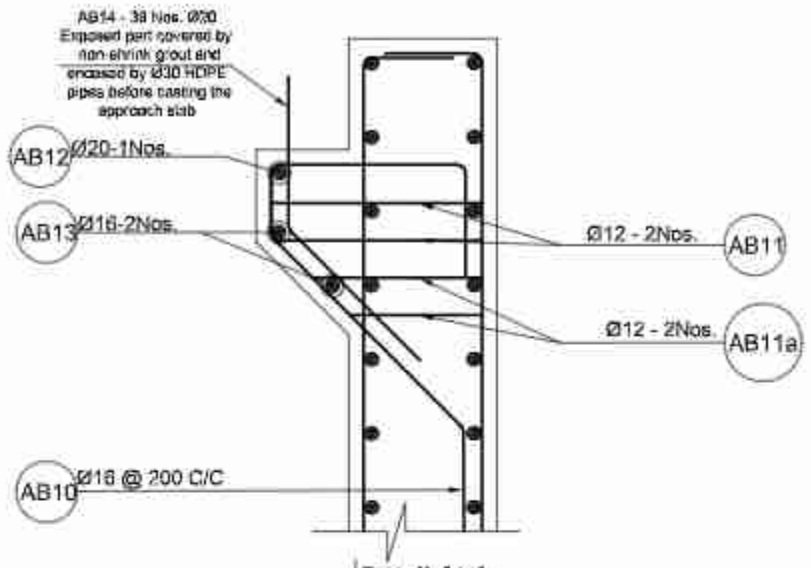

Detail At A
Scale:-1:20

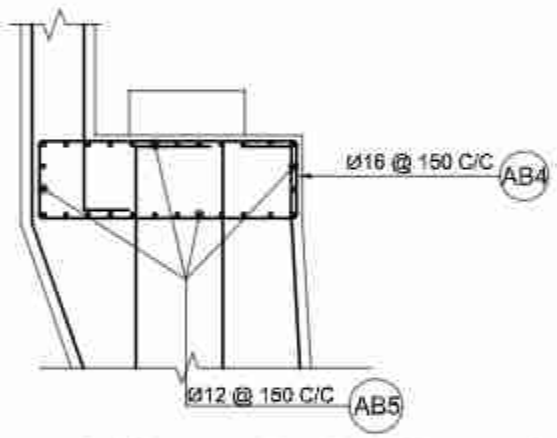

Reinforcement Details Of Abutment Cap
Scale:-1:50

BAR BENDING SCHEDULE FOR WINGWALL

BAR ID	SHAPE OF BAR IN mm (NOT TO SCALE)	SPACING (mm)	Ø OF BARS (mm)	NO. OF BARS	LENGTH (m)	WEIGHT/LENGTH (Kg/m)	TOTAL WEIGHT (Kg)
R1	400 3407 1200	0	20	8	5.007	2.466	98.784
R2	1707 300 3495	0	16	8	5.502	1.578	69.472
R3	214 3314 2*150	200	16	18	7.356	1.578	208.985
R4	214 avg.1600 2*150	200	16	18	3.928	1.578	111.696
R5	162 avg.2695	250	10	26	6.050	0.617	96.982
R6	307	0	20	2	0.307	2.466	1.514
R7	3400	0	10	0	3.400	0.617	0.000
R8	260 350	0	10	0	1.320	0.617	0.000
TOTAL IN 2 WINGWALL IN ONE ABUTMENT							587.332
TOTAL WEIGHT (IN METRIC TON)							0.587

BAR BENDING SCHEDULE OF ABUTMENT

BAR ID	SHAPE OF BAR IN mm (NOT TO SCALE)	SPACING (mm)	Ø OF BARS (mm)	NO. OF BARS	LENGTH (m)	WEIGHT/LENGTH (Kg/m)	TOTAL WEIGHT (Kg)
AB1	300 1720 500	150 mm c/c Approx	32	78	11.090	6.313	5431.636
AB1a	0 0	-	-	-	-	-	-
AB2	100 1920 500	150 mm c/c Approx	32	156	11.250	6.313	11060.248
AB2c	1020 500	At sideface 200 mm c/c	16	16	10.750	1.578	270.969
AB3	avg.1050 11580	150 mm c/c Approx	20	110	25.260	2.466	6892.461
AB4	avg.1630 515 2*100	150 mm c/c Approx	16	80	4.500	1.578	568.202
AB5	11600	150 mm c/c Approx	12	29	11.600	0.888	298.681
AB6	1235-330 Hook Length 180 900 mm C/C horizontal 300 mm C/Cvertical upto 2.04m from stem beyond 600 mm C/C vertical at remaining 6.02 m	16	230	1.733	1.578	642.767	
AB7	350 3590 300	150 mm c/c Approx	16	79	4.240	1.578	528.661
AB8	3515 350 300	150 mm c/c Approx	16	79	7.224	1.578	900.759
AB8a	11600	200 mm c/c Approx	10	17	11.600	0.617	121.581
AB9	11590 335	200 mm c/c Approx	10	16	23.850	0.617	235.271
AB10	130 600 300 747 200	200 mm c/c Approx	16	55	1.947	1.578	168.017
AB11	600 200		12	110	1.000	0.888	97.680
AB11a	300 Average 200		12	110	0.700	0.888	68.362
AB12	11600		20	1	11.600	2.466	28.607
AB13	11600		16	2	11.600	1.578	36.617
AB14	400 600		20	38	0.900	2.466	86.562
TOTAL WEIGHT ABUTMENT KG							27399.075
TOTAL WEIGHT (IN METRIC TON)							27.398

Government of Nepal Ministry of Physical Infrastructure and Transport **Department of Roads** **Project Directorate Office (ADB)** **SASEC Highway Improvement Project-** **Project Preparatory Consultant (SHIP-PPC)** **ADB Loan No: 3722-NEP**	**CONSULTANT:** Soosung Engineering Co. Ltd, Korea in association with ERMC P (Ltd), Nepal and Tech Studio of Engineering	**IMPLEMENTING AGENCY:** **DOR, DCID** **ROAD NAME:** **East West Highway (H01)** **Butwal - Gorusinghe Section**	**SHEET TITLE:** B.B.S of Abutment & wingwall of Ghamaha Bridge (46/H001/297_A)	**SCALE:** As Shown		**NAME**	**SIGNATURE**	**REV NO.**	**DESCRIPTION**	**DATE:** November,2022
					DESIGNED BY:	Saroj Bhattarai				**DWG.NO.:** 297_Gamaha
					CHECKED BY:	P. Upadhyaya				
					APPROVED BY:	Dr. T.H.Choi				**SHEET NO.:** 17/26

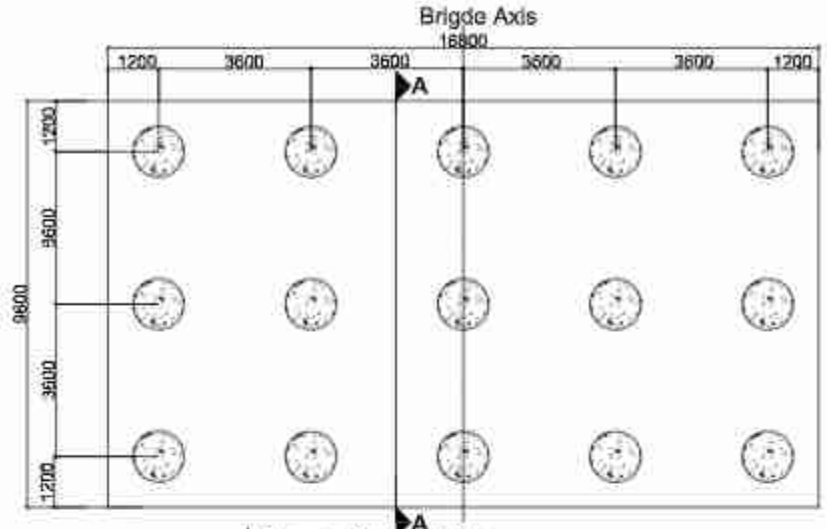

Plan of Abutment Piles
Scale:-1:150

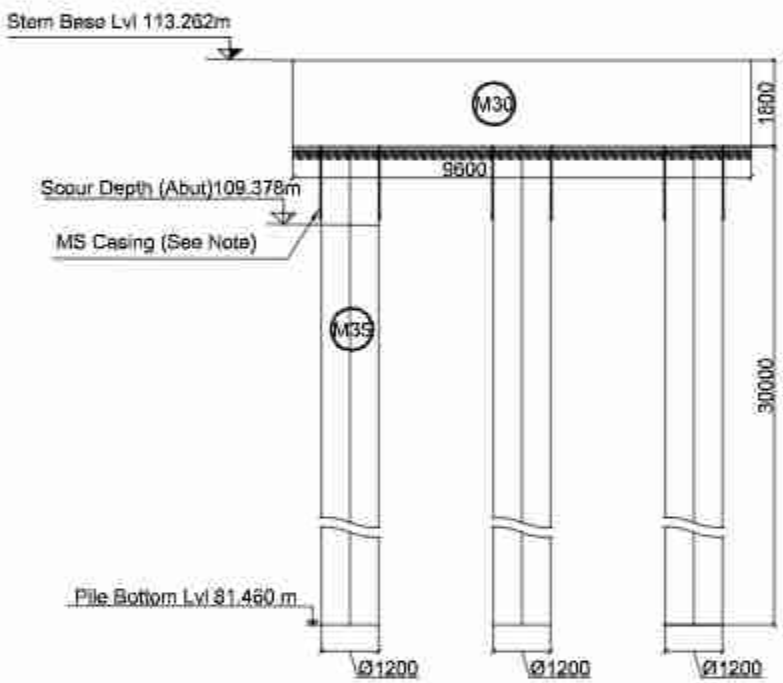

Piles Section At A-A
Scale:-1:150

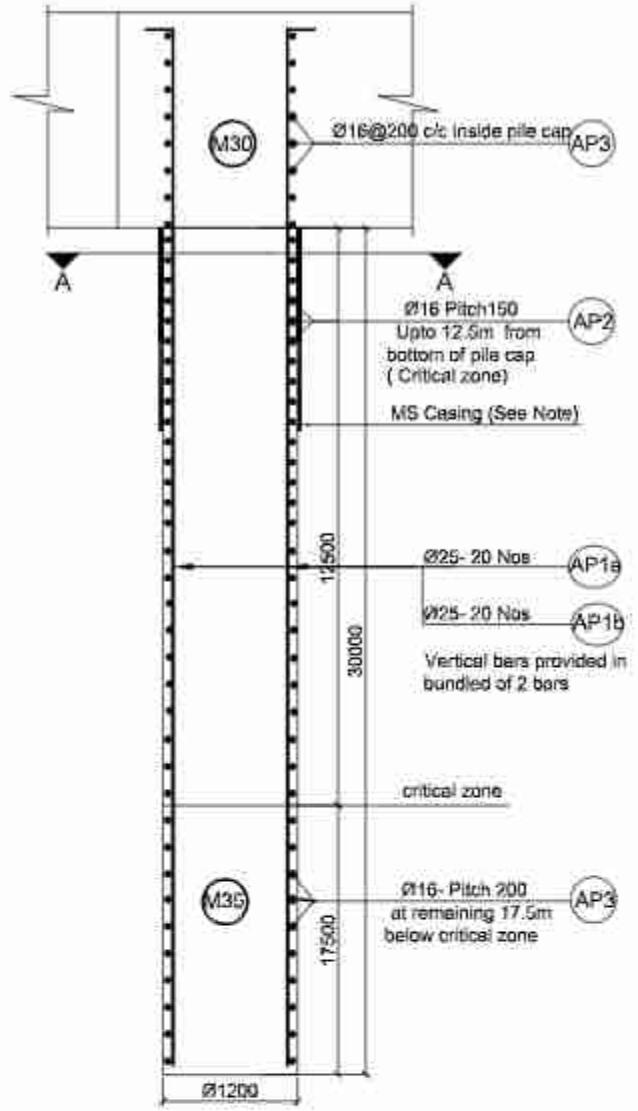

Reinforcement Details of Pile
Scale:-1:50

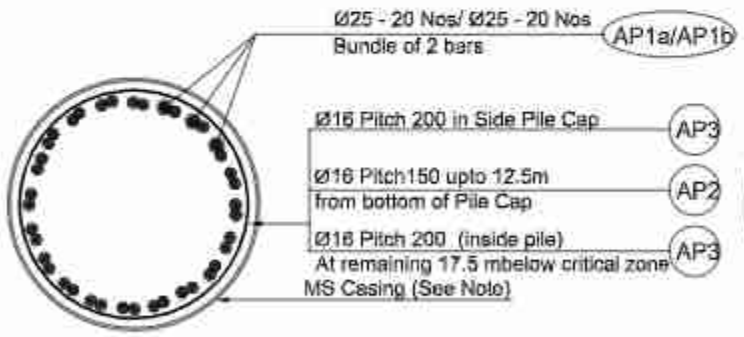

Section at A-A
Scale:-1:30

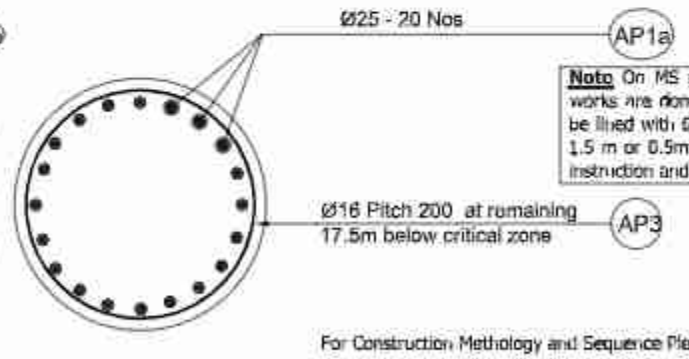

Section at B-B
Scale:-1:30

Note On MS permanent casing on piles: In case piling works are done without temporary casing, the piles shall be lined with 6mm thick MS steel permanent casing up to 1.5 m or 0.5m below MSL whichever is larger (Subject to instruction and approval by the Engineer)

For Construction Methology and Sequence Please See General Notes.

BAR BENDING SCHEDULE FOR ABUTMENT PILES

BAR ID	SHAPE OF BAR IN mm (NOT TO SCALE)	SPACING (mm)	Ø OF BARS (mm)	NO. OF BARS	LENGTH (m)	WEIGHT/LENGTH (Kg/m)	TOTAL WEIGHT (Kg)
AP1a	200 Full Length Bars 31590		25	20	31.790	3.853	2449.972
AP1b	200 Bundled bars 14200		25	20	14.400	3.853	1109.770
AP2	Dia-1034,Pitch-150 12.5m From Bottom of pile cap	150	16	1	273.530	1.578	431.723
AP3	Dia-1034,Pitch-200 inside pile cap 200 Below Critical Zone	200	16	1	317.630	1.578	501.328
TOTAL IN ONE PILE							4492.793
TOTAL (IN METRIC TON)							4.493
TOTAL IN ALL PILES OF ONE ABUTMENT (IN METRIC TON)							67.392

BAR BENDING SCHEDULE FOR ABUTMENT PILECAP

BAR ID	SHAPE OF BAR IN mm (NOT TO SCALE)	SPACING (mm)	Ø OF BARS (mm)	NO. OF BARS	LENGTH (m)	WEIGHT/LENGTH (Kg/m)	TOTAL WEIGHT (Kg)
APC1	9416 1080	150	32	94	11.576	6.313	6871.031
APC2	9416 1080	150	32	94	11.576	6.313	6871.031
APC3	16630 1080	150	20	49	18.790	2.466	2270.614
APC4	16630 1080	150	20	49	18.790	2.466	2270.614
APC5	1570 Curve length = 251 Curve radius = 40 Hook length = 80	0	16	700	2.232	1.578	2465.998
		600 C/C along/500Across Axis					
APC6	8250 16660	300	16	5	52.200	1.578	411.947
TOTAL IN PILE OF ONE ABUTMENT							21161.236
TOTAL WEIGHT (IN METRIC TON)							21.161

Location	Design Pile Length m	Design Working load on pile (non - seismic casse)kn	Allowable Bearing Capacity on pile (Scour case) kn	Allowable Bearing Capacity of the Pile (Non Scour case)kn
Abutment	30	2538	3046	3046
Pier	0	0	0	0

Government of Nepal Ministry of Physical Infrastructure and Transport **Department of Roads** **Project Directorate Office (ADB)** **SASEC Highway Improvement Project-** **Project Preparatory Consultant (SHIP-PPC)** **ADB Loan No: 3722-NEP**	**CONSULTANT:** Soosung Engineering Co. Ltd, Korea in association with ERMC P (Ltd), Nepal and BYF-Tech Studio of Engineering	**IMPLEMENTING AGENCY:** **DOR, DCID** **ROAD NAME:** **East West Highway (H01)** **Butwal - Gorusinghe Section**	**SHEET TITLE:** Reinforcement Details of Abutment Piles of Ghamaha Bridge (46/H001/297_A)	**SCALE:** As Shown		**NAME**	**SIGNATURE**	**REV NO.**	**DESCRIPTION**	**DATE:** November,2022
					DESIGNED BY:	Saroj Bhattarai				**DWG.NO.:** 297_Gamaha
					CHECKED BY:	P. Upadhyaya				
					APPROVED BY:	Dr. T.H.Choi				**SHEET NO.:** 18/26

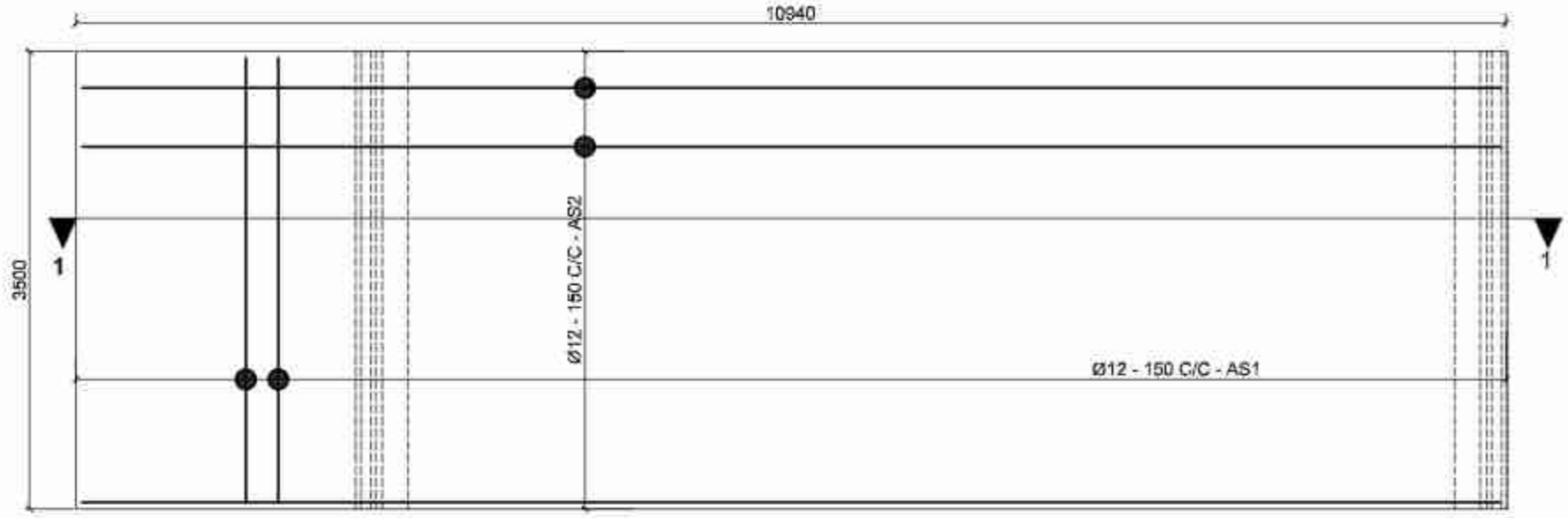

Plan of Reinforcement Details of Approach Slab
Scale:-1:50

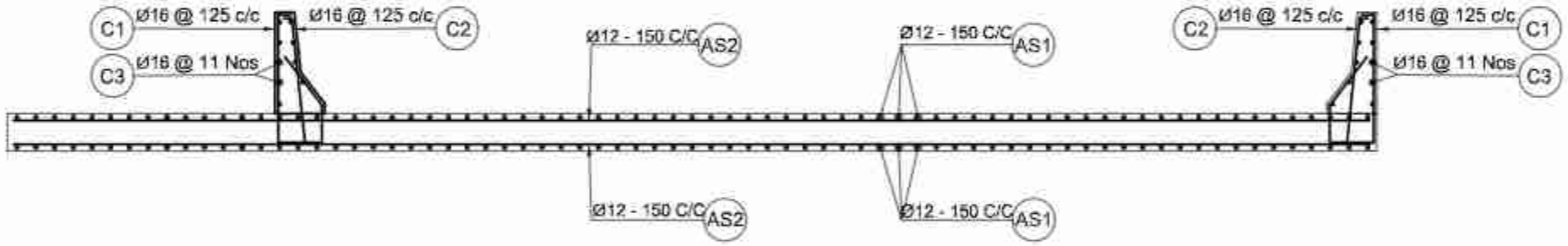

Section at 1-1
Scale:-1:50

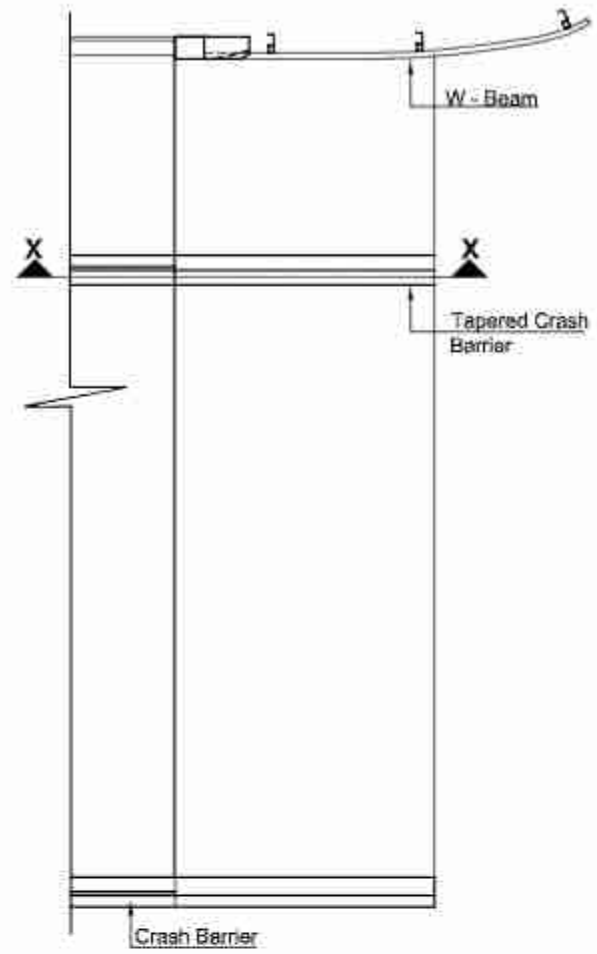

Plan of Approach Slab
Not to Scale

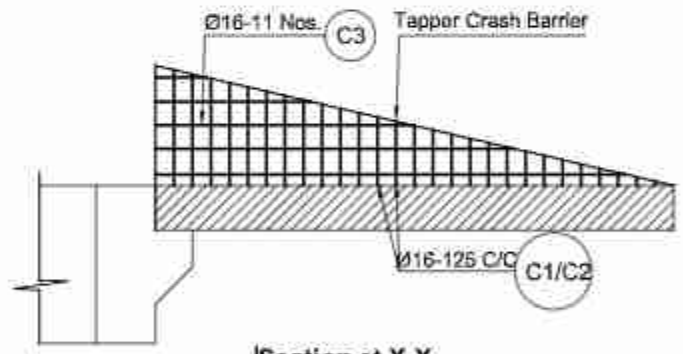

Section at X-X
Not to Scale

BAR BENDING SCHEDULE OF APPROACH SLAB						
BAR ID	SHAPE OF BAR IN mm (NOT TO SCALE)	Ø OF BARS (mm)	NO. OF BARS	LENGTH (m)	WEIGHT/LENGTH (Kg/m)	TOTAL WEIGHT (Kg)
AS1	3400	12	148	3.400	0.888	446.749
AS2	10850	12	48	10.850	0.888	462.375
TOTAL IN ONE APPROACH SLAB						908.124
TOTAL WEIGHT IN METRIC TON						0.909

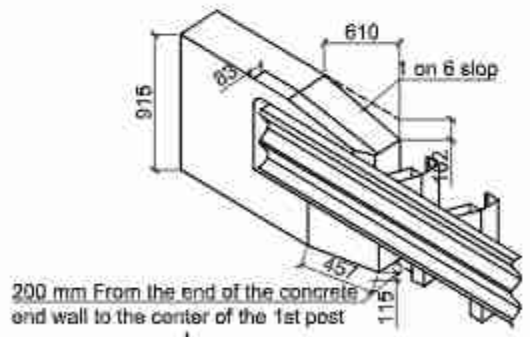

End Block Part Details
Scale:-1:50

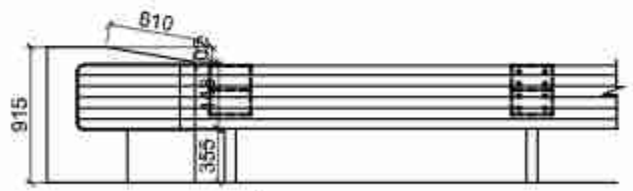

Eleavation
Scale:-1:50

Government of Nepal Ministry of Physical Infrastructure and Transport **Department of Roads** **Project Directorate Office (ADB)** **SASEC Highway Improvement Project-** **Project Preparatory Consultant (SHIP-PPC)** **ADB Loan No: 3722-NEP**	**CONSULTANT:** Soosung Engineering Co. Ltd, Korea in association with ERMC P (Ltd), Nepal and BSE-Tech Studio of Engineeering	**IMPLEMENTING AGENCY:** **DOR, DCID** **ROAD NAME:** **East West Highway (H01)** **Butwal - Gorusinghe Section**	**SHEET TITLE:** Reinforcement Details of Approach Slab of Ghamaha Bridge (46/H001/297_A)	**SCALE:** As Shown		**NAME**	**SIGNATURE**	**REV NO.**	**DESCRIPTION**	**DATE:** November,2022 **DWG.NO.:** 297_Gamaha **SHEET NO.:** 19/26
					DESIGNED BY:	Saroj Bhattarai				
					CHECKED BY:	P. Upadhyaya				
					APPROVED BY:	Dr. T.H.Choi				

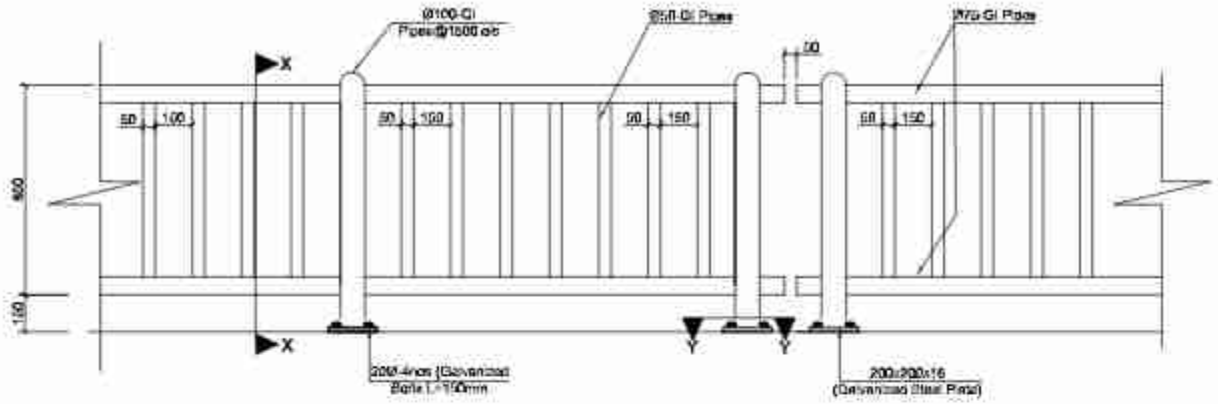

Railing Post Details
Scale:-1:20

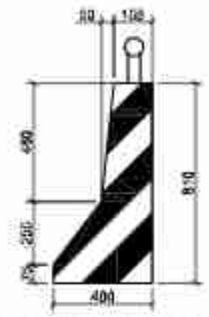

Painting Work on Crash Barrier
Scale:-1:20

Painting Work on Crash Barrier
on The Surface Facing Towards Carriageway
Scale:-1:20

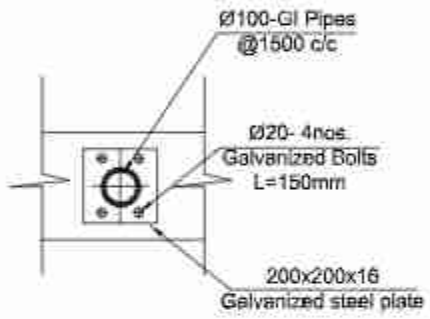

Section at Y-Y
Scale:-1:20

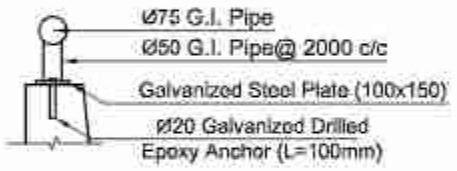

Details at- A-A
Scale:-1:20

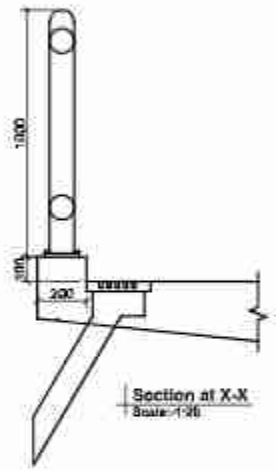

Section at X-X
Scale:-1:20

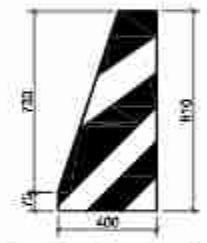

Painting Work on Tapper Crash Barrier
Scale:-1:20

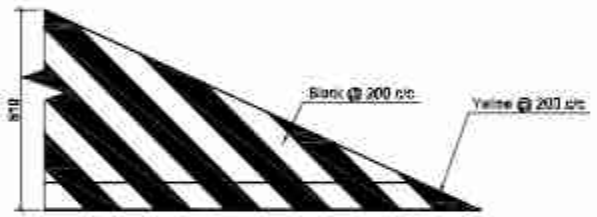

Painting Work on Crash Barrier
on The Surface Facing Towards Carriageway
Scale:-1:20

NOTES:
The crash barrier shall be sloped at both ends of the bridge as shown and the reinforcement shall be adjusted according to the slope.

BAR BENDING SCHEDULE OF CRASH BARRIER (For eatch 1m)

BAR ID	SHAPE OF BAR IN mm (NOT TO SCALE)	SPACING (mm)	Ø OF BARS (mm)	NO. OF BARS	LENGTH (m)	WEIGHT/LENGTH (Kg/m)	TOTAL WEIGHT (Kg)
C1	575, 225, 304, 928	125 Approximate	16	8	2.030	1.578	25.632
C2	500, 915	125 Approximate	16	8	1.415	1.578	17.867
C3	9960		16	11	0.960	1.578	16.667
TOTAL FOR 1 M							60.166
TOTAL FOR 1.0M (IN METRIC TON)							0.060

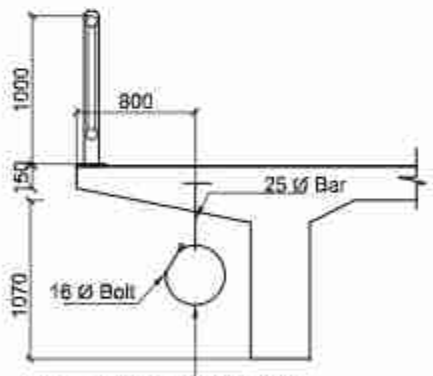

8mm Thick 50 mm Wide Strip
(Diameter of Ring =400mm)
Maximum Load allowed 250 kg/m

Utility hanger Detail
Scale:-1:50

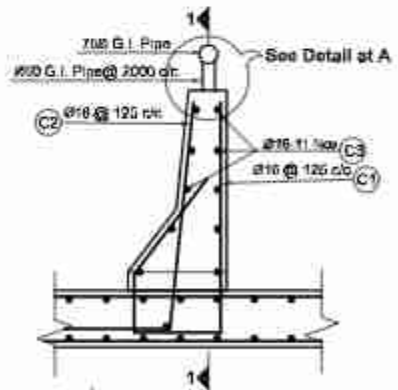

Crash Barrier Detail at The Bridge Deck
Scale:-1:20

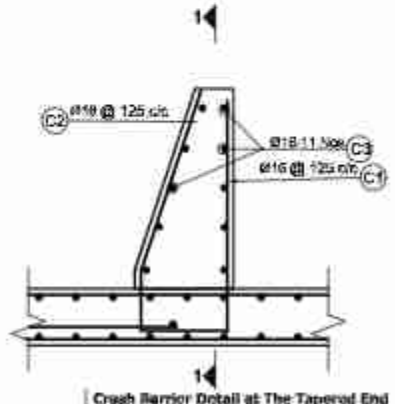

Crash Barrier Detail at The Tapered End
Scale:-1:20

Government of Nepal Ministry of Physical Infrastructure and Transport **Department of Roads** **Project Directorate Office (ADB)** **SASEC Highway Improvement Project-** **Project Preparatory Consultant (SHIP-PPC)** **ADB Loan No: 3722-NEP**	**CONSULTANT:** Soosung Engineering Co. Ltd, Korea in association with ERMC P (Ltd), Nepal and 39F-Tech Studio of Engineeering	**IMPLEMENTING AGENCY:** **DOR, DCID** **ROAD NAME:** **East West Highway (H01)** **Butwal - Gorusinghe Section**	**SHEET TITLE:** Miscellaneous Details-1 of Ghamaha Bridge (46/H001/297_A)	**SCALE:** As Shown		**NAME**	**SIGNATURE**	**REV NO.**	**DESCRIPTION**	**DATE:** November,2022 **DWG.NO.:** 297_Gamaha **SHEET NO.:** 20/26
					DESIGNED BY:	Saroj Bhattarai				
					CHECKED BY:	P. Upadhyaya				
					APPROVED BY:	Dr. T.H.Choi				

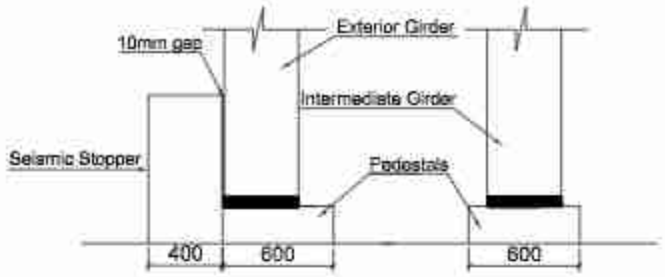

Abutment Cap With Stopper & Pedestal
Scale:-1:40

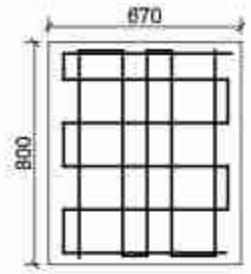

Pedestal Plan
Scale:-1:20

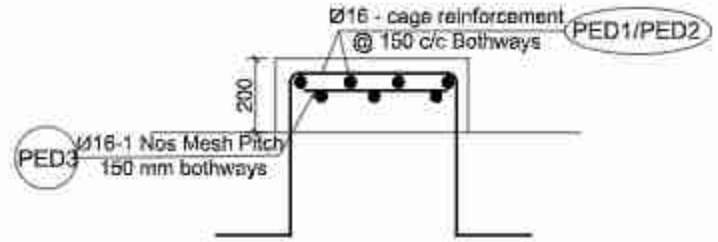

Pedestal Section
Scale:-1:20

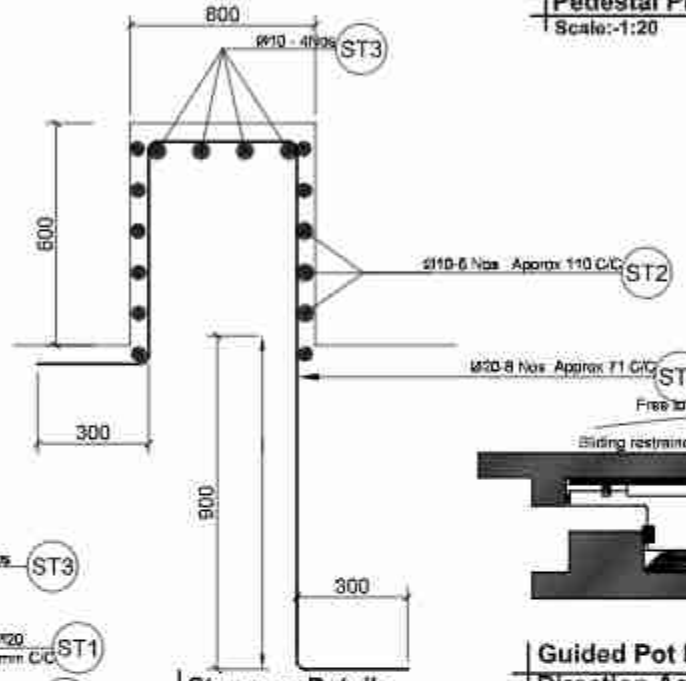

Stoppers Details
Scale:-1:20

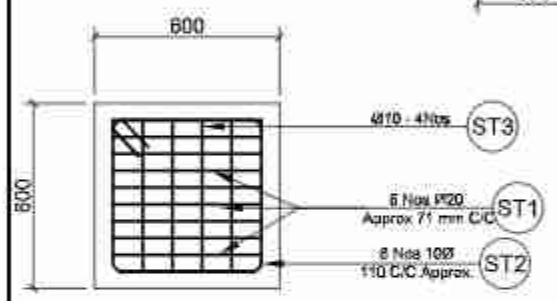

Stoppers Plan
Scale:-1:20

Note
On Pedestal Thickness The thickness
of the pedestal can be suitably adjusted as per
engineer's instruction to retain the height of the ballast wall

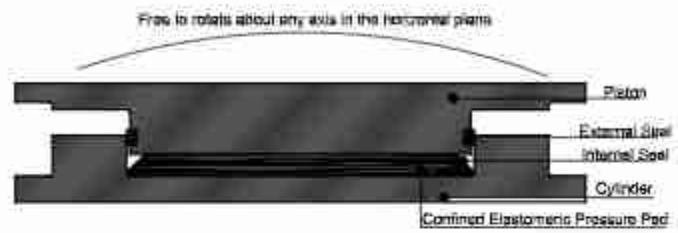

Fixed Pot Bearing As Per IRC : 83 (Part - III) - 2018 Section 2.1.1

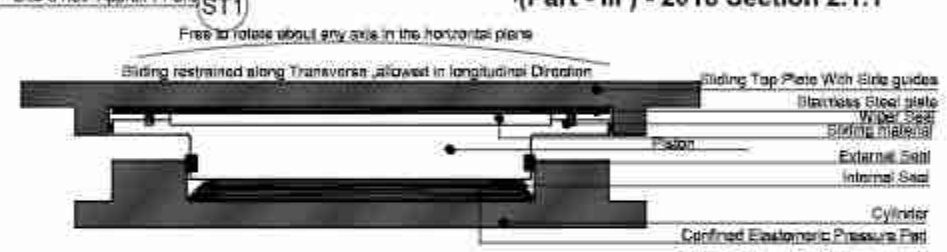

Guided Pot Bearing(For free Bearing) Movement Allowed in to longitudinal Direction As Per IRC : 83 (Part - III) - 2018 Section 2.1.3

Design Data for bearings (POT bearing)

Load Condiadtion	Items		Load / Displacement/ Moment	
			POT Fixed Bearing	POT_PTFE Free Bearing
Under DL only	V, kN	No EQ	1280	1280
		EQ	1446	1446
	HL, kN	No EQ	66	66
		EQ	768	77
	HT, kN	No EQ	0	0
		EQ	346	346
	θ, rad	No EQ	0.000	0.000
		EQ	0.000	0.000
	Δ, mm		N/A	84
Under Maximum Live Load	V, kN	No EQ	1990	1990
		EQ	2258	2258
	HL, kN	No EQ	208	99
		EQ	935	113
	HT, kN	No EQ	0	0
		EQ	497	497
	θ, rad	No EQ	0.0003	0.0003
		EQ	0.0003	0.0003
	Δ, mm		N/A	84

The Contractor Shall Provide and Supply POT - PTFE Bearings
Accoding to Provided load and Deformation.

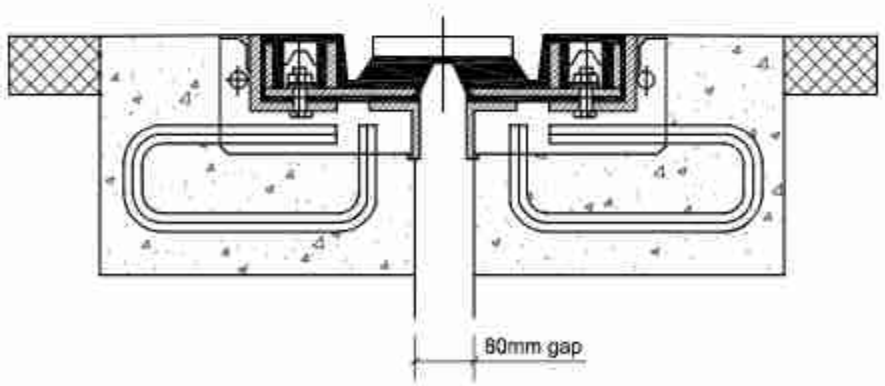

Reinforced Elastomeric Joint
Scale:-1:10

BAR BENDING SCHEDULE OF PEDESTAL

BAR ID	SHAPE OF BAR IN mm (NOT TO SCALE)	SPACING (mm)	Ø OF BARS (mm)	NO. OF BARS	LENGTH (m)	WEIGHT/LENGTH (Kg/m)	TOTAL WEIGHT (Kg)
PED1	720; 920; 200	150	16	6	2.980	1.578	28.359
PED2	590; 920; 200	150	16	6	2.630	1.578	26.800
PED3	704; 574; Pitch 150 bothway, 1 layer	150	16	1	7.540	1.578	11.901
TOTAL BAR BENDING SCHEDULE OF PEDESTAL							67.060
TOTAL WEIGHT (IN METRIC TON)							0.067

BAR BENDING SCHEDULE OF STOPPER

BAR ID	SHAPE OF BAR IN mm (NOT TO SCALE)	SPACING (mm)	Ø OF BARS (mm)	NO. OF BARS	LENGTH (m)	WEIGHT/LENGTH (Kg/m)	TOTAL WEIGHT (Kg)
ST1	500; 900; 1800; 300; 300	80	20	8	3.200	2.466	63.134
ST2	920; 100; 600	110	10	6	2.240	0.617	8.286
ST3	500	0	10	4	0.500	0.617	1.233
TOTAL BAR BENDING SCHEDULE OF STOPPER							72.653
TOTAL WEIGHT (IN METRIC TON)							0.073

Legends:
EQ = Earthquake condition
V = Vertical load
HL = Horizontal force along the bridge axis
HT = Horizontal force transverse to bridge axis
θ = Rotation about transverse axis
Δ = Maximum longitudinal movement allowed

Notes:
Proposed Type of Bearing:- POT-PTFE bearings
1) The POT-Fixed bearings are fixed in position and free to rotate in all directions
2)The POT-PTFE Free bearings are free to rotate in all direction, Free to slide along the the bridge axis and Fixed in position in transverse direction
3) The coefficient of friction, μ for PTFE free bearings is taken as 0.05

Government of Nepal Ministry of Physical Infrastructure and Transport **Department of Roads** **Project Directorate Office (ADB)** **SASEC Highway Improvement Project-** **Project Preparatory Consultant (SHIP-PPC)** **ADB Loan No: 3722-NEP**	**CONSULTANT:** Soosung Engineering Co. Ltd, Korea in association with ERMC P (Ltd), Nepal and Tech Studio of Engineering	**IMPLEMENTING AGENCY:** **DOR, DCID** **ROAD NAME:** **East West Highway (H01)** **Butwal - Gorusinghe Section**	**SHEET TITLE:** Miscellaneous Details-2 of Ghamaha Bridge (46/H001/297_A)	**SCALE:** As Shown		**NAME**	**SIGNATURE**	**REV NO.**	**DESCRIPTION**	**DATE:** November,2022
					DESIGNED BY:	Saroj Bhattarai				**DWG.NO.:** 297_Gamaha
					CHECKED BY:	P. Upadhyaya				
					APPROVED BY:	Dr. T.H.Choi				**SHEET NO.:** 21/26

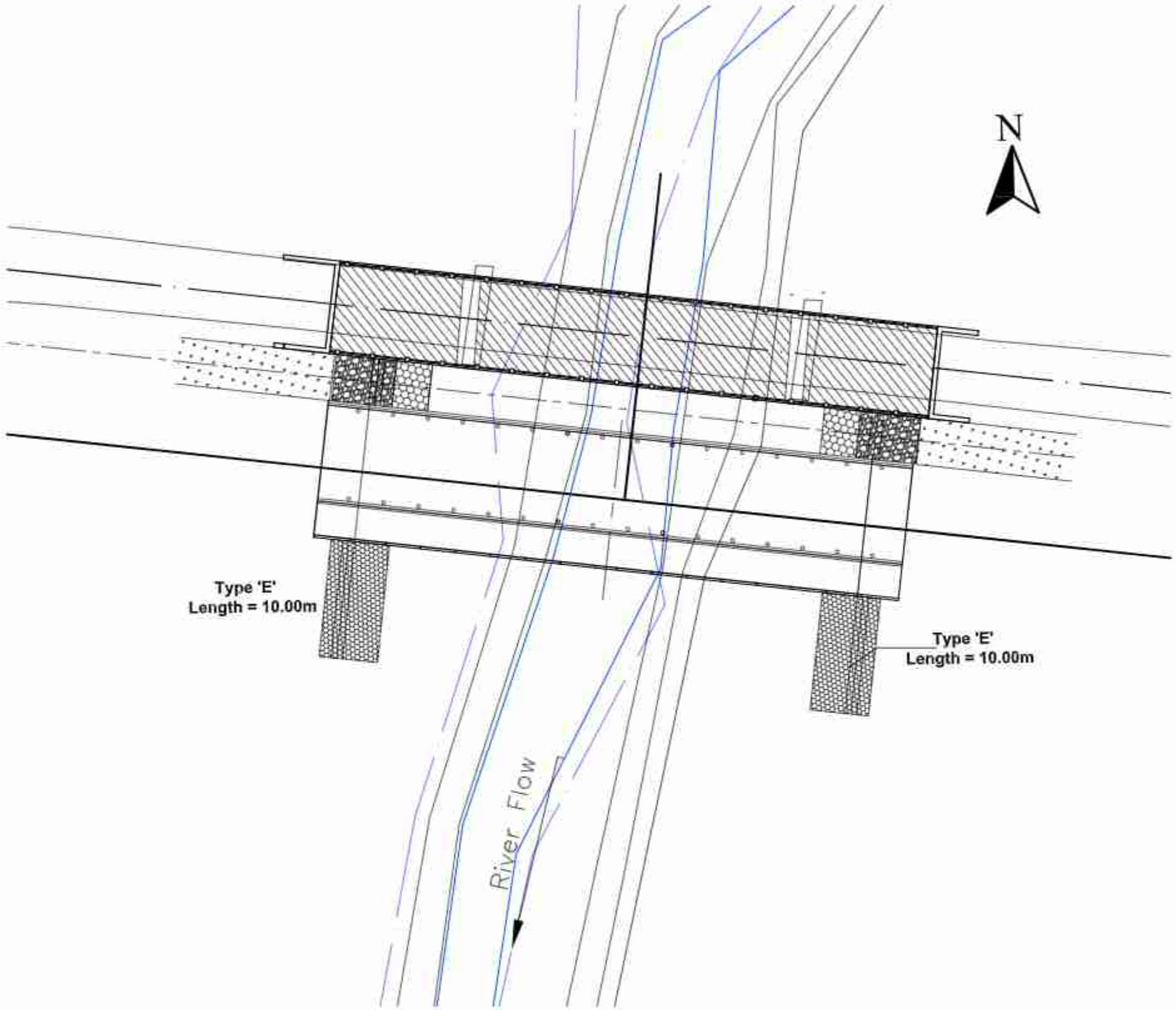

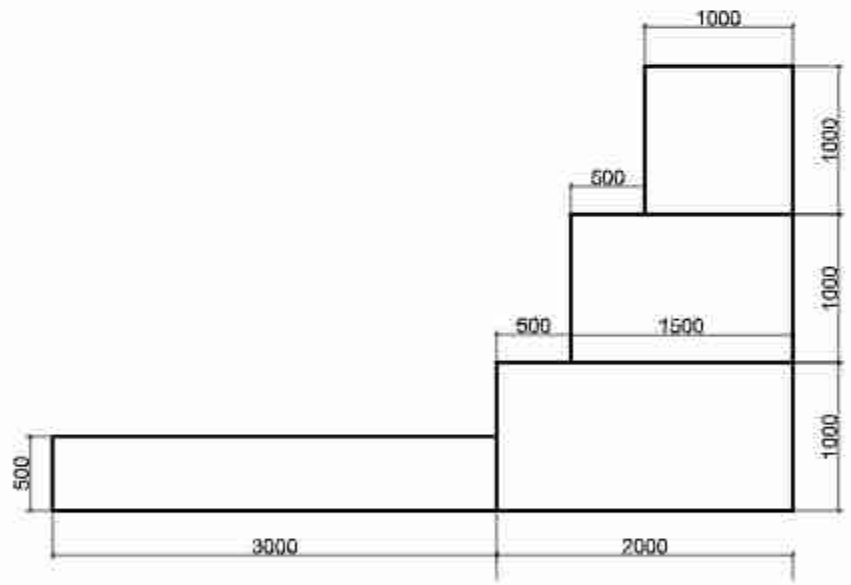

"E" Type River Training Structure
Scale:-1:50

Government of Nepal Ministry of Physical Infrastructure and Transport **Department of Roads** **Project Directorate Office (ADB)** **SASEC Highway Improvement Project-** **Project Preparatory Consultant (SHIP-PPC)** **ADB Loan No: 3722-NEP**	**CONSULTANT:** Soosung Engineering Co. Ltd, Korea in association with ERMC P (Ltd) and JW-Tech Studio of Engineeering Nepal	**IMPLEMENTING AGENCY:** **DOR, DCID** **ROAD NAME:** **East West Highway (H01)** **Butwal - Gorusinghe Section**	**SHEET TITLE:** River Training Work of Ghamaha Bridge (46/H001/297_A)	**SCALE:** As Shown		**NAME**	**SIGNATURE**	**REV NO.**	**DESCRIPTION**	**DATE:** November , 2022 **DWG.NO.:** 297_Gamaha **SHEET NO.:** 22/26
					Designed by:	Saroj Bhattarai				
					Checked by:	P. Upadhyaya				
					Approved by:	Dr. T.H.Choi				

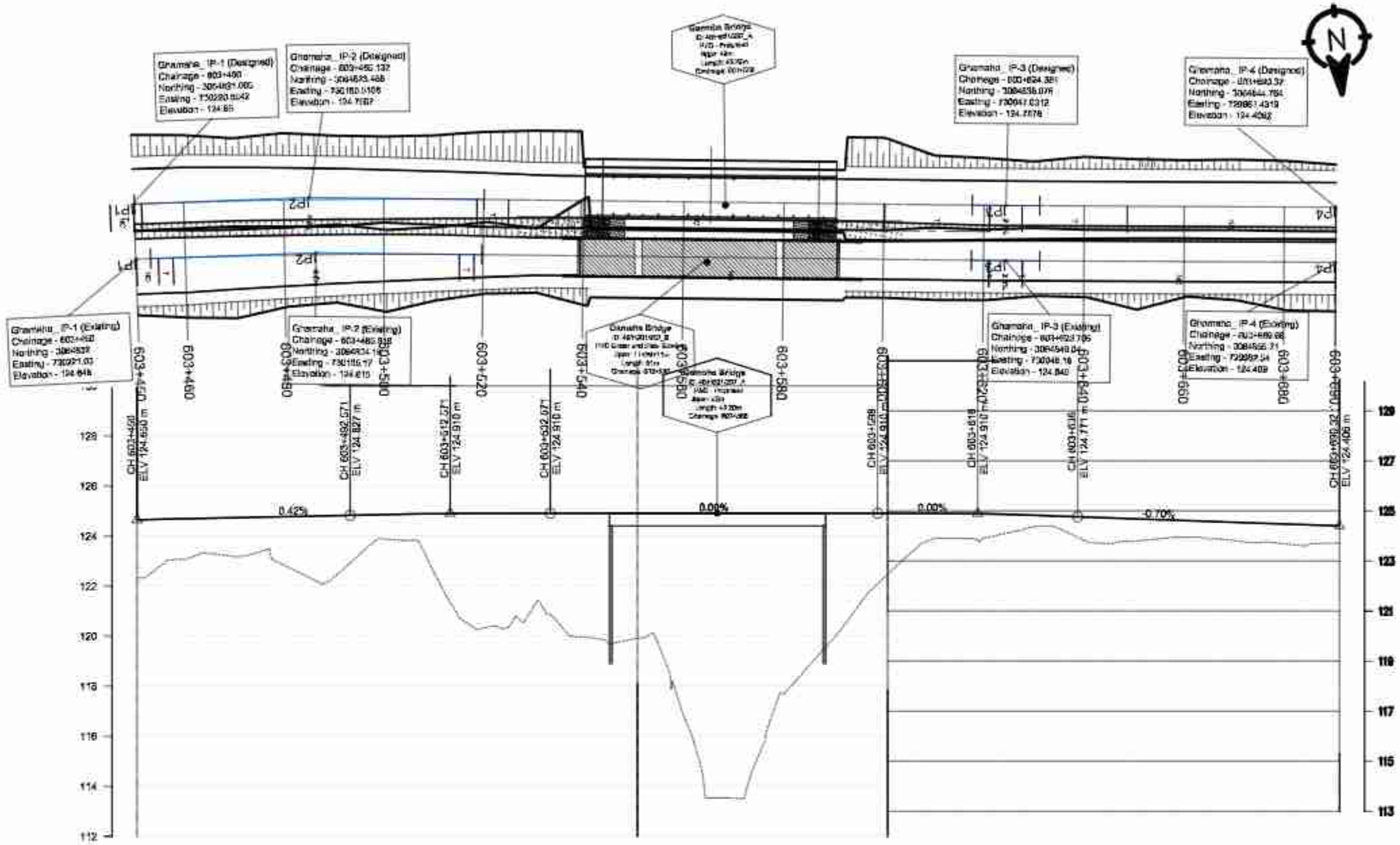

DESIGN LEVEL(m)	124.650	124.692	124.733	124.775	124.816	124.855	124.884	124.902	124.910	124.910	124.910	124.910	124.910	124.910	124.910	124.910	124.897	124.868	124.821	124.757	124.687	124.617	124.548	124.478	124.408
EXISTING LEVEL(m)	122.344	123.092	123.180	122.772	122.471	123.875	122.290	120.357	121.410	119.980	119.913	118.464	113.520	117.853	120.092	122.476	123.912	123.957	124.391	123.764	123.803	123.956	123.801	123.676	123.723
HORIZONTAL ALIGNMENT RIGHT	IP-1 R=0.00			IP-2 R=1400.00															IP-3 R=1994.50						
HORIZONTAL ALIGNMENT LEFT																									
SUPER ELEVATION	T			-2				T				NC				NC	T	2		T			NC		
CHAINAGE(Km)	603+450	603+460	603+470	603+480	603+490	603+500	603+510	603+520	603+530	603+540	603+550	603+560	603+570	603+580	603+590	603+600	603+610	603+620	603+630	603+640	603+650	603+660	603+670	603+680	603+690

Government of Nepal Ministry of Physical Infrastructure and Transport **Department of Roads** **Project Directorate Office (ADB)** **SASEC Highway Improvement Project-** **Project Preparatory Consultant (SHIP-PPC)** **ADB Loan No: 3722-NEP**	**CONSULTANT:** Soosung Engineering Co. Ltd, Korea in association with ERMC P (Ltd), Nepal and TSE-Tech Studio of Engineeering	**IMPLEMENTING AGENCY:** **DOR, DCID** **ROAD NAME:** **East West Highway (H01)** **Butwal - Gorusinghe Section**	**SHEET TITLE:** Plan & Profile OF Ghamaha Bridge 603+450 - 603+690	**SCALE:** 0 2 4 8m Vertical Scale 0 10 20 30m Horizontal Scale		**NAME**	**SIGNATURE**	**REV NO.**	**DESCRIPTION**
					DESIGNED BY:	S.B. Shrestha			
					CHECKED BY:	P. Upadhyaya			
					APPROVED BY:	Dr. T.H.Choi			

DATE: November,2022

DWG.NO.: 297_Ghamaha

SHEET NO.: 23/26