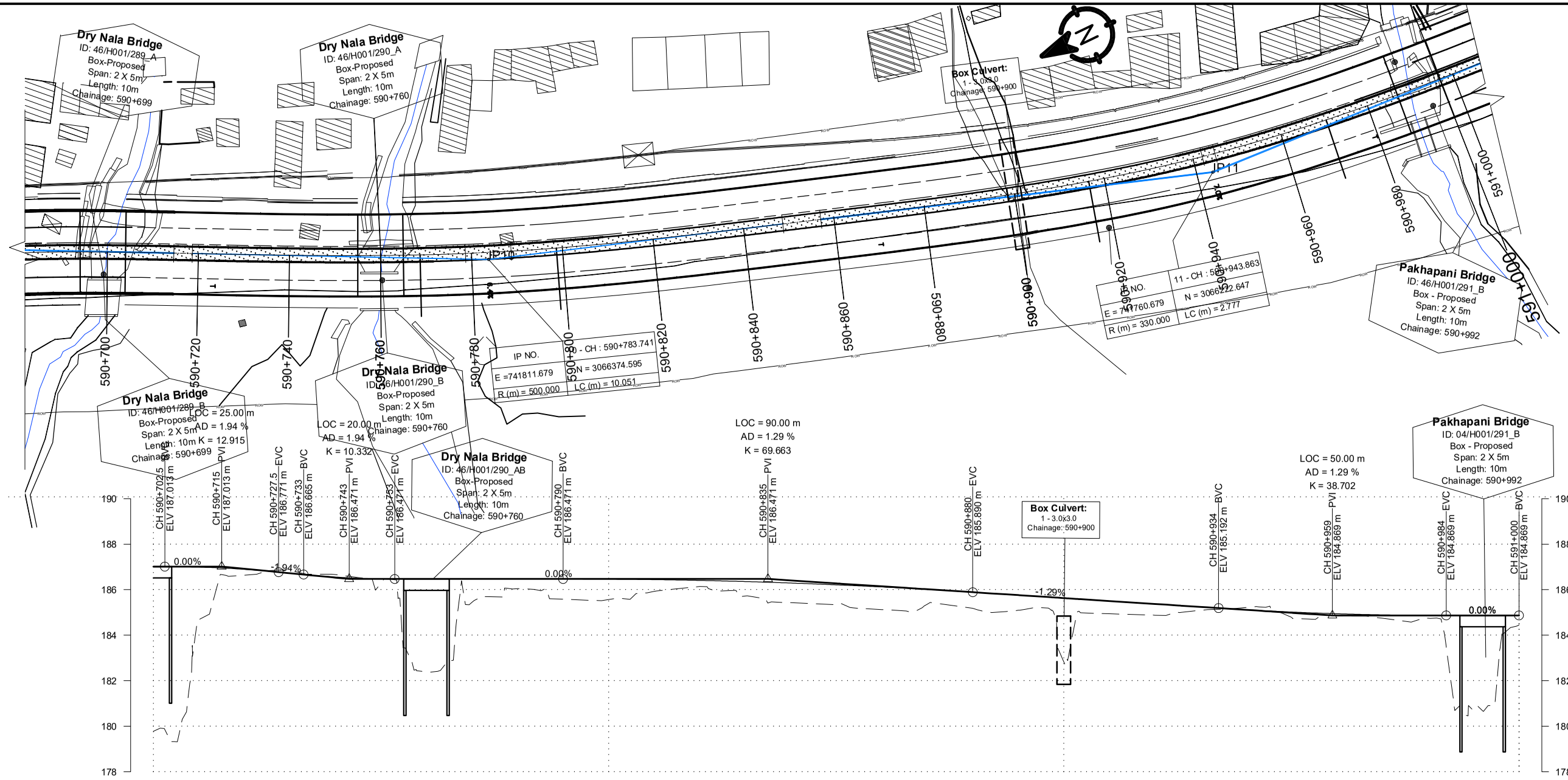

Government of Nepal Ministry of Physical Infrastructure and Transport **Department of Roads** **Project Directorate Office (ADB)** **SASEC Highway Improvement Project-** **Project Preparatory Consultant (SHIP-PPC)** **ADB Loan No: 3722-NEP**	**CONSULTANT:** Soosung Engineering Co. Ltd, Korea in association with ERMC P (Ltd), Nepal and IE-Tech Studio of Engineeering	**IMPLEMENTING AGENCY:** **DOR, DCID** **ROAD NAME:** **East West Highway (H01)** Butwal - Gorusinghe Section	**SHEET TITLE:** Plan And Profile of Pakhapani Box Bridge CH:590+700 - CH:591+000	**SCALE:** 0 2 4 6m Vertical Scale 0 10 20 30m Horizontal Scale		**NAME**	**SIGNATURE**	**REV NO.**	**DESCRIPTION**
					DESIGNED BY:	S.B. Shrestha			
					CHECKED BY:	P. Upadhyaya			
					APPROVED BY:	Dr. T.H.Choi			

DATE: September, 2022

DWG.NO.: 291_Pakhapani

SHEET NO.: 09/09

Government of Nepal

Ministry of Physical Infrastructure and Transport

Department of Roads

Project Directorate (ADB)

Implementing Agency : DOR, DCID

Project Preparatory Consultants

Under

SASEC Highway Improvement Project (SHIP-PPC)

(ADB Loan No: 3722 Nep)

Contract No. SHIP/PPC/2020/02

Satgadi-1. Bridge(46-H001-292_A)

St. Ch : 596+059.375 ~ End Ch :596+127.555

Detailed Drawing

Butwal - Gorusinghe Sector

November,2022

CONTENTS

S.No.	DESCRIPTION	DWG. NO	NO. OF SHEETS
1.	General Notes.	1 - 2	2
3.	Topographic Map.	2.1	1
2.	General Arrangement.	3-4	2
4.	Bore Logs.	5	1
5.	Detail of Superstructure.	6	1
6.	Reinforcement Details of Slab.	7	1
7.	Reinforcement Details of Main Girder .	8	1
8.	Reinforcement Details of Cross Girder.	9	1
9.	B.B.S of Slab & Main Girder .	10	1
10.	Plan of Abutment.	11	1
11.	Reinforcement Details of Abutment.	12	1
12.	Bar Bending Schedule of Abutment.	13	1
13.	Reinforcement Details of Abutment Piles.	14	1
14.	Plan of Pier.	15	1
15.	Reinforcement Details of Pier.	16	1
16.	Bar Bending Schedule of Pier.	17	1
17.	Reinforcement Details of Pier Piles.	18	1
18.	Reinforcement Details of Approach Slab.	19	1
19.	Miscellaneous Details.	20-21	2
20.	River Training Work.	22	1
21.	Plan & Profile.	23-26	4
22.	Cross Section.	26.1-26.3	2
23.	Layout Plan.	27-28	2

GENERAL NOTES

General

- Metric system of measurement is used in all drawings. Elevation and Stations are shown in Meter and all other dimensions are in Millimeters, except indicated otherwise.
- In case of contradictions, specific notes on respective sheet shall supersede the General Notes
- No dimensions shall be scaled from the drawings. Only written dimensions shall be followed. Any doubtful matter in the drawings shall be brought to the attention of the engineer-in-charge for any corrections before the execution of the works.

Design Notes

The design codes followed:
For RCC and PSC concrete - IRC:112-2020
For loads and stresses - IRC:6-2017
For substructure and foundations - IRC:78-2014
For seismic design - IRC:SP:114-2018. Seismic zone V. Importance factor 1.2

Design live loads:

For urban area bridges
Case 1 - 3 lanes of class A + pedestrians; 1 lane of class A + 1 lane of class 70R + pedestrians
Case 2 - 4 lanes or class A; 2 lanes of class A + 1 lane of class 70R. No pedestrians

For non-urban area bridges
Case 1 - 2 lanes of class A + pedestrians; 1 lane of class 70R + pedestrians
Case 2 - 3 lanes of class A; 1 lane of class A + 1 lane of class 70R. No pedestrians.

Notes on Concrete

In General the grade of concrete to be used shall be as follows:
(**unless otherwise specified in the respective drawing sheets**)

For superstructure deck slab, wearing course, crash barriers:	M30
For raised footpaths:	M25
For main girders and cross girders of superstructure with PSC girders:	M45
For main girders and cross girders of superstructure with RCC girders:	M30
For substructure: Abutment stem, ballast wall, stoppers, bearing pedestals, pier cap, pier stem and pile caps:	M30
For bored and cast in situ piles:	M35
For leveling course:	M15

The maximum size of aggregate shall be as per IRC:112-2020, clause 18.4.4.2

Admixture to the concrete

To improve workability and/or increase initial setting time of concrete and cement grout, admixture conforming to IS:9103 and ASTM C-494, (Type F - High Range Water Reducing admixture) can be added in appropriate dosage, subject to their satisfactory proven use.

Clear Cover to reinforcement (unless otherwise specified in the respective drawing sheets)

Reinforcement bars of all components of the superstructure:	40mm
Prestressing ducts or strands in superstructure:	75mm
All components of abutment, pier, pile caps and piles (except stoppers and bearing pedestals):	75mm
Bearing pedestals and Stoppers:	50mm

Cover shall be ensured with the use of properly sized cement concrete blocks which can be secured to the re-bars or other devices approved by the engineer-in-charge. Use of loose stones or wooden pieces is not permitted.

Notes on Reinforcement

- All reinforcing steel bars shall be High Strength Deformed bars with grade Fe500 conforming to IS:1786
- Laps and Splices shall conform to IRC:112-2020, Clause 15.2.5. Use of mechanical coupler is permitted upon approval by the engineer.

Notes on Prestressing

- Prestressing strands shall be Class-2, uncoated 7 ply, low relaxation type with ultimate tensile stress 1862 N/mm², conforming to IS:14268.
- The diameter of strands, their number in a tendon and the total jacking force to be applied is specified in the respective drawing sheet. All the initial and long term losses are already incorporated in design.
- Corrugated HDPE Sheathing ducts shall be used with the minimum internal diameter not less than three times the cross sectional area of the tendon. The wall thickness and other properties of the sheathing shall be as per IRC:112-2020, clause 13.4.3
- The specified profile and the alignment of the ducts shall be strictly maintained by properly securing the ducts to the re-bars. If required, pieces of re-bars can be added or the re-bars slightly repositioned or bent to maintain the profile and alignment, with approval of the engineer-in-charge.
- The jacking equipment shall be fitted with appropriate force measuring device and shall be regularly checked and calibrated as prescribed by the manufacturer.
- Jacking shall be done from both ends simultaneously and gradually, recording the elongation both sides. The expected final elongation mentioned in the respective drawings sheet is based on modulus of elasticity of the strands (Es) equal to 1.95x10^5 MPa. If the Es of supplied strands is different then the elongation values shall be recalculated by multiplying the Design values of elongation by the ratio of Design Es / Actual Es.
- In case the total elongation is not achieved at the prescribed jacking force, the jacking operation can be continued until the force reaches the maximum allowable value. If the required elongation is achieved at jacking force lower than the prescribed value, the jacking operation shall continue until the prescribed force is reached, provided the Sum of the additional elongations thus achieved is not more than 5% of the sum of the prescribed elongations.
- In adverse condition to any of the cases above, the jacking operation shall be stopped, the tendons removed and this matter reported to the engineer-in-charge for further instruction. The jacking force should NEVER exceed the Maximum allowable value.

Grouting

- The tendons which satisfy the above conditions shall be grouted properly, ensuring the duct is free of any foreign material and there is no leak or damage around the joints between the anchors and the ducts. Grouting can be normally done immediately after successful completion of tensioning operations and shall not be delayed by more than 5 days of tensioning of the cables.
- The grout shall be prepared with Ordinary Portland cement with suitable expansive admixture approved by the engineer. Admixture containing chloride and nitrate are not permitted. The water/cement ratio shall not be more than 0.48. Retempering of the grout shall not be permitted. The grout shall be mixed with mechanical mixers and shall be continuously kept agitated until pumped in.

Stages and sequence of Prestressing

- The Precast composite girders shall be prestressed in two stages. The specified number of the tendons shall be tensioned in the prescribed sequence shown in the respective drawing sheet.
- The remaining tendons shall be tensioned after specified days after casting of the deck slab, in the sequence shown in the respective drawing sheet.
- The prestressing of the precast girder shall be started only after confirming that the cube specimen has achieved 100% of the prescribed compressive strength. No early prestressing allowed.

Construction methodology and sequence for Precast Prestressed Composite superstructure

- The main girders are be precast near the bridge site at suitable location (approach road or dry river bed, if available) on well prepared casting yard. The choice of location also depends upon the equipment available for lifting or launching the girders. After completion of the prestressing works the girders are either lifted by suitable cranes or pushed/launched with the help of rails and jacks or launching girders and placed carefully over the already completed substructure. Care shall be taken that all the preparatory works for the bearings are done properly before the launching/placing of the girders.
- Lifting shall be done only by the hooks provided at both ends. In case of jacking the jacking points shall be only just under the location of the hooks. No support, lifting or jacking is allowed at any other section of the girder
- After placing all the main girders and finishing the works on the bearings, the formwork for deck slab and cross girders are prepared. All the formwork for deck slab and cross girders shall be supported by the main girders. The main girders shall remain un-propped during casting of the deck slab. Similarly there shall be no false-work or props from the ground or part of substructure during casting of the deck slab.
- The Contractor shall ensure stability of the girders during all stages of construction.
- Dimensional tolerances for the precast girders shall be as per IRC:SP:71-2018, Clause 4.10. If not prescribed otherwise, transportation and handling operation shall follow the guidelines in Clause 4.9 of the same documents.
- The prescribed time-line for construction of the superstructure is as follows

Prestressing of Precast Girder only (Stage 1)	After 28 days of casting or confirming 100% compressive strength of concrete
Lifting/Launching of the Girder	Within 14 days of first stage prestressing
Casting of the Deck Slab	Within 14 days of placing of girder over substructure
Prestressing of Girder (Stage 2)	After 14 days of casting of deck slab
Casting of Footpath, Crash Barrier, Wearing Course etc	Preferably within 7 days but not later than 14 days of Second stage prestressing

Deviation from the above time-line is subject to approval by the engineer. No other vehicle except the concreting apparatus are allowed on the deck until the deck slab has attained its full specified strength.

Construction methodology for Cast-in-situ RCC superstructure

- Construction of Monolithic cast in situ RCC superstructure shall follow the standard practices. The falsework for the girders and deck slab are supported on the ground and removed after specified time period.

Notes on Bearings

- The contractor shall supply, provide and install the bearings designed according to the loadings and other relevant information provided in the drawings or BOQ.
- The dimension and number of layers of the Elastomeric bearings shown in the drawings are tentative. The bearings shall be designed, fabricated, tested and installed as per IRC:83 - 2018, Part-2 for elastomeric bearing and Part-3 for Pot-PTFE bearings, as the case applies.

Notes on Foundation and Substructure

- Standard Specifications and Special provisions to the Standard Specifications (if any) and specific notes on the drawings shall be followed for the construction of the abutments, piers and foundations.
- Backfill behind the abutment shall be places only after the concrete has achieved full 28 days strength. Heavy compaction equipment weighing more than 10 Ton shall not be used within 2.0 meters from the back of the abutment until all the works on superstructure is completed.
- The graded backfill behind the abutment shall be at a slope not steeper than 62 degrees, starting from the back of the footing. The back fill material dry density shall be within 1900 to 2200 kN/m³ and moisture content between 9 to 15%
- In case of new bridge adjacent to the existing bridge, care shall be taken not to render any damage to the elements of the existing bridge. Particular attention shall be paid to the foundation of the existing bridge. The contractor shall ensure that excavation for the foundation of the new bridge does not cause instability or settlement of the foundation of the existing bridge.
- If the existing bridge has a shallow foundation, the contractor shall protect the existing foundation by sheet piling or any other suitable means to the satisfaction of the engineer, before excavating for the foundation of the new bridge.

General Note: (For all Pile Foundation)

- Drilling/Boring works for pile is allowed only with rotary or oscillator type drilling equipment.No percussion method is allowed .Stability of borehole shall be ensured by the use of temporary casing.Use of other methods of borehole stability is subject to approval by the engineer, but in such case use of water/air/chemical jetting for boring process shall not be allowed.
- In case of drilling/boring without temporary casing,the contractor should ensure the stability and uniformity of the borehole before lowering the reinforcement cage and during concreting.
- Boring/Drilling of the piles is preferred in a staggered pattern.Boring/Drilling for any pile shall not commence before 24 hours of completion of concreting of any pile within a radius of 6 meters from its center.
- In case of drilling/boring without temporary casing , the pile shall be lined with 6mm thick permanent casing from the bottom of the pile cap down to 0.5 m below the maximum scour depth or 1.5 m whichever is larger.

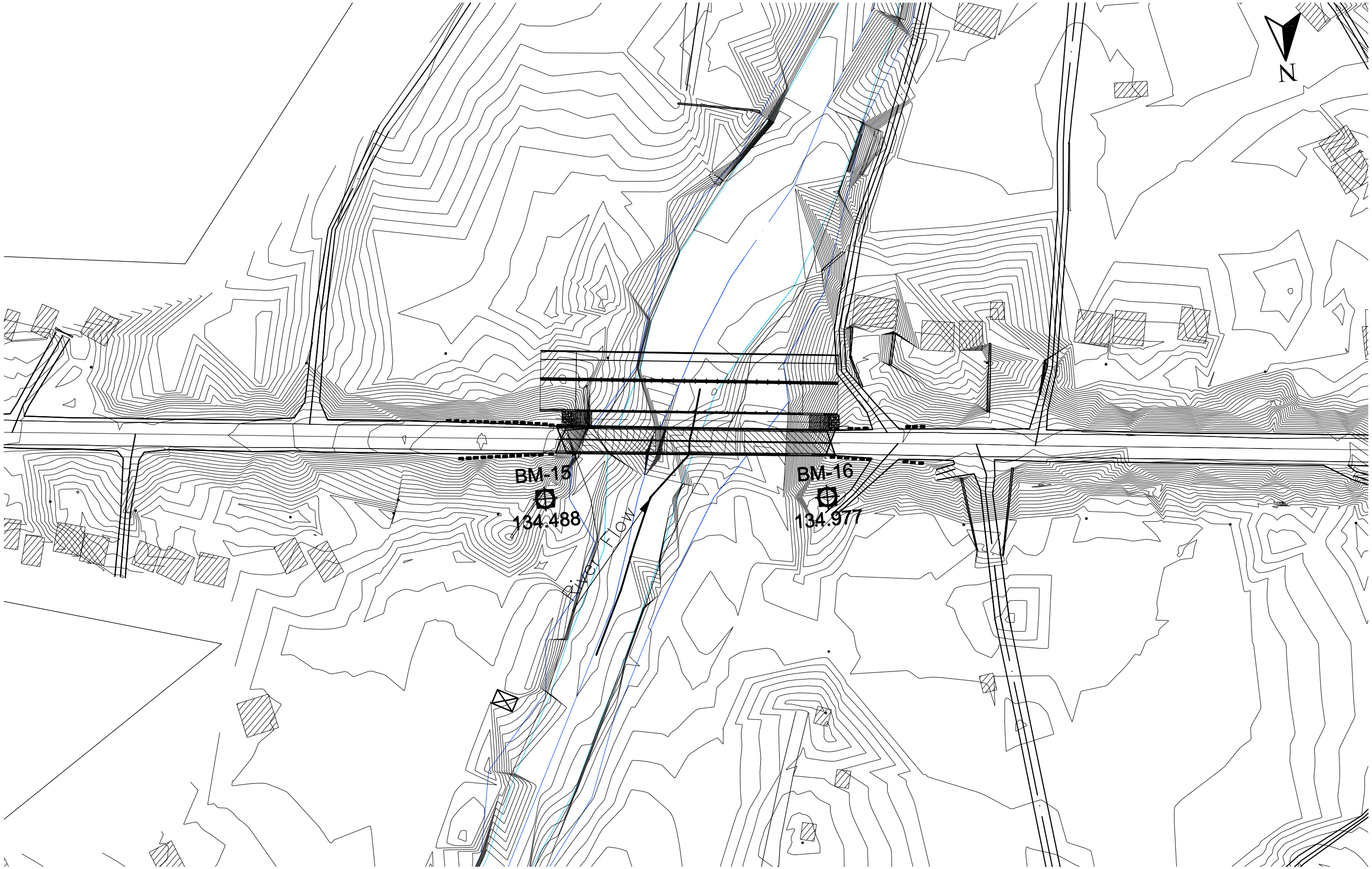

Government of Nepal Ministry of Physical Infrastructure and Transport **Department of Roads** **Project Directorate Office (ADB)** **SASEC Highway Improvement Project-** **Project Preparatory Consultant (SHIP-PPC)** **ADB Loan No: 3722-NEP**	**CONSULTANT:** Soosung Engineering Co. Ltd, Korea in association with ERMC P (Ltd) and TE-Tech Studio of Engineeering Nepal	**IMPLEMENTING AGENCY:** **DOR, DCID** **ROAD NAME:** **East West Highway (H01)** **Butwal - Gorusinghe Section**	**SHEET TITLE:** Topographic Map of **Satgadi-1 Bridge** (46/H001/292_A)	**SCALE:** 1:1		**NAME**	**SIGNATURE**	**REV NO.**	**DESCRIPTION**	**DATE:** November , 2022 **DWG.NO.:** 292_Satgadi-1 **SHEET NO.:** 2.1/28
					Designed by:	Saroj Bhattarai				
					Checked by:	P. Upadhyaya				
					Approved by:	Dr. T.H.Choi				

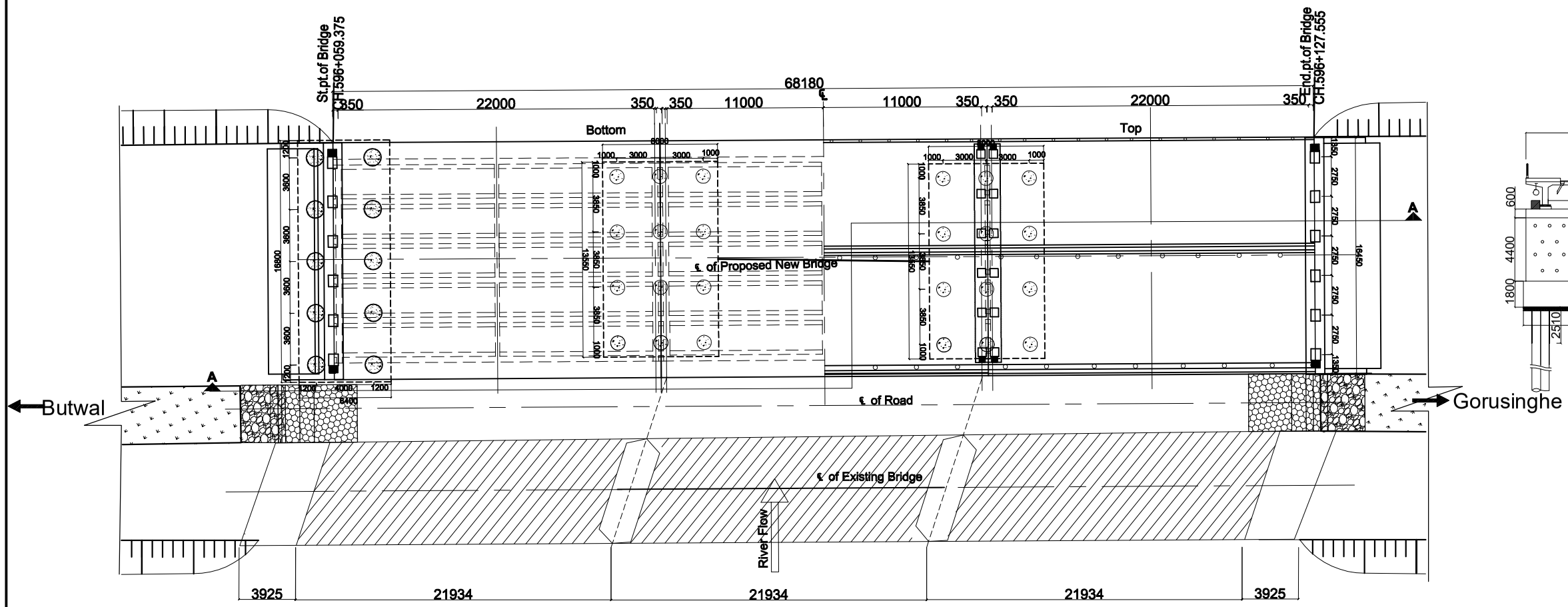

Half Sectional Plan
Scale:-1:300

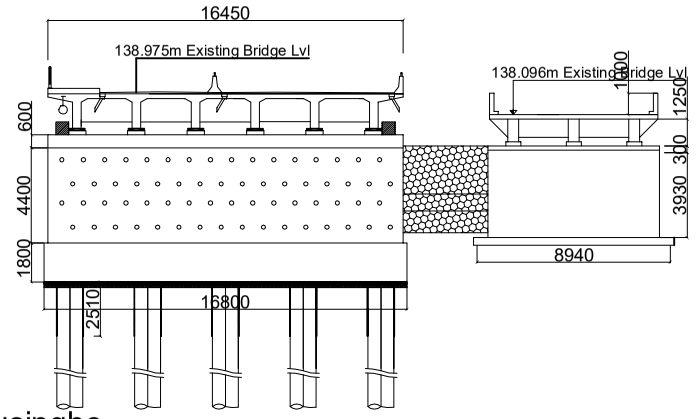

Section Of Abutment At (B-B)
Scale:-1:300

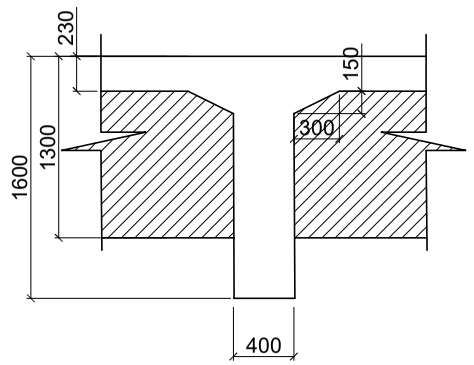

Section 1-1 Main Girder
Scale:-1:50

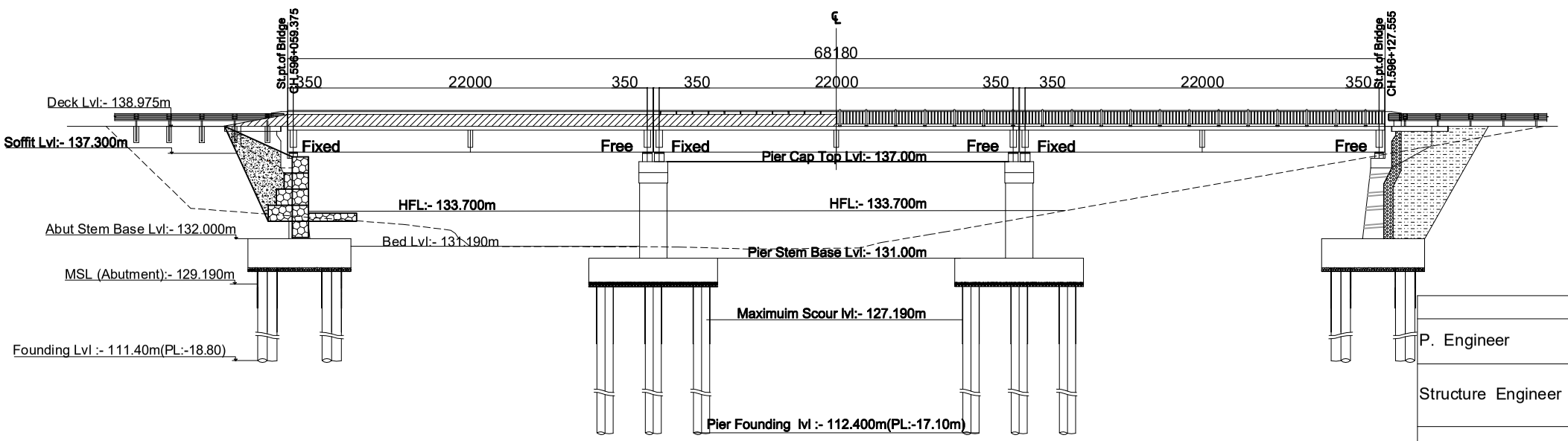

Half SECTION Elevation
Scale:-1:300

	Name(NEC Number)	Signature
P. Engineer	P. Upadhyaya (Civil A 675)	
Structure Engineer	K.P.Wagle(Civil A 127) / P.Shrestha(Civil A 676) / S.Bhattarai (Civil A 904)	
Hydrologist	Dr. P.C. Jha(Civil A 166) / S. Adhikari (Civil A 408)	
Geotechnical Engineer	A. Adhikari(ka 199) / Dr. V . R. S. Shahi	

Government of Nepal
Ministry of Physical Infrastructure and Transport
Department of Roads
Project Directorate Office (ADB)
SASEC Highway Improvement Project-
Project Preparatory Consultant (SHIP-PPC)
ADB Loan No: 3722-NEP

CONSULTANT:
Soosung Engineering Co. Ltd, Korea
in association with
ERMC P (Ltd)
and
TTE-Tech Studio of Engineeering Nepal

ROAD NAME:
East West Highway (H01)
Butwal - Gorusinghe Section

SHEET TITLE:
General Arrangement of
Satgadi 1 Bridge
(46/H001/292_A)

SCALE:
1:300

	NAME	SIGNATURE	REV NO.	DESCRIPTION
Designed by:	Saroj Bhattarai			
Checked by:	P. Upadhyaya			
Approved by:	Dr. T.H.Choi			

DATE: Sep,2022
DWG.NO.: 292_Satgadi
SHEET NO.: 03/28

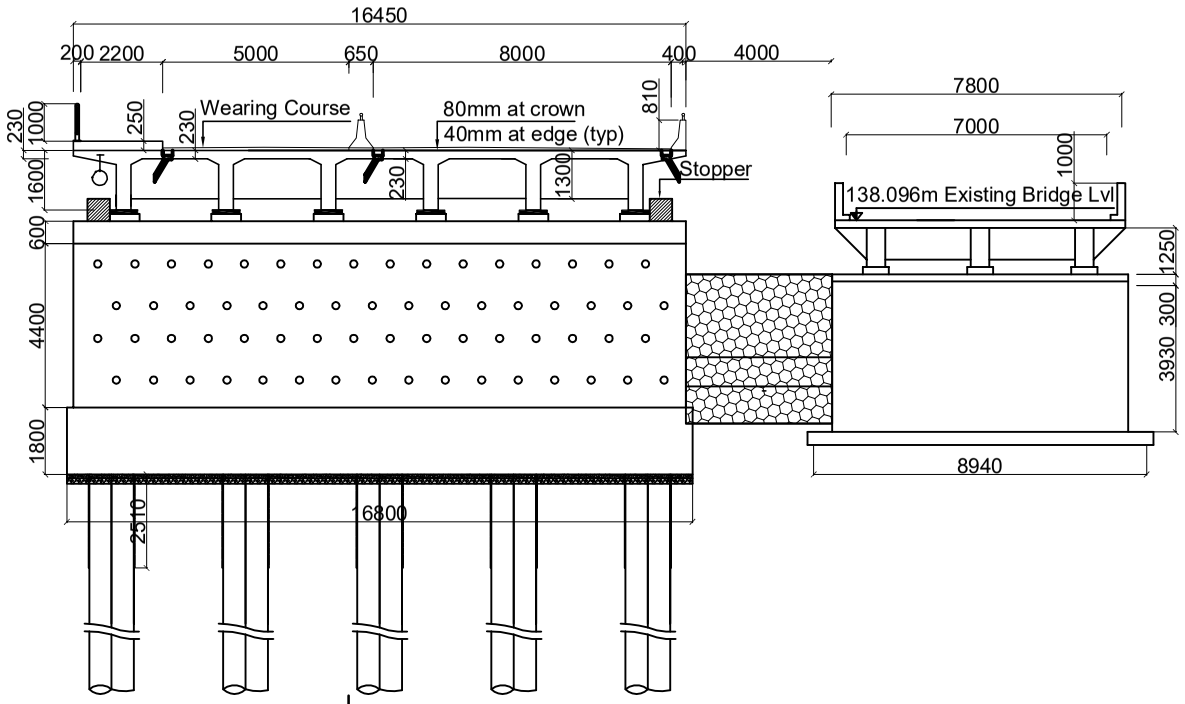

Elevation of Abutment
Scale:-1:200

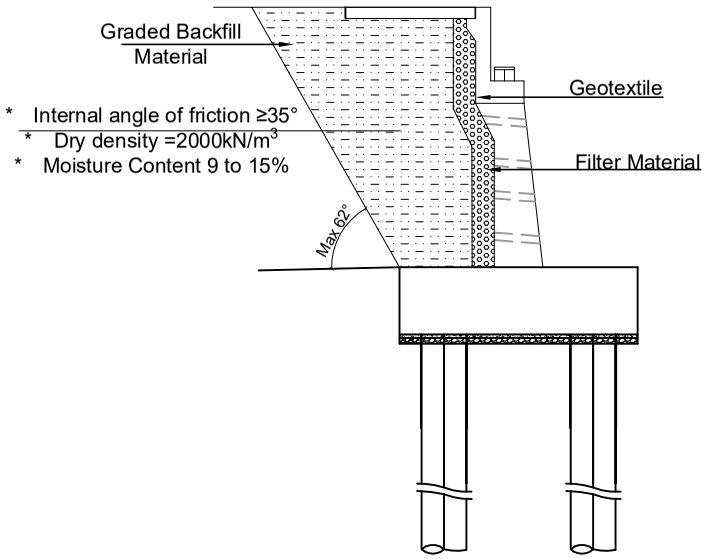

Detail of A
Scale:-1:200

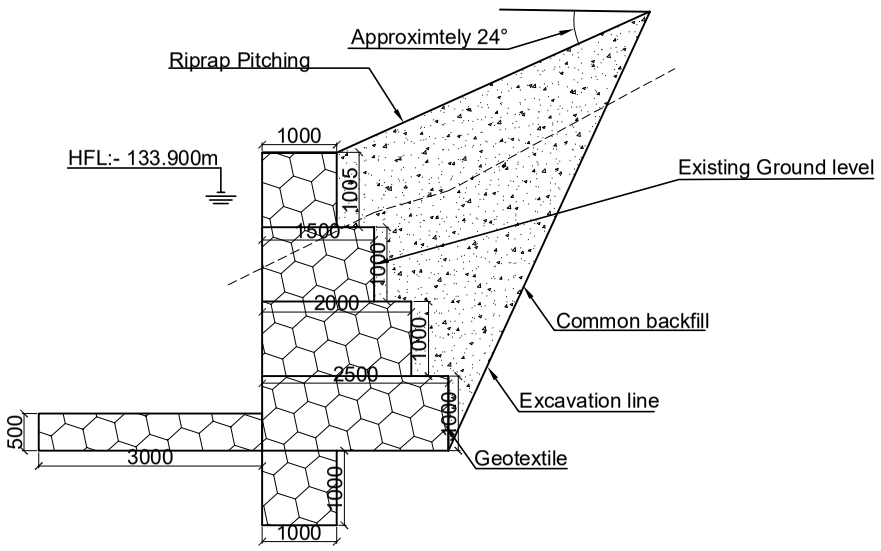

Section at X-X
Scale:-1:100

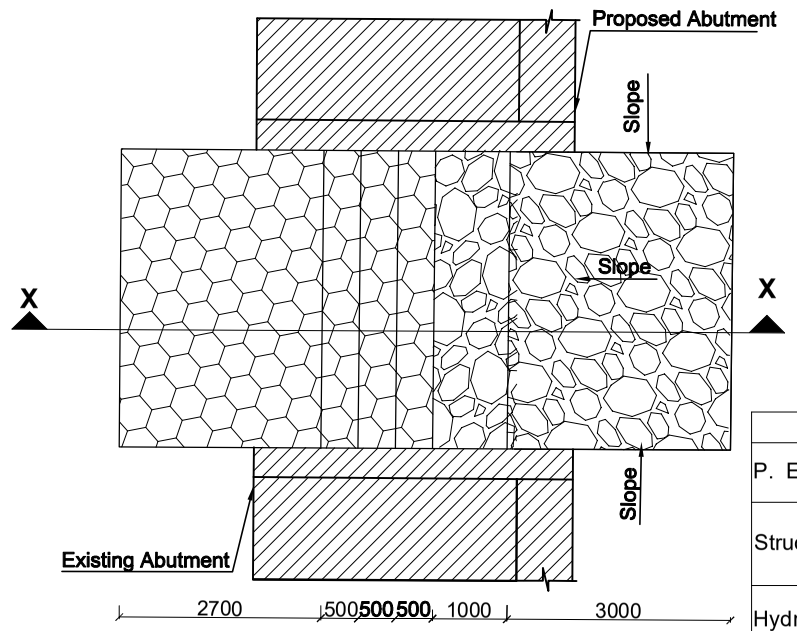

Detail Plan of X
(Transition Between Approach Embankments)
Scale:-1:100

	Name(NEC Number)	Signature
P. Engineer	P. Upadhyaya (Civil A 675)	
Structure Engineer	K.P.Wagle(Civil A 127) / P.Shrestha(Civil A 676) / S.Bhattarai (Civil A 904)	
Hydrologist	Dr. P.C. Jha(Civil A 166) / S. Adhikari (Civil A 408)	
Geotechnical Engineer	A. Adhikari(ka 199) / Dr. V . R. S. Shahi	

Government of Nepal Ministry of Physical Infrastructure and Transport **Department of Roads** **Project Directorate Office (ADB)** **SASEC Highway Improvement Project-** **Project Preparatory Consultant (SHIP-PPC)** **ADB Loan No: 3722-NEP**	**CONSULTANT:** Soosung Engineering Co. Ltd, Korea in association with ERMC P (Ltd) and TPE-Tech Studio of Engineeering Nepal	**ROAD NAME:** **East West Highway (H01)** Butwal - Gorusinghe Section	**SHEET TITLE:** General Arrangement of **Satgadi 1 Bridge** (46/H001/292_A)	**SCALE:** 1:300		**NAME**	**SIGNATURE**	**REV NO.**	**DESCRIPTION**	**DATE:** Sep,2022
					Designed by:	Saroj Bhattarai				**DWG.NO.:** 292_Satgadi
					Checked by:	P. Upadhyaya				
					Approved by:	Dr. T.H.Choi				**SHEET NO.:** 04/28

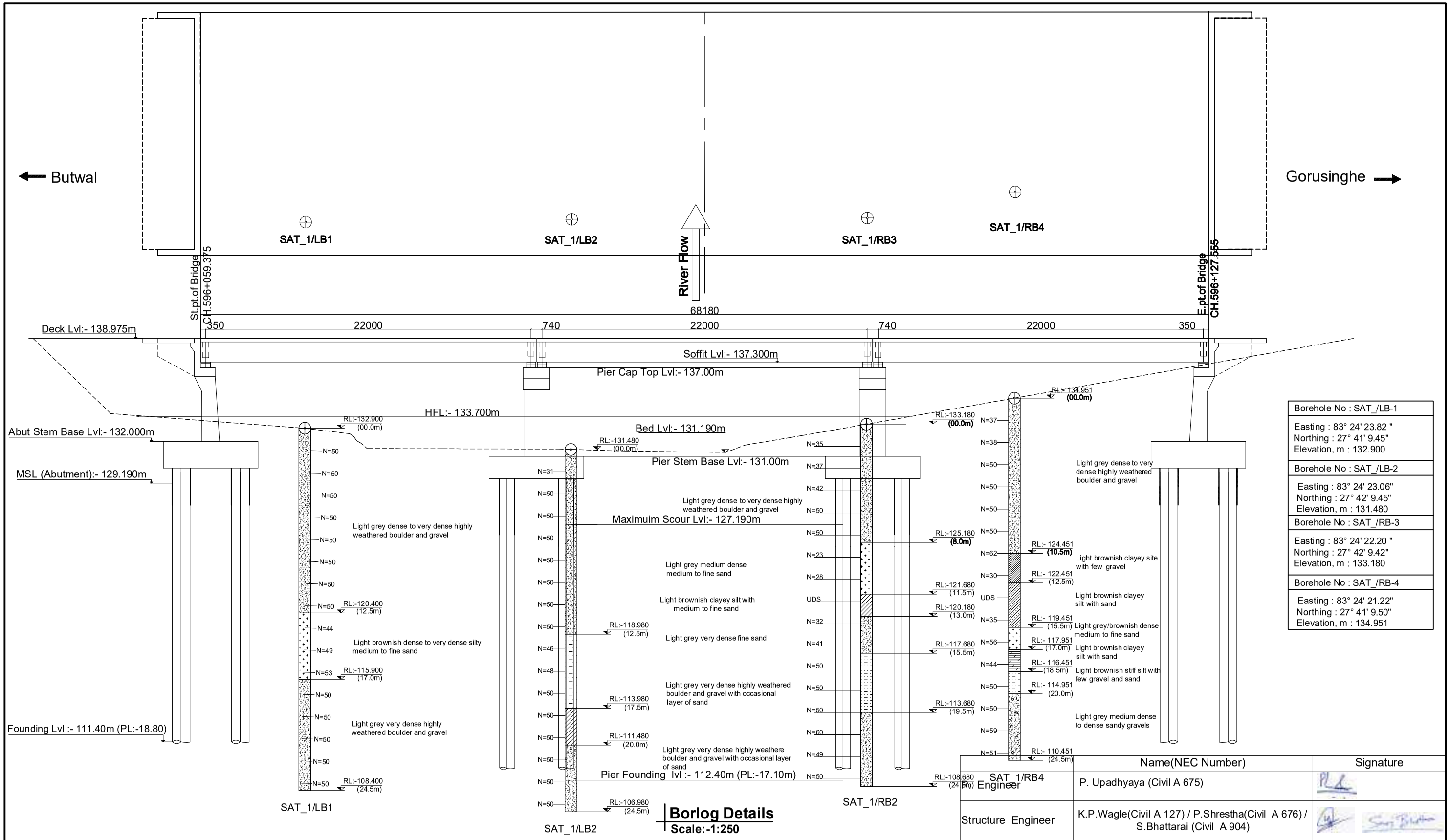

Borehole No : SAT_/LB-1
Easting : 83° 24' 23.82 " Northing : 27° 41' 9.45" Elevation, m : 132.900
Borehole No : SAT_/LB-2
Easting : 83° 24' 23.06" Northing : 27° 42' 9.45" Elevation, m : 131.480
Borehole No : SAT_/RB-3
Easting : 83° 24' 22.20 " Northing : 27° 42' 9.42" Elevation, m : 133.180
Borehole No : SAT_/RB-4
Easting : 83° 24' 21.22" Northing : 27° 41' 9.50" Elevation, m : 134.951

Location	Design Pile Length m	Design Working load on pile (non - seismic casse)kn	Allowable Bearing Capacity on pile (Scour case) kn	Allowable Bearing Capacity of the Pile (Non Scour case)kn
Abutment	18.8	1724	2243	2371
Pier	17 .1	1102	1630	1841

NOTE ON SUB-SOIL PROFILE
The sub-soil profile shown here is based on information obtained from the investigation bore-holes at the locations as shown.The actual soil type away from the vicinity of the boreholes may differ .

	Name(NEC Number)	Signature
Engineer	P. Upadhyaya (Civil A 675)	
Structure Engineer	K.P.Wagle(Civil A 127) / P.Shrestha(Civil A 676) / S.Bhattarai (Civil A 904)	
Hydrologist	Dr. P.C. Jha(Civil A 166) / S. Adhikari (Civil A 408)	
Geotechnical Engineer	A. Adhikari(ka 199) / Dr. V . R. S. Shahi	

Government of Nepal
Ministry of Physical Infrastructure and Transport
Department of Roads
Project Directorate Office (ADB)
SASEC Highway Improvement Project-
Project Preparatory Consultant (SHIP-PPC)
ADB Loan No: 3722-NEP

CONSULTANT: Soosung Engineering Co. Ltd, Korea in association with ERMC P (Ltd) and TTE-Tech Studio of Engineeering Nepal

ROAD NAME: East West Highway (H01)

Butwal - Gorusinghe Section

SHEET TITLE: Bore Log of **Satgadi 1 Bridge** (46/H001/292_A)

SCALE: 1:250

	NAME	SIGNATURE	REV NO.	DESCRIPTION
Designed by:	Saroj Bhattarai			
Checked by:	P. Upadhyaya			
Approved by:	Dr. T.H.Choi			

DATE: Sep,2022
DWG.NO.: 292_Satgadi
SHEET NO.: 05/28

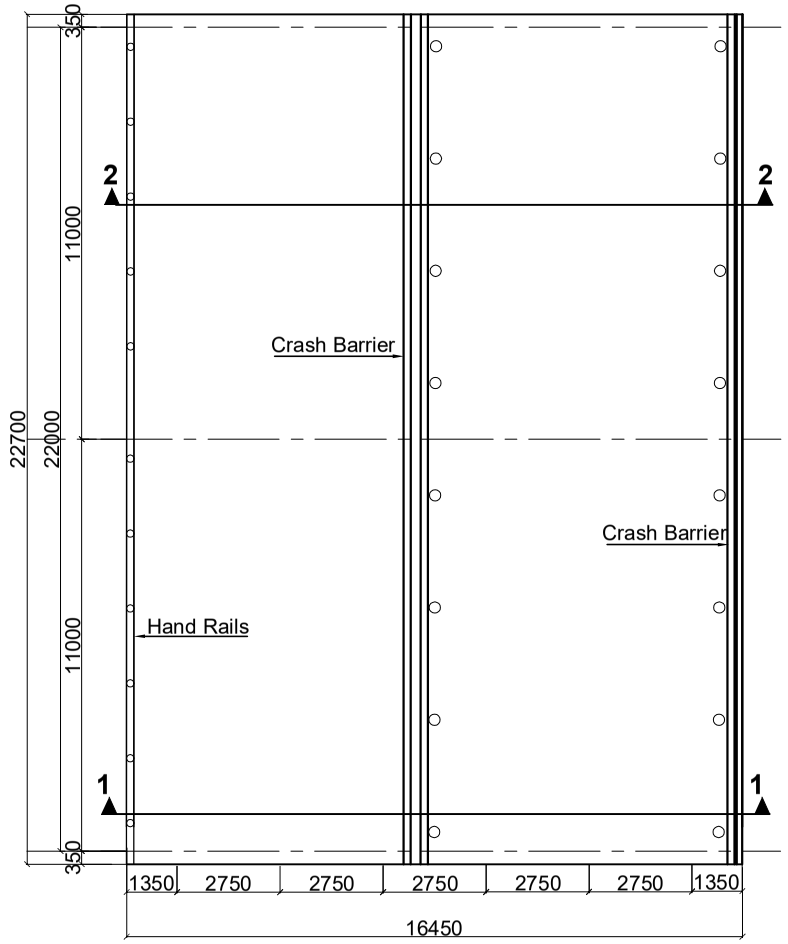

Plan Of Deck
Scale:-1:200

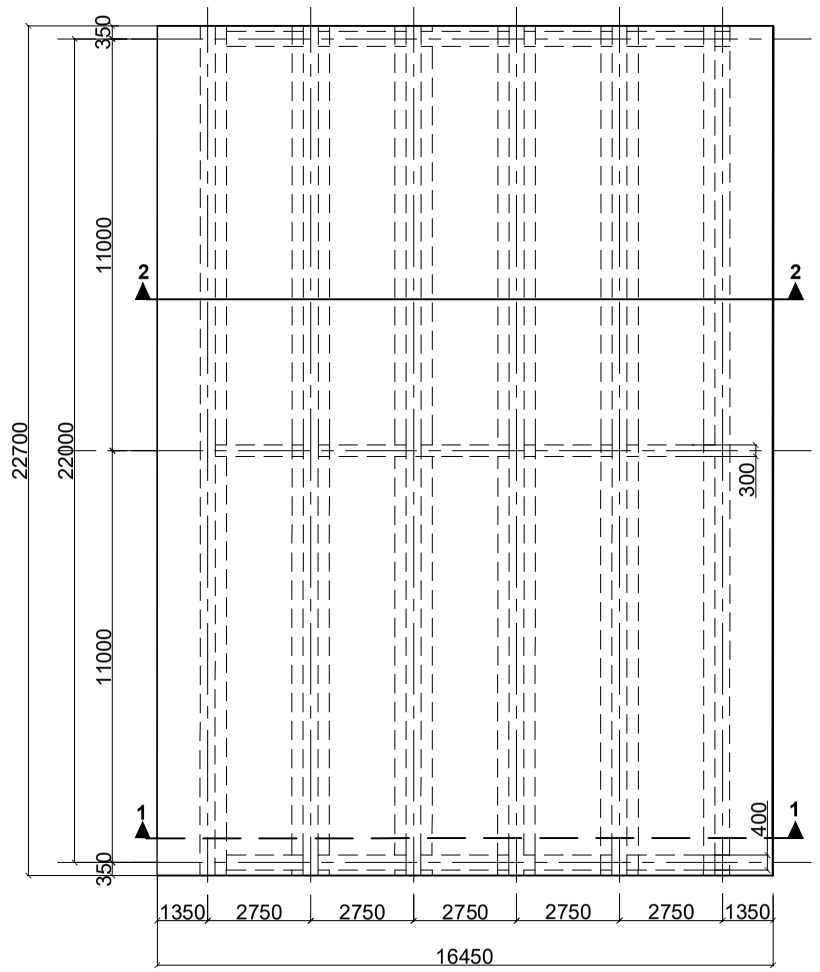

Plan Of Girder
Scale:-1:200

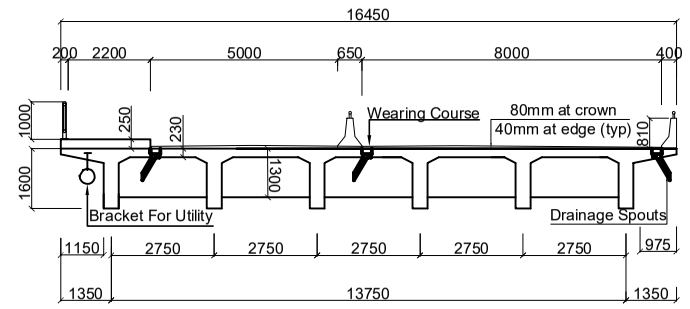

Section At 1-1
Scale:-1:150

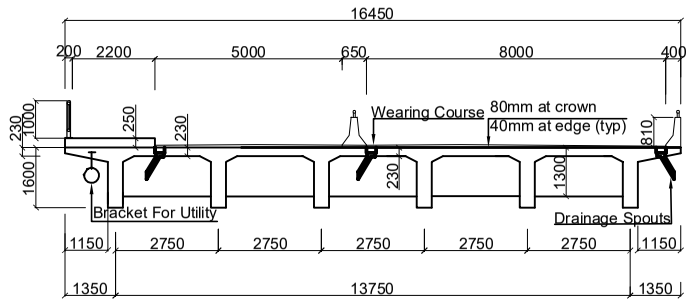

Section At 2-2
Scale:-1:150

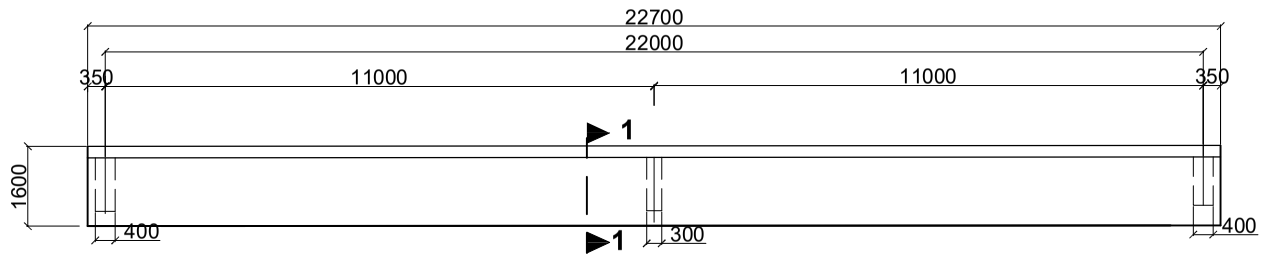

Longitudinal Sectional Elevation
Scale:-1:150

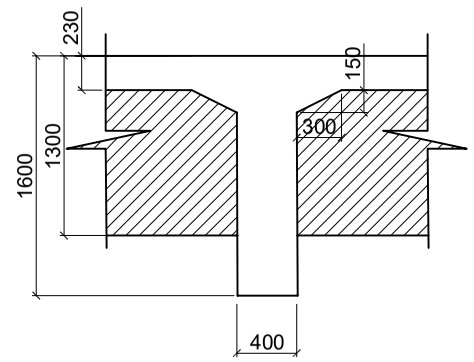

Section 1-1 Main Girder
Scale:-1:50

NOTES:
Dowel bars similar to the longitudional bars of the cross section girders shall be placed in the precast main girder before casting. The longitudional bars of the cross girder shall be lapped to the dowel bers, which shall have a lap length of 60 dia. of the corresponding bars.

NOTE:
The bridge has been designed to safely carry three driving lanes. If required in future the footpath can be used as driving lane, moving the crash barrier to the location of the hand-rails.

Government of Nepal Ministry of Physical Infrastructure and Transport **Department of Roads** **Project Directorate Office (ADB)** **SASEC Highway Improvement Project-** **Project Preparatory Consultant (SHIP-PPC)** **ADB Loan No: 3722-NEP**	**CONSULTANT:** Soosung Engineering Co. Ltd, Korea in association with ERMC P (Ltd) and TJE-Tech Studio of Engineeering Nepal	**ROAD NAME:** **East West Highway (H01)** Butwal - Gorusinghe Section	**SHEET TITLE:** Detail of Superstructure of **Satgadi-1 Bridge** (46/H001/292_A)	**SCALE:** As Shown		**NAME**	**SIGNATURE**	**REV NO.**	**DESCRIPTION**	**DATE:** Sep,2022
					Designed by:	Saroj Bhattarai				**DWG.NO.:** 292_Satgadi-1
					Checked by:	P. Upadhyaya				
					Approved by:	Dr. T.H.Choi				**SHEET NO.:** 06/28

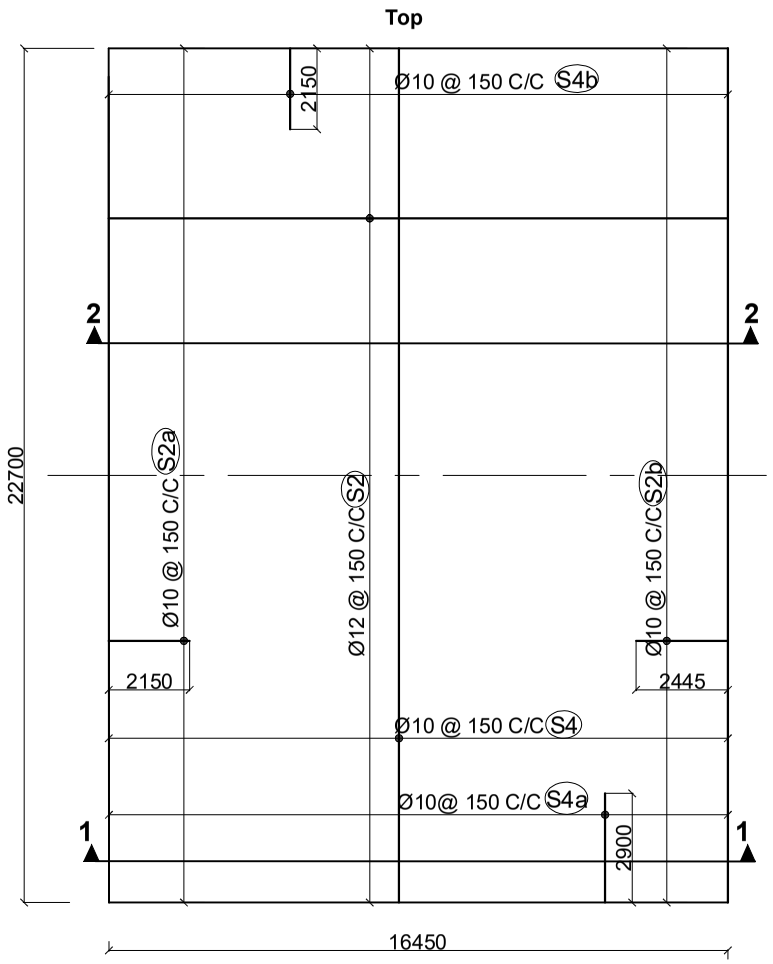

Reinforcement Details Of Deck Slab(Top Face)
Scale:-1:200

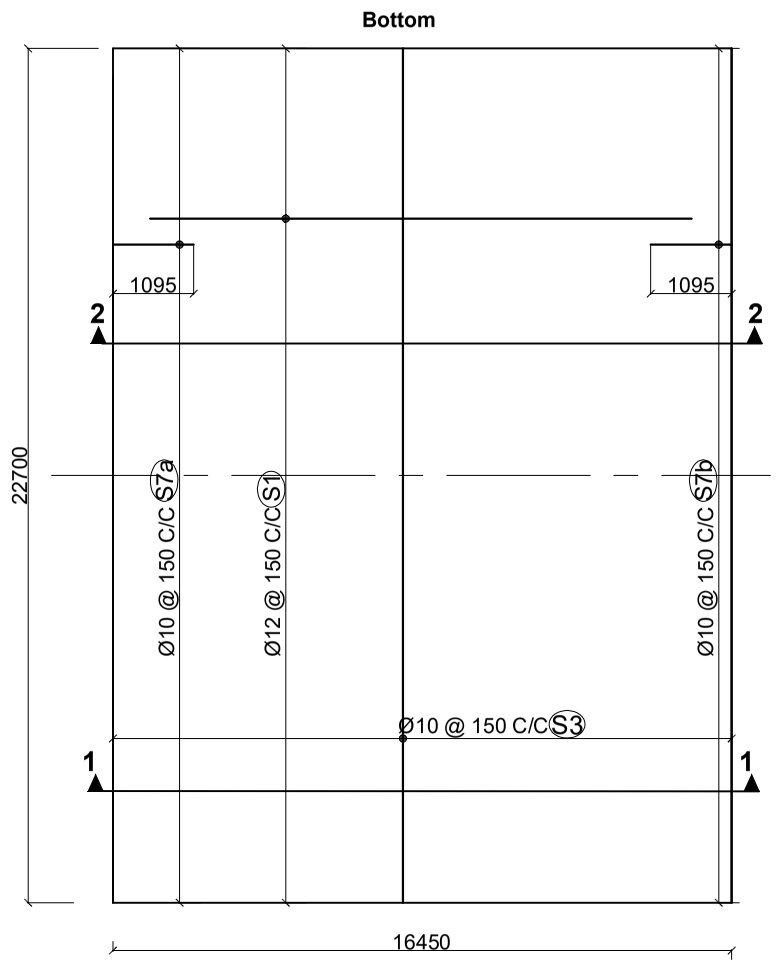

Reinforcement Details Of Deck Slab(Bottom Face)
Scale:-1:200

NOTE:

1.On Shear Connection:
The transverse bars of the deck slab(S2) shall be tied to vertical stirrups of the longitudinal girders.

2.Top Surface of the Main Girder:
Surface to be roughened by wire brush immediately after initial setting. The surface shall be properly cleaned by pressure blower prior to casting of the deck concrete

3.On Wearing Course:
The level of wearing course along the longitudinal direction shall be kept horizontal throughout the length of the deck. The thickness of wearing course towards the ends along the deck shall be increased suitably to compensate for the slope due to hogging of the girder by pre stress.

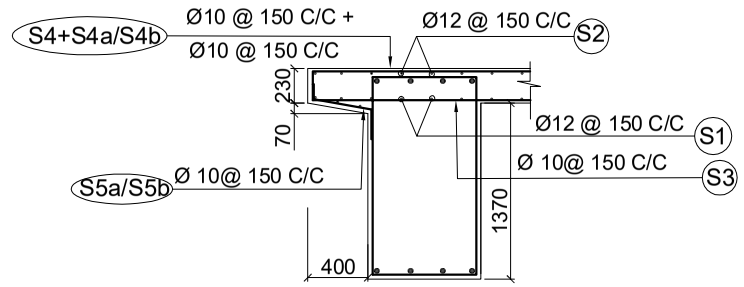

Reinforcement Details At Deck Extension
Between The Main Girder

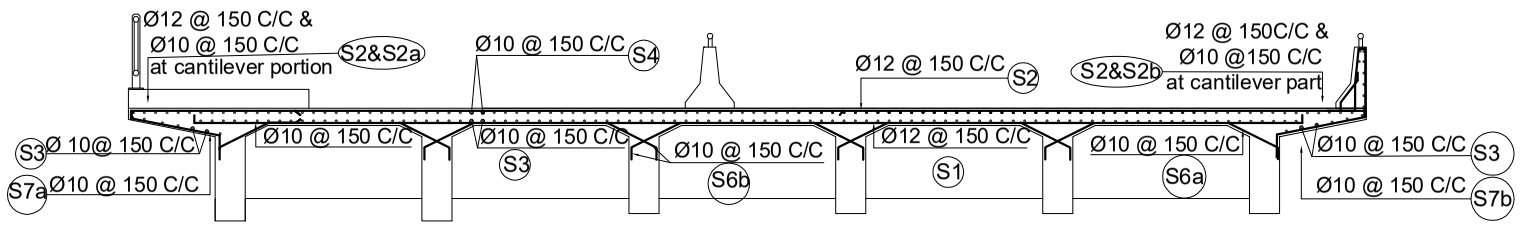

Section At 1-1
Scale:-1:100

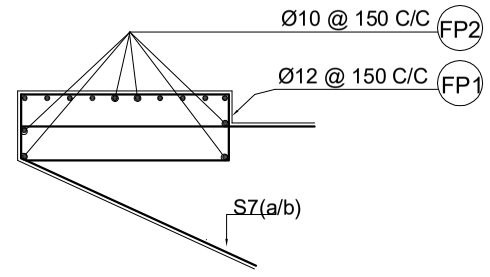

Reinforcement Details At Footpath
Between The Main Girder

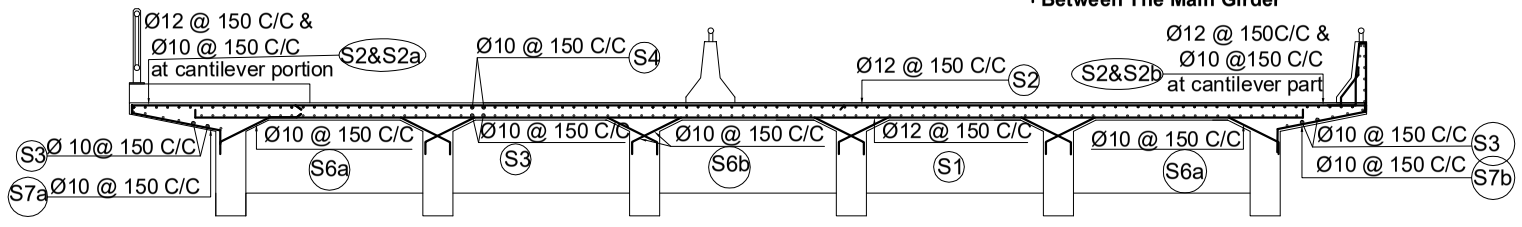

Section At 2-2
Scale:-1:100

Government of Nepal Ministry of Physical Infrastructure and Transport **Department of Roads** **Project Directorate Office (ADB)** **SASEC Highway Improvement Project-** **Project Preparatory Consultant (SHIP-PPC)** **ADB Loan No: 3722-NEP**	**CONSULTANT:** Soosung Engineering Co. Ltd, Korea in association with ERMC P (Ltd) and TSE-Tech Studio of Engineeering Nepal	**ROAD NAME:** **East West Highway (H01)** Butwal - Gorusinghe Section	**SHEET TITLE:** Reinforcement Details of Slab of **Satgadi-1 Bridge** (46/H001/292_A)	**SCALE:** As Shown		**NAME**	**SIGNATURE**	**REV NO.**	**DESCRIPTION**	**DATE:** Sep,2022
					Designed by:	Saroj Bhattarai				**DWG.NO.:** 292_Satgadi-1
					Checked by:	P. Upadhyaya				
					Approved by:	Dr. T.H.Choi				**SHEET NO.:** 07/28

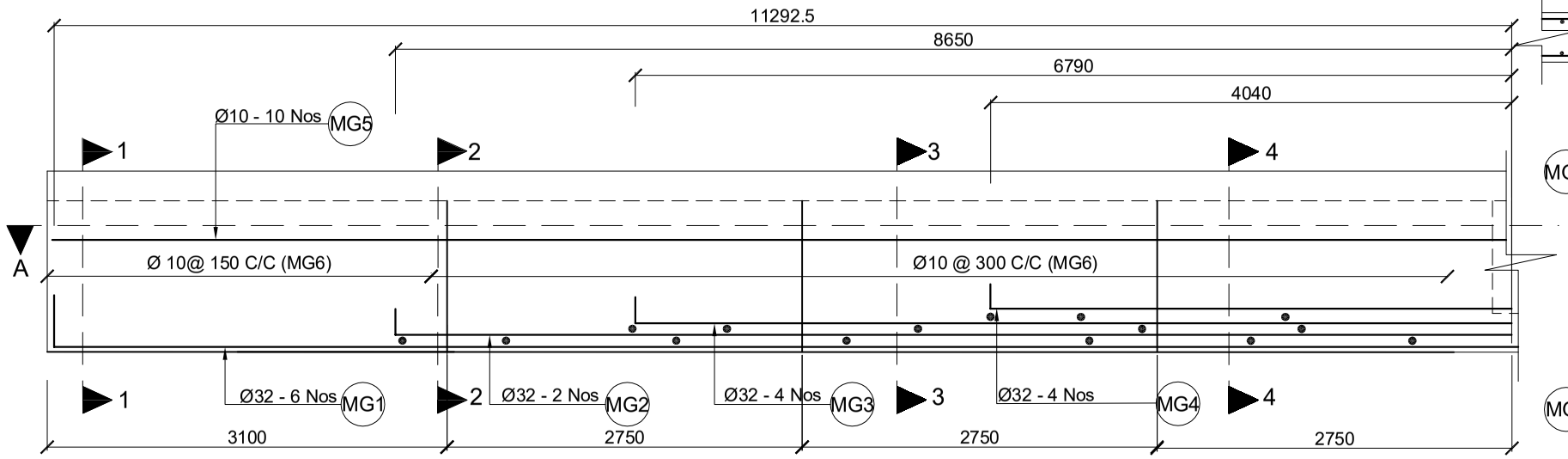

Reinforcement Details At Sectional Elevation Of Main Girder
Scale:-1:50

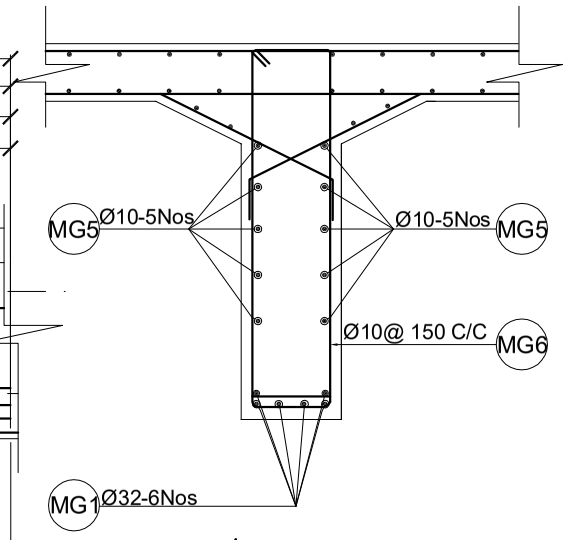

Section At 1-1
Scale:-1:30

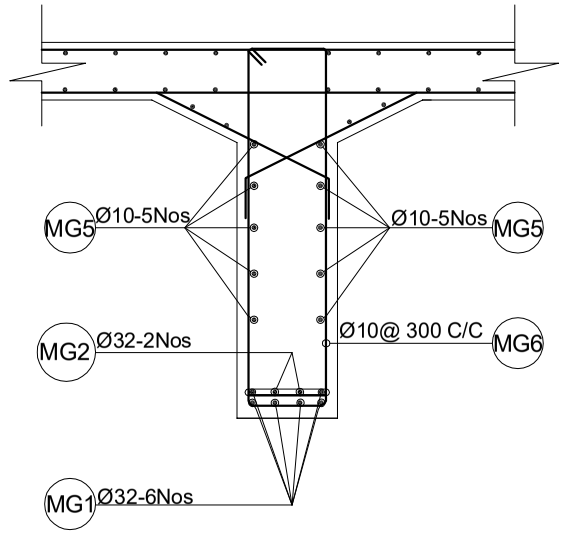

Section At 2-2
Scale:-1:30

MG1			MG1
MG1	MG1	MG1	MG1

Diagram of Bar Position
Section At 1-1

MG1	MG2	MG2	MG1
MG1	MG1	MG1	MG1

Diagram of Bar Position
Section At 2-2

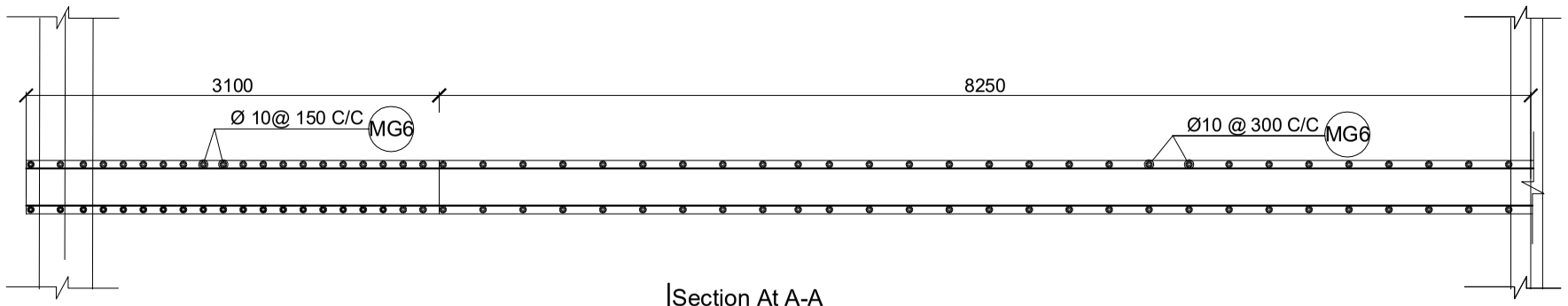

Section At A-A
Scale:-1:50

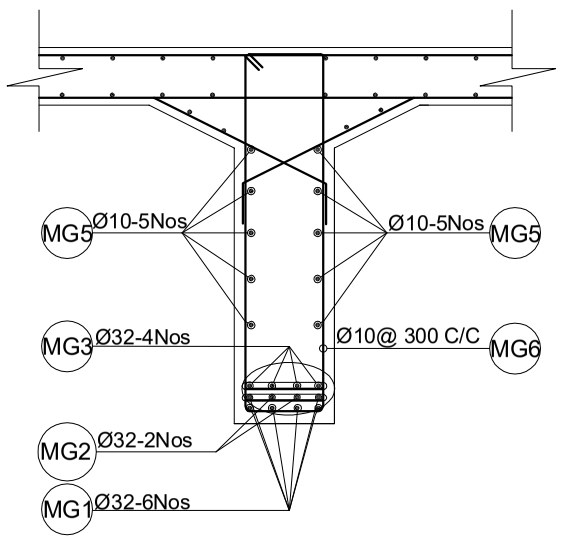

Section At 3-3
Scale:-1:30

MG3	MG3	MG3	MG3
MG1	MG2	MG2	MG1
MG1	MG1	MG1	MG1

Diagram of Bar Position
Section At 3-3

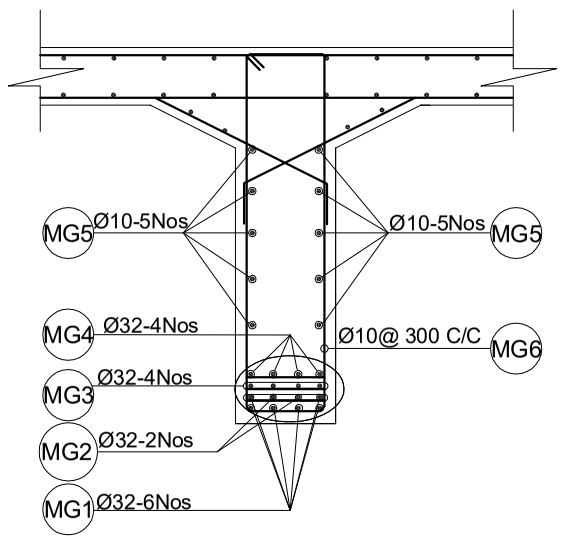

Section At 4-4
Scale:-1:30

MG4	MG4	MG4	MG4
MG3	MG3	MG3	MG3
MG1	MG2	MG2	MG1
MG1	MG1	MG1	MG1

Diagram of Bar Position
Section At 4-4

Government of Nepal Ministry of Physical Infrastructure and Transport **Department of Roads** **Project Directorate Office (ADB)** **SASEC Highway Improvement Project-** **Project Preparatory Consultant (SHIP-PPC)** **ADB Loan No: 3722-NEP**	**CONSULTANT:** Soosung Engineering Co. Ltd, Korea in association with ERMC P (Ltd) and TTE-Tech Studio of Engineeering Nepal	**ROAD NAME:** **East West Highway (H01)** Butwal - Gorusinghe Section	**SHEET TITLE:** Prestressing Details of Main Girder of **Satgadi-1 Bridge** (46/H001/292_A)	**SCALE:** As Shown		**NAME**	**SIGNATURE**	**REV NO.**	**DESCRIPTION**	**DATE:** Sep,2022
					Designed by:	Saroj Bhattarai				**DWG.NO.:** 292_Satgadi-1
					Checked by:	P. Upadhyaya				
					Approved by:	Dr. T.H.Choi				**SHEET NO.:** 08/28

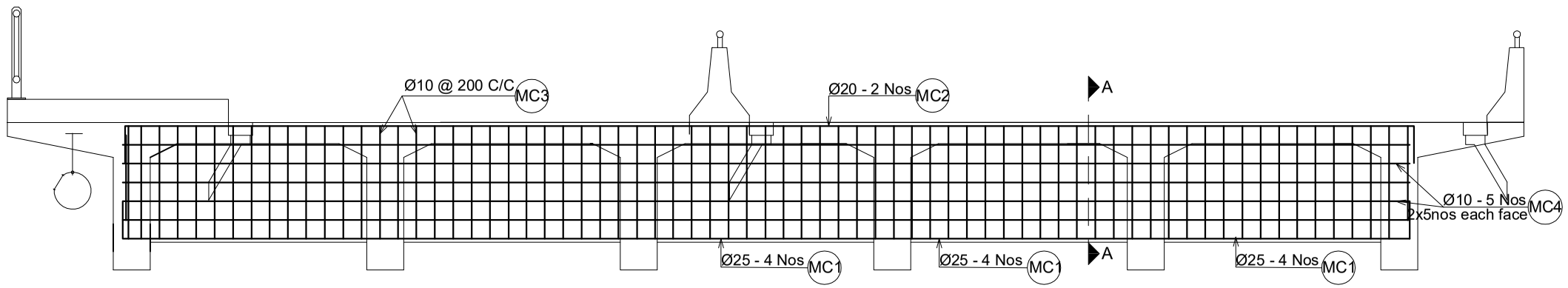

Intermediate Cross Girders
Scale:-1:60

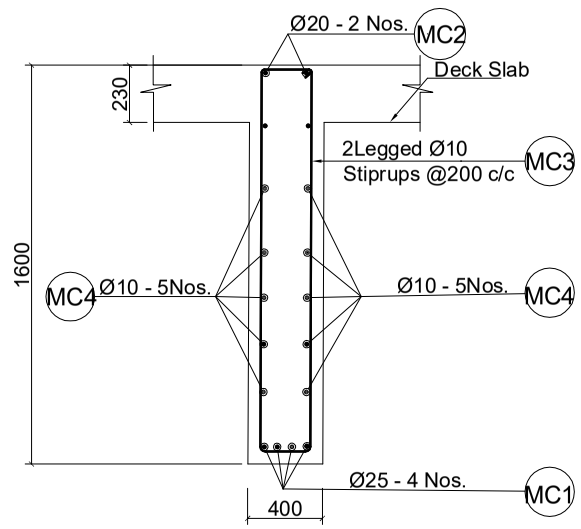

Section at A-A
Scale:-1:30

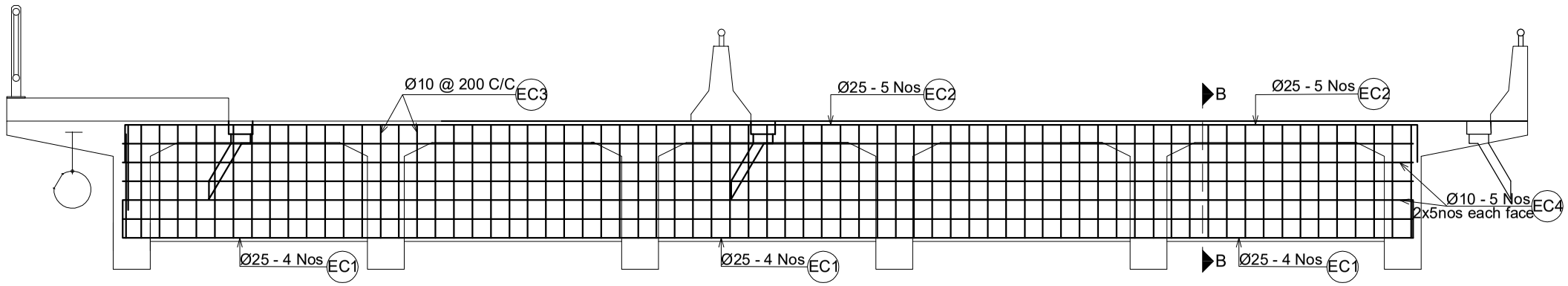

End Cross Girders
Scale:-1:60

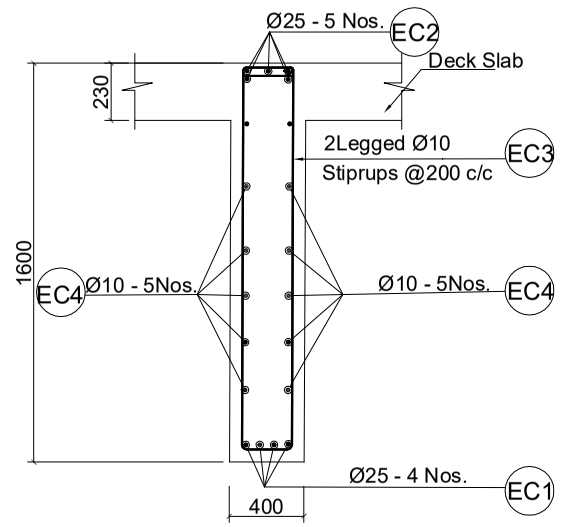

Section at B-B
Scale:-1:30

Government of Nepal Ministry of Physical Infrastructure and Transport **Department of Roads** **Project Directorate Office (ADB)** **SASEC Highway Improvement Project-** **Project Preparatory Consultant (SHIP-PPC)** **ADB Loan No: 3722-NEP**	**CONSULTANT:** Soosung Engineering Co. Ltd, Korea in association with ERMC P (Ltd) and TSC-Tech Studio of Engineeering Nepal	**ROAD NAME:** **East West Highway (H01)** Butwal - Gorusinghe Section	**SHEET TITLE:** Anchorage Details of **Satgadi-1 Bridge** (46/H001/292_A)	**SCALE:** As Shown		**NAME**	**SIGNATURE**	**REV NO.**	**DESCRIPTION**	**DATE:** Sep,2022
					Designed by:	Saroj Bhattarai				**DWG.NO.:** 292_Satgadi-1
					Checked by:	P. Upadhyaya				
					Approved by:	Dr. T.H.Choi				**SHEET NO.:** 09/28

BAR BENDING SCHEDULE OF DECK SLAB

BAR ID	SKETCH (mm)	SPACING (mm)	Ø OF BARS (mm)	NO. OF BARS	LENGTH (m)	WEIGHT/LENGTH (kg/m)	TOTAL WEIGHT (kg)
S1	14750 100	150/ 7Nos meter	12	152	14.950	0.888	2017.473
S2	16358 100	150/ 7Nos meter	12	152	16.560	0.888	2234.740
S2a	100 2150 Additional Bars At Left Cantilever	150 In Between S2	10	152	2.250	0.617	210.856
S2b	2150 100 Additional Bars At Right Cantilever	150 In Between S2	10	152	2.250	0.617	210.856
S3	22610 155	Med Deck 150	10	100	22.920	0.617	1413.107
		Left Cantilever 150	10	10	22.920	0.617	141.311
		Right Cantilever 150	10	10	22.920	0.617	141.311
S4	22610 155	150/ 7Nos Per Meter	10	111	22.920	0.617	1568.549
S4a	155 2600 Additional Bars At Left Deck End	150 In Between S4	10	111	2.755	0.617	188.541
S4b	2600 155 Additional Bars At Right Deck End	150 In Between S4	10	111	2.755	0.617	188.541
S6a	450 732 200	150	10	1410	1.380	0.617	1199.662
S7a	100 1095 200 Outer Side Of Left Exterior Girder	150/ 7Nos Per Meter	10	306	1.400	0.617	264.125
S7b	1095 100 200 Outer Side Of Right Exterior Girder	150/ 7Nos Per Meter	10	306	1.400	0.617	264.125
TOTAL EXCLUDING FOOTPATHS (in kg)							10043.198
TOTAL WEIGHT (IN METRIC TON)							10.043

BAR BENDING SCHEDULE FOR RCC MAIN GIRDER

BAR ID	SHAPE OF BAR IN mm (NOT TO SCALE)	Ø OF BARS (mm)	NO. OF BARS	LENGTH (m)	WEIGHT/LENGTH (Kg/m)	TOTAL WEIGHT (Kg)
MG1	400 22585 400	32	6	23.390	6.313	886.017
MG2	200 17300 200	32	2	17.700	6.313	223.493
MG3	200 13580 200	32	4	13.980	6.313	353.043
MG4	200 8080 200	32	4	8.480	6.313	214.149
MG5	22620	10	10	22.620	0.617	139.461
MG6	2*75 1510 310	10	104	3.790	0.617	243.015
MG7	320 Spacer Bar	32	38	0.320	6.313	76.770
TOTAL WEIGHT IN 1GIRDER						2135.949
TOTAL NUMBER OF GIRDERS AND TOTAL WEIGHT (IN METRIC TON)						2.136

BAR BENDING SCHEDULE FOR INTERMEDIATE CROSS GIRDERS

BAR ID	SKETCH (mm)	SPACING (mm)	Ø OF BARS (mm)	NO. OF BARS	LENGTH (m)	WEIGHT/LENGTH (kg/m)	TOTAL WEIGHT (kg)
MC1	400 13945 400	@ 175 c/c	25	4	14.745	3.853	227.272
MC2	13945 400 400	@ 175 c/c	20	2	14.745	2.466	72.727
MC3	2*60 1210 210	@ 200 c/c	10	69	2.960	0.617	125.922
MC4	13970 2X5 Nos Each Face		10	10	13.970	0.617	86.130
TOTAL WEIGHT IN 1GIRDER(in kg)							512.051
TOTAL NUMBER OF GIRDERS AND TOTAL WEIGHT 1 (IN METRIC TON)							0.512

BAR BENDING SCHEDULE FOR END CROSS GIRDERS

BAR ID	SKETCH (mm)	SPACING (mm)	Ø OF BARS (mm)	NO. OF BARS	LENGTH (m)	WEIGHT/LENGTH (kg/m)	TOTAL WEIGHT (kg)
EC1	400 14045 400	@ 92 c/c	25	4	14.845	3.853	228.813
EC2	14045 400 400	varies(@ 138 c/c, @ 276 c/c)	25	5	14.845	3.853	286.016
EC3	2*60 1210 310	@ 200 c/c	10	72	3.160	0.617	140.275
EC4	14070 2X5 Nos each Face	0	10	10	14.070	0.617	86.747
TOTAL WEIGHT IN 1GIRDER(in kg)							741.851
TOTAL NUMBER OF GIRDERS AND TOTAL WEIGHT 2 (IN METRIC TON)							1.484

BAR BENDING SCHEDULE OF **FOOTPATH**

BAR ID	SHAPE OF BAR IN mm (NOT TO SCALE)	SPACING (MM)	Ø OF BARS (mm)	NO. OF BARS	LENGTH (m)	WEIGHT/LENGTH (kG/m)	TOTAL WEIGHT (kG)
FP1	2320 2*100 400	150	12	152	5.640	0.888	761.107
AS2	22610	150	10	21	22.610	0.617	292.739
ONE SIDE							1053.846
TOTAL WEIGHT IN METRIC TON							1.054

Government of Nepal Ministry of Physical Infrastructure and Transport **Department of Roads** **Project Directorate Office (ADB)** **SASEC Highway Improvement Project-** **Project Preparatory Consultant (SHIP-PPC)** **ADB Loan No: 3722-NEP**	**CONSULTANT:** Soosung Engineering Co. Ltd, Korea in association with ERMC P (Ltd) and TIC-Tech Studio of Engineeering Nepal	**ROAD NAME:** **East West Highway (H01)** Butwal - Gorusinghe Section	**SHEET TITLE:** B.B.S of Slab & Main Girder of **Satgadi-1 Bridge** (46/H001/292_A)	**SCALE:** As Shown		**NAME**	**SIGNATURE**	**REV NO.**	**DESCRIPTION**	**DATE:** Sep,2022
					Designed by:	Saroj Bhattarai				**DWG.NO.:** 292_Satgadi-1
					Checked by:	P. Upadhyaya				
					Approved by:	Dr. T.H.Choi				**SHEET NO.:** 10/28

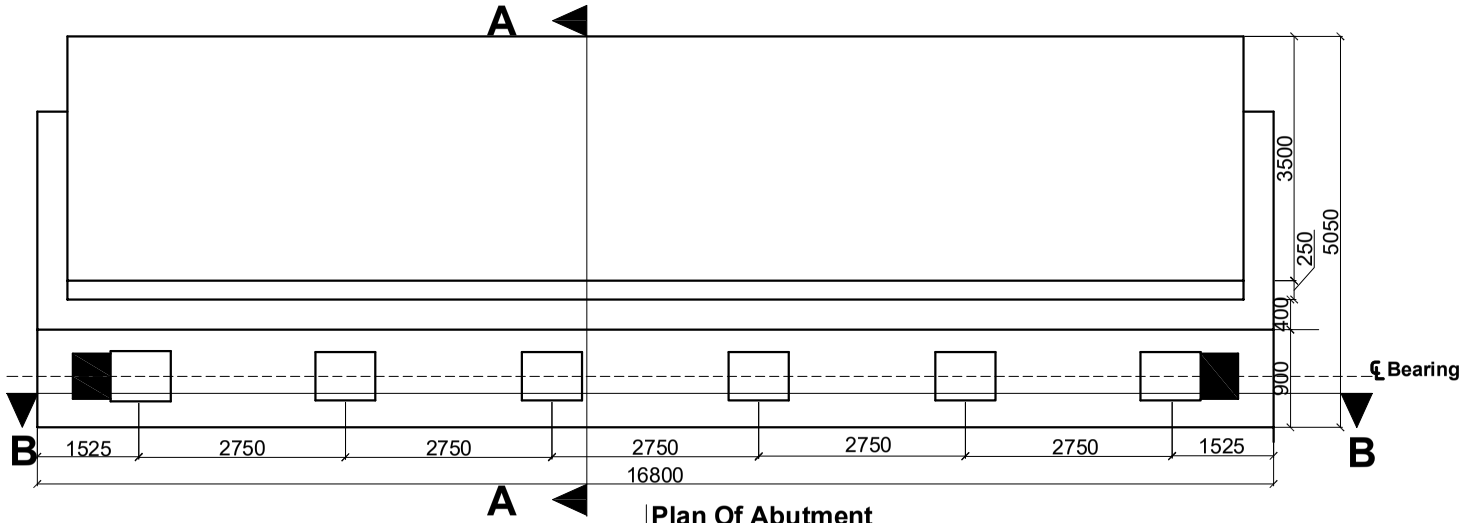

Plan Of Abutment
Scale:-1:100

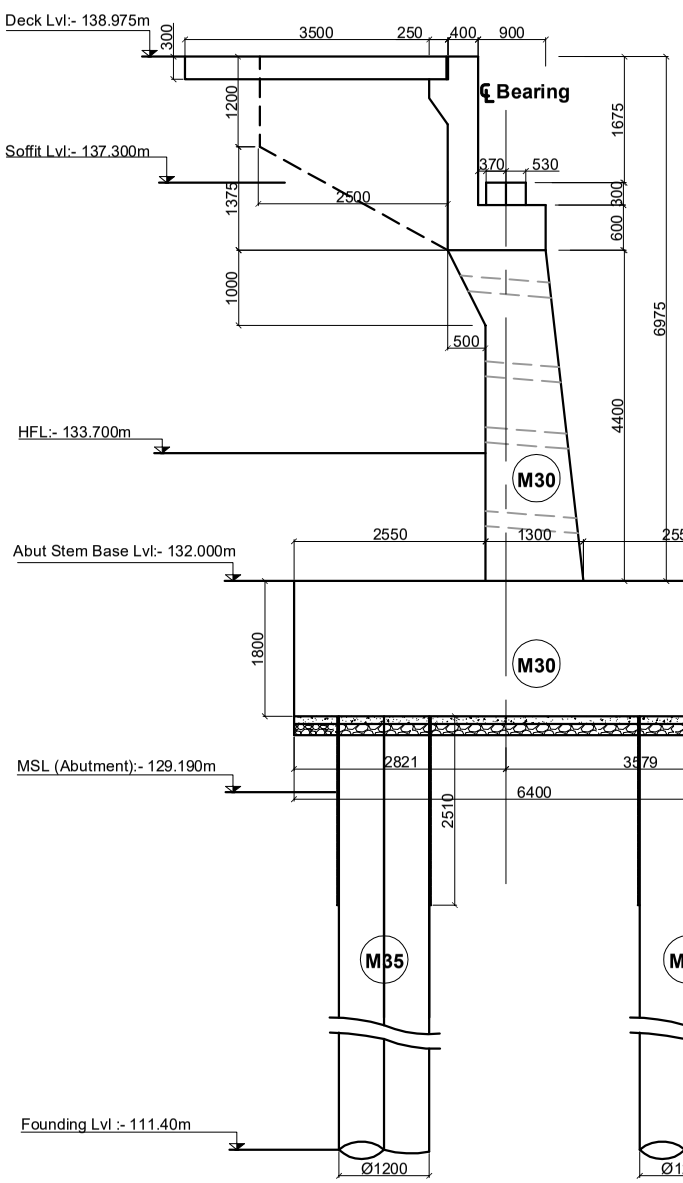

Section of Abutment At (A-A)
Scale:-1:100

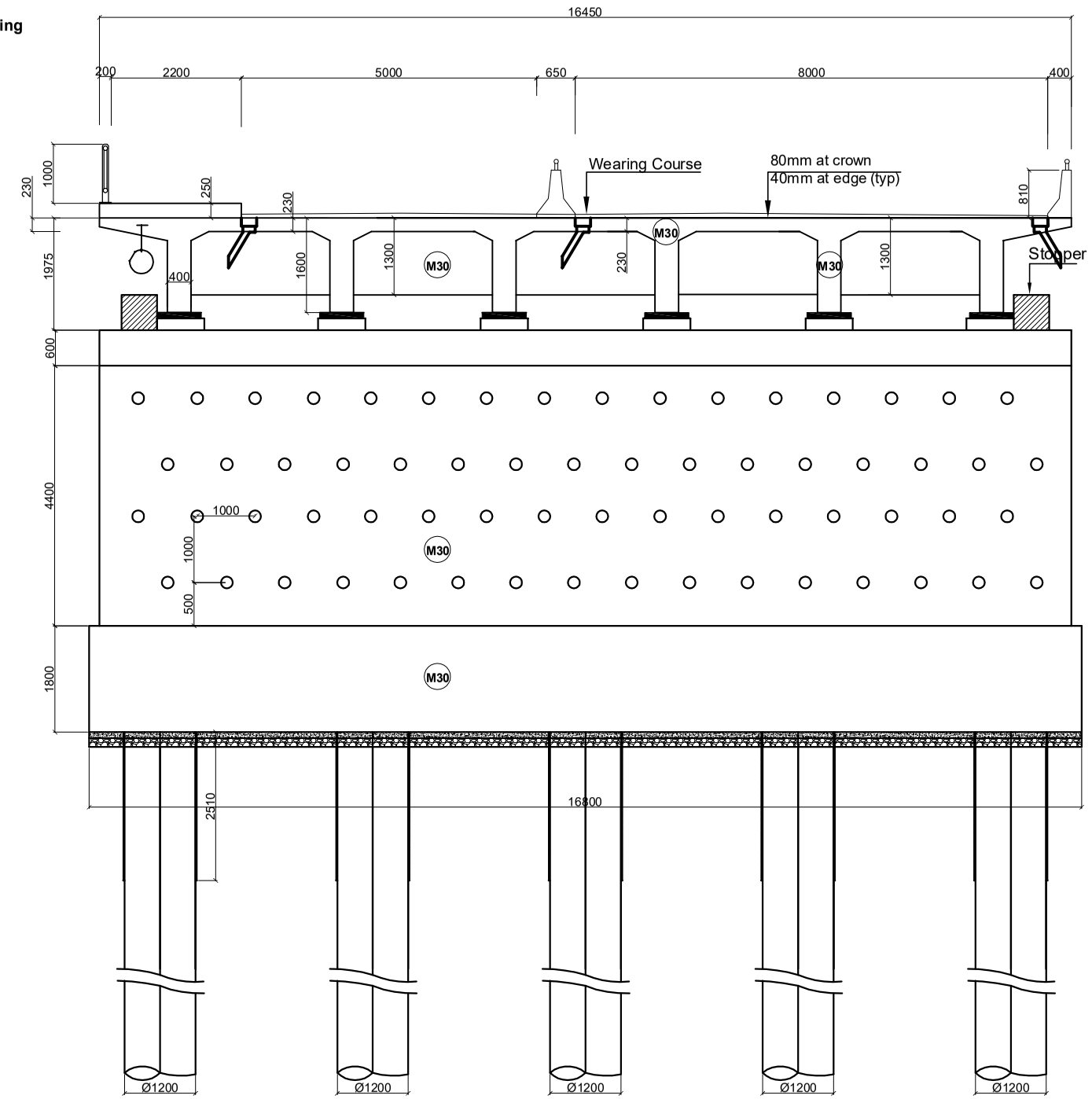

Section Of Abutment At (B-B)
Scale:-1:100

Government of Nepal Ministry of Physical Infrastructure and Transport **Department of Roads** **Project Directorate Office (ADB)** **SASEC Highway Improvement Project-** **Project Preparatory Consultant (SHIP-PPC)** **ADB Loan No: 3722-NEP**	**CONSULTANT:** Soosung Engineering Co. Ltd, Korea in association with ERMC P (Ltd) and TE-Tech Studio of Engineeering Nepal	**ROAD NAME:** **East West Highway (H01)** Butwal - Gorusinghe Section	**SHEET TITLE:** Plan of Abutment of **Satgadi-1 Bridge** (46/H001/292_A)	**SCALE:** As Shown		**NAME**	**SIGNATURE**	**REV NO.**	**DESCRIPTION**	**DATE:** Sep,2022
					Designed by:	Saroj Bhattarai				**DWG.NO.:** 292_Satgadi-1
					Checked by:	P. Upadhyaya				**SHEET NO.:** 11/28
					Approved by:	Dr. T.H.Choi				

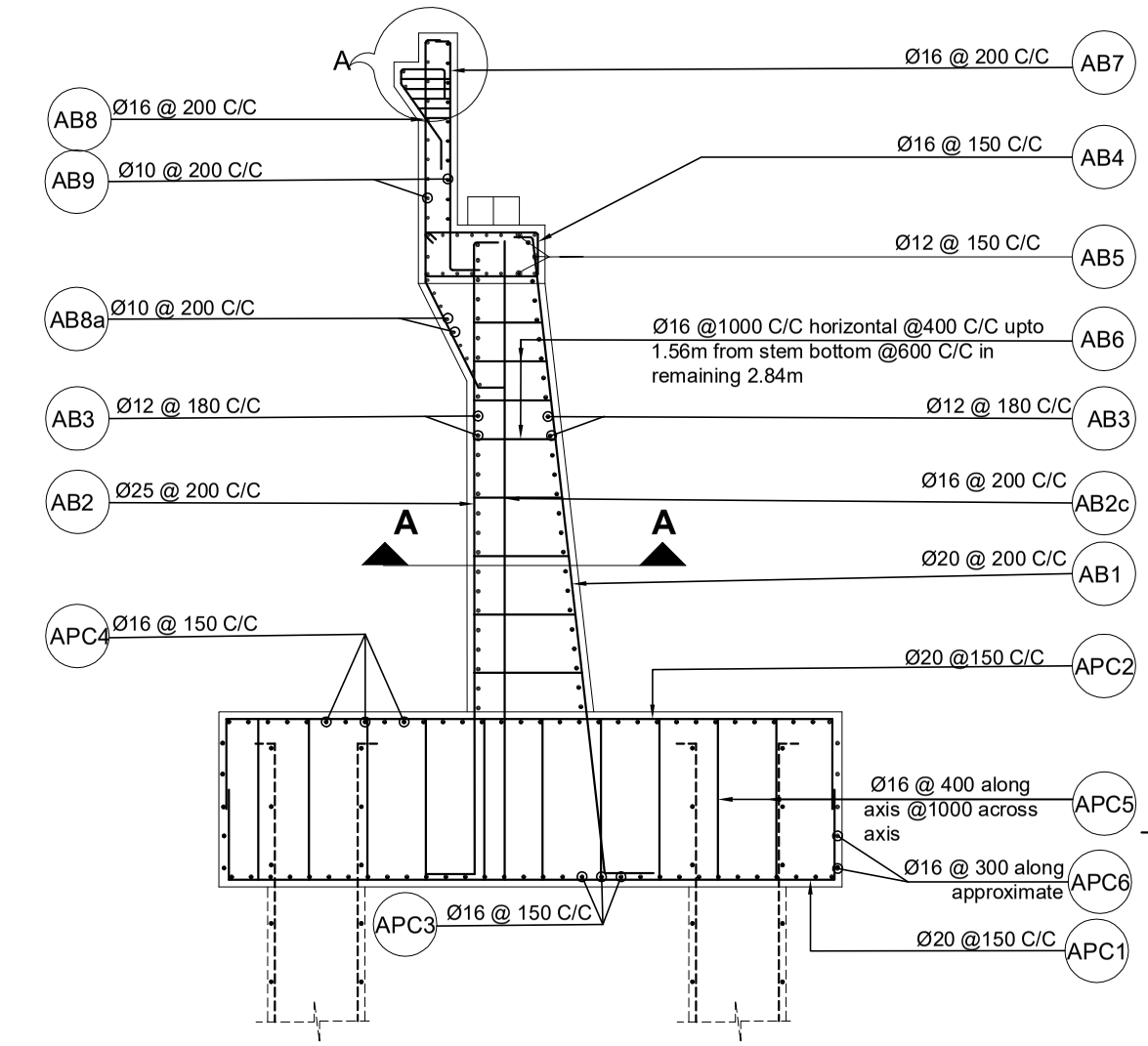

Reinforcement Details of Abutment
Scale:-1:75

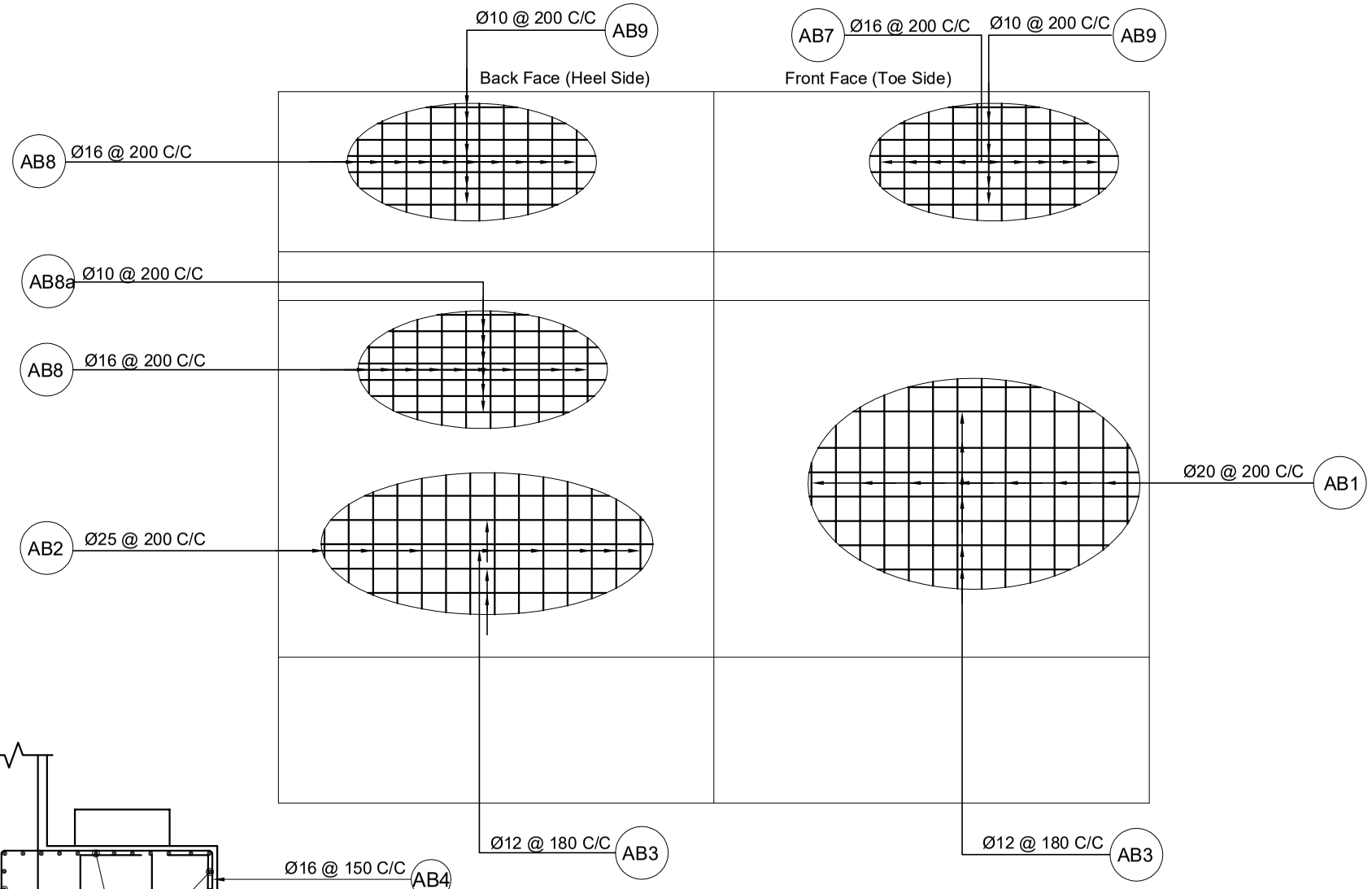

Reinforcement Details of Abutment
Scale:-1:75

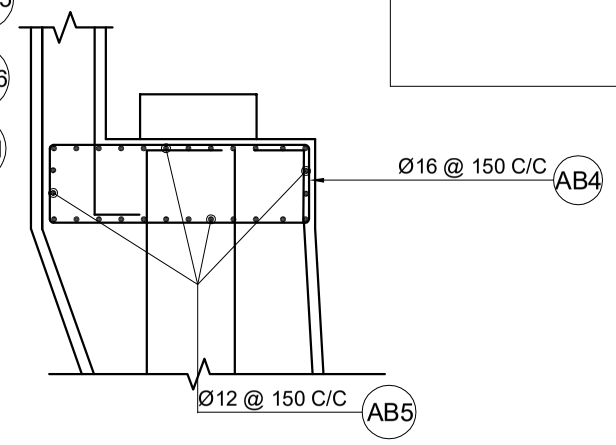

Reinforcement Details Of Abutment
Scale:-1:50

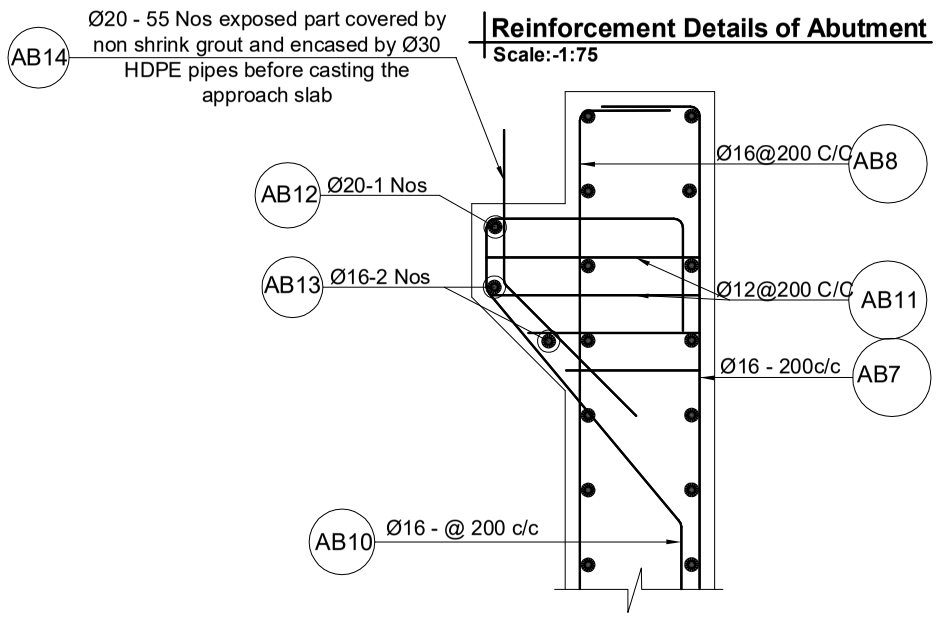

Detail at -A
Scale:-1:20

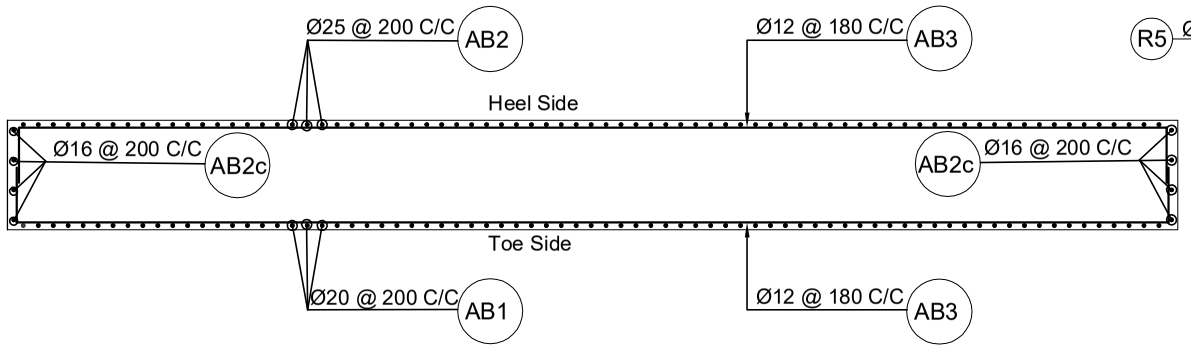

Section at A-A
Scale:-1:75

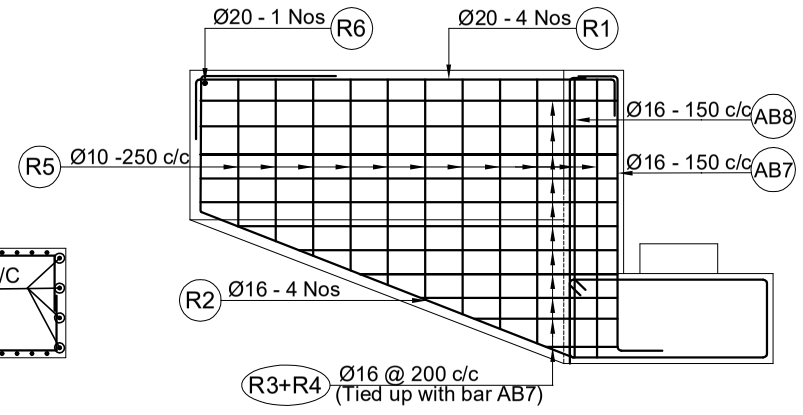

Reinforcement Details of Wingwall
Scale:-1:50

Government of Nepal Ministry of Physical Infrastructure and Transport **Department of Roads** **Project Directorate Office (ADB)** **SASEC Highway Improvement Project-** **Project Preparatory Consultant (SHIP-PPC)** **ADB Loan No: 3722-NEP**	**CONSULTANT:** Soosung Engineering Co. Ltd, Korea in association with ERMC P (Ltd) and TSC-Tech Studio of Engineeering Nepal	**ROAD NAME:** **East West Highway (H01)** Butwal - Gorusinghe Section	**SHEET TITLE:** Reinforcement Details of Abutment of **Satgadi-1 Bridge** (46/H001/292_A)	**SCALE:** As Shown		**NAME**	**SIGNATURE**	**REV NO.**	**DESCRIPTION**	**DATE:** Sep,2022
					Designed by:	Saroj Bhattarai				**DWG.NO.:** 292_Satgadi-1
					Checked by:	P. Upadhyaya				
					Approved by:	Dr. T.H.Choi				**SHEET NO.:** 12/28

BAR BENDING SCHEDULE OF ABUTMENT

BAR ID	SHAPE OF BAR IN mm (NOT TO SCALE)	SPACING (mm)	Ø OF BARS (mm)	NO. OF BARS	LENGTH (m)	WEIGHT/LENGTH (Kg/m)	TOTAL WEIGHT (Kg)
AB1	300 6590 500	200 mm c/c Approx	20	83	7.390	2.466	1512.666
AB1a	0 0	-	-	-	-	-	-
AB2	500 6590 500	200 mm c/c Approx	25	83	7.590	3.853	2427.507
AB2c	6590 500	At sideface 200 mm c/c	16	12	7.090	1.578	134.285
AB3	avg.850 16290	180 mm c/c Approx	12	52	34.280	0.888	1582.586
AB4	avg.1135 515 2*100	150 mm c/c Approx	16	111	3.500	1.578	613.185
AB5	16300	150 mm c/c Approx	12	22	16.300	0.888	318.371
AB6	1135-835 Hook Length 160 1000 mm C/C horizontal 500 mm C/Cvertical upto 1.56m from stem bottom 600 mm C/C vertical at remaining 2.84 m		16	154	1.333	1.578	324.005
AB7	250 2575 300	200 mm c/c Approx	16	83	3.125	1.578	409.382
AB8	2500 250 1118 300	200 mm c/c Approx	16	83	4.168	1.578	546.017
AB8a	16300	200 mm c/c Approx	10	7	16.300	0.617	70.347
AB9	16290 268	200 mm c/c Approx	10	11	33.116	0.617	224.590
AB10	100 500 300 647 200	200 mm c/c Approx	16	79	1.747	1.578	217.831
AB11	500 200		12	158	0.900	0.888	126.247
AB11a	250 Average 200		12	158	0.650	0.888	91.179
AB12	16300		20	1	16.300	2.466	40.198
AB13	16300		16	2	16.300	1.578	51.454
AB14	400 500		20	55	0.900	2.466	122.075
TOTAL WEIGHT ABUTMENT KG							8811.925
TOTAL WEIGHT (IN METRIC TON)							8.812

BAR BENDING SCHEDULE FOR WINGWALL

BAR ID	SHAPE OF BAR IN mm (NOT TO SCALE)	SPACING (mm)	Ø OF BARS (mm)	NO. OF BARS	LENGTH (m)	WEIGHT/LENGTH (Kg/m)	TOTAL WEIGHT (Kg)
R1	400 2807 1200	0	20	8	4.407	2.466	86.947
R2	1107 300 2855	0	16	8	4.262	1.578	53.815
R3	214 2714 2*150	200	16	12	6.156	1.578	116.595
R4	214 avg.1350 2*150	200	16	14	3.428	1.578	75.748
R5	182 avg.1888	250	10	22	4.440	0.617	60.224
R6	307	0	20	2	0.307	2.466	1.514
R7	2800	0	10	4	2.800	0.617	6.905
R8	260 350	0	10	15	1.320	0.617	12.207
TOTAL IN 2 WINGWALL IN ONE ABUTMENT							413.955
TOTAL WEIGHT (IN METRIC TON)							0.414

BAR BENDING SCHEDULE FOR ABUTMENT PILES

BAR ID	SHAPE OF BAR IN mm (NOT TO SCALE)	SPACING (mm)	Ø OF BARS (mm)	NO. OF BARS	LENGTH (m)	WEIGHT/LENGTH (Kg/m)	TOTAL WEIGHT (Kg)
AP1a	200 Full Length Bars 20405		25	11	20.610	3.853	873.597
AP1b	200 Curtailed bars 13700		25	11	13.900	3.853	589.180
AP2	Dia-1038,Pitch-150 for critical zone 12m From Bottom of pile cap	150	12	1	263.590	0.888	234.019
AP3	Dia-1038,Pitch-200 inside pile cap 200 Below Critical Zone	200	12	1	141.140	0.888	125.306
TOTAL IN ONE PILE IN ONE ABUTMENT							1822.103
TOTAL (IN METRIC TON)							1.822
TOTAL IN 10 PILES OF ONE ABUTMENT (IN METRIC TON)							18.221

Government of Nepal
Ministry of Physical Infrastructure and Transport
Department of Roads
Project Directorate Office (ADB)
SASEC Highway Improvement Project-
Project Preparatory Consultant (SHIP-PPC)
ADB Loan No: 3722-NEP

CONSULTANT: Soosung Engineering Co. Ltd, Korea in association with ERMC P (Ltd) and TSE-Tech Studio of Engineeering Nepal

ROAD NAME: East West Highway (H01)

Butwal - Gorusinghe Section

SHEET TITLE: Bar Bending Schedule of Abutment of Satgadi-1 Bridge (46/H001/292_A)

SCALE: As Shown

	NAME	SIGNATURE	REV NO.	DESCRIPTION
Designed by:	Saroj Bhattarai			
Checked by:	P. Upadhyaya			
Approved by:	Dr. T.H.Choi			

DATE: Sep,2022

DWG.NO.: 292_Satgadi-1

SHEET NO.: 13/28

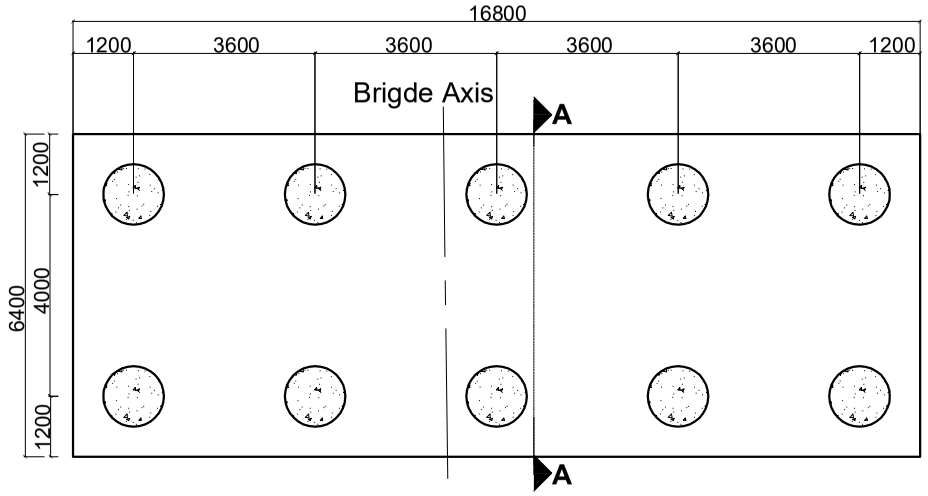

Plan of Abutment Piles
Scale:-1:150

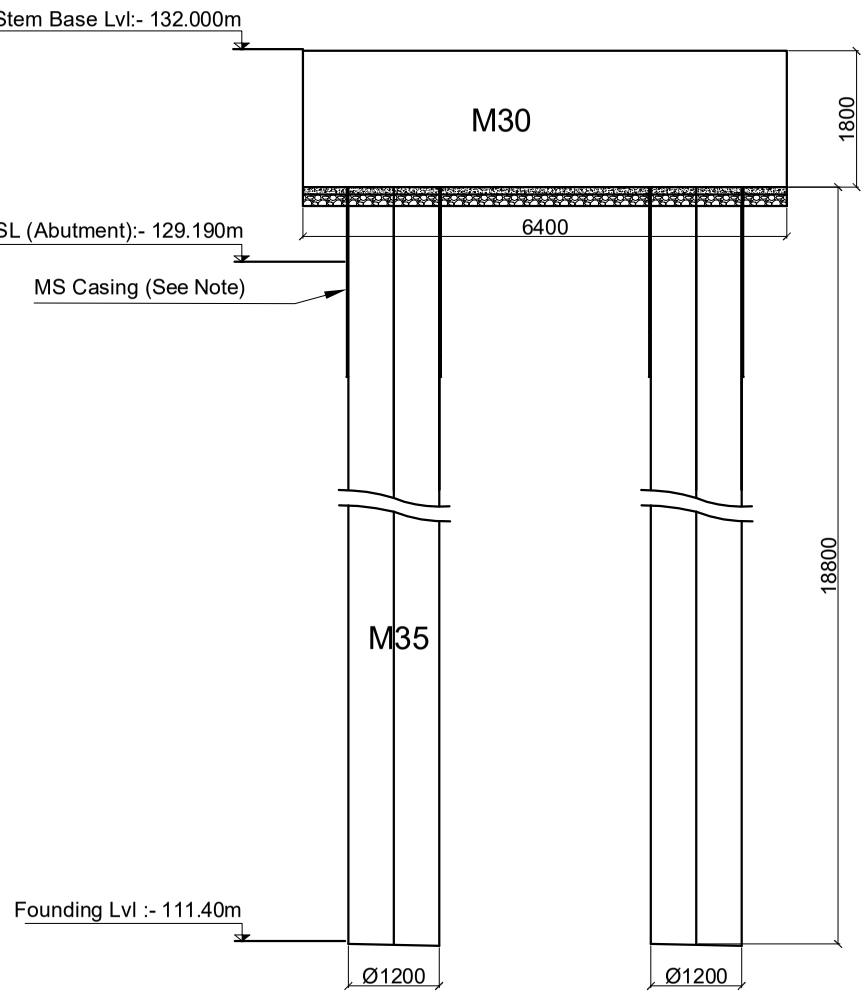

Piles Section At A-A
Scale:-1:100

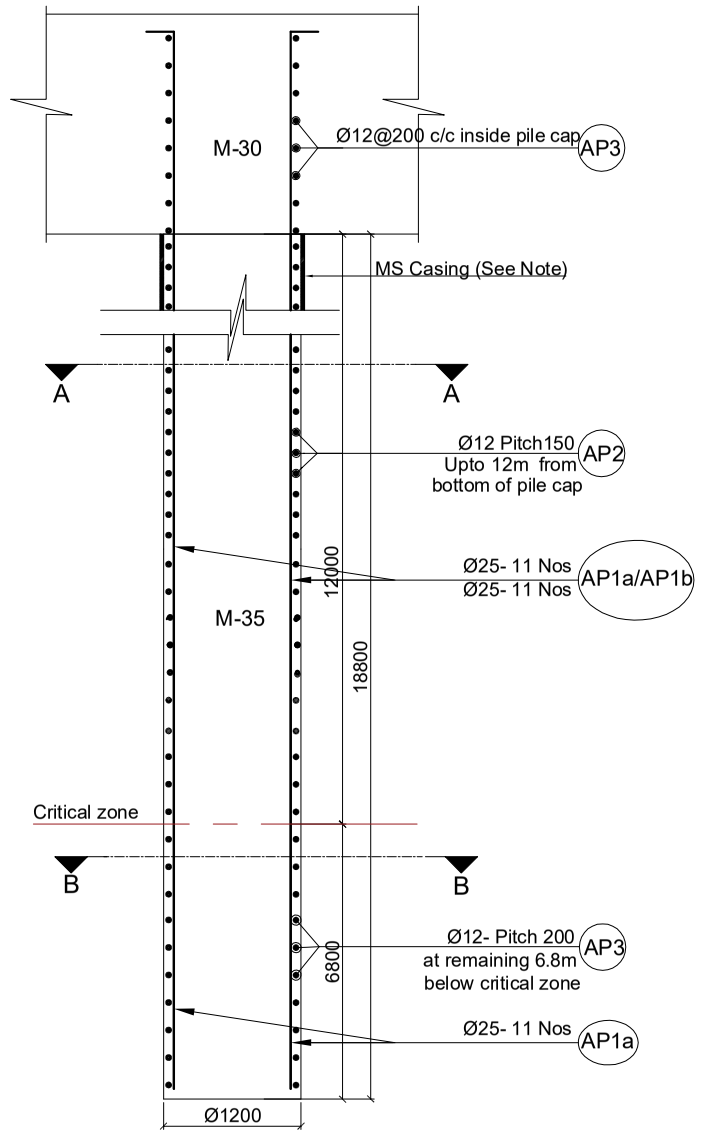

Reinforcement Details of Pile
Scale:-1:50

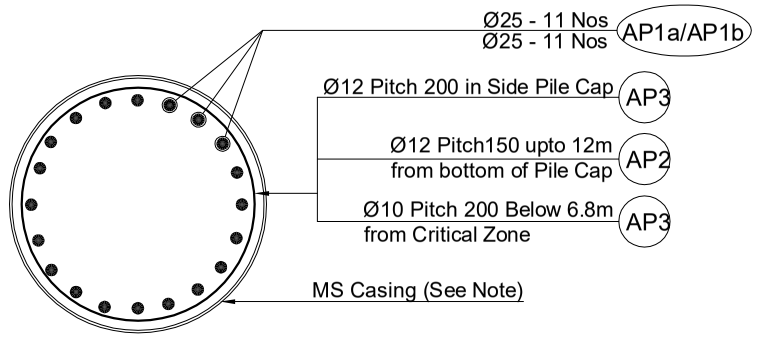

Section at A-A
Scale:-1:30

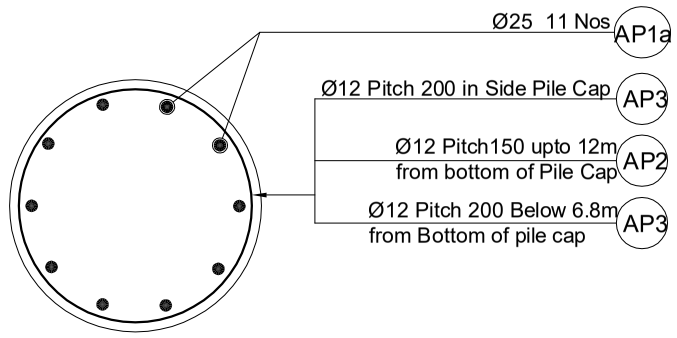

Section at B-B
Scale:-1:30

Location	Design Pile Length m	Design Working load on pile (non - seismic casse)kn	Allowable Bearing Capacity on pile (Scour case) kn	Allowable Bearing Capacity of the Pile (Non Scour case)kn
Abutment	18.8	1724	2243	2371
Pier	17.1	1102	1630	1841

Note On MS permament casing on piles: In case piling works are done without temporary casing, the piles shall be lined with 6mm thick MS steel permanent casing up to 1.5 m or 0.5m below MSL whichever is larger (Subject to instruction and approval by the Engineer)

For Construction Methology and Sequence Please See General Notes.

Government of Nepal Ministry of Physical Infrastructure and Transport **Department of Roads** **Project Directorate Office (ADB)** **SASEC Highway Improvement Project-** **Project Preparatory Consultant (SHIP-PPC)** **ADB Loan No: 3722-NEP**	**CONSULTANT:** Soosung Engineering Co. Ltd, Korea in association with ERMC P (Ltd) and TTE-Tech Studio of Engineeering Nepal	**ROAD NAME:** **East West Highway (H01)** Butwal - Gorusinghe Section	**SHEET TITLE:** Reinforcement Details of Abutment Piles of **Satgadi-1 Bridge** (46/H001/292_A)	**SCALE:** As Shown		**NAME**	**SIGNATURE**	**REV NO.**	**DESCRIPTION**	**DATE:** Sep,2022
					Designed by:	Saroj Bhattarai				**DWG.NO.:** 292_ Satgadi
					Checked by:	P. Upadhyaya				
					Approved by:	Dr. T.H.Choi				**SHEET NO.:** 14/28

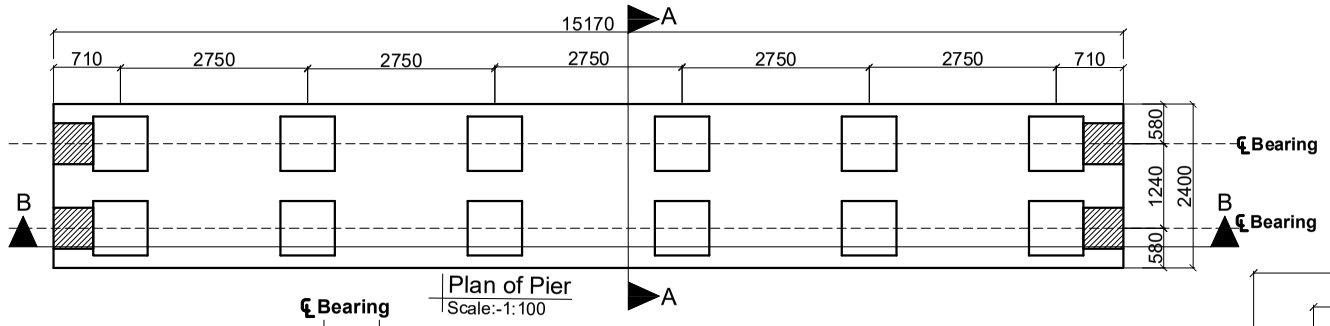

Plan of Pier
Scale:-1:100

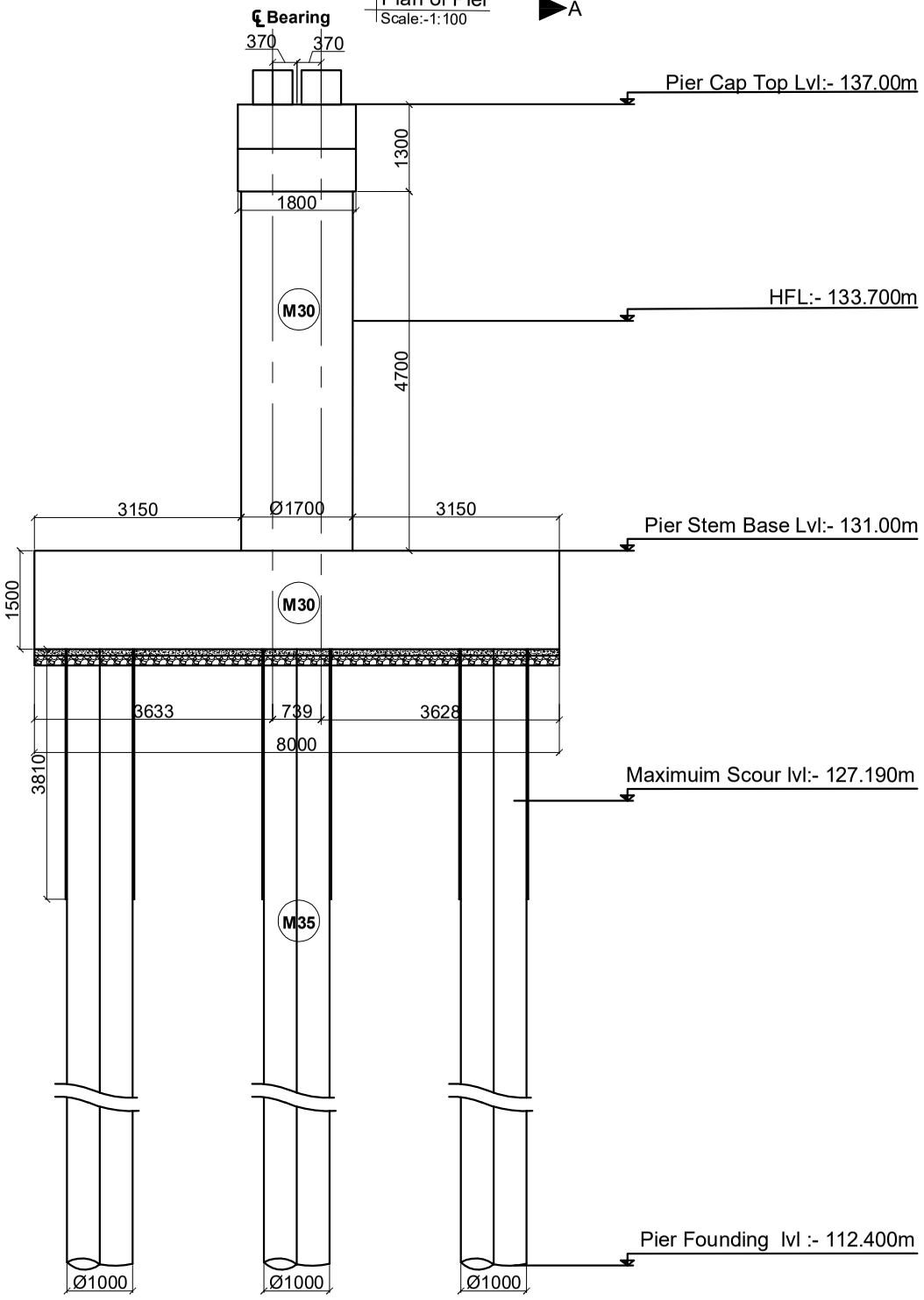

Section of Pier At (A-A)
Scale:-1:100

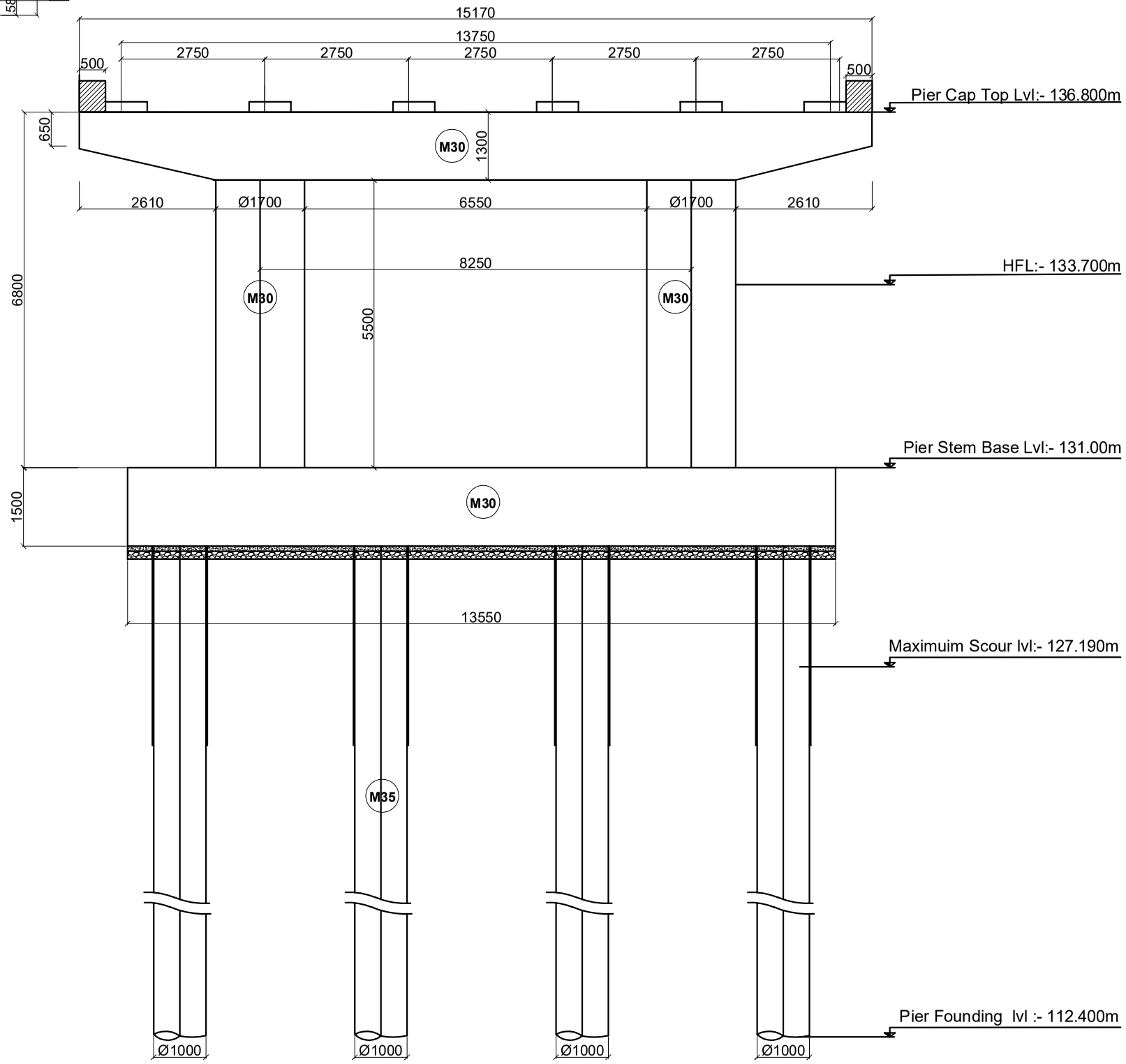

Section of Pier At (B-B)
Scale:-1:100

Government of Nepal Ministry of Physical Infrastructure and Transport **Department of Roads** **Project Directorate Office (ADB)** **SASEC Highway Improvement Project-** **Project Preparatory Consultant (SHIP-PPC)** **ADB Loan No: 3722-NEP**	**CONSULTANT:** Soosung Engineering Co. Ltd, Korea in association with ERMC P (Ltd) and TSC-Tech Studio of Engineeering Nepal	**ROAD NAME:** **East West Highway (H01)** Butwal - Gorusinghe Section	**SHEET TITLE:** Reinforcement Details of Pier Piles of **Satgadi-1 Bridge** (46/H001/292_A)	**SCALE:** As Shown		**NAME**	**SIGNATURE**	**REV NO.**	**DESCRIPTION**	**DATE:** Sep,2022
					Designed by:	Saroj Bhattarai				**DWG.NO.:** 292_ Satgadi
					Checked by:	P. Upadhyaya				
					Approved by:	Dr. T.H.Choi				**SHEET NO.:** 15/28

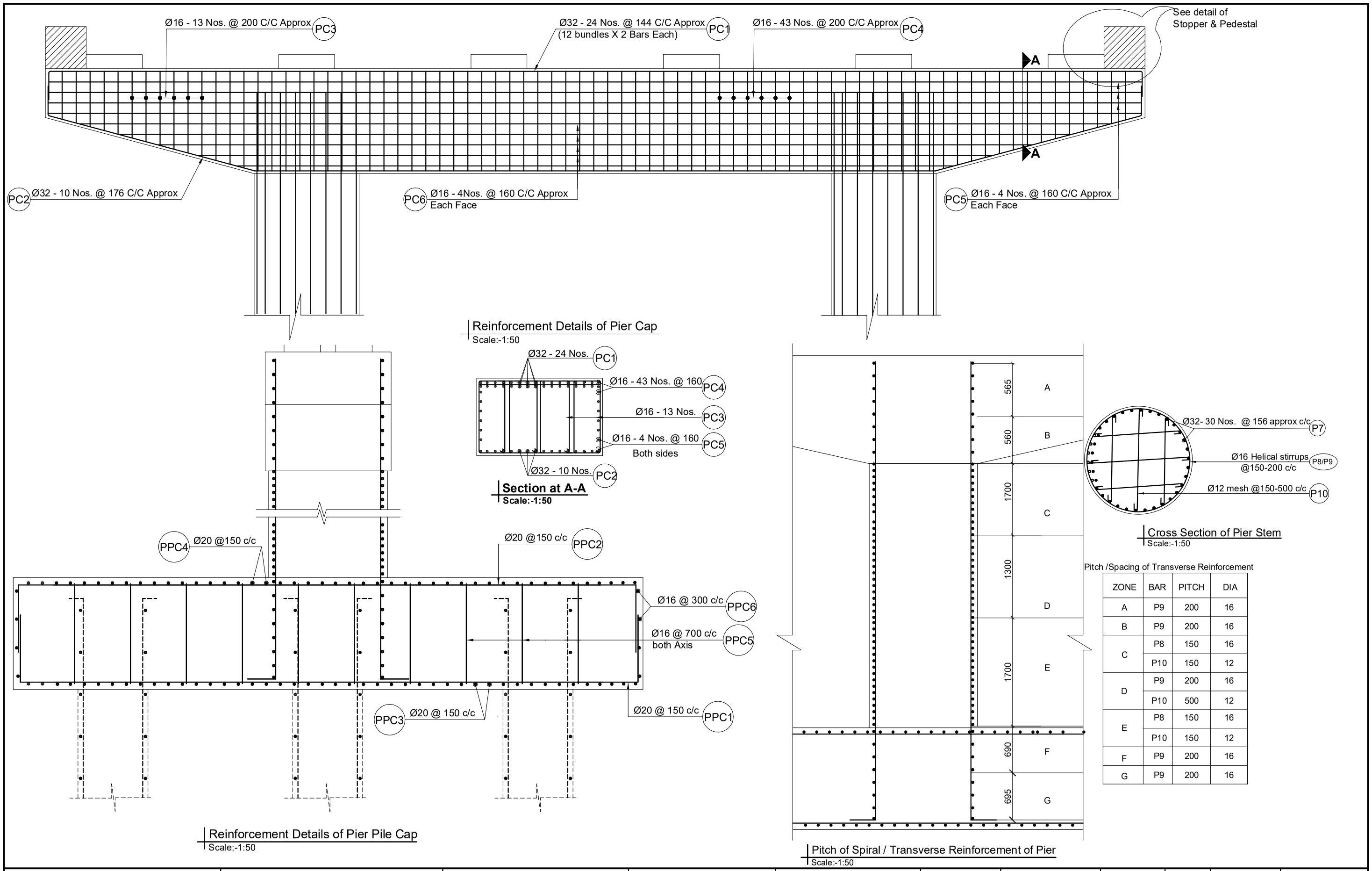

Pitch /Spacing of Transverse Reinforcement

ZONE	BAR	PITCH	DIA
A	P9	200	16
B	P9	200	16
C	P8	150	16
	P10	150	12
D	P9	200	16
	P10	500	12
E	P8	150	16
	P10	150	12
F	P9	200	16
G	P9	200	16

Government of Nepal Ministry of Physical Infrastructure and Transport **Department of Roads** **Project Directorate Office (ADB)** **SASEC Highway Improvement Project-** **Project Preparatory Consultant (SHIP-PPC)** **ADB Loan No: 3722-NEP**	**CONSULTANT:** Soosung Engineering Co. Ltd, Korea in association with ERMC P (Ltd) and TSC-Tech Studio of Engineeering Nepal	**ROAD NAME:** **East West Highway (H01)** Butwal - Gorusinghe Section	**SHEET TITLE:** Reinforcement Details of Pier of **Satgadi-1 Bridge** (46/H001/292_A)	**SCALE:** As Shown		**NAME**	**SIGNATURE**	**REV NO.**	**DESCRIPTION**	**DATE:** Sep,2022
					Designed by:	Saroj Bhattarai				**DWG.NO.:** 292_ Satgadi
					Checked by:	P. Upadhyaya				**SHEET NO.:** 16/28
					Approved by:	Dr. T.H.Choi				

BAR BENDING SCHEDULE FOR PIER PILE CAP

BAR ID	SHAPE OF BAR IN mm (NOT TO SCALE)	SPACING (mm)	Ø OF BARS (mm)	NO. OF BARS	LENGTH (m)	WEIGHT/LENGTH (Kg/m)	TOTAL WEIGHT (Kg)
PPC1	13380 900	200	20	54	15.180	2.466	2021.557
PPC2	13380 900	200	20	54	15.180	2.466	2021.557
PPC3	7830 900	300	20	91	9.630	2.466	2161.166
PPC4	7830 900	200	20	91	9.630	2.466	2161.166
PPC5	1270 Curve length = 251 Curve radius = 40 Hook length = 80	800	16	273	1.932	1.578	832.473
		700 C/C along/Across Axis					
PPC6	7850 13400 Peripheral Reinforcement	300	16	4	42.500	1.578	268.318
TOTAL IN PILE OF **PIER PILE CAP**							9466.239
TOTAL WEIGHT (IN METRIC TON)							9.466

BAR BENDING SCHEDULE FOR PIER CAP

BAR ID	SHAPE OF BAR IN mm (NOT TO SCALE)	SPACING (mm)	Ø OF BARS (mm)	NO. OF BARS	LENGTH (m)	WEIGHT/LENGTH (Kg/m)	TOTAL WEIGHT (Kg)
PC1	13540 550	144	32	12	14.640	6.313	1109.131
			32	12	14.640	6.313	1109.131
		12 bundles x 2 bars each					
PC2	2615 9800 550	176	32	10	16.130	6.313	1018.345
PC3	3x650 6 legs H varies 485-1135	200	16	26	9.360	1.578	384.105
		3 overlapping rings of length 650 each					
PC4	1135 3x650 6 legs Hooks 100	200	16	43	11.310	1.578	767.594
		3 overlapping rings of length 650 each					
PC5	13585 1635 Hooks 100	160	16	4	30.640	1.578	193.441
PC6	L varies 13585-9800 1635 Hooks 100	160	16	4	average 26.860	1.578	169.577
TOTAL IN **PIER CAP**							4751.324
TOTAL WEIGHT (IN METRIC TON)							4.751

BAR BENDING SCHEDULE FOR PIER STEM

BAR ID	SHAPE OF BAR IN mm (NOT TO SCALE)	SPACING (mm	Ø OF BARS (mm)	NO. OF BARS	LENGTH (m)	WEIGHT/LENGTH (Kg/m)	TOTAL WEIGHT (Kg)
PC7	156 c/c Approx 7260 400	156	32	30	8.060	6.313	1526.570
PC8	Dia-1534,Pitch-125 At Critical zone	125	16	1	110.360	1.578	174.186
PC9	Dia-1534,Pitch-200 At Non-Critical zone	200	16	1	93.180	1.578	147.070
PC10	125 C/C at critical zone 500 C/C at non-critical zone	125-500	12	27	8.820	0.888	211.425
TOTAL IN PILE OF **PIER STEM**							2059.250
TOTAL (IN METRIC TON)							2.059

Government of Nepal Ministry of Physical Infrastructure and Transport **Department of Roads** **Project Directorate Office (ADB)** **SASEC Highway Improvement Project-** **Project Preparatory Consultant (SHIP-PPC)** **ADB Loan No: 3722-NEP**	**CONSULTANT:** Soosung Engineering Co. Ltd, Korea in association with ERMC P (Ltd) and TSC-Tech Studio of Engineeering Nepal	**ROAD NAME:** **East West Highway (H01)** Butwal - Gorusinghe Section	**SHEET TITLE:** BBE Schedule of Pier of **Satgadi-1 Bridge** (46/H001/292_A)	**SCALE:** As Shown		**NAME**	**SIGNATURE**	**REV NO.**	**DESCRIPTION**	**DATE:** Sep,2022
					Designed by:	Saroj Bhattarai				**DWG.NO.:** 292_ Satgadi
					Checked by:	P. Upadhyaya				
					Approved by:	Dr. T.H.Choi				**SHEET NO.:** 17/28

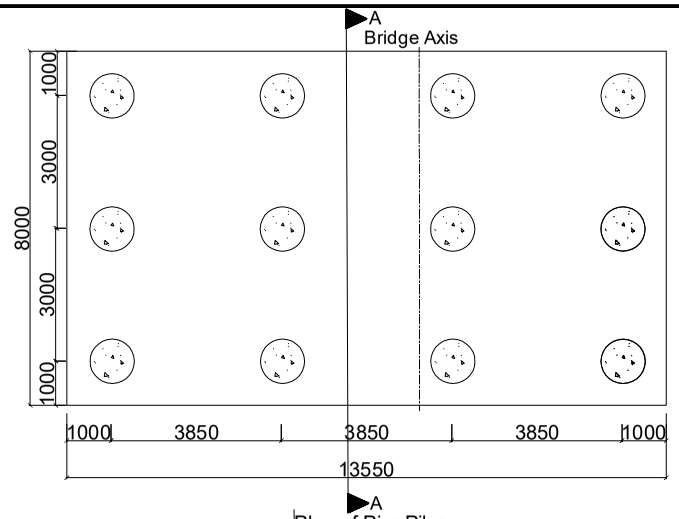

Plan of Pier Piles
Scale:-1:150

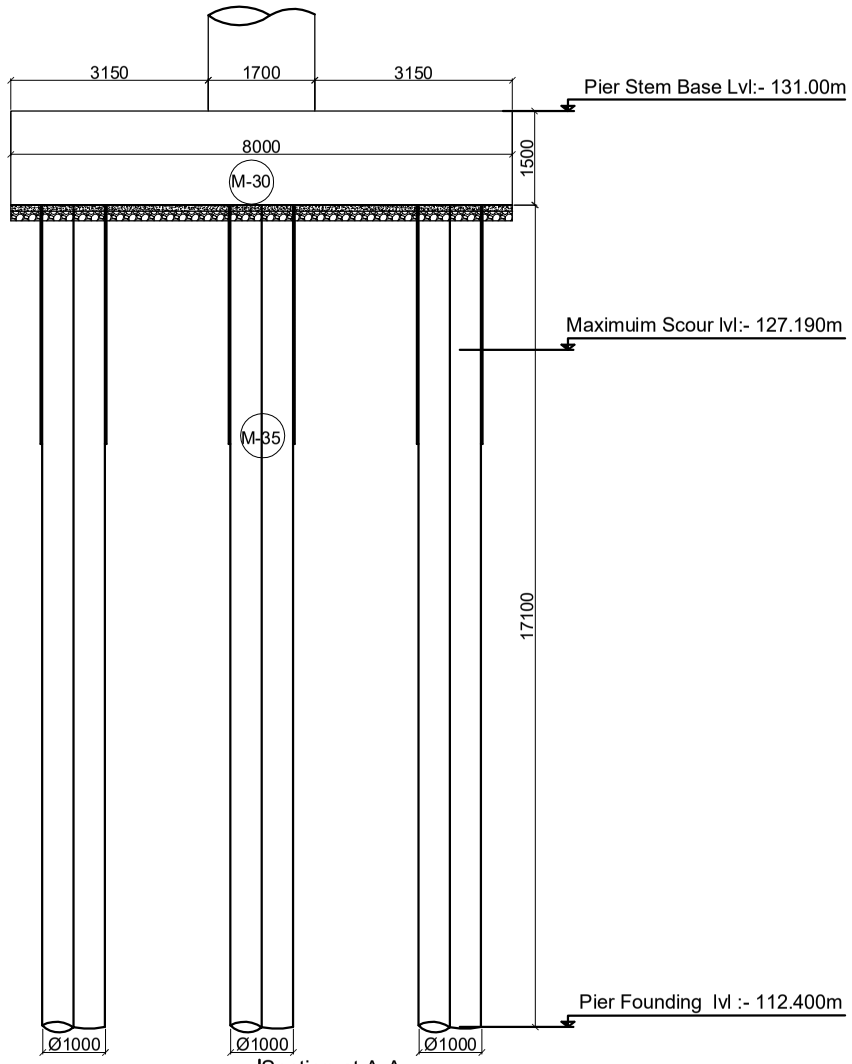

Section at A-A
Scale:-1:100

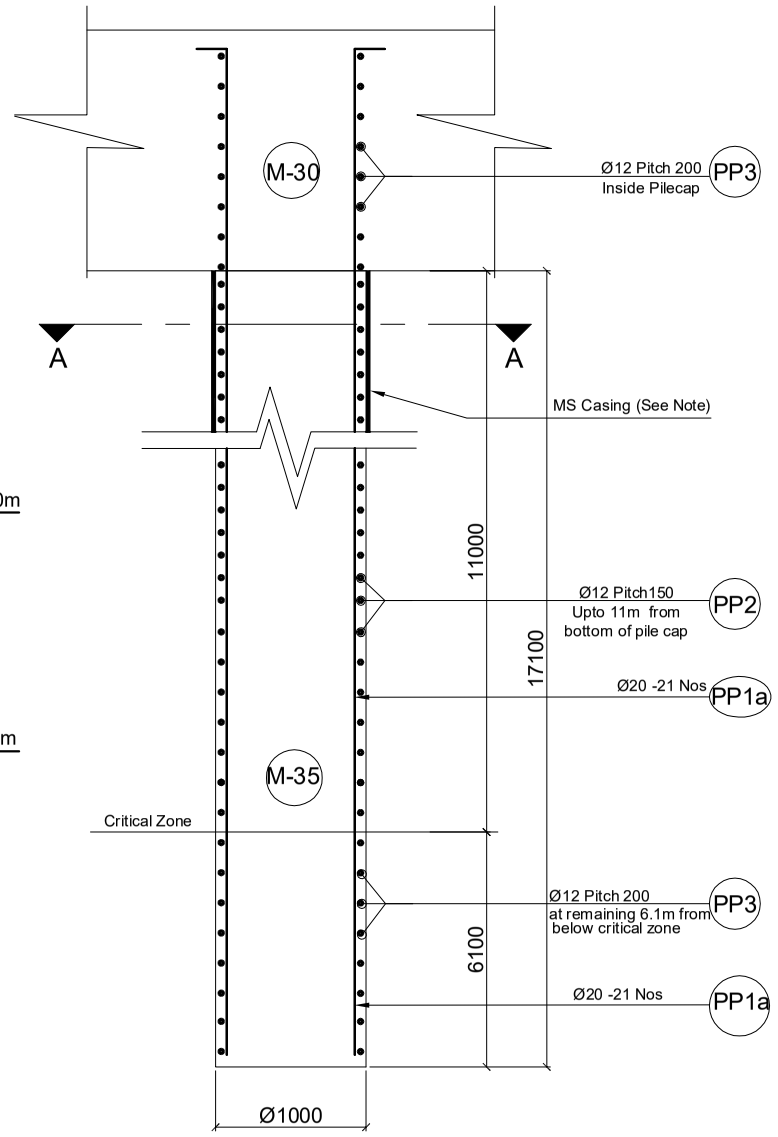

Reinforcement Details of Pile
Scale:-1:50

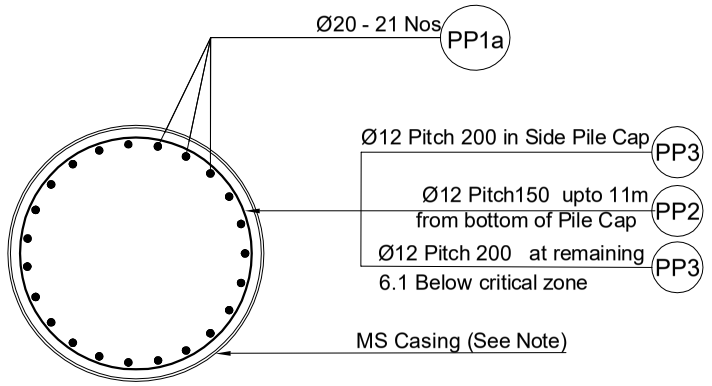

Section at A-A
Scale:-1:30

BAR BENDING SCHEDULE FOR PIER PILES

BAR ID	SHAPE OF BAR IN mm (NOT TO SCALE)	SPACING (mm)	Ø OF BARS (mm)	NO. OF BARS	LENGTH (m)	WEIGHT/LENGTH (kg/m)	TOTAL WEIGHT (kg)
PP1a	200 Full length bars 18400		20	21	18.600	2.466	963.281
PP1b	0 Curtailed bars 0		0	0	0.000	0.000	0.000
PP2	Dia-838,Pitch-150 11 m from bottom of pile cap	150	12	1	196.100	0.888	174.101
PP3	Dia-838,Pitch-200 Inside pile cap 200 Belo Crictical Zone	200	12	1	101.500	0.888	90.113
TOTAL IN ONE PILE IN 1 PIER							1227.495
TOTAL (IN METRIC TON)							1.227
TOTAL FOR 12 PILES IN ONE PIER (IN METRIC TON)							15

Location	Design Pile Length m	Design Working load on pile (non - seismic casse)kn	Allowable Bearing Capacity on pile (Scour case) kn	Allowable Bearing Capacity of the Pile (Non Scour case)kn
Abutment	18.8	1724	2243	2371
Pier	17.1	1102	1630	1841

Note On MS permament casing on piles: In case piling works are done without temporary casing, the piles shall be lined with 6mm thick MS steel permanent casing up to 1.5 m or 0.5m below MSL whichever is larger (Subject to instruction and approval by the Engineer)

For Construction Methology and Sequence Please See General Notes.

Government of Nepal
Ministry of Physical Infrastructure and Transport
Department of Roads
Project Directorate Office (ADB)
SASEC Highway Improvement Project-
Project Preparatory Consultant (SHIP-PPC)
ADB Loan No: 3722-NEP

CONSULTANT:
Soosung Engineering Co. Ltd, Korea
in association with
ERMC P (Ltd)
and
TSE-Tech Studio of Engineeering Nepal

ROAD NAME:
East West Highway (H01)
Butwal - Gorusinghe Section

SHEET TITLE:
Reinforcement Details of Pier Piles of
Satgadi-1 Bridge
(46/H001/292_A)

SCALE:
As Shown

	NAME	SIGNATURE	REV NO.	DESCRIPTION
Designed by:	Saroj Bhattarai			
Checked by:	P. Upadhyaya			
Approved by:	Dr. T.H.Choi			

DATE: Sep,2022
DWG.NO.: 292_ Satgadi
SHEET NO.: 18/28

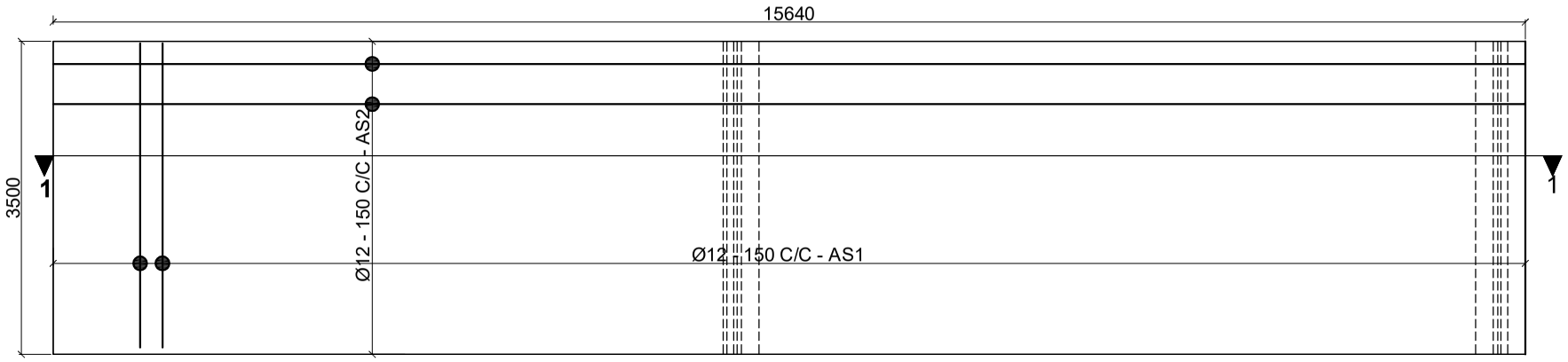

Plan of Reinforcement Details of Approach Slab
Scale:-1:75

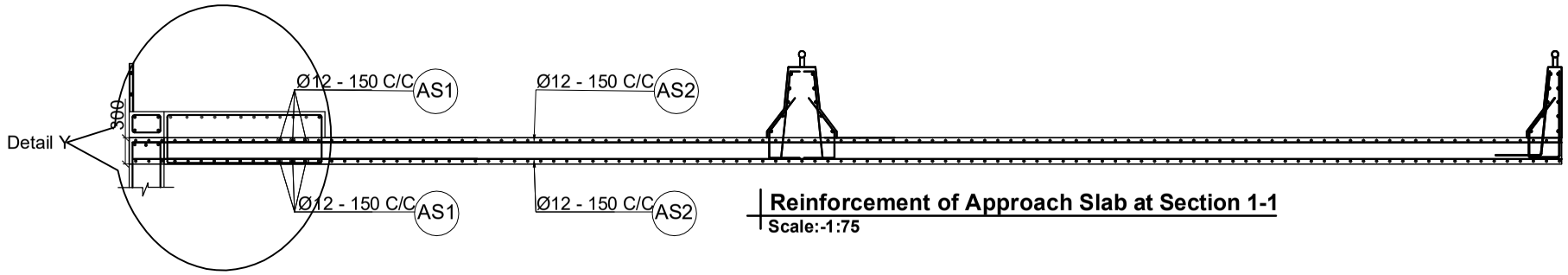

Reinforcement of Approach Slab at Section 1-1
Scale:-1:75

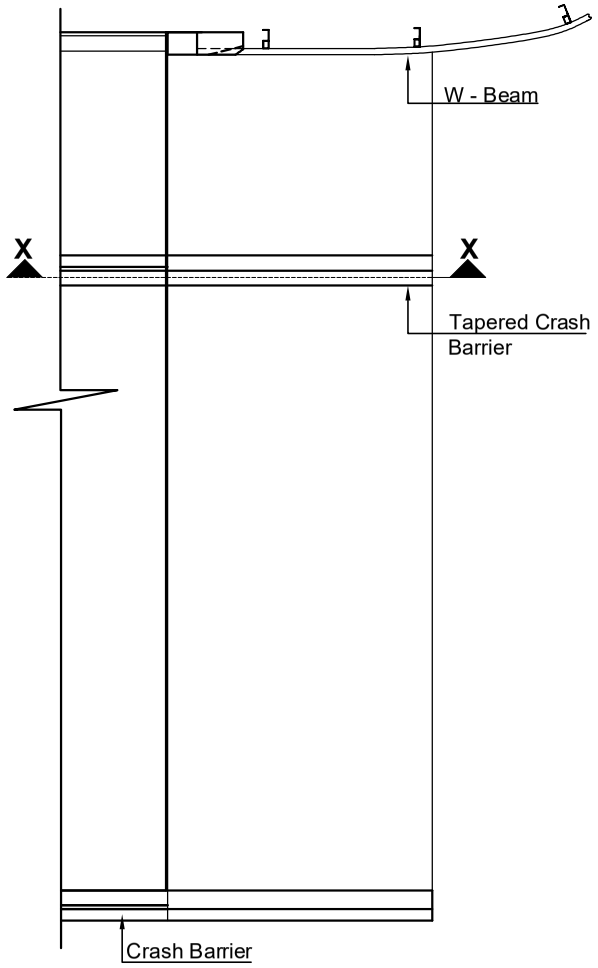

Plan of Approach Slab
Not to Scale

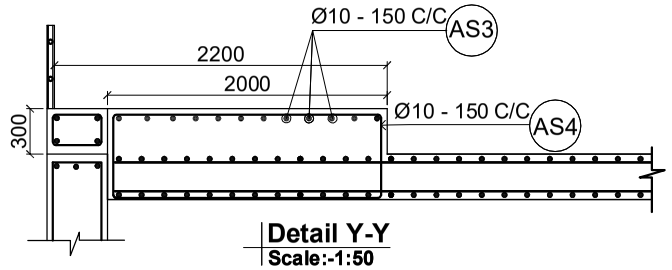

Detail Y-Y
Scale:-1:50

BAR BENDING SCHEDULE OF APPROACH SLAB

BAR ID	SHAPE OF BAR IN mm (NOT TO SCALE)	SPACING (mm)	Ø OF BARS (mm)	NO. OF BARS	LENGTH (m)	WEIGHT/LENGTH (Kg/m)	TOTAL WEIGHT (Kg)
AS1	3400	-	12	210	3.400	0.888	633.901
AS2	15550	-	12	48	15.550	0.888	662.666
AS3	3400		10	15	3.400	0.617	31.443
AS4	1920 / 520		10	18	5.000	0.617	55.489
TOTAL IN ONE APPROACH SLAB							1296.567
TOTAL WEIGHT IN METRIC TON							1.297

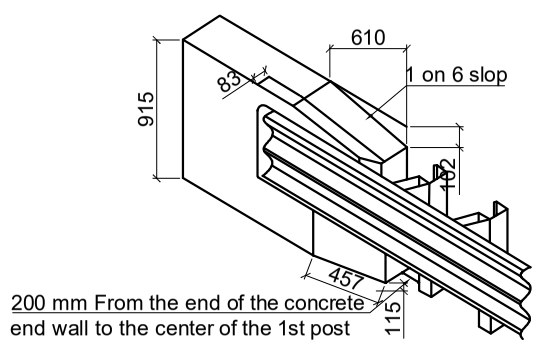

End Block Part Details
Scale:-1:50

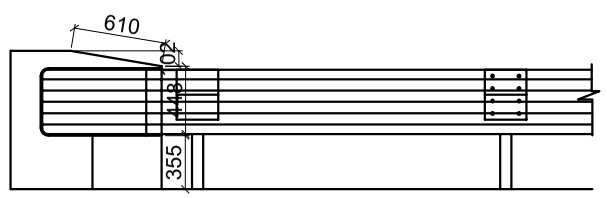

Eleavation
Scale:-1:50

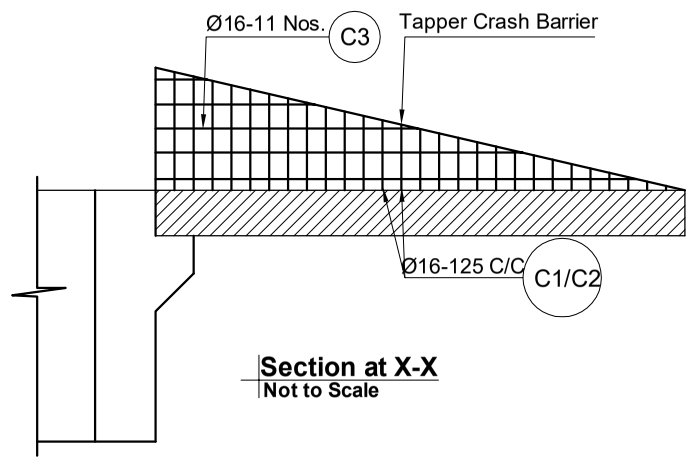

Section at X-X
Not to Scale

Government of Nepal Ministry of Physical Infrastructure and Transport **Department of Roads** **Project Directorate Office (ADB)** **SASEC Highway Improvement Project-** **Project Preparatory Consultant (SHIP-PPC)** **ADB Loan No: 3722-NEP**	**CONSULTANT:** Soosung Engineering Co. Ltd, Korea in association with ERMC P (Ltd) and JJE-Tech Studio of Engineeering Nepal	**ROAD NAME:** **East West Highway (H01)** Butwal - Gorusinghe Section	**SHEET TITLE:** Reinforcement Details of Approach Slab of **Satgadi-1 Bridge** (46/H001/292_A)	**SCALE:** As Shown		**NAME**	**SIGNATURE**	**REV NO.**	**DESCRIPTION**	**DATE:** Sep,2022
					Designed by:	Saroj Bhattarai				**DWG.NO.:** 292_Satgadi-1
					Checked by:	P. Upadhyaya				
					Approved by:	Dr. T.H.Choi				**SHEET NO.:** 19/28

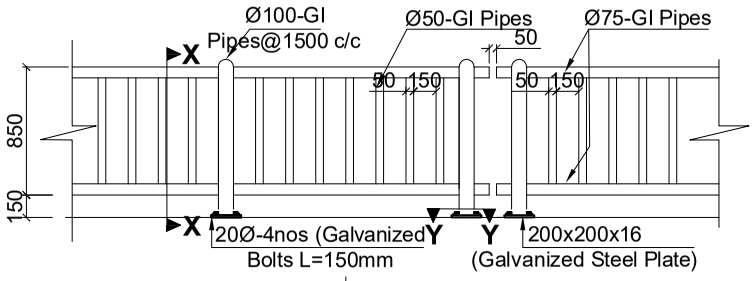

Railing Post Details
Scale:-1:50

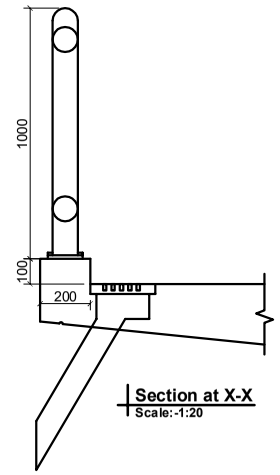

Section at X-X
Scale:-1:20

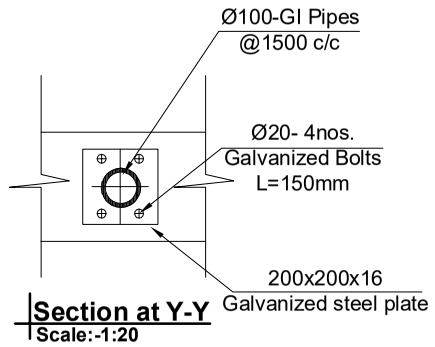

Section at Y-Y
Scale:-1:20

BAR BENDING SCHEDULE OF CENTRAL CRASH BARRIER							
BAR ID	SHAPE OF BAR IN mm (NOT TO SCALE)	SPACING (MM)	Ø OF BARS (mm)	NO. OF BARS	LENGTH (m)	WEIGHT/LENGTH (kG/m)	TOTAL WEIGHT (kG)
C1	575, 250, 555	125	16	8	2.210	1.578	27.905
C2	915, 730	125	16	16	1.580	1.578	39.900
C3	960		16	11	0.960	1.578	16.667
TOTAL FOR 1M							84.473
TOTAL FOR 1.0M IN MT							0.084

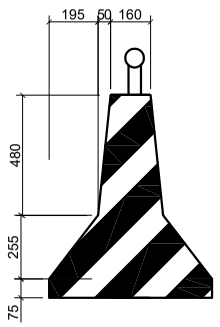

Painting Work on The Bridge Deck
Scale:-1:20

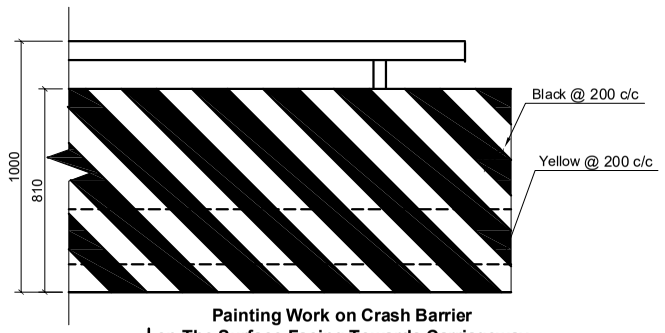

Painting Work on Crash Barrier on The Surface Facing Towards Carriageway
Scale:-1:20

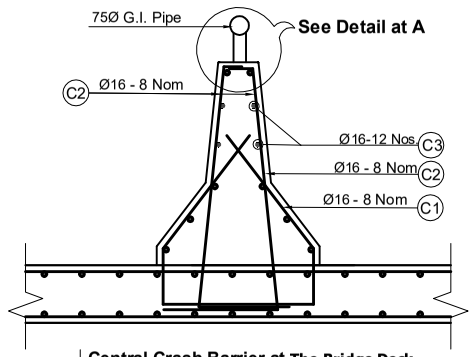

Central Crash Barrier at The Bridge Deck
Scale:-1:20

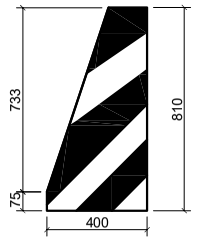

Painting Work on Tapper Crash Barrier
Scale:-1:20

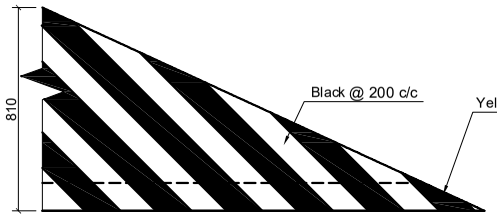

Painting Work on Crash Barrier on The Surface Facing Towards Carriageway
Scale:-1:20

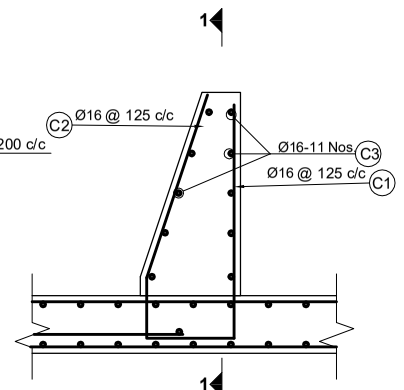

Crash Barrier Detail at The Tapered End
Scale:-1:20

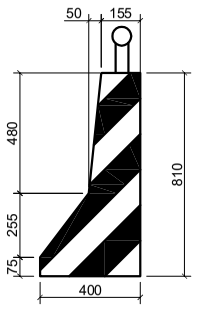

Painting Work on Crash Barrier
Scale:-1:20

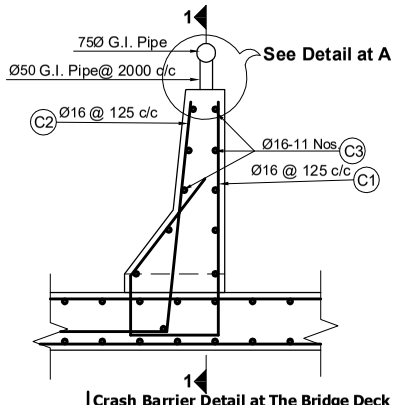

Crash Barrier Detail at The Bridge Deck
Scale:-1:20

NOTES:
The crash barrier shall be sloped at both ends of the bridge as shown and the reinforcement shall be adjusted according to the slope.

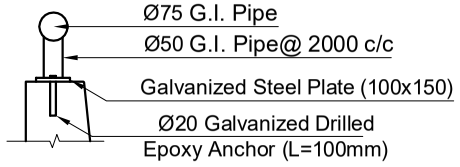

Details at- A-A
Scale:-1:20

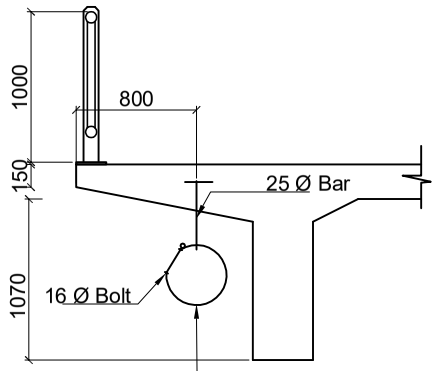

8mm Thick 50 mm Wide Strip
(Diameter of Ring =400mm)
Maximum Load allowed 250 kg/m

Utility hanger Detail
Scale:-1:50

BAR BENDING SCHEDULE OF CRASH BARRIER							
BAR ID	SHAPE OF BAR IN mm (NOT TO SCALE)	SPACING (MM)	Ø OF BARS (mm)	NO. OF BARS	LENGTH (m)	WEIGHT/LENGTH (kG/m)	TOTAL WEIGHT (kG)
C1	575, 928, 225, 304	125	16	81	2.030	1.578	259.526
C2	915, 500	125	16	81	1.415	1.578	180.901
C3	960		16	11	9.960	1.578	172.923
TOTAL FOR 10M							613.351
TOTAL FOR 1.0M IN MT							0.061

Government of Nepal Ministry of Physical Infrastructure and Transport **Department of Roads** **Project Directorate Office (ADB)** **SASEC Highway Improvement Project-** **Project Preparatory Consultant (SHIP-PPC)** **ADB Loan No: 3722-NEP**	**CONSULTANT:** Soosung Engineering Co. Ltd, Korea in association with ERMC P (Ltd) and TTE-Tech Studio of Engineeering Nepal	**ROAD NAME:** **East West Highway (H01)** Butwal - Gorusinghe Section	**SHEET TITLE:** Miscellaneous Details - 1 of **Satgadi-1 Bridge** (46/H001/292_A)	**SCALE:** As Shown		**NAME**	**SIGNATURE**	**REV NO.**	**DESCRIPTION**	**DATE:** Sep,2022 **DWG.NO.:** 292_Satgadi-1 **SHEET NO.:** 20/28
					Designed by:	Saroj Bhattarai				
					Checked by:	P. Upadhyaya				
					Approved by:	Dr. T.H.Choi				

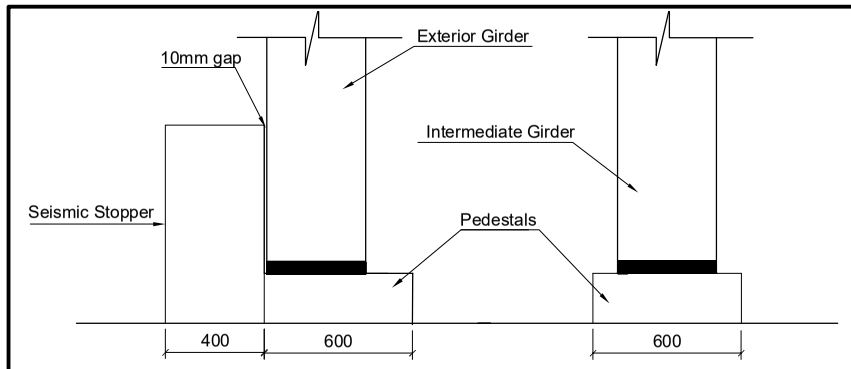

Abutment Cap With Stopper & Pedestal
Scale:-1:25

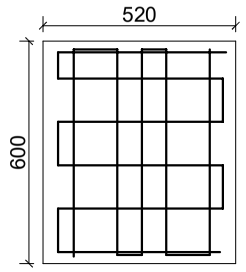

Pedestal Plan
Scale:-1:20

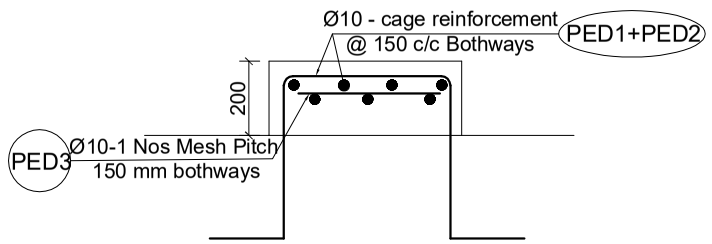

Pedestal Section
Scale:-1:20

NOTE:
To match the height of ballast wall, the pedestal thickness shall be suitably modified.

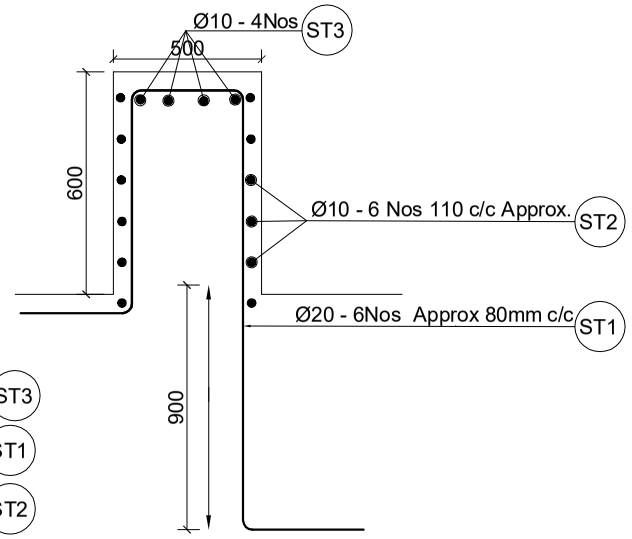

Stoppers Details
Scale:-1:20

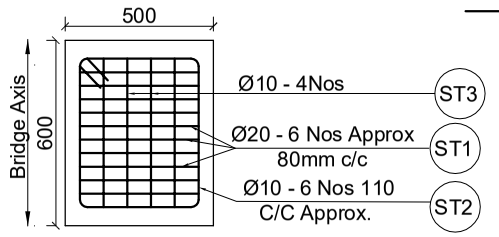

Stoppers Plan
Scale:-1:20

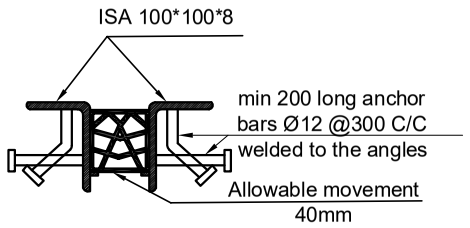

Compression seal type Expansion joints
Scale:-1:5

Notes on Elastomeric Bearings
The dimensions and properties of the bearings shown are tentative, based on IRC:83-2018, Part II, Table B2. The actual design shall be carried out by the manufacturer on the basis of provided load & deformation data. The effective stiffness shall not exceed the shown value.

Lateral stiffness corresponding to overall area and total thickness of elastomer = 2286 N/mm

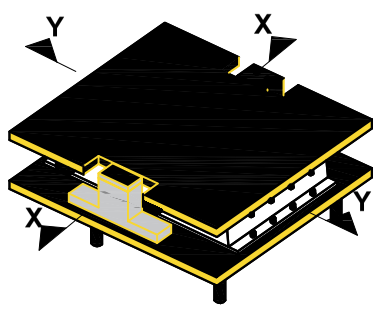

Elastrometric Bearing
(partially free at longitudal direction Fixed at Transverse direction)
Scale:-1:25

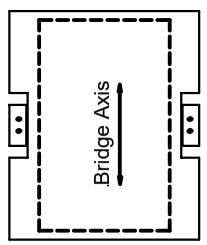

Elastomatric Bearing
Scale:-1:25

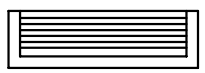

Section X-X
Scale:-1:25

Section Y-Y
Scale:-1:25

BAR BENDING SCHEDULE OF PEDESTAL

BAR ID	SHAPE OF BAR IN mm (NOT TO SCALE)	SPACING (mm)	Ø OF BARS (mm)	NO. OF BARS	LENGTH (m)	WEIGHT/LENGTH (Kg/m)	TOTAL WEIGHT (Kg)
PED1	520; 680; 200	150	12	4	2.280	0.888	8.097
PED2	440; 680; 200	150	12	5	2.200	0.888	9.766
PED3	508; 428; Pitch 150 bothway, 1 layer	150	12	1	4.600	0.888	4.084
TOTAL BAR BENDING SCHEDULE OF PEDESTAL							21.947
TOTAL WEIGHT (IN METRIC TON)							0.022

BAR BENDING SCHEDULE OF STOPPER

BAR ID	SHAPE OF BAR IN mm (NOT TO SCALE)	SPACING (mm)	Ø OF BARS (mm)	NO. OF BARS	LENGTH (m)	WEIGHT/LENGTH (Kg/m)	TOTAL WEIGHT (Kg)
ST1	400; 600; 300; 1500; 300	80	20	6	3.100	2.466	45.871
ST2	420; 100; 400	110	10	6	1.840	0.617	6.807
ST3	400	0	10	4	0.400	0.617	0.986
TOTAL BAR BENDING SCHEDULE OF STOPPER							53.664
TOTAL WEIGHT (IN METRIC TON)							0.054

Design data for bearings(Elastomeric Bearing)	All Loads Unfactored
Maximum permanent and superimposed dead loads	482.4 kN
Maximum load from surfacing (wearing course)	30.7 kN
RCC URBAN variable lanes	22m / Info / 62
Maximum live load reaction (including impact)	550.3 kN
Maximum horizontal seismic force	87 kN
Maximum braking force	88.6 kN
Total Maximum elongation of the deck	8 mm
Maximum Rotation due to dead load _	0.0023 rad
Maximum rotation due to dead load + live load _	0.0038 rad
Concrete for superstructure	M 30
Concrete for substructure	M25/M30
Width of girder at bearings	400 mm
Length of bearing along bridge axis (Assumed length)	320 mm

Government of Nepal Ministry of Physical Infrastructure and Transport **Department of Roads** **Project Directorate Office (ADB)** **SASEC Highway Improvement Project-** **Project Preparatory Consultant (SHIP-PPC)** **ADB Loan No: 3722-NEP**	**CONSULTANT:** Soosung Engineering Co. Ltd, Korea in association with ERMC P (Ltd) and GTE-Tech Studio of Engineeering Nepal	**ROAD NAME:** **East West Highway (H01)** Butwal - Gorusinghe Section	**SHEET TITLE:** Miscellaneous Details - 2 of **Satgadi-1 Bridge** (46/H001/292_A)	**SCALE:** As Shown		**NAME**	**SIGNATURE**	**REV NO.**	**DESCRIPTION**	**DATE:** Sep,2022
					Designed by:	Saroj Bhattarai				**DWG.NO.:** 292_Satgadi-1
					Checked by:	P. Upadhyaya				**SHEET NO.:** 21/28
					Approved by:	Dr. T.H.Choi				

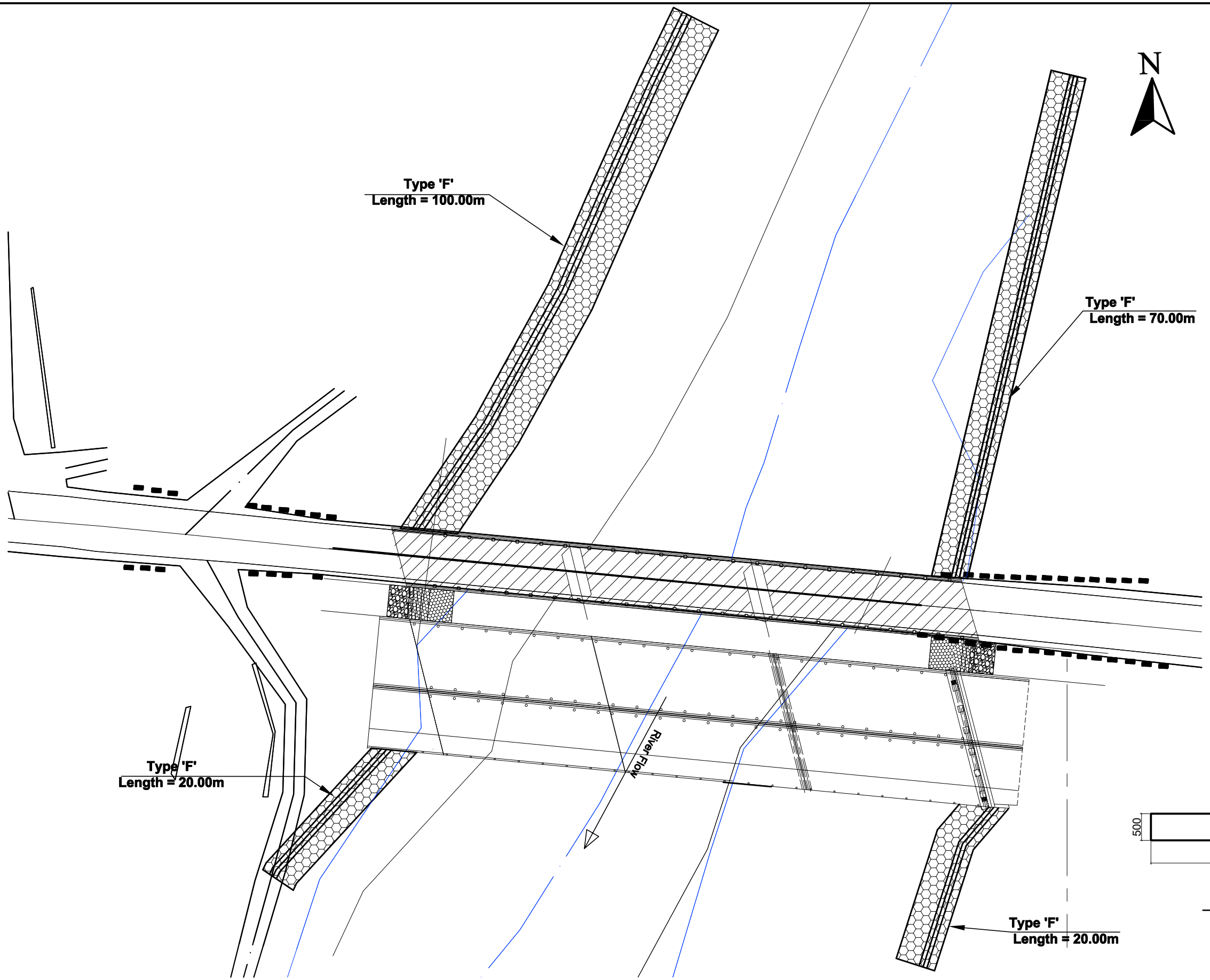

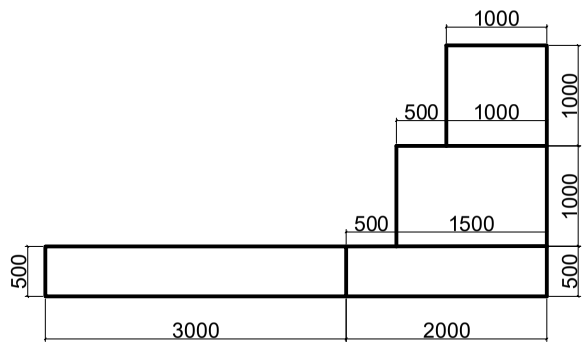

"F" Type River Training Structure
Scale:-1:75

Government of Nepal Ministry of Physical Infrastructure and Transport **Department of Roads** **Project Directorate Office (ADB)** **SASEC Highway Improvement Project-** **Project Preparatory Consultant (SHIP-PPC)** **ADB Loan No: 3722-NEP**	**CONSULTANT:**	**ROAD NAME:**	**SHEET TITLE:**	**SCALE:**		**NAME**	**SIGNATURE**	**REV NO.**	**DESCRIPTION**	**DATE:**
	Soosung Engineering Co. Ltd, Korea in association with ERMC P (Ltd) and TK-Tech Studio of Engineeering Nepal	**East West Highway (H01)**	River Training Work of **Satgadi-1 Bridge** (46/H001/292_A)	As Shown	Designed by:	Saroj Bhattarai				November , 2022
		Butwal - Gorusinghe Section			Checked by:	P. Upadhyaya				**DWG.NO.:** 292_Satgadi-1
					Approved by:	Dr. T.H.Choi				**SHEET NO.:** 22/28

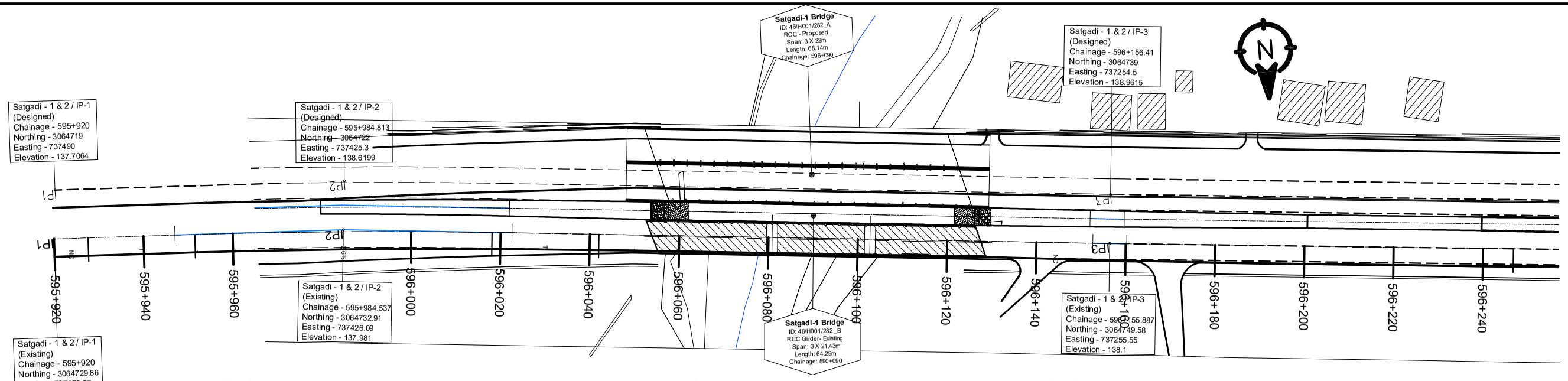

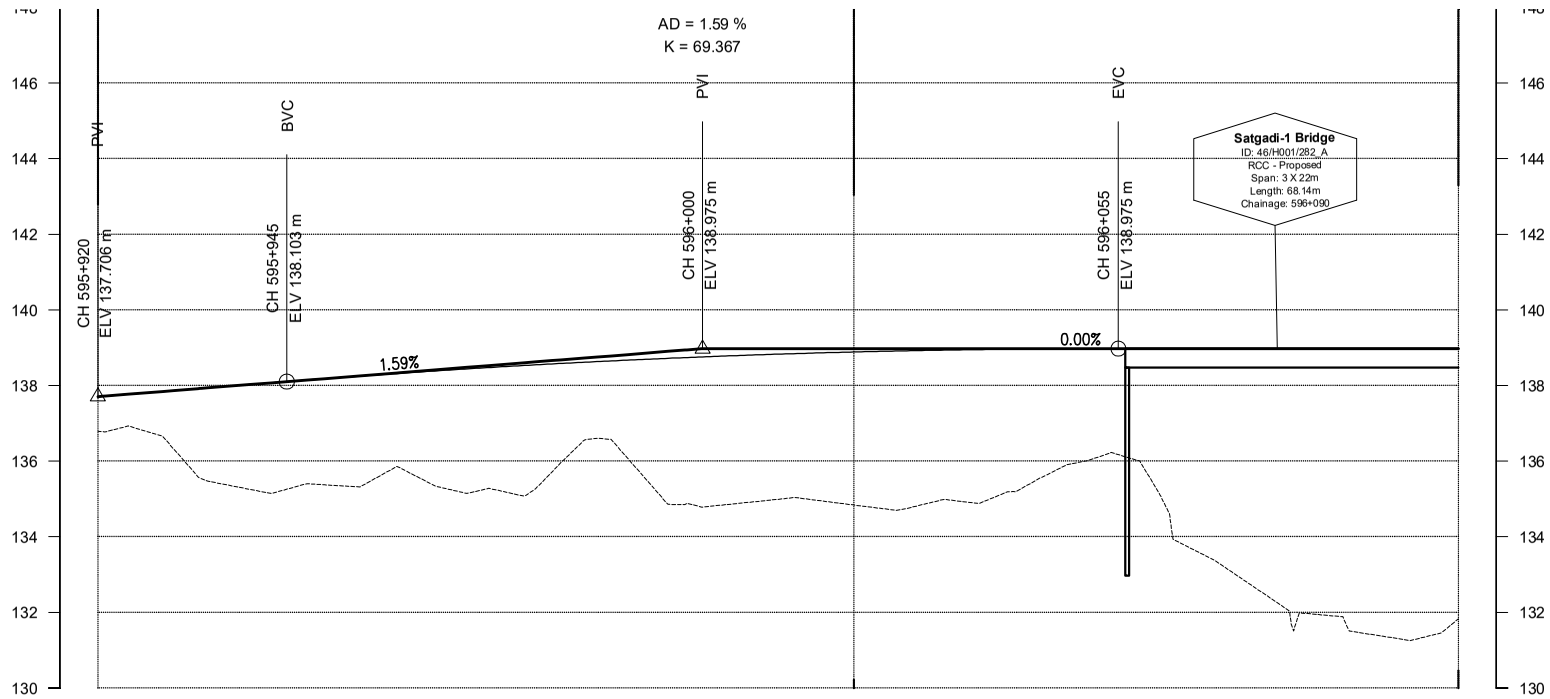

DESIGN LEVEL(m)	137.706	137.865	138.024	138.180	138.324	138.454	138.570	138.670	138.757	138.829	138.887	138.930	138.959	138.973	138.975	138.975	138.975	138.975	138.975
EXISTING LEVEL(m)	136.788	136.330	135.257	135.374	135.818	135.199	135.699	136.094	134.785	134.990	134.839	134.895	135.160	135.976	135.279	133.069	131.968	131.368	131.830

HORIZONTAL ALIGNMENT — RIGHT / LEFT

IP-1 R=0.00 | IP-2 R=1505.50

SUPER ELEVATION

NC | T | -2.555555555555556 | T | NC

595+920 | 595+927.612 | 595+951.529 | 596+018.098 | 596+042.015 | 596+100

CHAINAGE(Km)

595+920 | 595+930 | 595+940 | 595+950 | 595+960 | 595+970 | 595+980 | 595+990 | 596+000 | 596+010 | 596+020 | 596+030 | 596+040 | 596+050 | 596+060 | 596+070 | 596+080 | 596+090 | 596+100

Government of Nepal
Ministry of Physical Infrastructure and Transport
Department of Roads
Project Directorate office (ADB)
SASEC Highway Improvement Project-
Project Preparatory Consultant (SHIP-PPC)
ADB Loan No: 3722-NEP

CONSULTANT:
Soosung Engineering Co. Ltd, Korea in association with
ERMC P (Ltd), Nepal
and
TSE-Tech Studio of Engineeering

IMPLEMENTING AGENCY:
DOR, DCID

ROAD NAME:
East West Highway (H01)
Butwal - Gorusinghe Section

SHEET TITLE:
Plan & Profile of Satgadi_1 Bridge
595+920-596+100

SCALE:
0 2 4 6m — Vertical Scale
0 10 20 30m — Horizontal Scale

	NAME	SIGNATURE	REV NO.	DESCRIPTION
DESIGNED BY:	Saroj Bhattarai			
CHECKED BY:	P. Upadhyaya			
APPROVED BY:	Dr. T.H.Choi			

DATE: November , 2022
DWG.NO.: 292_Satgadi
SHEET NO.: 23/28

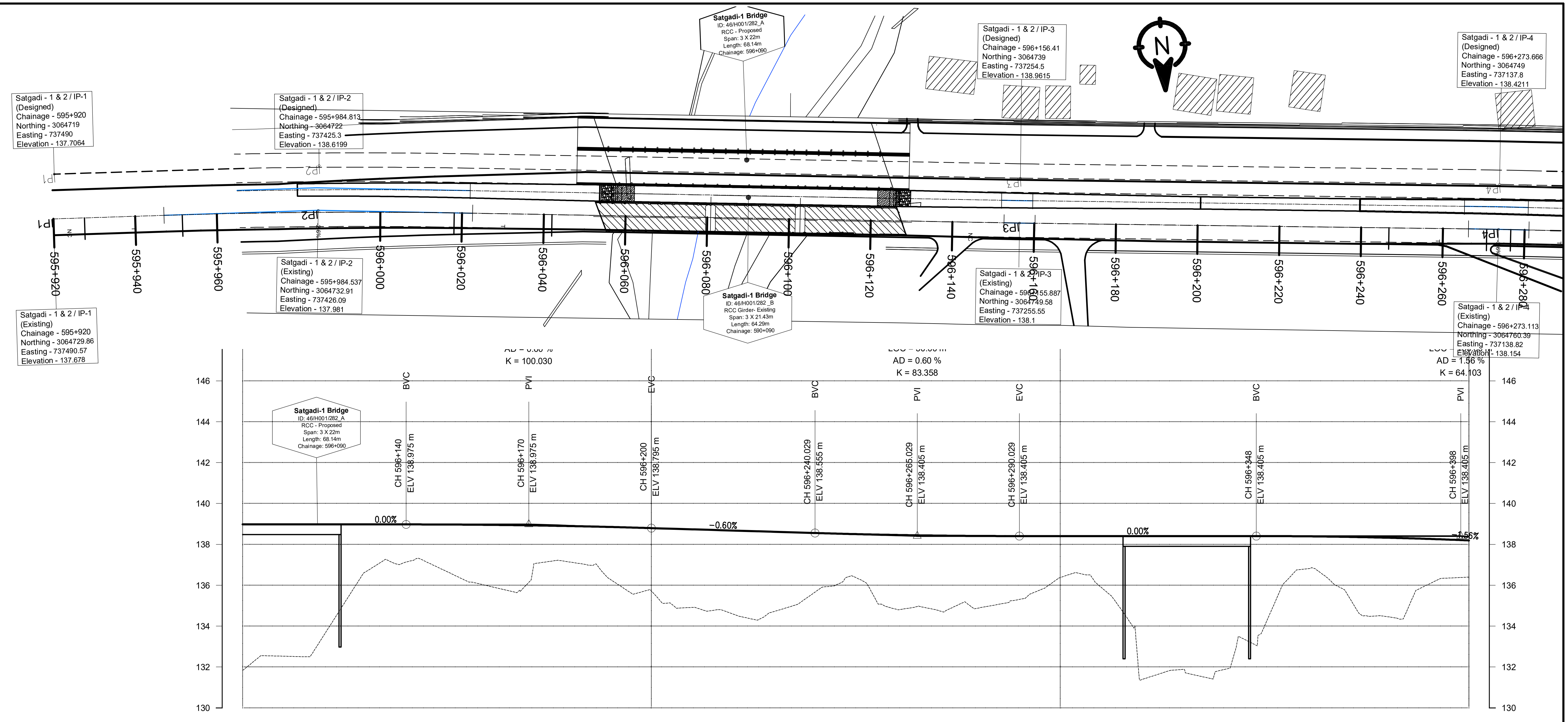

CHAINAGE(Km)	DESIGN LEVEL(m)	EXISTING LEVEL(m)
596+100	138.975	131.830
596+110	138.975	132.528
596+120	138.975	133.594
596+130	138.975	136.645
596+140	138.975	137.136
596+150	138.970	136.664
596+160	138.955	135.971
596+170	138.930	136.139
596+180	138.895	137.136
596+190	138.850	136.279
596+200	138.795	135.723
596+210	138.735	134.915
596+220	138.675	134.587
596+230	138.615	134.712
596+240	138.555	135.659
596+250	138.501	136.376
596+260	138.459	134.816
596+270	138.429	134.777
596+280	138.411	134.886
596+290	138.405	135.306
596+300	138.405	136.376
596+310	138.405	135.904
596+320	138.405	131.387
596+330	138.405	131.881
596+340	138.405	131.871
596+350	138.405	134.003
596+360	138.394	136.797
596+370	138.367	135.644
596+380	138.325	134.463
596+390	138.267	136.035
596+400	138.194	136.389

HORIZONTAL ALIGNMENT (RIGHT / LEFT): IP-3 R=1494.50; IP-4 R=1505.50; IP-5 R=1500.00

SUPER ELEVATION: 596+100; NC; 596+246.813; T; 596+270.729; -2.5555555555556; 596+276.603; T; 596+300.52; NC; 596+347.88; T; 596+354.18; 2; 596+400

Government of Nepal
Ministry of Physical Infrastructure and Transport
Department of Roads
Project Directorate office (ADB)
SASEC Highway Improvement Project-
Project Preparatory Consultant (SHIP-PPC)
ADB Loan No: 3722-NEP

CONSULTANT:
Soosung Engineering Co. Ltd, Korea in association with
ERMC P (Ltd), Nepal
and
TSE-Tech Studio of Engineeering

IMPLEMENTING AGENCY: **DOR, DCID**

ROAD NAME: **East West Highway (H01)**

Butwal - Gorusinghe Section

SHEET TITLE: Plan & Profile of Satgadi_1 Bridge 596+100-596+400

SCALE: 0 2 4 6m Vertical Scale; 0 10 20 30m Horizontal Scale

	NAME	SIGNATURE	REV NO.	DESCRIPTION
DESIGNED BY:	Saroj Bhattarai			
CHECKED BY:	P. Upadhyaya			
APPROVED BY:	Dr. T.H.Choi			

DATE: November , 2022
DWG.NO.: 292_Satgadi
SHEET NO.: 24/28

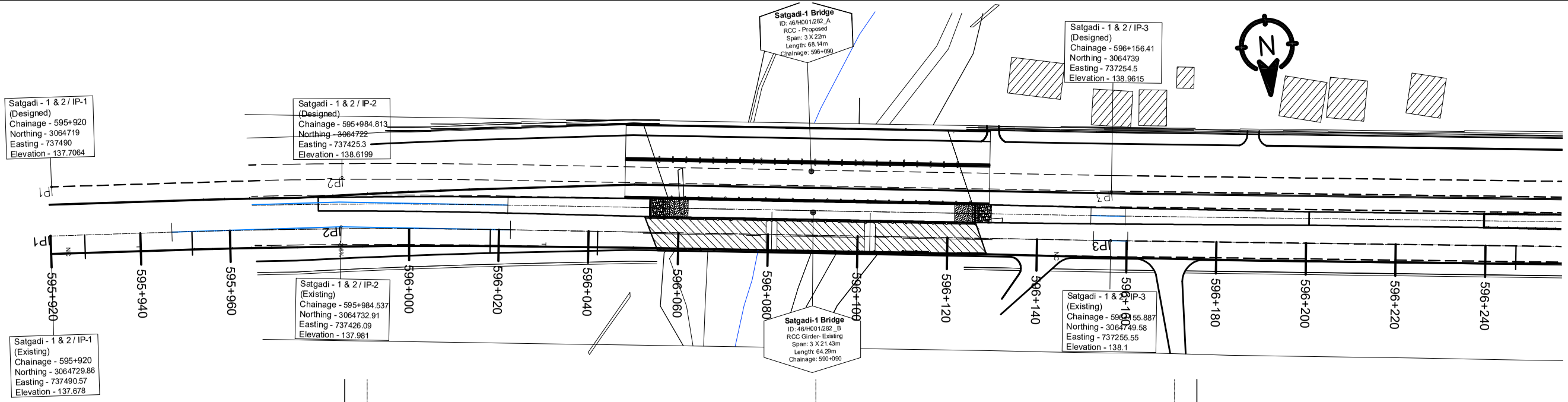

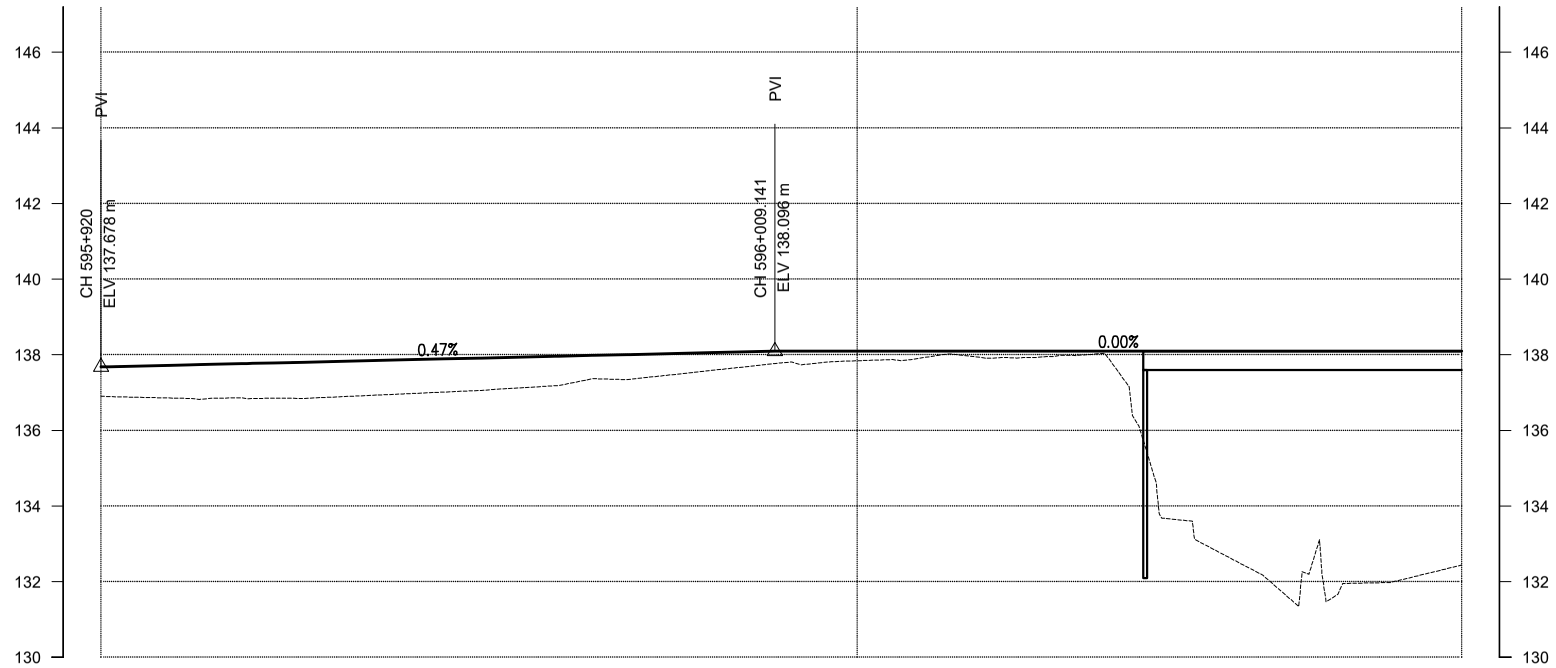

DESIGN LEVEL(m)	137.678	137.725	137.772	137.819	137.866	137.912	137.959	138.006	138.053	138.096	138.096	138.096	138.096	138.096	138.096	138.096	138.096	138.096	138.096	138.096
EXISTING LEVEL(m)	136.902	136.853	136.840	136.875	136.966	137.054	137.181	137.352	137.569	137.786	137.842	137.961	137.925	137.997	133.793	132.558	132.342	131.975	132.440	
HORIZONTAL ALIGNMENT RIGHT	IP-1 R=0.00			IP-2 R=1494.50																
HORIZONTAL ALIGNMENT LEFT																				
SUPER ELEVATION	NC			T	-2.55555555555556						T	NC								
	595+920			595+948.612 595+951.529							596+017.546 596+020.463								596+100	
CHAINAGE(Km)	595+920	595+930	595+940	595+950	595+960	595+970	595+980	595+990	596+000	596+010	596+020	596+030	596+040	596+050	596+060	596+070	596+080	596+090	596+100	

Government of Nepal
Ministry of Physical Infrastructure and Transport
Department of Roads
Project Directorate office (ADB)
SASEC Highway Improvement Project-
Project Preparatory Consultant (SHIP-PPC)
ADB Loan No: 3722-NEP

CONSULTANT:
Soosung Engineering Co. Ltd, Korea in association with
ERMC P (Ltd), Nepal
and
TSE-Tech Studio of Engineeering

IMPLEMENTING AGENCY:
DOR, DCID

ROAD NAME:
East West Highway (H01)
Butwal - Gorusinghe Section

SHEET TITLE:
Plan & Profile
of
Existing Satgadi_1 Bridge
595+920 - 596+100

SCALE:
0 2 4 6m
Vertical Scale
0 10 20 30m
Horizontal Scale

	NAME	SIGNATURE	REV NO.	DESCRIPTION
DESIGNED BY:	Saroj Bhattarai			
CHECKED BY:	P. Upadhyaya			
APPROVED BY:	Dr. T.H.Choi			

DATE: November , 2022
DWG.NO.: 292_Satgadi
SHEET NO.: 25/28

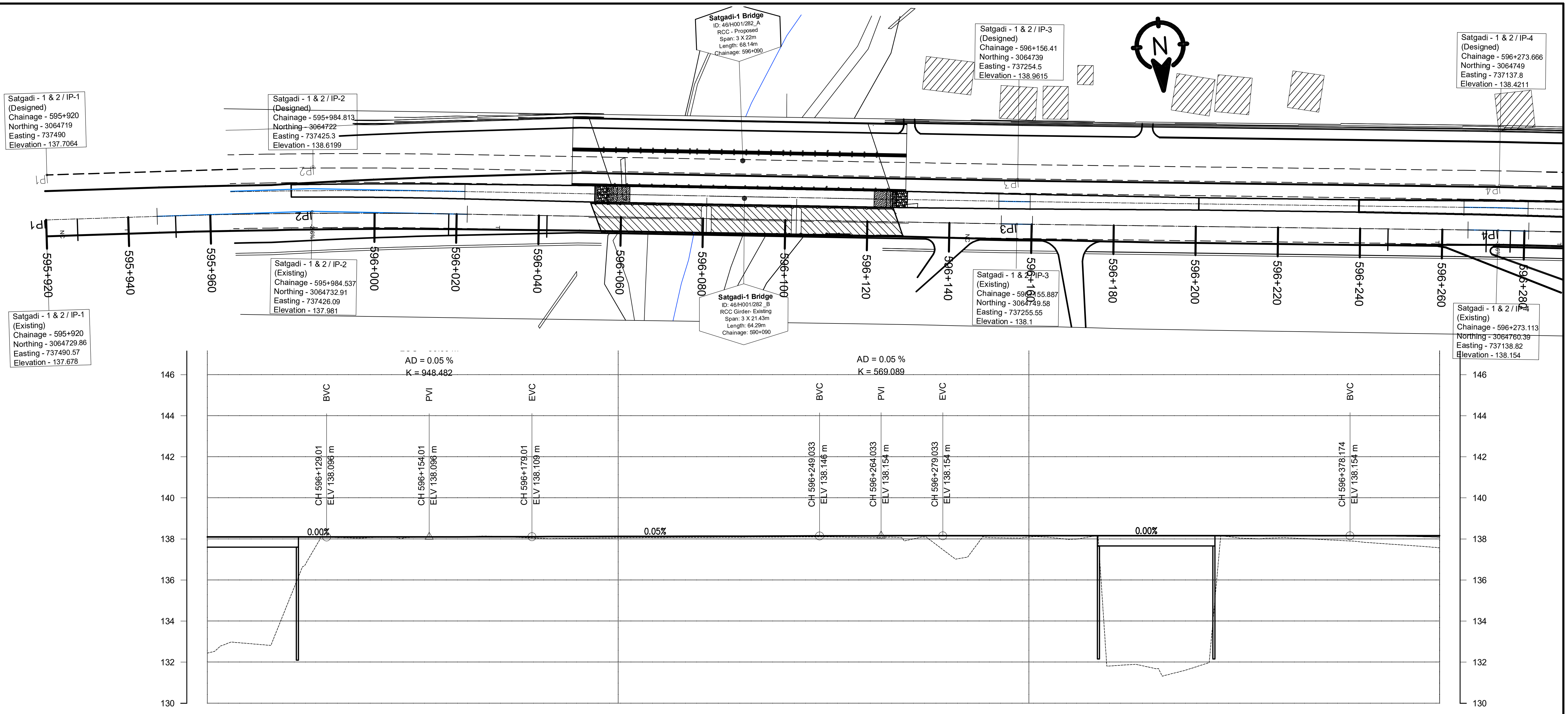

CHAINAGE(Km)	DESIGN LEVEL(m)	EXISTING LEVEL(m)
596+100	138.096	132.440
596+110	138.096	132.907
596+120	138.096	135.081
596+130	138.096	138.083
596+140	138.097	138.066
596+150	138.098	138.074
596+160	138.101	138.104
596+170	138.105	138.120
596+180	138.110	138.040
596+190	138.115	138.031
596+200	138.120	138.055
596+210	138.126	138.068
596+220	138.131	138.075
596+230	138.136	138.085
596+240	138.141	138.094
596+250	138.147	138.101
596+260	138.151	138.071
596+270	138.153	137.917
596+280	138.154	137.338
596+290	138.154	138.076
596+300	138.154	138.086
596+310	138.154	137.980
596+320	138.154	131.819
596+330	138.154	131.720
596+340	138.154	131.727
596+350	138.154	138.076
596+360	138.154	138.049
596+370	138.154	137.985
596+380	138.154	137.872
596+390	138.135	137.720
596+400	138.090	137.569

HORIZONTAL ALIGNMENT (RIGHT / LEFT): IP-3 R=1505.50; IP-4 R=1494.50; IP-5 R=1500.00

SUPER ELEVATION: 596+100; NC; 596+267.146; 596+270.063; -2.5555555555556; 596+276.164; 596+279.08; NC; 596+351.928; T; 596+354.845; 2.5555555555556; 596+400

Government of Nepal Ministry of Physical Infrastructure and Transport **Department of Roads** **Project Directorate office (ADB)** **SASEC Highway Improvement Project-** **Project Preparatory Consultant (SHIP-PPC)** **ADB Loan No: 3722-NEP**	**CONSULTANT:** Soosung Engineering Co. Ltd, Korea in association with ERMC P (Ltd), Nepal and TSE-Tech Studio of Engineeering	**IMPLEMENTING AGENCY:** **DOR, DCID** **ROAD NAME:** **East West Highway (H01)** **Butwal - Gorusinghe Section**

SHEET TITLE:	**SCALE:**
Plan & Profile of Existing Satgadi_1 Bridge 596+100 - 596+400	0 2 4 6m Vertical Scale 0 10 20 30m Horizontal Scale

	NAME	SIGNATURE	REV NO.	DESCRIPTION
DESIGNED BY:	Saroj Bhattarai			
CHECKED BY:	P. Upadhyaya			
APPROVED BY:	Dr. T.H.Choi			

DATE: November , 2022
DWG.NO.: 292_Satgadi
SHEET NO.: 26/28

Ch:595+850
GL:137.411
DL:138.213

GL: 137.360
DL: 137.910

GL: 137.182
DL: 138.213

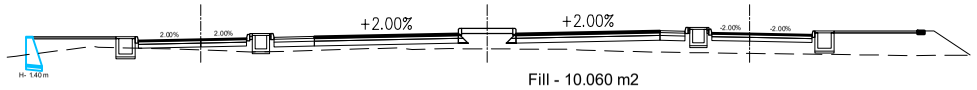

Fill - 10.060 m2

Ch:595+860
GL:137.411
DL:138.133

GL: 137.476
DL: 137.848

GL: 137.101
DL: 138.141

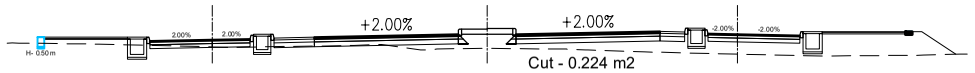

Cut - 0.224 m2
Fill - 7.626 m2

Ch:595+870
GL:137.331
DL:138.042

GL: 137.608
DL: 137.785

GL: 137.658
DL: 138.068

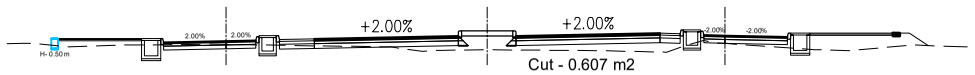

Cut - 0.607 m2
Fill - 6.348 m2

Ch:595+880
GL:137.210
DL:137.947

GL: 137.643
DL: 137.722

GL: 137.200
DL: 137.996

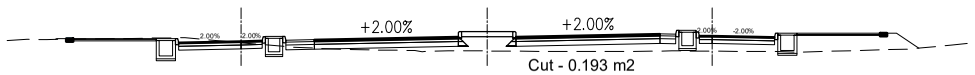

Cut - 0.193 m2
Fill - 6.571 m2

Ch:595+890
GL:137.121
DL:137.859

GL: 137.685
DL: 137.660

GL: 137.148
DL: 137.924

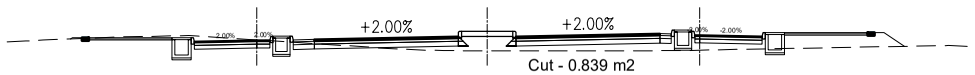

Cut - 0.839 m2
Fill - 6.000 m2

Ch:595+900
GL:137.052
DL:137.789

GL: 137.324
DL: 137.597

GL: 136.811
DL: 137.852

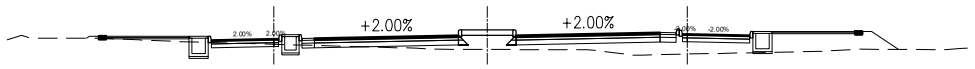

Cut - 0.252 m2
Fill - 7.158 m2

Ch:595+910
GL:136.977
DL:137.740

GL: 137.156
DL: 137.534

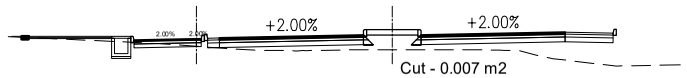

Cut - 0.007 m2
Fill - 10.687 m2

Ch:595+920
GL:136.893
DL:137.710

GL: 136.788
DL: 137.706

GL: 136.902
DL: 137.678

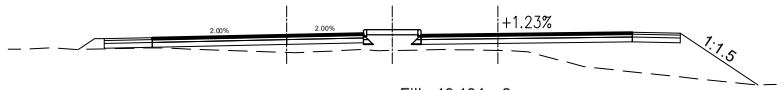

Fill - 19.134 m2

Ch:595+930
GL:136.844
DL:137.700

GL: 136.330
DL: 137.865

GL: 136.853
DL: 137.725

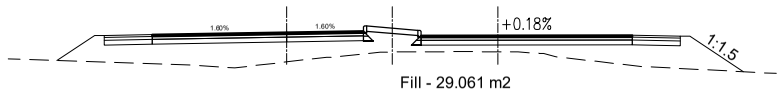

Fill - 29.061 m2

Ch:595+940
GL:136.774
DL:137.710

GL: 135.257
DL: 138.024

GL: 136.840
DL: 137.772

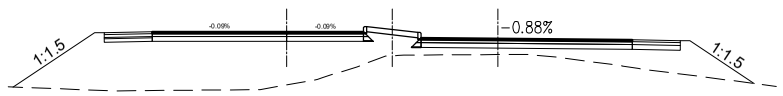

Fill - 40.070 m2

Ch:595+950
GL:136.803
DL:137.740

GL: 135.374
DL: 138.180

GL: 136.875
DL: 137.819

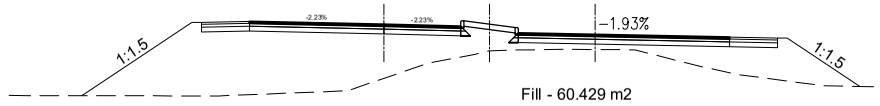

Fill - 60.429 m2

Ch:595+960
GL:136.793
DL:137.789

GL: 135.813
DL: 138.324

GL: 136.965
DL: 137.866

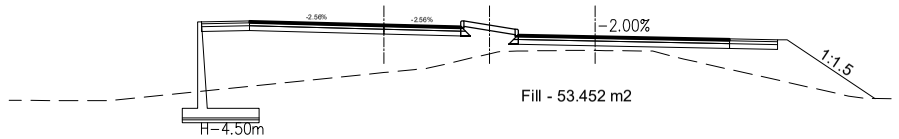

Fill - 53.452 m2

Ch:595+970
GL:136.745
DL:137.850

GL: 135.203
DL: 138.454

GL: 137.054
DL: 137.912

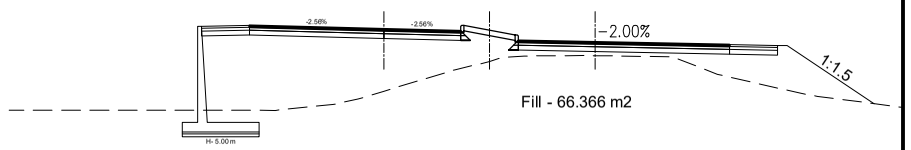

Fill - 66.366 m2

Ch:595+980
GL:136.766
DL:137.905

GL: 135.724
DL: 138.570

GL: 137.179
DL: 137.959

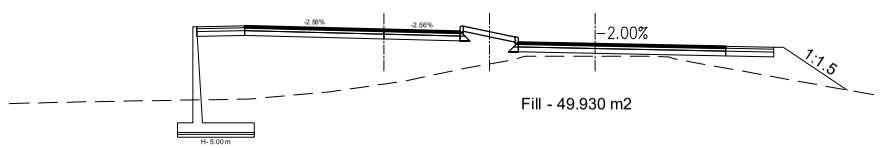

Fill - 49.930 m2

Ch:595+990
GL:137.151
DL:137.953

GL: 136.058
DL: 138.670

GL: 137.349
DL: 138.006

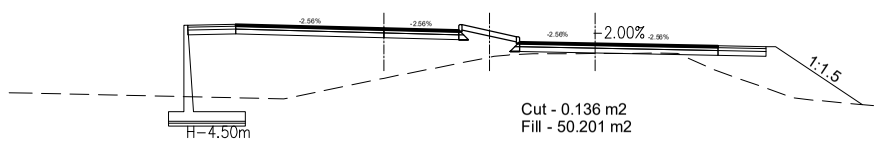

Cut - 0.136 m2
Fill - 50.201 m2

Government of Nepal Ministry of Physical Infrastructure and Transport **Department of Roads** **Project Directorate office (ADB)** **SASEC Highway Improvement Project-** **Project Preparatory Consultant (SHIP-PPC)** **ADB Loan No: 3722-NEP**	**CONSULTANT:** Soosung Engineering Co. Ltd, Korea in association with ERMC P (Ltd), Nepal and TSE-Tech Studio of Engineeering	**IMPLEMENTING AGENCY:** **DOR, DCID** **ROAD NAME:** **East West Highway (H01)** **Butwal - Gorusinghe Section**	**SHEET TITLE:** Cross Section of Ch:595+850 - 595+990	**SCALE:** 0 2 4 6m Vertical Scale 0 10 20 30m Horizontal Scale		**NAME**	**SIGNATURE**	**REV NO.**	**DESCRIPTION**	**DATE:** November , 2022
					DESIGNED BY:	Saroj Bhattarai				**DWG.NO.:** 292_Satgadi
					CHECKED BY:	P. Upadhyaya				
					APPROVED BY:	Dr. T.H.Choi				**SHEET NO.:** 26.1/28

Ch:596+000

GL:136.856

GL: 134.789 DL:137.994

DL: 138.757

GL: 137.565

DL: 138.053

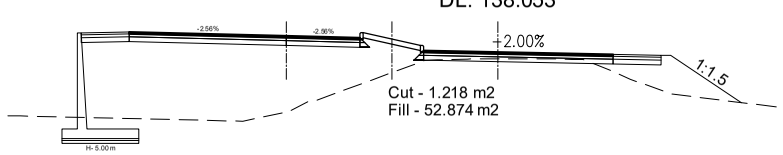

Ch:596+010

GL:137.072

GL: 134.995 DL:138.028

DL: 138.829

GL: 137.782

DL: 138.096

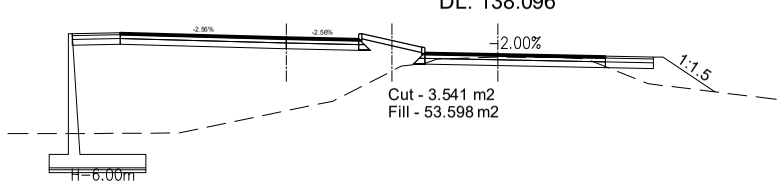

Ch:596+020

GL:137.123

GL: 134.832 DL:138.055

DL: 138.887

GL: 137.840

DL: 138.096

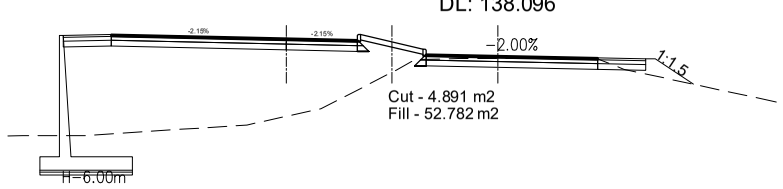

Ch:596+030

GL:137.139

GL: 134.908 DL:138.076

DL: 138.930

GL: 137.953

DL: 138.096

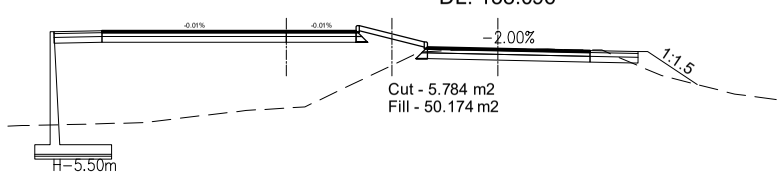

Ch:596+040

GL:137.302

GL: 135.183 DL:138.089

DL: 138.959

GL: 137.925

DL: 138.096

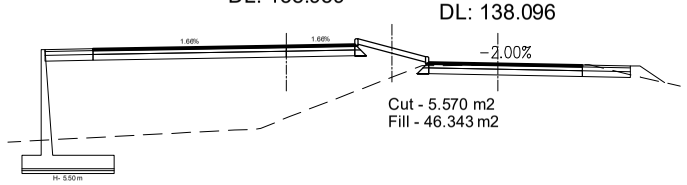

Ch:596+050

GL:137.765

GL: 135.986 DL:138.095

DL: 138.973

GL: 137.993

DL: 138.096

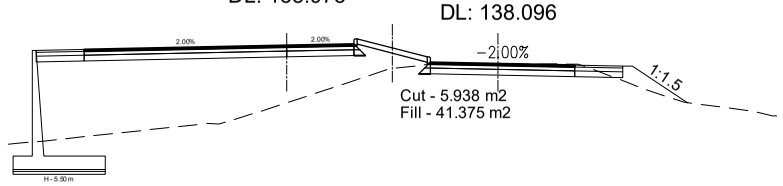

Ch:596+060

GL:135.569

GL: 135.186 DL:138.096

DL: 138.975

GL: 134.296

DL: 138.096

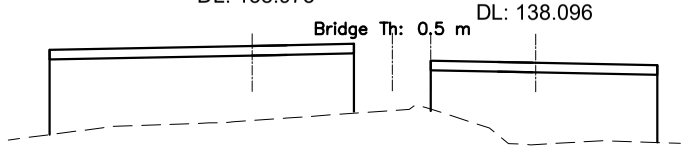

Ch:596+070

GL:132.710

GL: 133.032 DL:138.096

DL: 138.975

GL: 132.587

DL: 138.096

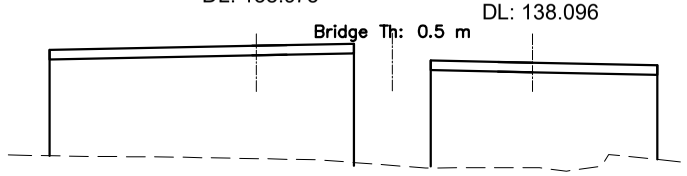

Ch:596+080

GL:131.928

GL: 131.963 DL:138.096

DL: 138.975

GL: 132.205

DL: 138.096

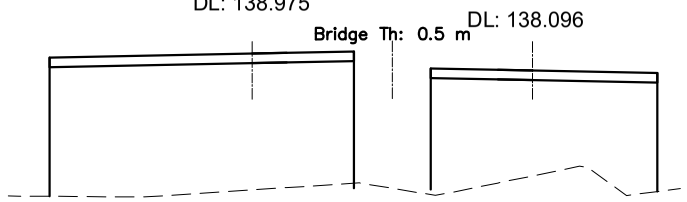

Ch:596+090

GL:131.665

GL: 131.359 DL:138.096

DL: 138.975

GL: 131.974

DL: 138.096

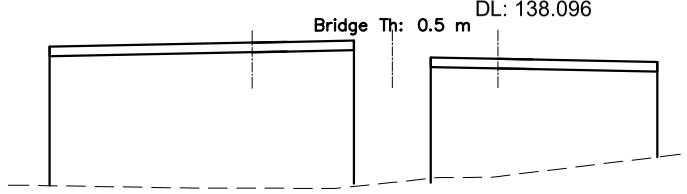

Ch:596+100

GL:132.152

GL: 131.875 DL:138.096

DL: 138.975

GL: 132.427

DL: 138.096

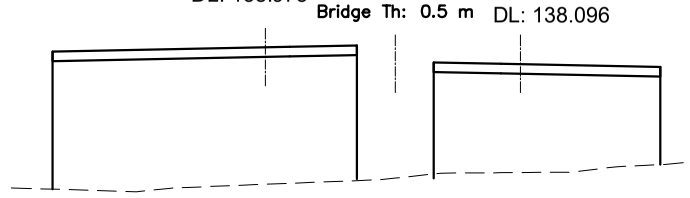

Ch:596+110

GL:132.756

GL: 132.527 DL:138.096

DL: 138.975

GL: 132.912

DL: 138.096

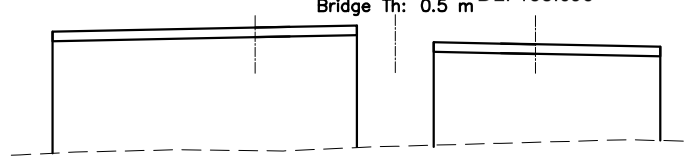

Ch:596+120

GL:134.571

GL: 133.681 DL:138.096

DL: 138.975

GL: 134.943

DL: 138.096

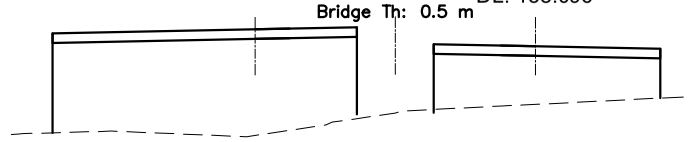

Ch:596+130

GL:137.496

GL: 136.679 DL:138.095

DL: 138.975

GL: 138.087

DL: 138.096

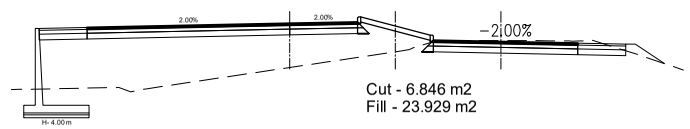

Ch:596+140

GL:137.839

GL: 137.151 DL:138.080

DL: 138.975

GL: 138.064

DL: 138.097

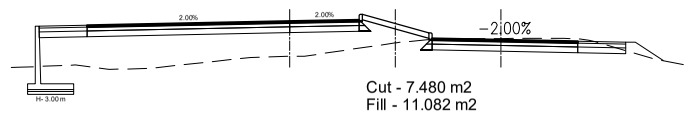

Government of Nepal Ministry of Physical Infrastructure and Transport **Department of Roads** **Project Directorate office (ADB)** **SASEC Highway Improvement Project-** **Project Preparatory Consultant (SHIP-PPC)** **ADB Loan No: 3722-NEP**	**CONSULTANT:** Soosung Engineering Co. Ltd, Korea in association with ERMC P (Ltd), Nepal and TSE-Tech Studio of Engineeering	**IMPLEMENTING AGENCY:** **DOR, DCID** **ROAD NAME:** **East West Highway (H01)** **Butwal - Gorusinghe Section**	**SHEET TITLE:** Cross Section of Ch:596+000 - 596+140	**SCALE:** 0 2 4 6m Vertical Scale 0 10 20 30m Horizontal Scale		**NAME**	**SIGNATURE**	**REV NO.**	**DESCRIPTION**	**DATE:** November , 2022
					DESIGNED BY:	Saroj Bhattarai				**DWG.NO.:** 292_Satgadi
					CHECKED BY:	P. Upadhyaya				
					APPROVED BY:	Dr. T.H.Choi				**SHEET NO.:** 26.2/28

Ch:596+150
GL:137.641
GL: 136.638 DL:138.047
DL: 138.970
GL: 138.072
DL: 138.098

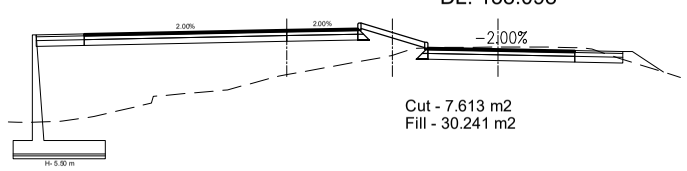

Ch:596+160
GL:137.680
GL: 135.959 DL:137.997
DL: 138.955
GL: 138.105
DL: 138.101

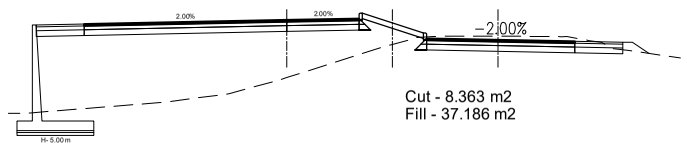

Ch:596+170
GL:137.852
GL: 136.191 DL:137.929
DL: 138.930
GL: 138.122
DL: 138.105

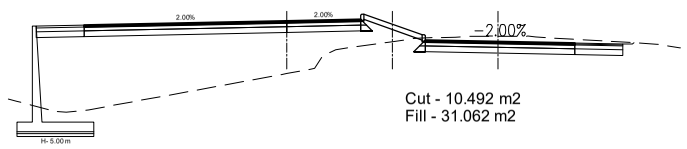

Ch:596+180
GL:137.697
GL: 137.129 DL:137.844
DL: 138.895
GL: 138.042
DL: 138.110

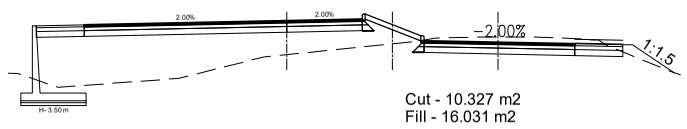

Ch:596+190
GL:137.802
GL: 136.247 DL:137.762
DL: 138.850
GL: 138.031
DL: 138.115

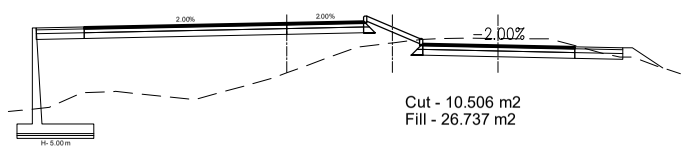

Ch:596+200
GL:137.386
GL: 135.668 DL:137.705
DL: 138.795
GL: 138.054
DL: 138.120

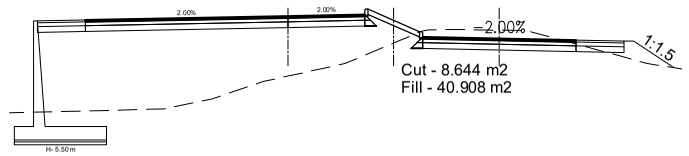

Ch:596+210
GL:137.405
GL: 134.918 DL:137.671
DL: 138.735
GL: 138.067
DL: 138.126

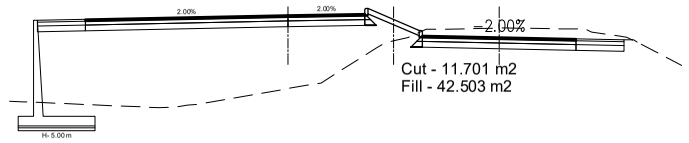

Ch:596+220
GL:137.211
GL: 134.569 DL:137.660
DL: 138.675
GL: 138.074
DL: 138.131

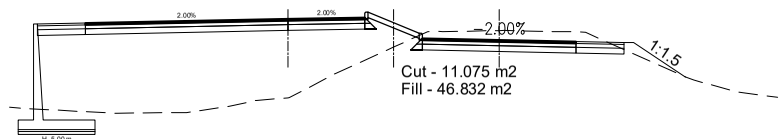

Ch:596+230
GL:137.302
GL: 134.727 DL:137.674
DL: 138.615
GL: 138.085
DL: 138.136

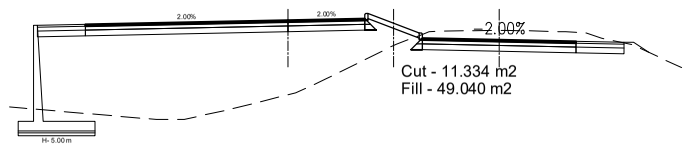

Ch:596+240
GL:137.245
GL: 135.695 DL:137.711
DL: 138.555
GL: 138.093
DL: 138.141

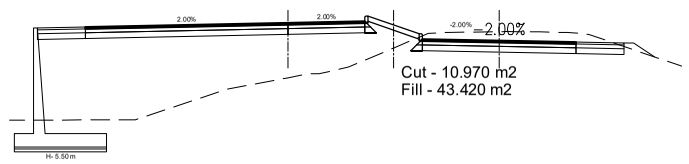

Ch:596+250
GL:137.291
GL: 136.353 DL:137.772
DL: 138.501
GL: 138.101
DL: 138.147

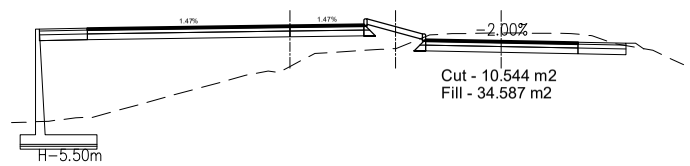

Ch:596+260
GL:137.287
GL: 134.803 DL:137.856
DL: 138.459
GL: 138.072
DL: 138.151

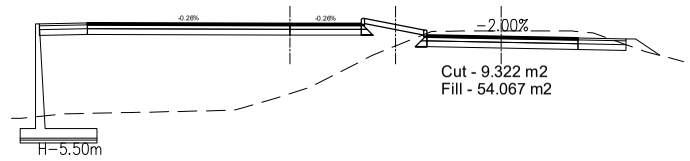

Ch:596+270
GL:137.235
GL: 134.761 DL:137.951
DL: 138.429
GL: 137.905
DL: 138.153

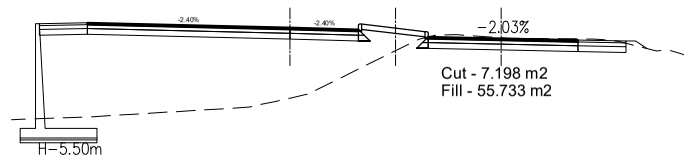

Ch:596+280
GL:136.014
GL: 134.897 DL:138.029
DL: 138.411
GL: 137.383
DL: 138.154

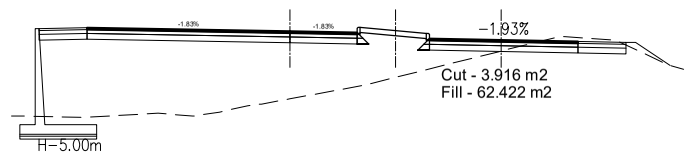

Ch:596+290
GL:137.141
GL: 135.317 DL:138.089
DL: 138.405
GL: 138.079
DL: 138.154

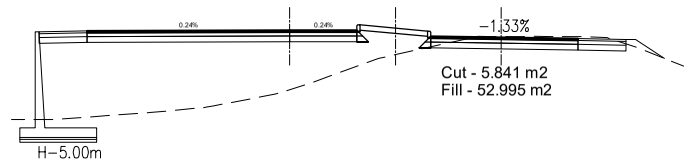

Government of Nepal Ministry of Physical Infrastructure and Transport **Department of Roads** **Project Directorate office (ADB)** **SASEC Highway Improvement Project-** **Project Preparatory Consultant (SHIP-PPC)** **ADB Loan No: 3722-NEP**	**CONSULTANT:** Soosung Engineering Co. Ltd, Korea in association with ERMC P (Ltd), Nepal and TSE-Tech Studio of Engineeering	**IMPLEMENTING AGENCY:** **DOR, DCID** **ROAD NAME:** **East West Highway (H01)** **Butwal - Gorusinghe Section**	**SHEET TITLE:** Cross Section of Ch:596+150 - 596+290	**SCALE:** 0 2 4 6m Vertical Scale 0 10 20 30m Horizontal Scale		**NAME**	**SIGNATURE**	**REV NO.**	**DESCRIPTION**	**DATE:** November , 2022 **DWG.NO.:** 292_Satgadi **SHEET NO.:** 26.3/28
					DESIGNED BY:	Saroj Bhattarai				
					CHECKED BY:	P. Upadhyaya				
					APPROVED BY:	Dr. T.H.Choi				

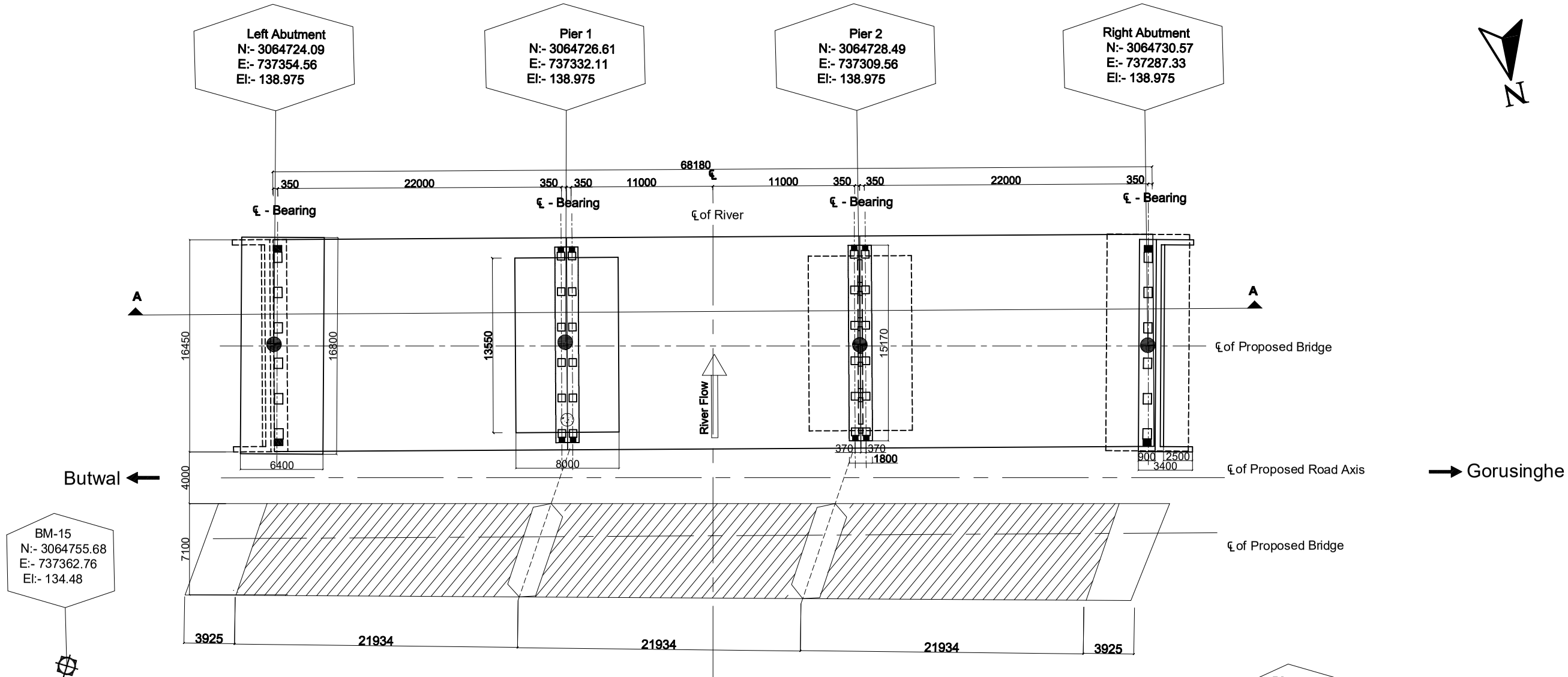

Layout Plan
Scale:-1:300

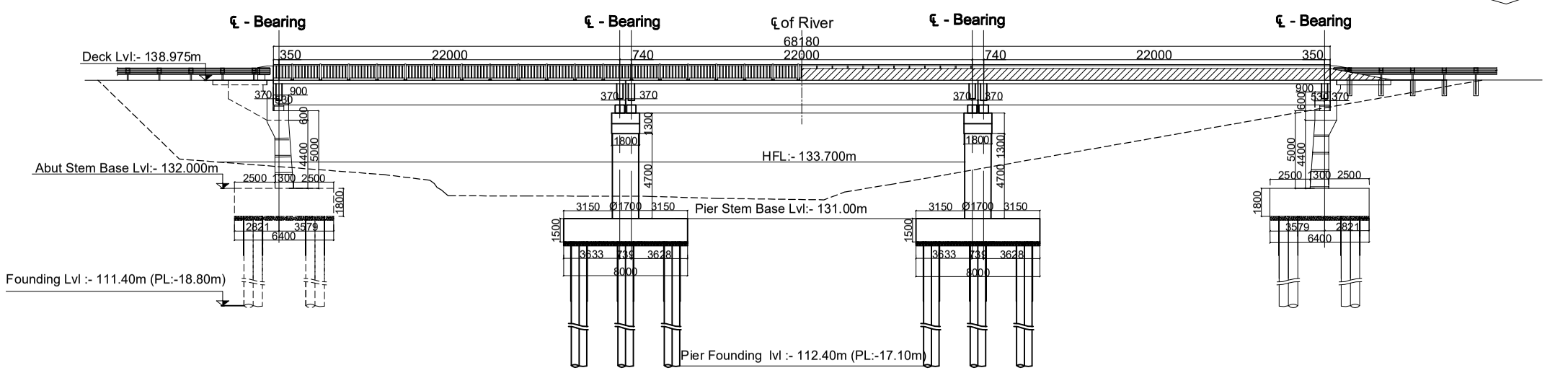

Section at A-A
Scale:-1:300

Government of Nepal Ministry of Physical Infrastructure and Transport **Department of Roads** **Project Directorate Office (ADB)** **SASEC Highway Improvement Project-** **Project Preparatory Consultant (SHIP-PPC)** **ADB Loan No: 3722-NEP**	**CONSULTANT:** Soosung Engineering Co. Ltd, Korea in association with ERMC P (Ltd) and TE-Tech Studio of Engineeering Nepal	**IMPLEMENTING AGENCY:** **DOR, DCID** **ROAD NAME:** **East West Highway (H01)** **Butwal - Gorusinghe Section**	**SHEET TITLE:** Layout Plan of **Satgadi 1 Bridge** (46/H001/282_A)	**SCALE:** As Shown		**NAME**	**SIGNATURE**	**REV NO.**	**DESCRIPTION**	**DATE:** November , 2022 **DWG.NO.:** 292_Satgadi **SHEET NO.:** 27/28
					Designed by:	Saroj Bhattarai				
					Checked by:	P. Upadhyaya				
					Approved by:	Dr. T.H.Choi				

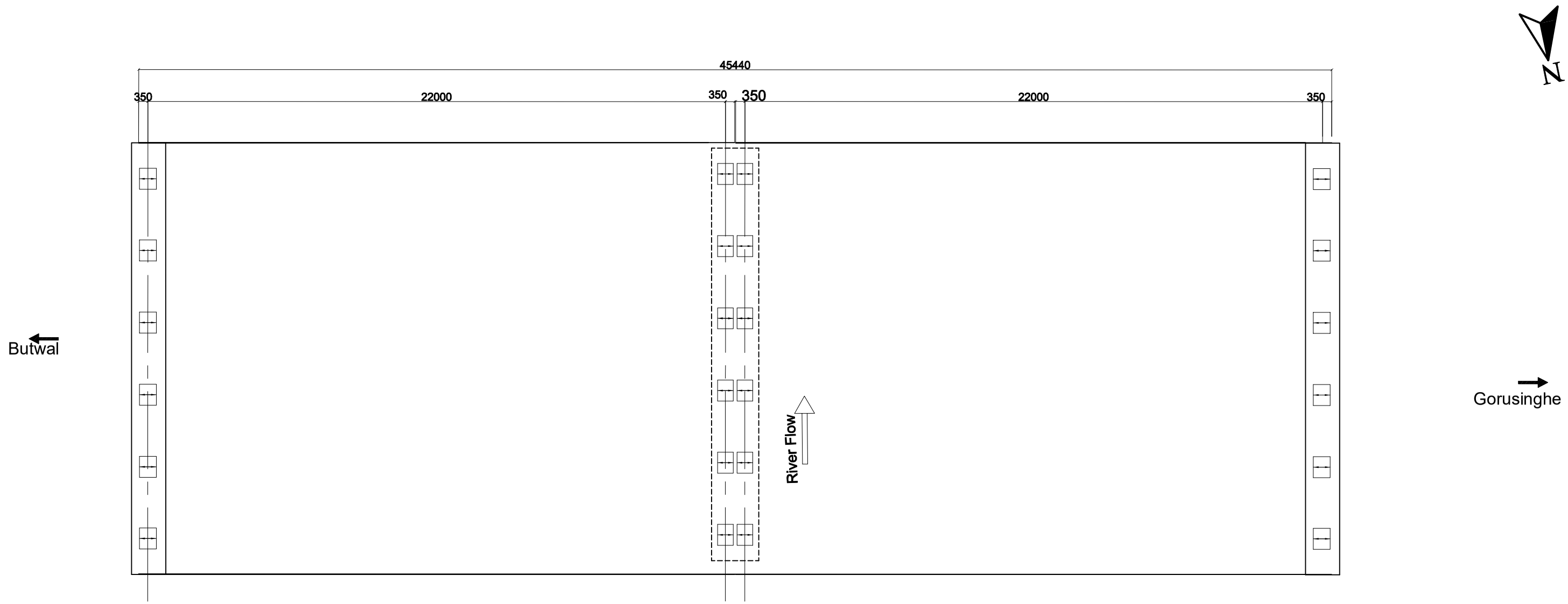

Layout of Bearing
Scale:-1:150

Legend

Elastomeric bearing.
Partial movement allowed in longitudinal direction.
Restrained to transverse movement.Free to rotate in any direction.

Fixed Pot-bearing.
Restrainde to lateral movement,Free to rotate in aney direction.

Free Pot-bearing.
Partial movement allowed in longitudinal direction.
Restrained to transverse movement.Free to rotate in any direction.

Government of Nepal Ministry of Physical Infrastructure and Transport **Department of Roads** **Project Directorate Office (ADB)** **SASEC Highway Improvement Project-** **Project Preparatory Consultant (SHIP-PPC)** **ADB Loan No: 3722-NEP**	**CONSULTANT:** Soosung Engineering Co. Ltd, Korea in association with ERMC P (Ltd) and TTE-Tech Studio of Engineeering Nepal	**IMPLEMENTING AGENCY:** **DOR, DCID** **ROAD NAME:** **East West Highway (H01)** **Butwal - Gorusinghe Section**	**SHEET TITLE:** Layout Plan of **Satgadi 1 Bridge** (46/H001/282_A)	**SCALE:** As Shown		**NAME**	**SIGNATURE**	**REV NO.**	**DESCRIPTION**	**DATE:** November , 2022 **DWG.NO.:** 292_Satgadi **SHEET NO.:** 28/28
					Designed by:					
					Checked by:	P. Upadhyaya				
					Approved by:	Dr. T.H.Choi				

Government of Nepal

Ministry of Physical Infrastructure and Transport

Department of Roads

Project Directorate (ADB)

Implementing Agency : DOR, DCID

Project Preparatory Consultants

Under

SASEC Highway Improvement Project (SHIP-PPC)

(ADB Loan No: 3722 Nep)

Contract No. SHIP/PPC/2020/02

Satgadi-2. Bridge(46-H001-293_A)

St. Ch : 596+315.40 ~ End Ch : 596+346.00

Detailed Drawing

Butwal - Gorusinghe Sector

November,2022

CONTENTS

S.No.	DESCRIPTION	DWG. NO	NO. OF SHEETS
1.	General Notes.	1 - 2	2
2.	Topographic Map.	2.1	1
3.	General Arrangement.	3 - 4	2
4.	Bore Logs.	5	1
5.	Detail of Superstructure.	6	1
6.	Reinforcement Details of Slab.	7	1
7.	Prestressing Details of Main Girder .	8	1
8.	Anchorage Details.	9	1
9.	Untensioned Reinforcement Details of Girder.	10	1
10.	Bar Bending Schedule of Slab & Main Girder.	11	1
11.	Reinforcement Details of Intermediate Cross Girder.	12	1
12.	Reinforcement Details of Cross Girder.	13	1
13.	Plan of Abutment.	14	1
14.	Reinforcement Details of Abutment.	15	1
15.	Bar Bending Schedule of Abutment.	16	1
16.	Reinforcement Details of Abutment Pile.	17	1
17.	Reinforcement Detail of Approach Slab.	18	1
18.	Miscellaneous Detail.	19-20	2
19.	River Training Work.	21	1
20.	Plan & Profile.	22-23	2
21.	Cross Section.	23.1-23.2	2
22.	Layout Plan.	24-25	2

GENERAL NOTES

General

- Metric system of measurement is used in all drawings. Elevation and Stations are shown in Meter and all other dimensions are in Millimeters, except indicated otherwise.
- In case of contradictions, specific notes on respective sheet shall supersede the General Notes
- No dimensions shall be scaled from the drawings. Only written dimensions shall be followed. Any doubtful matter in the drawings shall be brought to the attention of the engineer-in-charge for any corrections before the execution of the works.

Design Notes

The design codes followed:
For RCC and PSC concrete - IRC:112-2020
For loads and stresses - IRC:6-2017
For substructure and foundations - IRC:78-2014
For seismic design - IRC:SP:114-2018. Seismic zone V. Importance factor 1.2

Design live loads:

For urban area bridges
Case 1 - 3 lanes of class A + pedestrians; 1 lane of class A + 1 lane of class 70R + pedestrians
Case 2 - 4 lanes or class A; 2 lanes of class A + 1 lane of class 70R. No pedestrians

For non-urban area bridges
Case 1 - 2 lanes of class A + pedestrians; 1 lane of class 70R + pedestrians
Case 2 - 3 lanes of class A; 1 lane of class A + 1 lane of class 70R. No pedestrians.

Notes on Concrete

In General the grade of concrete to be used shall be as follows:
(**unless otherwise specified in the respective drawing sheets**)

For superstructure deck slab, wearing course, crash barriers:	M30
For raised footpaths:	M25
For main girders and cross girders of superstructure with PSC girders:	M45
For main girders and cross girders of superstructure with RCC girders:	M30
For substructure: Abutment stem, ballast wall, stoppers, bearing pedestals, pier cap, pier stem and pile caps:	M30
For bored and cast in situ piles:	M35
For leveling course:	M15

The maximum size of aggregate shall be as per IRC:112-2020, clause 18.4.4.2

Admixture to the concrete

To improve workability and/or increase initial setting time of concrete and cement grout, admixture conforming to IS:9103 and ASTM C-494, (Type F - High Range Water Reducing admixture) can be added in appropriate dosage, subject to their satisfactory proven use.

Clear Cover to reinforcement (unless otherwise specified in the respective drawing sheets)

Reinforcement bars of all components of the superstructure:	40mm
Prestressing ducts or strands in superstructure:	75mm
All components of abutment, pier, pile caps and piles (except stoppers and bearing pedestals):	75mm
Bearing pedestals and Stoppers:	50mm

Cover shall be ensured with the use of properly sized cement concrete blocks which can be secured to the re-bars or other devices approved by the engineer-in-charge. Use of loose stones or wooden pieces is not permitted.

Notes on Reinforcement

- All reinforcing steel bars shall be High Strength Deformed bars with grade Fe500 conforming to IS:1786
- Laps and Splices shall conform to IRC:112-2020, Clause 15.2.5. Use of mechanical coupler is permitted upon approval by the engineer.

Notes on Prestressing

- Prestressing strands shall be Class-2, uncoated 7 ply, low relaxation type with ultimate tensile stress 1862 N/mm², conforming to IS:14268.
- The diameter of strands, their number in a tendon and the total jacking force to be applied is specified in the respective drawing sheet. All the initial and long term losses are already incorporated in design.
- Corrugated HDPE Sheathing ducts shall be used with the minimum internal diameter not less than three times the cross sectional area of the tendon. The wall thickness and other properties of the sheathing shall be as per IRC:112-2020, clause 13.4.3
- The specified profile and the alignment of the ducts shall be strictly maintained by properly securing the ducts to the re-bars. If required, pieces of re-bars can be added or the re-bars slightly repositioned or bent to maintain the profile and alignment, with approval of the engineer-in-charge.
- The jacking equipment shall be fitted with appropriate force measuring device and shall be regularly checked and calibrated as prescribed by the manufacturer.
- Jacking shall be done from both ends simultaneously and gradually, recording the elongation both sides. The expected final elongation mentioned in the respective drawings sheet is based on modulus of elasticity of the strands (Es) equal to 1.95x10^5 MPa. If the Es of supplied strands is different then the elongation values shall be recalculated by multiplying the Design values of elongation by the ratio of Design Es / Actual Es.
- In case the total elongation is not achieved at the prescribed jacking force, the jacking operation can be continued until the force reaches the maximum allowable value. If the required elongation is achieved at jacking force lower than the prescribed value, the jacking operation shall continue until the prescribed force is reached, provided the Sum of the additional elongations thus achieved is not more than 5% of the sum of the prescribed elongations.
- In adverse condition to any of the cases above, the jacking operation shall be stopped, the tendons removed and this matter reported to the engineer-in-charge for further instruction. The jacking force should NEVER exceed the Maximum allowable value.

Grouting

- The tendons which satisfy the above conditions shall be grouted properly, ensuring the duct is free of any foreign material and there is no leak or damage around the joints between the anchors and the ducts. Grouting can be normally done immediately after successful completion of tensioning operations and shall not be delayed by more than 5 days of tensioning of the cables.
- The grout shall be prepared with Ordinary Portland cement with suitable expansive admixture approved by the engineer. Admixture containing chloride and nitrate are not permitted. The water/cement ratio shall not be more than 0.48. Retempering of the grout shall not be permitted. The grout shall be mixed with mechanical mixers and shall be continuously kept agitated until pumped in.

Stages and sequence of Prestressing

- The Precast composite girders shall be prestressed in two stages. The specified number of the tendons shall be tensioned in the prescribed sequence shown in the respective drawing sheet.
- The remaining tendons shall be tensioned after specified days after casting of the deck slab, in the sequence shown in the respective drawing sheet.
- The prestressing of the precast girder shall be started only after confirming that the cube specimen has achieved 100% of the prescribed compressive strength. No early prestressing allowed.

Construction methodology and sequence for Precast Prestressed Composite superstructure

- The main girders are be precast near the bridge site at suitable location (approach road or dry river bed, if available) on well prepared casting yard. The choice of location also depends upon the equipment available for lifting or launching the girders. After completion of the prestressing works the girders are either lifted by suitable cranes or pushed/launched with the help of rails and jacks or launching girders and placed carefully over the already completed substructure. Care shall be taken that all the preparatory works for the bearings are done properly before the launching/placing of the girders.
- Lifting shall be done only by the hooks provided at both ends. In case of jacking the jacking points shall be only just under the location of the hooks. No support, lifting or jacking is allowed at any other section of the girder
- After placing all the main girders and finishing the works on the bearings, the formwork for deck slab and cross girders are prepared. All the formwork for deck slab and cross girders shall be supported by the main girders. The main girders shall remain un-propped during casting of the deck slab. Similarly there shall be no false-work or props from the ground or part of substructure during casting of the deck slab.
- The Contractor shall ensure stability of the girders during all stages of construction.
- Dimensional tolerances for the precast girders shall be as per IRC:SP:71-2018, Clause 4.10. If not prescribed otherwise, transportation and handling operation shall follow the guidelines in Clause 4.9 of the same documents.
- The prescribed time-line for construction of the superstructure is as follows

Prestressing of Precast Girder only (Stage 1)	After 28 days of casting or confirming 100% compressive strength of concrete
Lifting/Launching of the Girder	Within 14 days of first stage prestressing
Casting of the Deck Slab	Within 14 days of placing of girder over substructure
Prestressing of Girder (Stage 2)	After 14 days of casting of deck slab
Casting of Footpath, Crash Barrier, Wearing Course etc	Preferably within 7 days but not later than 14 days of Second stage prestressing

Deviation from the above time-line is subject to approval by the engineer. No other vehicle except the concreting apparatus are allowed on the deck until the deck slab has attained its full specified strength.

Construction methodology for Cast-in-situ RCC superstructure

- Construction of Monolithic cast in situ RCC superstructure shall follow the standard practices. The falsework for the girders and deck slab are supported on the ground and removed after specified time period.

Notes on Bearings

- The contractor shall supply, provide and install the bearings designed according to the loadings and other relevant information provided in the drawings or BOQ.
- The dimension and number of layers of the Elastomeric bearings shown in the drawings are tentative. The bearings shall be designed, fabricated, tested and installed as per IRC:83 - 2018, Part-2 for elastomeric bearing and Part-3 for Pot-PTFE bearings, as the case applies.

Notes on Foundation and Substructure

- Standard Specifications and Special provisions to the Standard Specifications (if any) and specific notes on the drawings shall be followed for the construction of the abutments, piers and foundations.
- Backfill behind the abutment shall be places only after the concrete has achieved full 28 days strength. Heavy compaction equipment weighing more than 10 Ton shall not be used within 2.0 meters from the back of the abutment until all the works on superstructure is completed.
- The graded backfill behind the abutment shall be at a slope not steeper than 62 degrees, starting from the back of the footing. The back fill material dry density shall be within 1900 to 2200 kN/m³ and moisture content between 9 to 15%
- In case of new bridge adjacent to the existing bridge, care shall be taken not to render any damage to the elements of the existing bridge. Particular attention shall be paid to the foundation of the existing bridge. The contractor shall ensure that excavation for the foundation of the new bridge does not cause instability or settlement of the foundation of the existing bridge.
- If the existing bridge has a shallow foundation, the contractor shall protect the existing foundation by sheet piling or any other suitable means to the satisfaction of the engineer, before excavating for the foundation of the new bridge.

General Note: (For all Pile Foundation)

- Drilling/Boring works for pile is allowed only with rotary or oscillator type drilling equipment.No percussion method is allowed .Stability of borehole shall be ensured by the use of temporary casing.Use of other methods of borehole stability is subject to approval by the engineer, but in such case use of water/air/chemical jetting for boring process shall not be allowed.
- In case of drilling/boring without temporary casing,the contractor should ensure the stability and uniformity of the borehole before lowering the reinforcement cage and during concreting.
- Boring/Drilling of the piles is preferred in a staggered pattern.Boring/Drilling for any pile shall not commence before 24 hours of completion of concreting of any pile within a radius of 6 meters from its center.
- In case of drilling/boring without temporary casing , the pile shall be lined with 6mm thick permanent casing from the bottom of the pile cap down to 0.5 m below the maximum scour depth or 1.5 m whichever is larger.

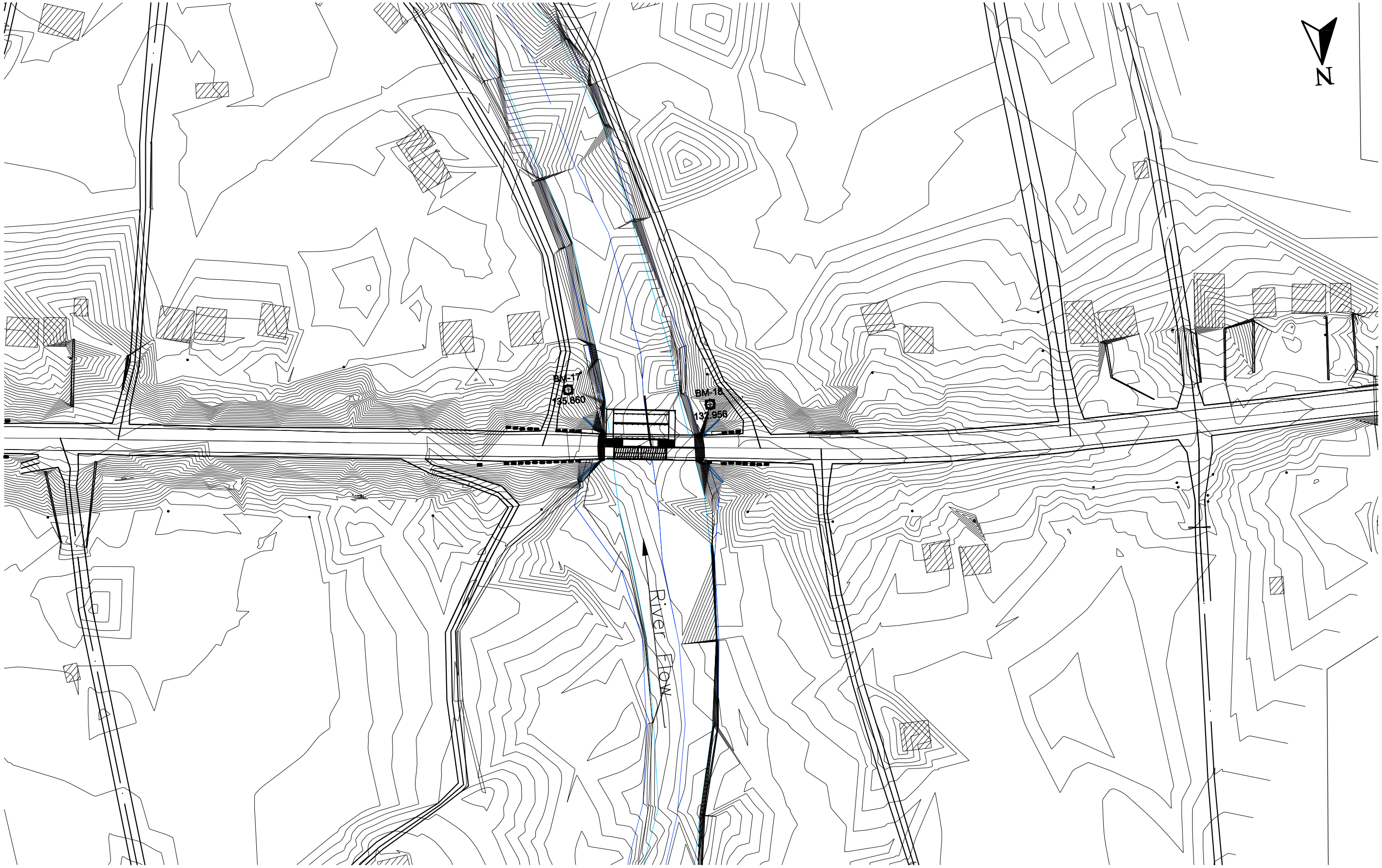

Government of Nepal Ministry of Physical Infrastructure and Transport **Department of Roads** **Project Directorate Office (ADB)** **SASEC Highway Improvement Project-** **Project Preparatory Consultant (SHIP-PPC)** **ADB Loan No: 3722-NEP**	**CONSULTANT:** Soosung Engineering Co. Ltd, Korea in association with ERMC P (Ltd) and TPE-Tech Studio of Engineeering Nepal	**IMPLEMENTING AGENCY:** **DOR, DCID** **ROAD NAME:** **East West Highway (H01)** **Butwal - Gorusinghe Section**	**SHEET TITLE:** Topographic Map of **Satgadi-2 Bridge** (46/H001/293_A)	**SCALE:** 1:1		**NAME**	**SIGNATURE**	**REV NO.**	**DESCRIPTION**	**DATE:** November , 2022 **DWG.NO.:** 293_Satgadi-2 **SHEET NO.:** 2.1/25
					Designed by:	Saroj Bhattarai				
					Checked by:	P. Upadhyaya				
					Approved by:	Dr. T.H.Choi				

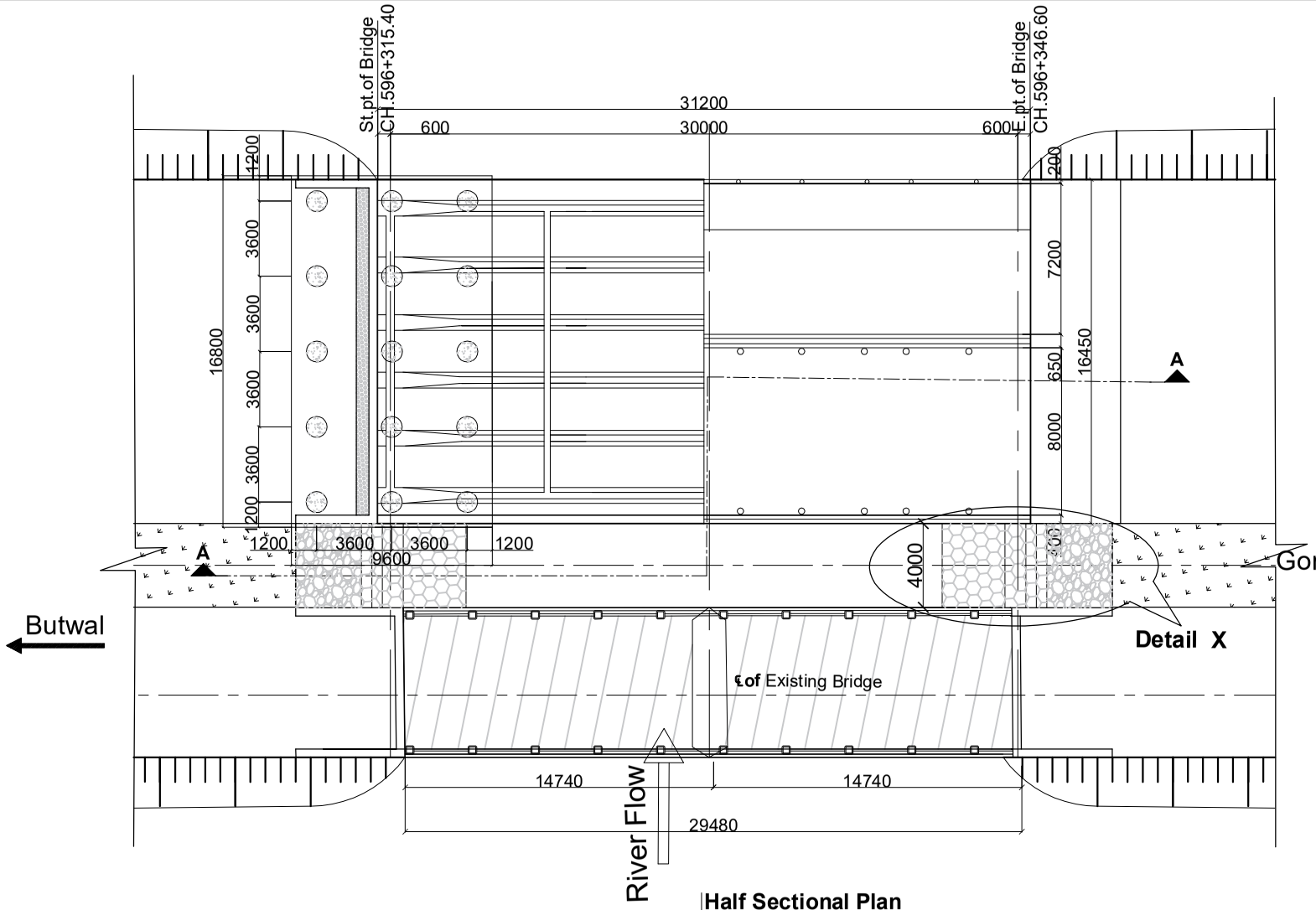

Half Sectional Plan
Scale:-1:300

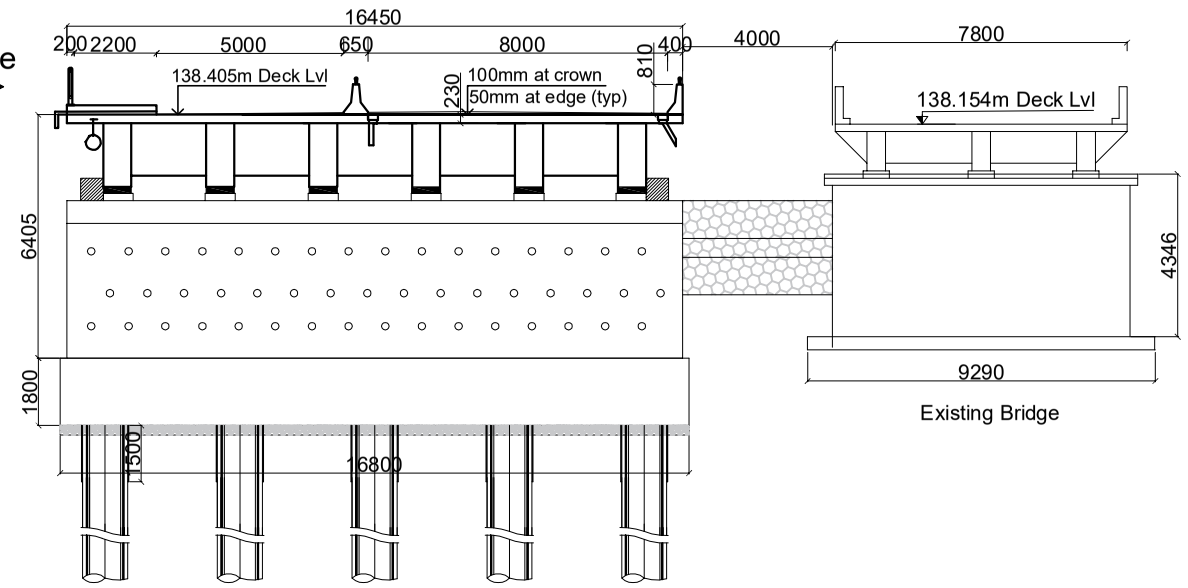

Elevation Of Abutment
Scale:-1:200

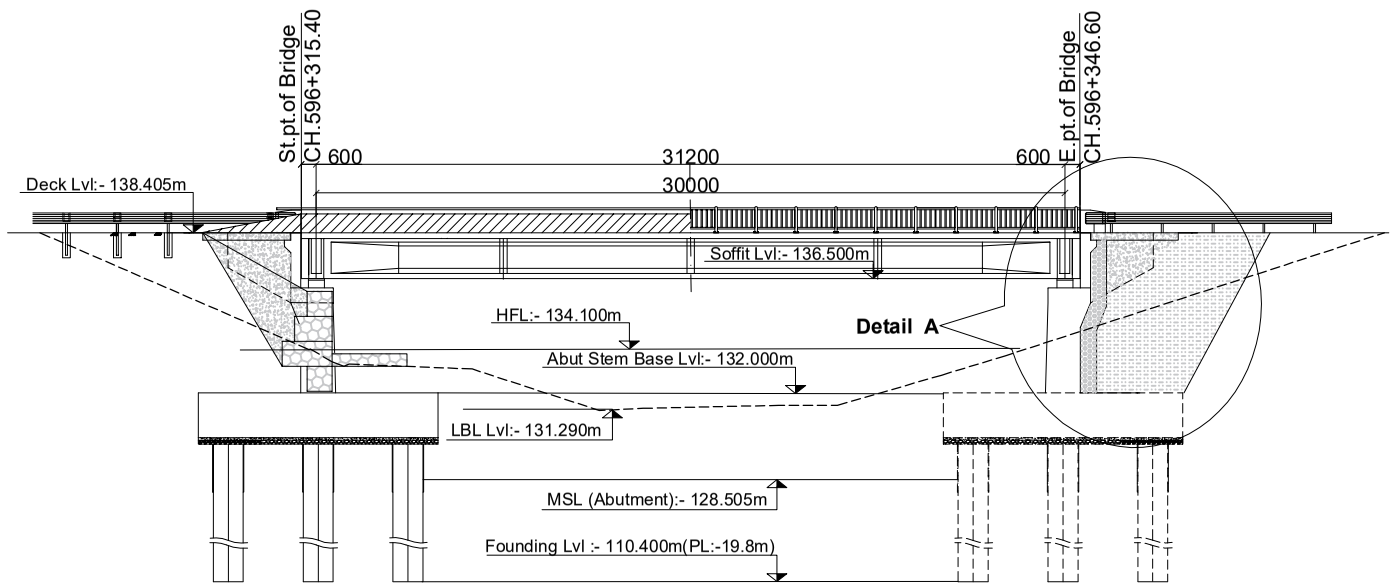

Half Sectional Elevation
Scale:-1:300

Note :-
- MSL :- Maximum Scour Level
- HFL :- High Flood Level
- LBL :- Lowest Bed Level
- RL :- Reduced Level
- PL :- Pile Length

	Name(NEC Number)	Signature
P. Engineer	P. Upadhyaya (Civil A 675)	
Structure Engineer	K.P.Wagle(Civil A 127) / P.Shrestha(Civil A 676) / S.Bhattarai (Civil A 904)	
Hydrologist	Dr. P.C. Jha(Civil A 166) / S. Adhikari (Civil A 408)	
Geotechnical Engineer	A. Adhikari(ka 199) / Dr. V . R. S. Shahi	

Government of Nepal Ministry of Physical Infrastructure and Transport **Department of Roads** **Project Directorate Office (ADB)** **SASEC Highway Improvement Project-** **Project Preparatory Consultant (SHIP-PPC)** **ADB Loan No: 3722-NEP**	**CONSULTANT:** Soosung Engineering Co. Ltd, Korea in association with ERMC P (Ltd) and TSC-Tech Studio of Engineeering Nepal	**IMPLEMENTING AGENCY:** **DOR, DCID** **ROAD NAME:** **East West Highway (H01)** **Butwal - Gorusinghe Section**	**SHEET TITLE:** General Arrangement of **Satgadi-2 Bridge** (46/H001/293_A)	**SCALE:** As Shown		**NAME**	**SIGNATURE**	**REV NO.**	**DESCRIPTION**	**DATE:** November , 2022
					Designed by:	Saroj Bhattarai				**DWG.NO.:** 293_Satgadi-2
					Checked by:	P. Upadhyaya				
					Approved by:	Dr. T.H.Choi				**SHEET NO.:** 03/25

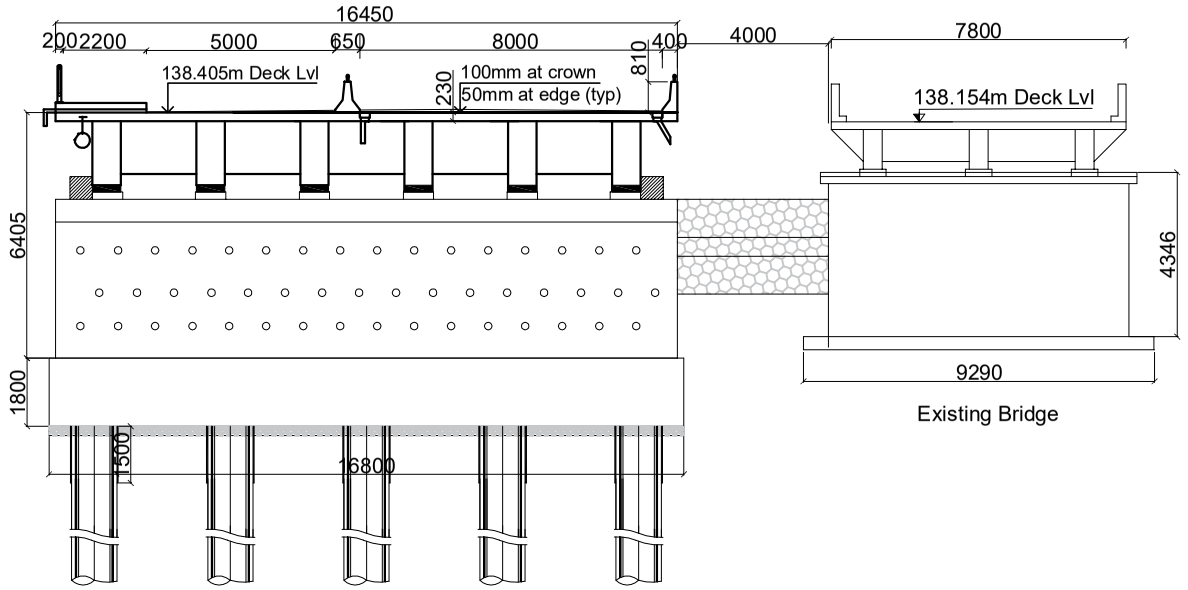

Elevation Of Abutment
Scale:-1:200

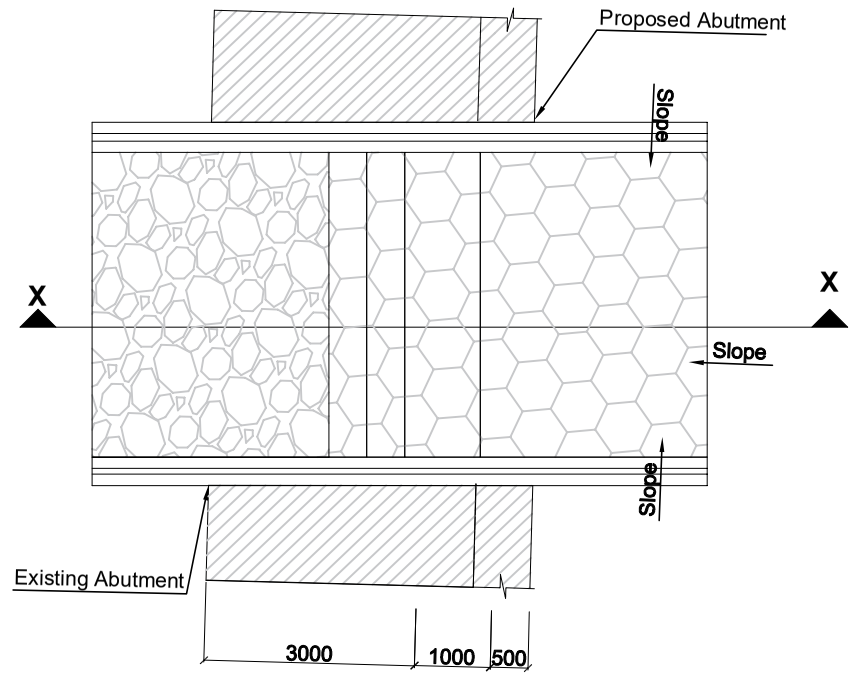

Detail Plan of X
(Transition Between Approch Embankmant)
Scale:-1:100

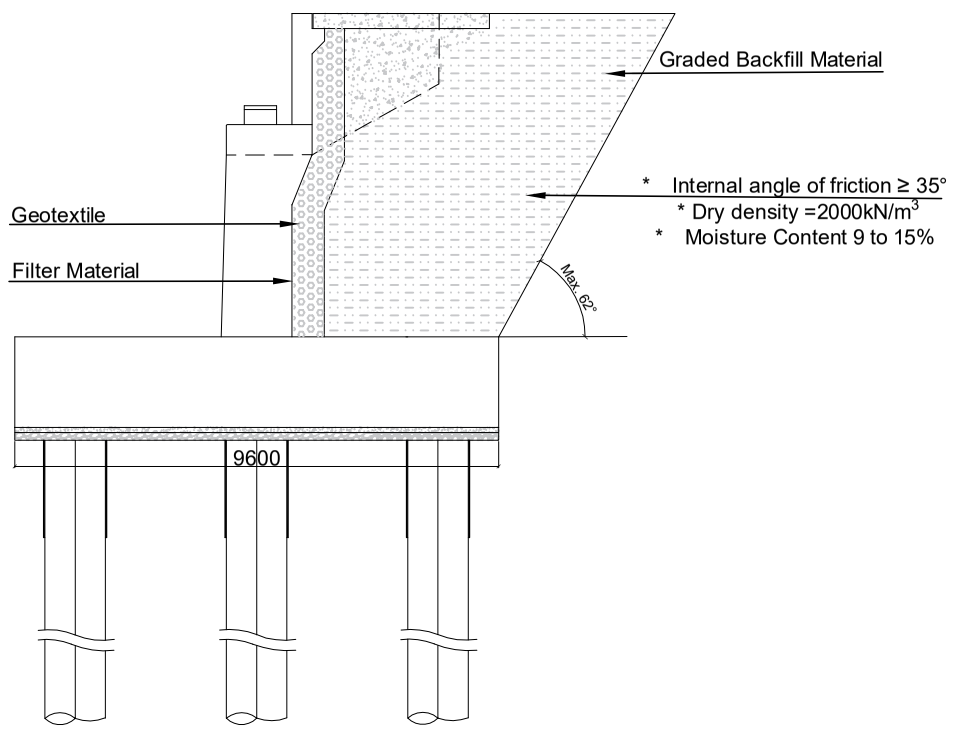

Detail of A
Scale:-1:150

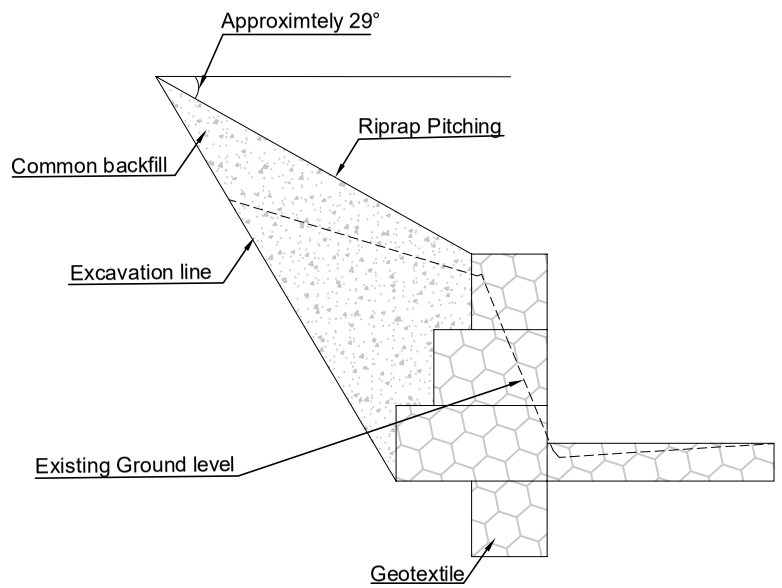

Section at X-X
Scale:-1:100

	Name(NEC Number)	Signature
P. Engineer	P. Upadhyaya (Civil A 675)	
Structure Engineer	K.P.Wagle(Civil A 127) / P.Shrestha(Civil A 676) / S.Bhattarai (Civil A 904)	
Hydrologist	Dr. P.C. Jha(Civil A 166) / S. Adhikari (Civil A 408)	
Geotechnical Engineer	A. Adhikari(ka 199) / Dr. V . R. S. Shahi	

Government of Nepal Ministry of Physical Infrastructure and Transport **Department of Roads** **Project Directorate Office (ADB)** **SASEC Highway Improvement Project-** **Project Preparatory Consultant (SHIP-PPC)** **ADB Loan No: 3722-NEP**	**CONSULTANT:** Soosung Engineering Co. Ltd, Korea in association with ERMC P (Ltd) and TE-Tech Studio of Engineeering Nepal	**IMPLEMENTING AGENCY:** **DOR, DCID** **ROAD NAME:** **East West Highway (H01)** **Butwal - Gorusinghe Section**	**SHEET TITLE:** General Arrangement of **Satgadi-2 Bridge** (46/H001/293_A)	**SCALE:** As Shown		**NAME**	**SIGNATURE**	**REV NO.**	**DESCRIPTION**	**DATE:** November , 2022 **DWG.NO.:** 293_Satgadi-2 **SHEET NO.:** 04/25
					Designed by:	Saroj Bhattarai				
					Checked by:	P. Upadhyaya				
					Approved by:	Dr. T.H.Choi				

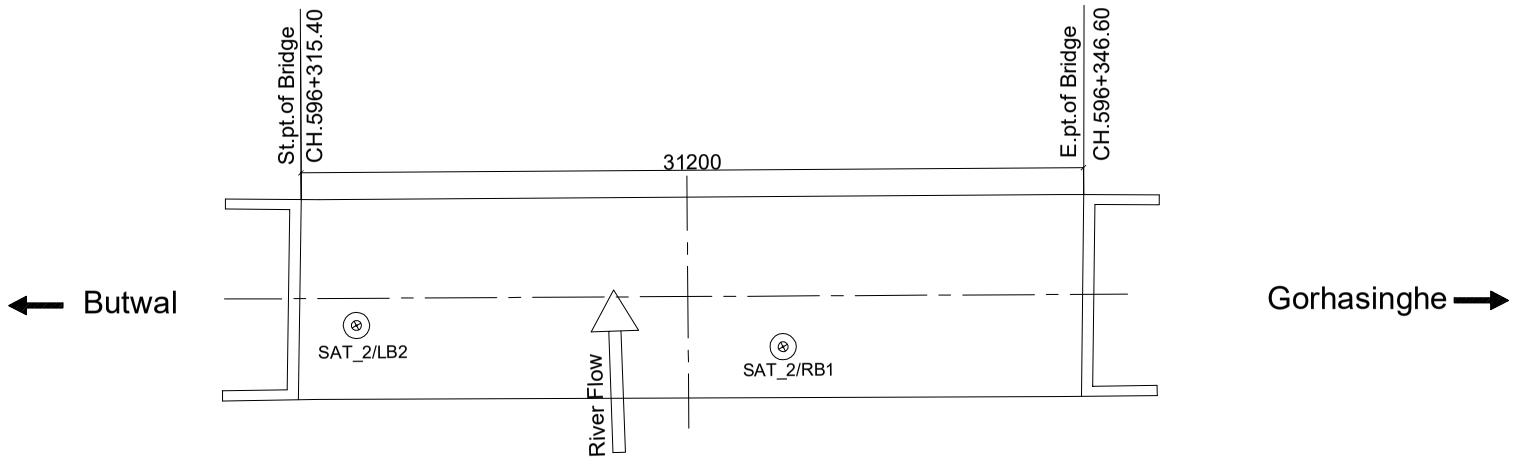

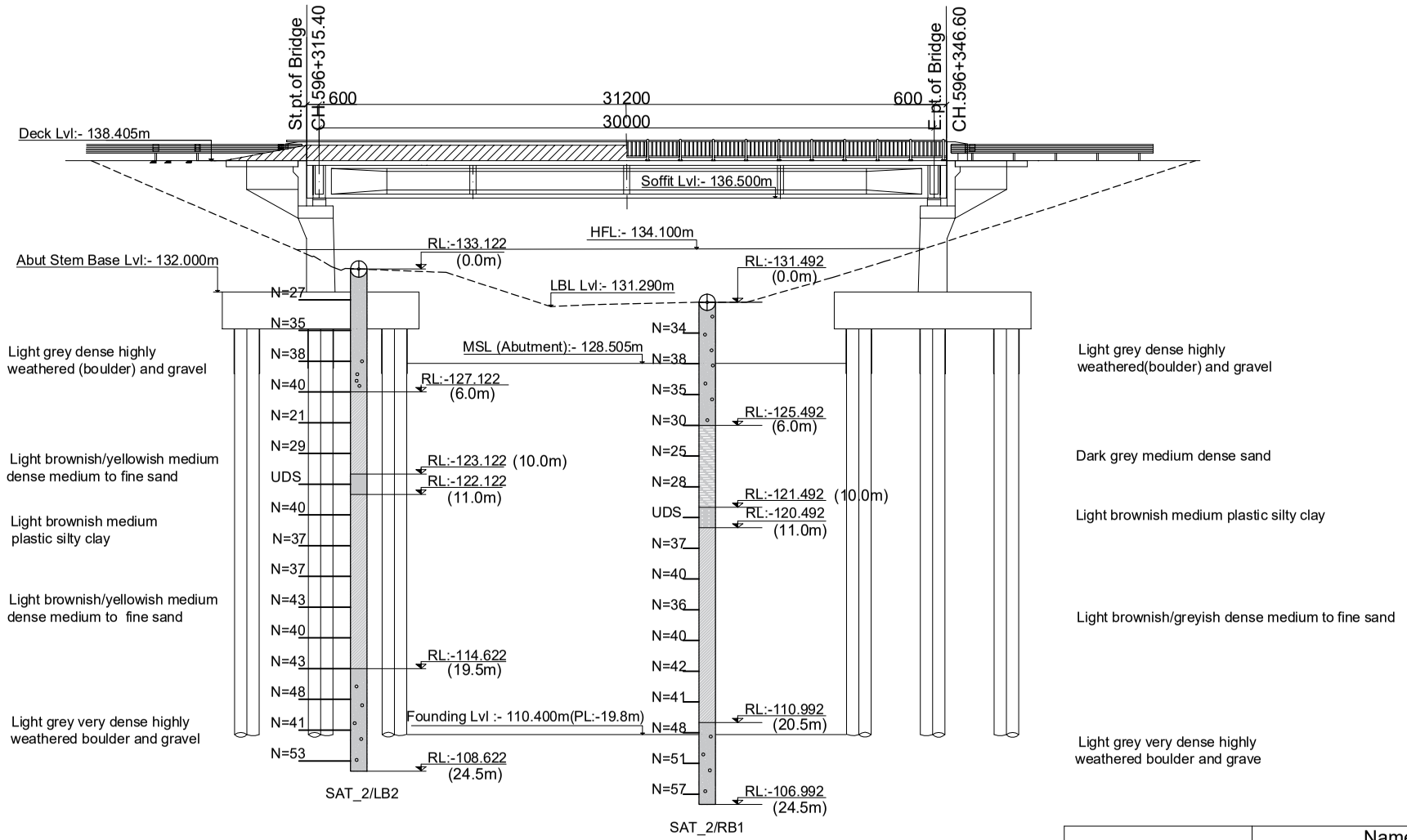

Bore Log Detail
Scale:-1:300

Borehole No : SAT/LB02
Easting : 83°24' 14.53 " Northing : 27° 41' 10.18" Elevation, m : 131.400
Borehole No : SAT/RB01
Easting : 83° 24' 13.89" Northing : 27° 41' 10.38" Elevation, m : 131.492

Note :-
MSL :- Maximum Scour Level
HFL :- High Flood Level
LBL :- Lowest Bed Level
RL :- Reduced Level
PL :- Pile Length

NOTE ON SUB-SOIL PROFILE
The sub-soil profile shown here is based on information obtained from the investigation bore-holes at the locations as shown.The actual soil type away from the vicinity of the boreholes may differ .

Location	Design Pile Length m	Design Working load on pile (non - seismic casse)kn	Allowable Bearing Capacity on pile (Scour case) kn	Allowable Bearing Capacity of the Pile (Non Scour case)kn
Abutment	19.8	1970	2537	2711
Pier	0	0	0	0

	Name(NEC Number)	Signature
P. Engineer	P. Upadhyaya (Civil A 675)	
Structure Engineer	K.P.Wagle(Civil A 127) / P.Shrestha(Civil A 676) / S.Bhattarai (Civil A 904)	
Hydrologist	Dr. P.C. Jha(Civil A 166) / S. Adhikari (Civil A 408)	
Geotechnical Engineer	A. Adhikari(ka 199) / Dr. V . R. S. Shahi	

Government of Nepal
Ministry of Physical Infrastructure and Transport
Department of Roads
Project Directorate Office (ADB)
SASEC Highway Improvement Project-
Project Preparatory Consultant (SHIP-PPC)
ADB Loan No: 3722-NEP

CONSULTANT:
Soosung Engineering Co. Ltd,
Korea
in association with
ERMC P (Ltd)
and
TSE-Tech Studio of Engineeering
Nepal

IMPLEMENTING AGENCY:
DOR, DCID

ROAD NAME:
East West Highway (H01)
Butwal - Gorusinghe Section

SHEET TITLE:
Bore Log
of
Satgadi-2 Bridge
(46/H001/293_A)

SCALE:
1:500

	NAME	SIGNATURE	REV NO.	DESCRIPTION
Designed by:	Saroj Bhattarai			
Checked by:	P. Upadhyaya			
Approved by:	Dr. T.H.Choi			

DATE: November , 2022
DWG.NO.: 293_Satgadi-2
SHEET NO.: 05/25

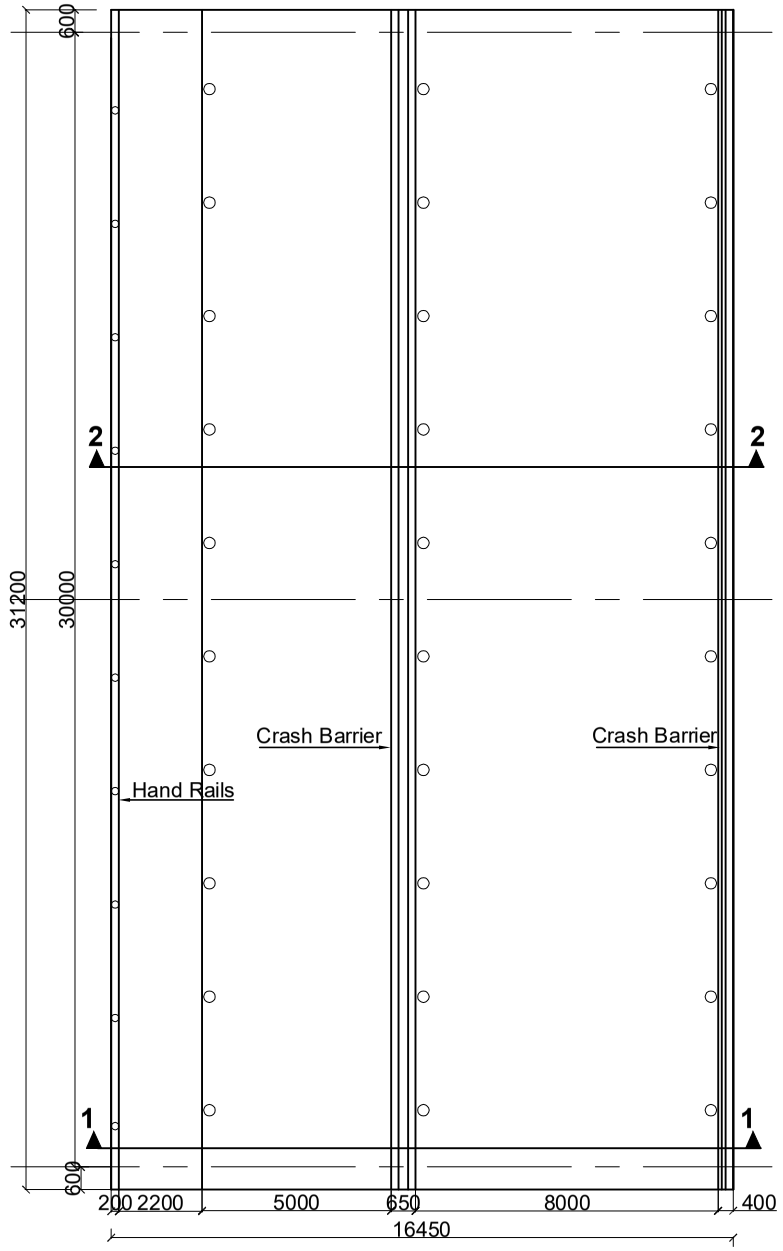

Plan Of Deck
Scale:-1:200

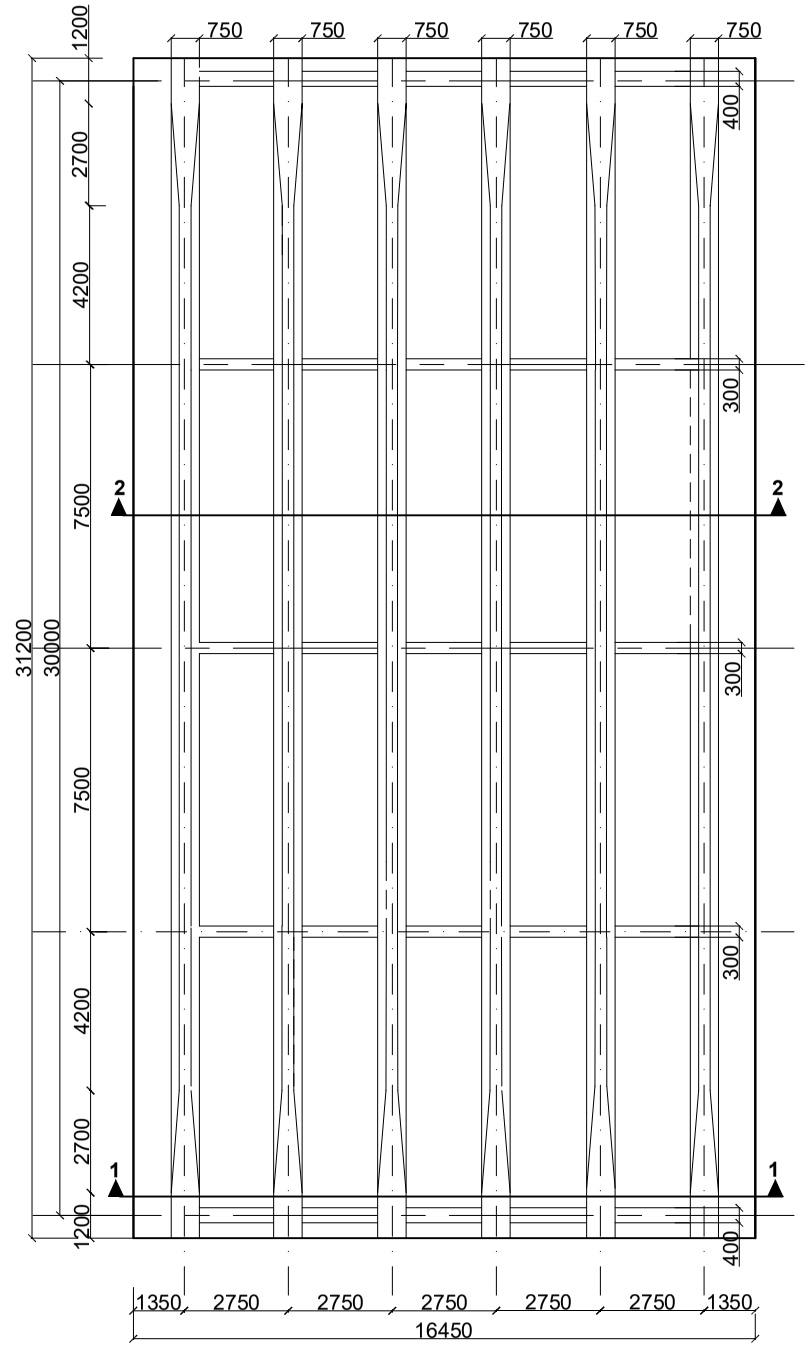

Plan Of Girder
Scale:-1:200

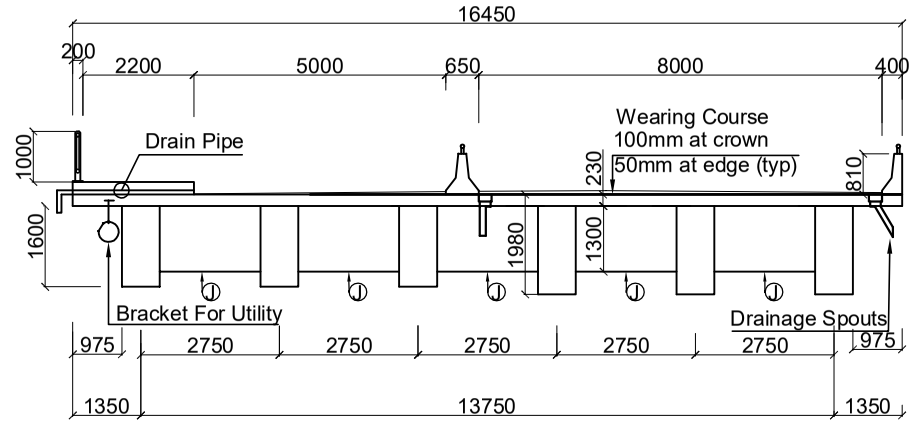

Section At 1-1
Scale:-1:150

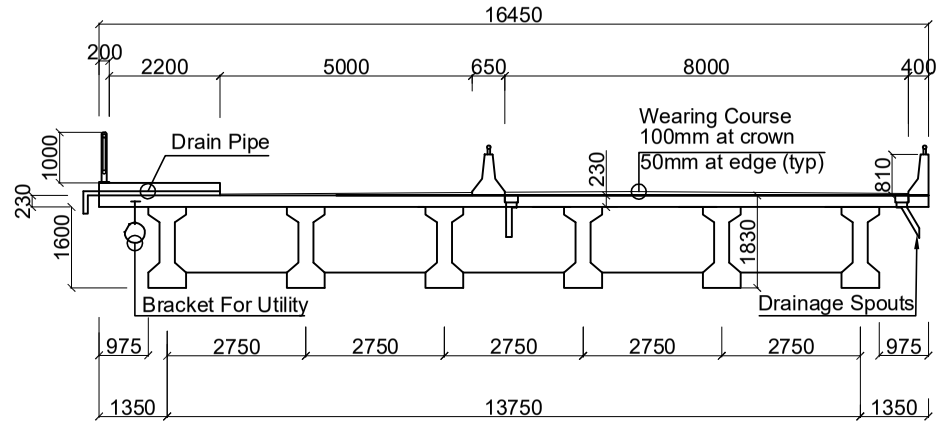

Section At 2-2
Scale:-1:150

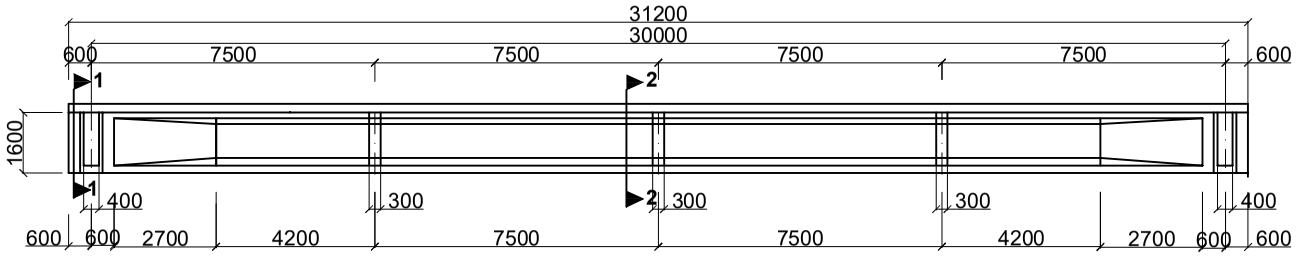

Longitudinal Sectional Elevation
Scale:-1:200

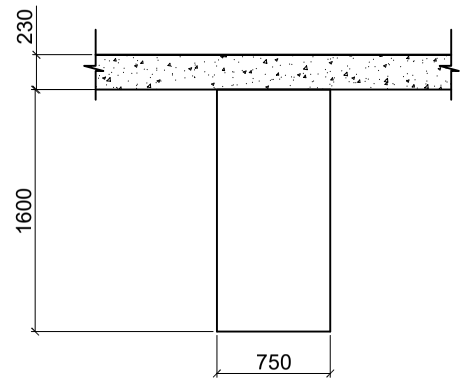

Section 1-1 Main Girder
Scale:-1:50

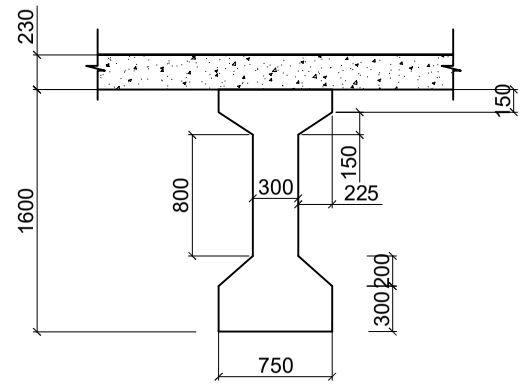

Section 2-2 Main Girder
Scale:-1:50

NOTE:
For maintenance, the deck shall be simultaneously jacked up at the locations marked "J"

NOTE:
The bridge has been designed to safely carry three driving lanes. If required in future the footpath can be used as driving lane, moving the crash barrier to the location of the hand-rails.

Government of Nepal Ministry of Physical Infrastructure and Transport **Department of Roads** **Project Directorate Office (ADB)** **SASEC Highway Improvement Project-** **Project Preparatory Consultant (SHIP-PPC)** **ADB Loan No: 3722-NEP**	**CONSULTANT:** Soosung Engineering Co. Ltd, Korea in association with ERMC P (Ltd) and TTE-Tech Studio of Engineeering Nepal	**IMPLEMENTING AGENCY:** **DOR, DCID** **ROAD NAME:** **East West Highway (H01)** **Butwal - Gorusinghe Section**	**SHEET TITLE:** Details of Superstructure of **Satgadi-2 Bridge** (46/H001/293_A)	**SCALE:** As Shown		**NAME**	**SIGNATURE**	**REV NO.**	**DESCRIPTION**	**DATE:** November , 2022 **DWG.NO.:** 293_Satgadi-2 **SHEET NO.:** 06/25
					Designed by:	Saroj Bhattarai				
					Checked by:	P. Upadhyaya				
					Approved by:	Dr. T.H.Choi				

NOTE:

1.On Shear Connection:
The transverse bars of the deck slab(S2) shall be tied to vertical stirrups of the longitudinal girders.

2.Top Surface of the Main Girder:
Surface to be roughened by wire brush immediately after initial setting. The surface shall be properly cleaned by pressure blower prior to casting of the deck concrete

3.On Wearing Course:
The level of wearing course along the longitudinal direction shall be kept horizontal throughout the length of the deck. The thickness of wearing course towards the ends along the deck shall be increased suitably to compensate for the slope due to hogging of the girder by pre stress.

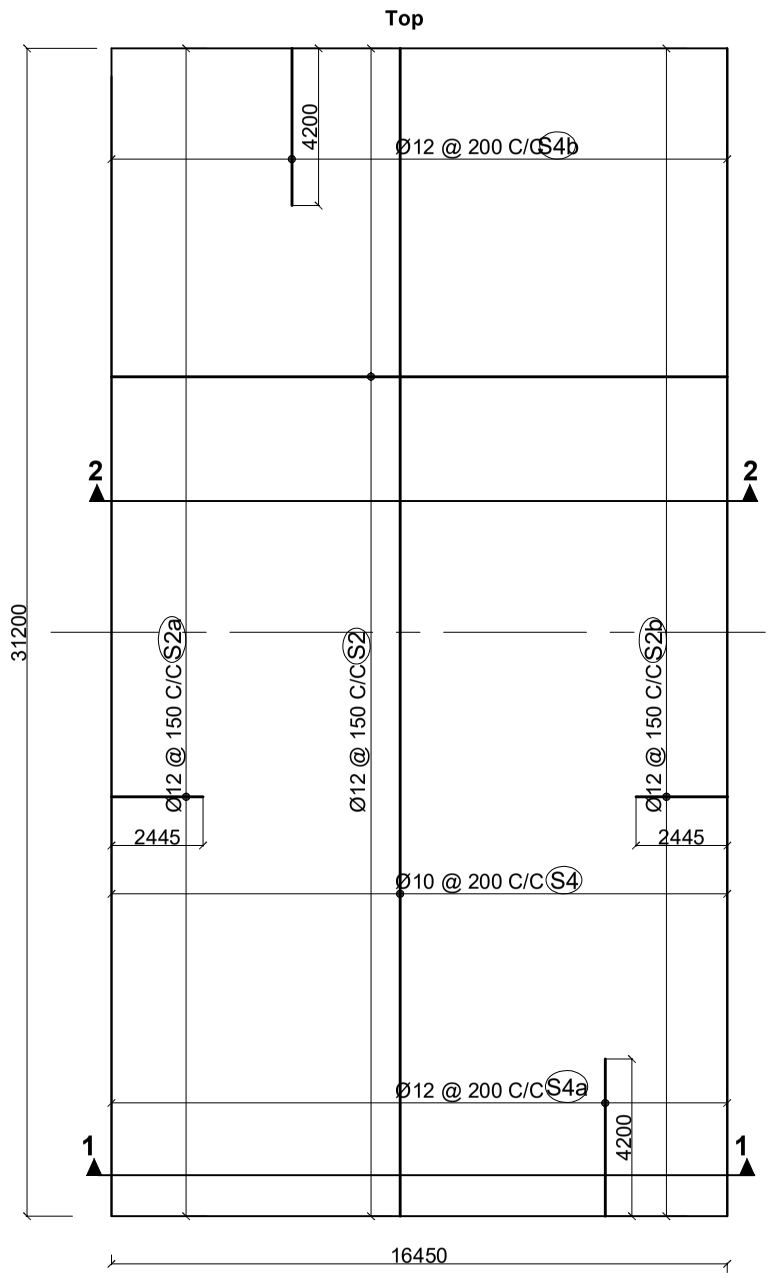

Top Face Reinforcement Details Of Deck Slab
Scale:-1:200

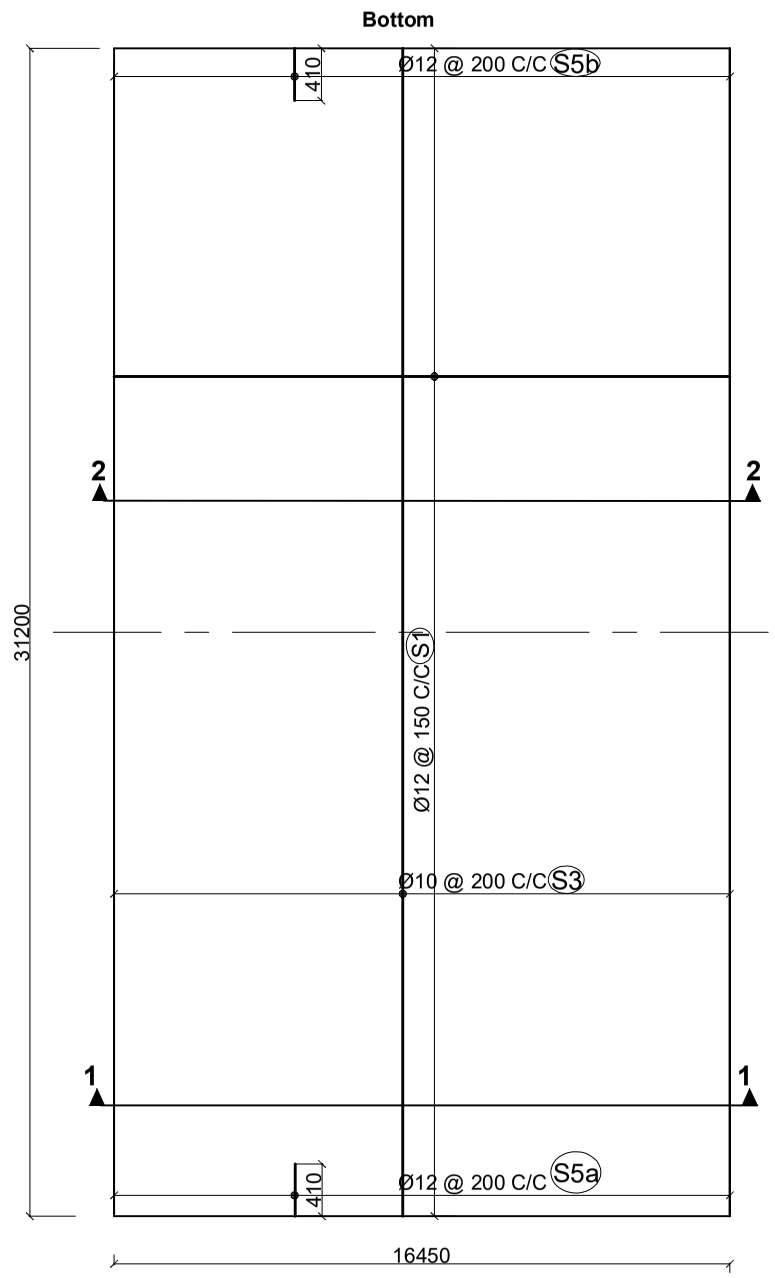

Bottom Face Reinforcement Details Of Deck Slab
Scale:-1:200

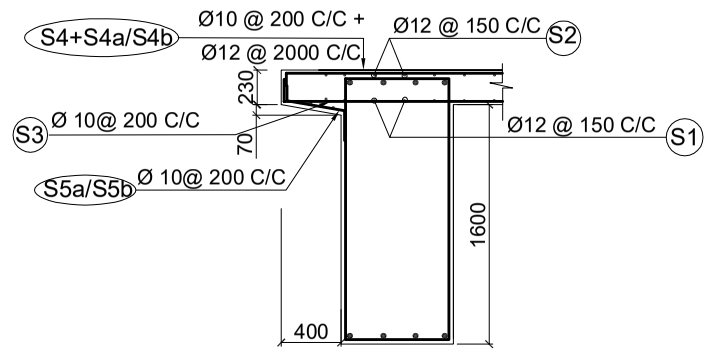

Reinforcement Details at Deck Extension
(Between The Main Girder)

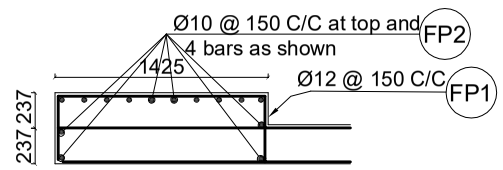

Reinforcement Details At Footpath
Scale:-1:50

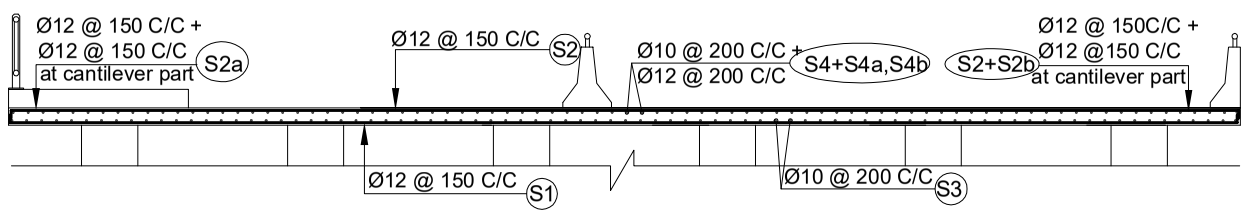

Section 1-1 At Near the Support
Scale:-1:100

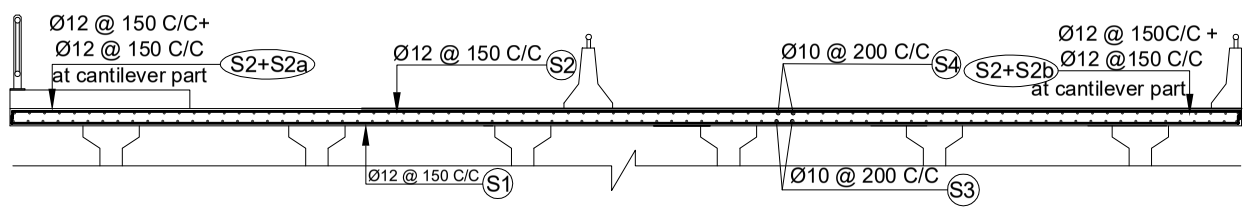

Section 2-2 At Mid Span
Scale:-1:100

Government of Nepal Ministry of Physical Infrastructure and Transport **Department of Roads** **Project Directorate Office (ADB)** **SASEC Highway Improvement Project-** **Project Preparatory Consultant (SHIP-PPC)** **ADB Loan No: 3722-NEP**	**CONSULTANT:** Soosung Engineering Co. Ltd, Korea in association with ERMC P (Ltd) and TTE-Tech Studio of Engineeering Nepal	**IMPLEMENTING AGENCY:** **DOR, DCID** **ROAD NAME:** **East West Highway (H01)** **Butwal - Gorusinghe Section**	**SHEET TITLE:** Reinforcement Details of Slab of **Satgadi-2 Bridge** (46/H001/293_A)	**SCALE:** As Shown		**NAME**	**SIGNATURE**	**REV NO.**	**DESCRIPTION**	**DATE:** November , 2022
					Designed by:	Saroj Bhattarai				**DWG.NO.:** 293_Satgadi-2
					Checked by:	P. Upadhyaya				
					Approved by:	Dr. T.H.Choi				**SHEET NO.:** 07/25

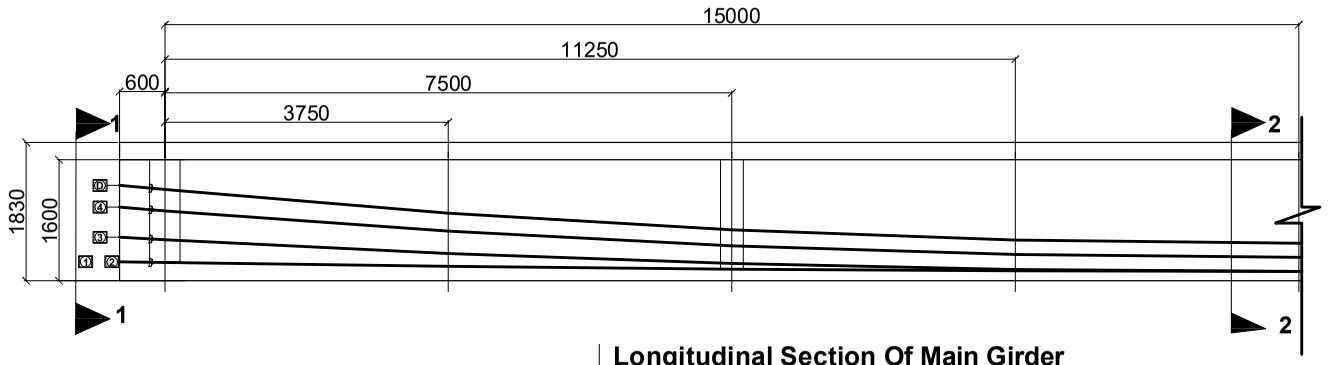

Longitudinal Section Of Main Girder
Scale:-1:100

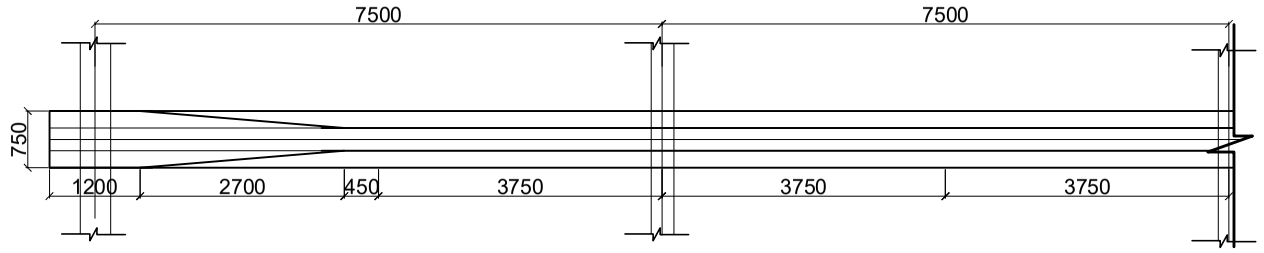

Plan Of Main Girder
Scale:-1:100

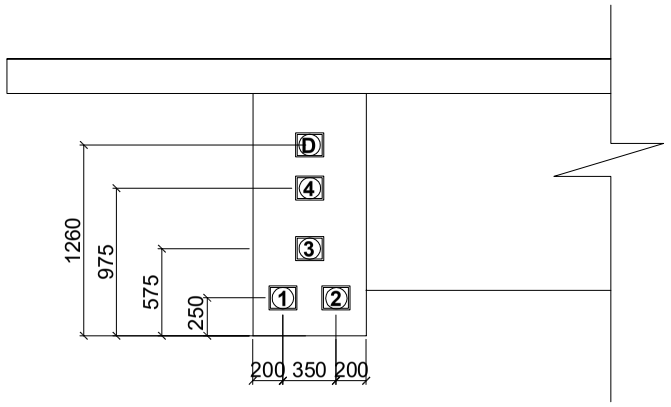

View 1-1
Scale:-1:50

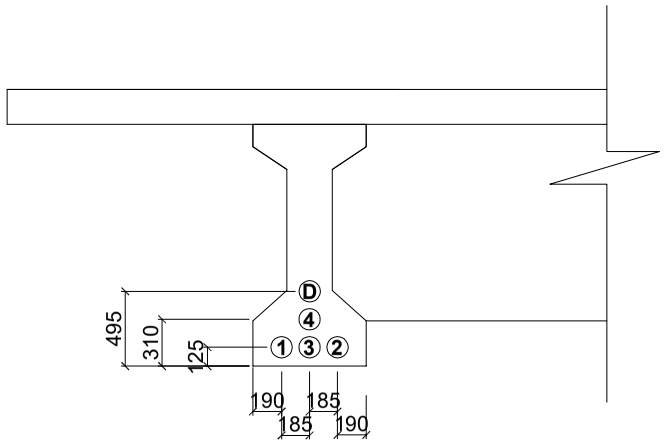

View 2-2
Scale:-1:50

Tendon Layout Data

	Anchor face		Bearing centerline		Intermediate sections						Mid span	
	-600		0		3750		7500		11250		15000	
TENDON	Y	Z	Y	Z	Y	Z	Y	Z	Y	Z	Y	Z
1	250	-175	241	-176	190	-180	154	-183	132	-185	125	-185
2	250	175	241	176	190	180	154	183	132	185	125	185
3	575	0	541	0	359	0	229	0	151	0	125	0
4	975	0	925	0	656	0	464	0	348	0	310	0
5	0	0	0	0	0	0	0	0	0	0	0	0
Dummy	1260	0	1205	0	894	0	673	0	539	0	495	0

Y = Elevation of the tendon center from the girder soffit
Z = Horizontal distance of the tendon center from the centerline of the girder

Tendon Elongation and Emergence Angles

TENDON	Total Jacking Force KN	Total Extension of both sides	Emergence angle degree
1	2600	219	0.922
2	2600	219	0.922
3	2600	218	3.301
4	2600	217	4.874
5	N/A	0	0.000
Dummy			5.601

NOTES ON PRE STRESSING:

1. All the prestressing operation shall commence after 28 days of casting,confirming that the cube specimen has achieved 100% of the prescribed compressive strength(M45) no early prestressing allowed.
2. Each prestressing tendon shall be multistrand cable comprising of 19 strands, each strand of 12.7 mm diameter (19 K 13), 7 ply low relaxation, Class-II High Tensile Steel conforming to IS:14268-2017. Maximum allowed total jacking force = 2733KN
3. Prestressings operation shall be done in 2 stages as follows:

   Stage1

   Precast girder only. After 28days of Casting.

   Tendons to be stressed in stage 1 shall be in the following Sequence:

4	3	-	-	-	-	-	-

   Total jacking force to each tendon in stage 1= 2600KN

   Stage2

   After 14 days of casting of desk slab.

   Tendons to be stressed in stage 2 shall be in the following sequence:

1	2	-	-	-	-	-	-

   Total jacking force to each tendon in stage 2= 2600KN

   Casting of footpath,crash barriers and wearing course will done only after second stage prestressing.
4. Jacking of tendons shall be done from both ends. All the prestress losses(instant and long term) have been already considered in the design.
5. The composite action is considered only for live loads. There shall be no false-work or props to the girder during 2nd stage of prestressing.The formwork for deck slab can be supported on the main precast girders.
6. The cable elongation at their jacking ends,mentioned are based on the assumption that the Modulus of Elasticity of the cable steel is 1.95x10^5 Mpa.The manufacturers specification shallbe followed if provided.
7. The tendon ducts shall be properly secured to the rebars to maintain the profile throughout concreting process.
8. The specified profile and alignments of the tendon shall be strictly maintained.If required,the reinforcement bars can be suitably repositioned or slightly bent to accommodate the tendons as per the engineers instruction.

NOTES ON DUMMY CABLE

The cable marked "D" is for future tensioning or in case of emergency or excessive prestress loss. No tendon shall be provided during construction but the sheating,anchorage block ,brusting reinforcement similar to the other tendons shall be properly installed. The duct shall be left hollow ensuring it is free of debris inside. The anchorage should be capped suitably to keep it free from ingress of foreign material and marked "D" to identify in future

Government of Nepal Ministry of Physical Infrastructure and Transport **Department of Roads** **Project Directorate Office (ADB)** **SASEC Highway Improvement Project-** **Project Preparatory Consultant (SHIP-PPC)** **ADB Loan No: 3722-NEP**	**CONSULTANT:** Soosung Engineering Co. Ltd, Korea in association with ERMC P (Ltd) and TTE-Tech Studio of Engineeering Nepal	**IMPLEMENTING AGENCY:** **DOR, DCID** **ROAD NAME:** **East West Highway (H01)** **Butwal - Gorusinghe Section**	**SHEET TITLE:** Prestressing Details of Main Girder of **Satgadi-2 Bridge** (46/H001/293_A)	**SCALE:** As Shown		**NAME**	**SIGNATURE**	**REV NO.**	**DESCRIPTION**	**DATE:** November , 2022 **DWG.NO.:** 293_Satgadi-2 **SHEET NO.:** 08/25
					Designed by:	Saroj Bhattarai				
					Checked by:	P. Upadhyaya				
					Approved by:	Dr. T.H.Choi				

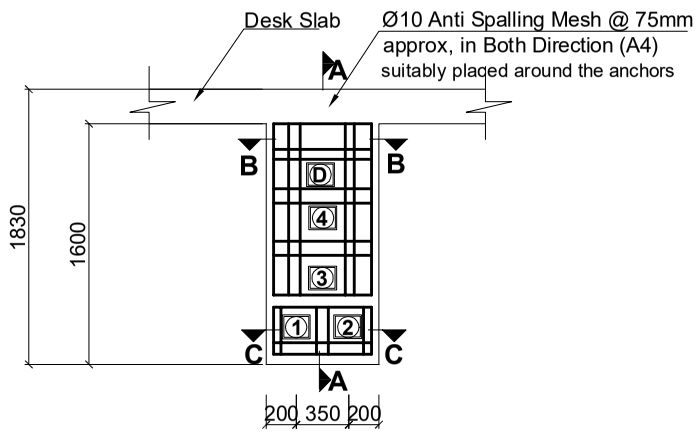

Anti Spalling Reainforcement
Scale:-1:50

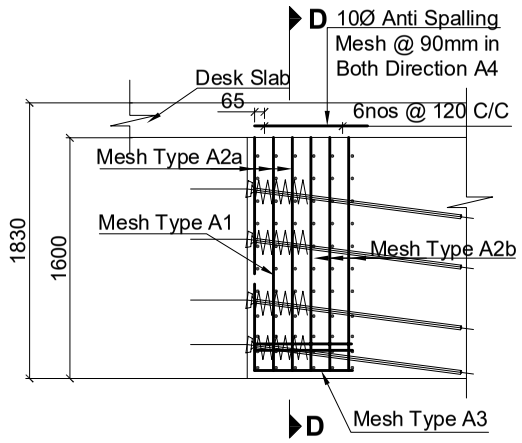

Section At A-A
Scale:-1:50

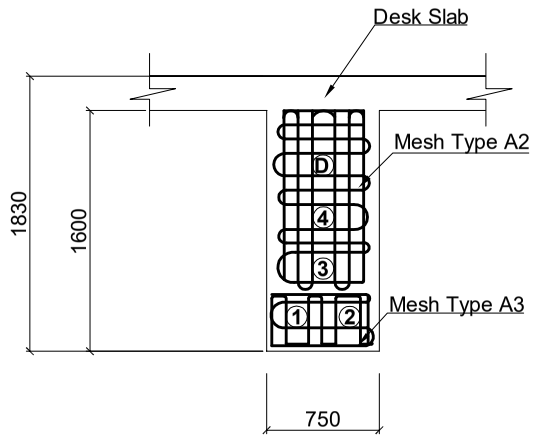

Section At D-D
Scale:-1:50

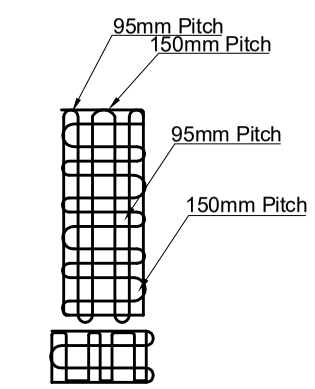

Mesh Type A2a (Near the anchorage)
Scale:-1:50

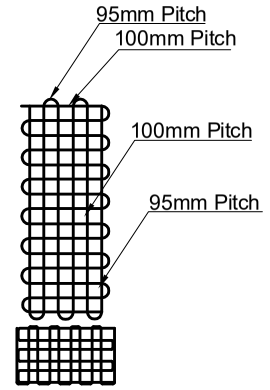

Mesh Type A2b (Away from anchorage)
Scale:-1:50

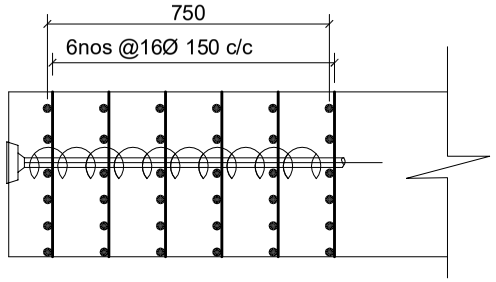

Section At B-B
Scale:-1:20

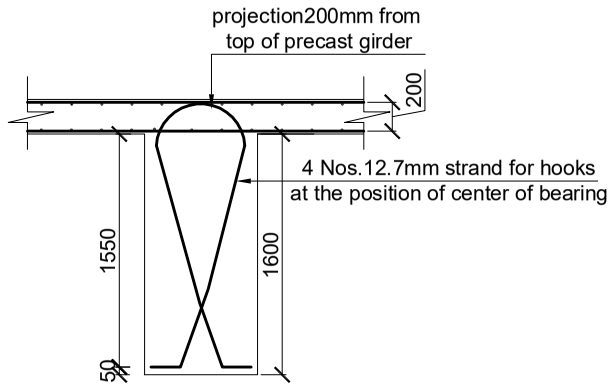

Hook Details At Both Ends Of Grider
Scale:-1:50

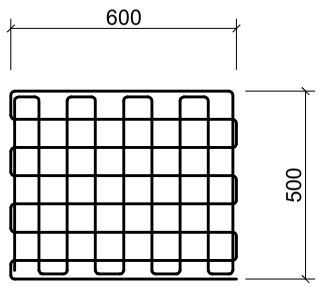

Pitch 75 bothways

Mesh Type A3
Scale:-1:20

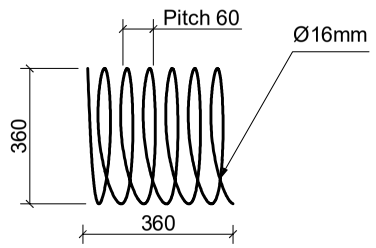

Typical Detail Of Spiral reainforcement A1
Scale:-1:20

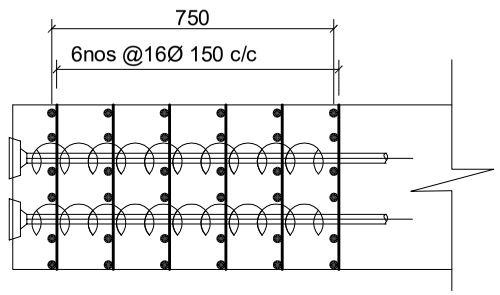

Section At C-C
Scale:-1:20

NOTE:
1. The pitch of the mesh should be adjusted to accommodate the anchors and to maintain the duct profile.
2. The spiral and mesh reinforcement shown is indicative, use the anchorage manufacturer's specification if provided.

Government of Nepal Ministry of Physical Infrastructure and Transport **Department of Roads** **Project Directorate Office (ADB)** **SASEC Highway Improvement Project-** **Project Preparatory Consultant (SHIP-PPC)** **ADB Loan No: 3722-NEP**	**CONSULTANT:**	**IMPLEMENTING AGENCY:**	**SHEET TITLE:**	**SCALE:**		**NAME**	**SIGNATURE**	**REV NO.**	**DESCRIPTION**	**DATE:**
	Soosung Engineering Co. Ltd, Korea in association with ERMC P (Ltd) and TSE-Tech Studio of Engineeering Nepal	**DOR, DCID**	Anchorage Details of **Satgadi-2 Bridge** (46/H001/293_A)	As Shown	Designed by:	Saroj Bhattarai				November , 2022
		ROAD NAME:			Checked by:	P. Upadhyaya				**DWG.NO.:** 293_Satgadi-2
		East West Highway (H01)			Approved by:	Dr. T.H.Choi				**SHEET NO.:** 09/25
		Butwal - Gorusinghe Section								

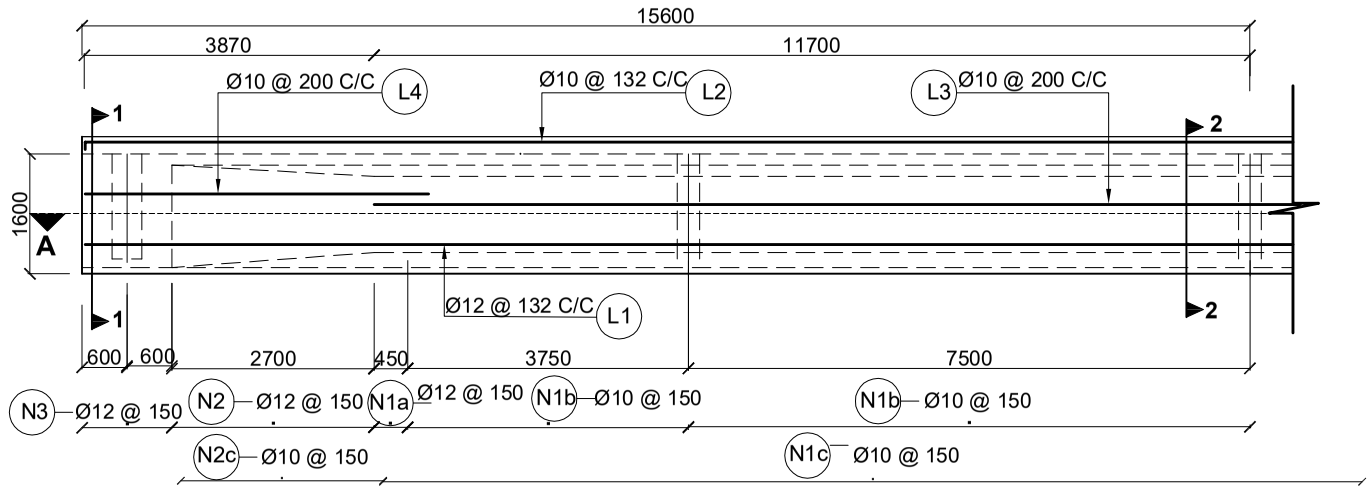

Longitudinal Sectional Elevation
Scale:-1:150

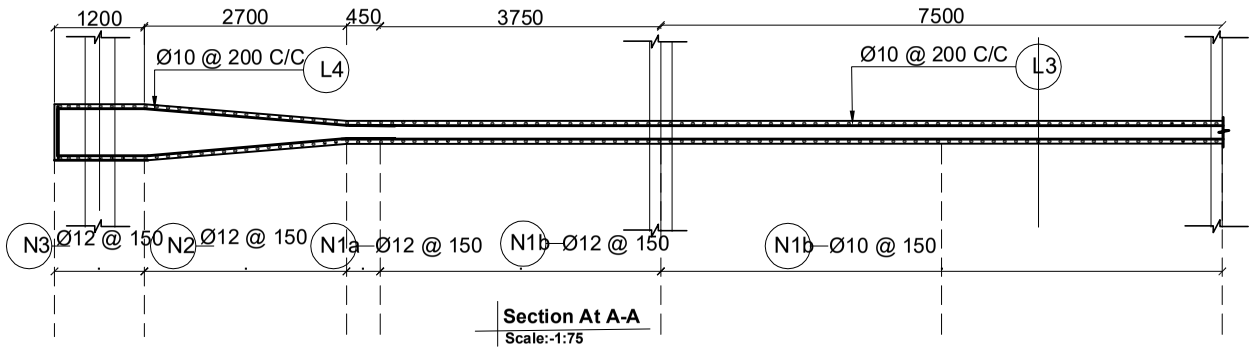

Section At A-A
Scale:-1:75

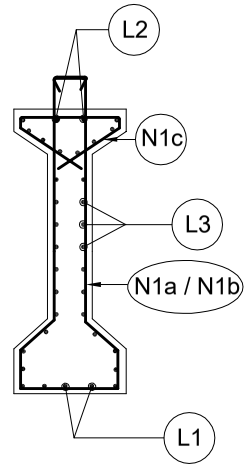

Typical Reinforcement of Precast Girder at Center

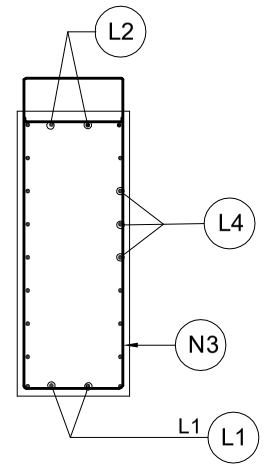

Typical Reinforcement of Precast Girder at End

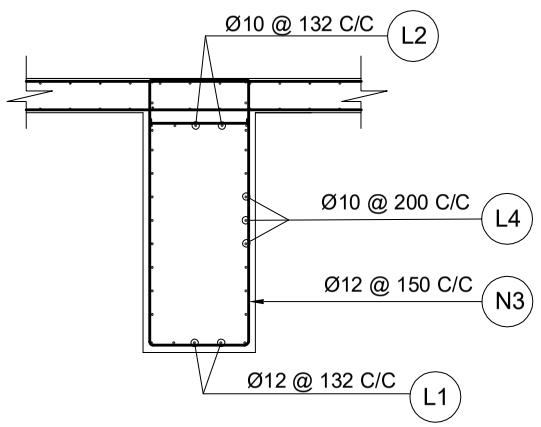

Section At 1-1
Scale:-1:50

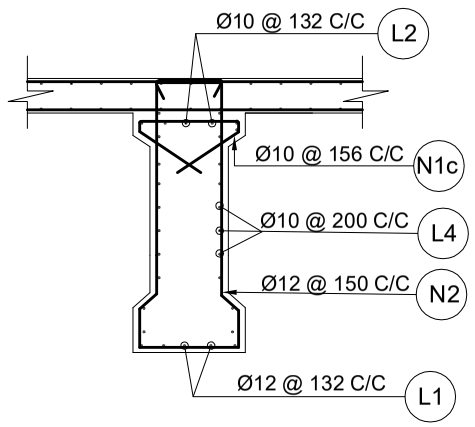

Section At 2-2
Scale:-1:50

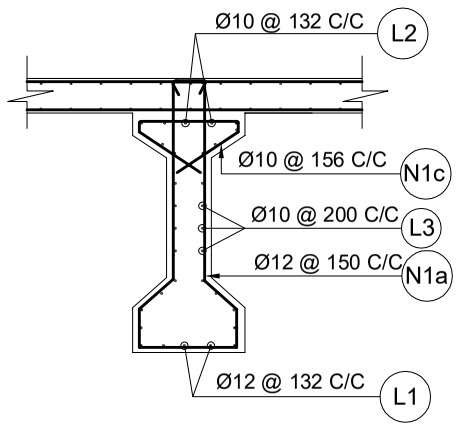

Section At 3-3
Scale:-1:50

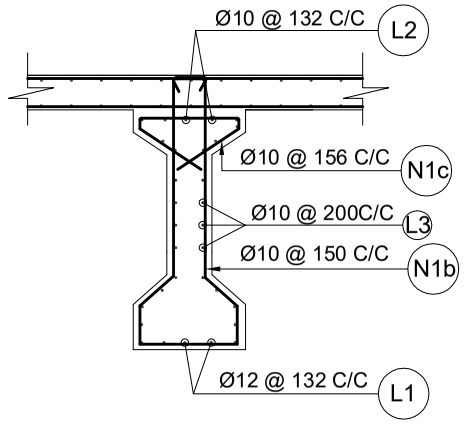

Section At 4-4
Scale:-1:50

NOTES:
The vertical stirrups of the main girder to be tied to the transverse reinforcement of the slab.

Government of Nepal Ministry of Physical Infrastructure and Transport **Department of Roads** **Project Directorate Office (ADB)** **SASEC Highway Improvement Project-** **Project Preparatory Consultant (SHIP-PPC)** **ADB Loan No: 3722-NEP**	**CONSULTANT:** Soosung Engineering Co. Ltd, Korea in association with ERMC P (Ltd) and TS-Tech Studio of Engineeering Nepal	**IMPLEMENTING AGENCY:** **DOR, DCID** **ROAD NAME:** **East West Highway (H01)** **Butwal - Gorusinghe Section**	**SHEET TITLE:** Untensioned Reinforcement Details of Girder of **Satgadi-2 Bridge** (46/H001/293_A)	**SCALE:** As Shown		**NAME**	**SIGNATURE**	**REV NO.**	**DESCRIPTION**	**DATE:** November , 2022
					Designed by:	Saroj Bhattarai				**DWG.NO.:** 293_Satgadi-2
					Checked by:	P. Upadhyaya				
					Approved by:	Dr. T.H.Choi				**SHEET NO.:** 10/25

BAR BENDING SCHEDULE OF MAIN GIRDER

BAR ID	SHAPE OF BAR IN mm (NOT TO SCALE)	SPACING (MM)	Ø OF BARS (mm)	NO. OF BARS	LENGTH (m)	WEIGHT/LENGTH (kG/m)	TOTAL WEIGHT (kG)
N1a	208, 2*75 HOOK, 1290	VARIES	12	56	4.910	0.888	244.114
N1b	300, 658, 15, 255, Mid Span	VARIES	10	100	4.910	0.617	302.721
	658, 70, 490	SPACING AS PER N1	10	156	1.780	0.617	171.201
N2	varies 208 to 658, 2*75 HOOK, varies from 0 to 300, varies from 1390 to 1590, 658, 15, 255, Tapered Section	150	12	36	5.260	0.888	168.117
N2c	658, 70, 245	150	10	36	1.290	0.617	28.632
N3	2x75, 1838, End Zone, 658	150	12	16	4.940	0.888	70.173
		150	10	16	0.778	0.617	7.675
L1	31120, Hor. Bar at Bottom	132	12	6	31.120	0.888	165.773
L2	31120, 100, Hor. Bar at top of Precast Girder	132	10	6	31.320	0.617	115.860
L3	23400, Hor. Bar at Side End Zone	200	10	20	23.400	0.617	288.540
L4	1160, 2710, 600, 650, Hor. Bar at Side (End Zone)	200	10	40	5.120	0.617	126.267
A1	PITCH=60 max, 360	VARIES	16	10	7.930	1.578	125.162
		(Use Manufacturer's specifications if available)					
A2	500, PITCH=115 approx*	150	16	12	17.580	1.578	332.967
		(Use Manufacturer's specifications if available) The Sketch shown here is indicative, for he purpose of estimate only. The pitch of the bars to be adjusted as per the tendon's size and positions					

BAR BENDING SCHEDULE OF MAIN GIRDER

BAR ID	SHAPE OF BAR IN mm (NOT TO SCALE)	SPACING (MM)	Ø OF BARS (mm)	NO. OF BARS	LENGTH (m)	WEIGHT/LENGTH (kG/m)	TOTAL WEIGHT (kG)
A3	PITCH=75 both way, 600, 500, Over Bearing, Layers =2	VARIES	10	4	10.200	0.617	25.155
TOTAL IN ONE GIRDER							2172.356
TOTAL IN ONE GIRDER (IN METRIC TON)							2.172

BAR BENDING SCHEDULE OF DECK SLAB

BAR ID	SHAPE OF BAR IN mm (NOT TO SCALE)	SPACING (MM)	Ø OF BARS (mm)	NO. OF BARS	LENGTH (m)	WEIGHT/LENGTH (kG/m)	TOTAL WEIGHT (kG)
S1	16370, 100	150	12	214	16.570	0.888	3148.178
S2	16370, 100	150	12	209	16.570	0.888	3074.623
S2a	100, 2445, Additional Bars At left Cantilever	150	12	209	2.550	0.888	473.162
S2b	2445, 100, Additional Bars At Right Cantilever	150	12	209	2.550	0.888	473.162
S3	31110, 155	MID DECK 200	10	83	31.420	0.617	1607.847
		LEFT CANT. 200	10	6	31.420	0.617	116.230
		RIGHT CANT. 200	10	6	31.420	0.617	116.230
S4	31110, 155	200	10	83	31.420	0.617	1607.847
S4a	155, 4200, Additional Top Bars At Deck End,Left	200	12	83	4.355	0.888	320.914
S4b	4200, 155, Additional Top Bars At Deck End,right	200	12	83	4.355	0.888	320.914
S5a	100, 410, 200, For extended Deck,Left End	200	10	74	0.710	0.617	32.393
S5b	100, 410, 200, For extended Deck,Right End	200	10	74	0.710	0.617	32.393
TOTAL EXCLUDING FOOTPATHS KG							11323.894
TOTAL WEIGHT IN METRIC TON							11.324

BAR BENDING SCHEDULE OF **RAISED FOOTPATH**

BAR ID	SHAPE OF BAR IN mm (NOT TO SCALE)	SPACING (MM)	Ø OF BARS (mm)	NO. OF BARS	LENGTH (m)	WEIGHT/LENGTH (kG/m)	TOTAL WEIGHT (kG)
FP1	2320, 2*100, 400	150	12	209	5.640	0.888	1046.522
FP2	31110	150	10	21	31.110	0.617	402.791
ONE SIDE							1449.313
TOTAL WEIGHT IN METRIC TON							1.449

BAR BENDING SCHEDULE OF INTERMEDIATE CROSS GIRDER

BAR ID	SHAPE OF BAR IN mm (NOT TO SCALE)	SPACING (MM)	Ø OF BARS (mm)	NO. OF BARS	LENGTH (m)	WEIGHT/LENGTH (kG/m)	TOTAL WEIGHT (kG)
MC1	400, 400, 14395	50	25	4	15.195	3.853	234.208
MC2	14395, 400, 400	200	20	2	15.195	2.466	74.946
MC3	2*75, 1440, 210, 2 Legged @200MM C/C	200	10	69	3.420	0.617	145.491
MC4	13970, 2X6 nos. each face	300	10	12	13.970	0.617	103.357
TOTAL IN ONE GIRDER 3.							558.002
TOTAL NUMBER OF GIRDERS AND TOTAL WEIGHT (IN METRIC TON) 3							1.674

BAR BENDING SCHEDULE OF END CROSS GIRDER

	BAR ID	SHAPE OF BAR IN mm (NOT TO SCALE)	SPACING (MM)	Ø OF BARS (mm)	NO. OF BARS	LENGTH (m)	WEIGHT/LENGTH (kG/m)	TOTAL WEIGHT (kG)
	EC1	400, 400, 14395	75	25	4	15.195	3.853	234.208
	EC2	14395, 400, 400	150	25	6	15.195	3.853	351.312
	EC3	2*75, 1438, 308, 2 Legged @200MM C/C	200	12	73	3.642	0.888	236.040
	EC4	14070, 2X6 nos. each face	300	10	10	14.070	0.617	86.747
	TOTAL IN ONE GIRDER							908.307
	TOTAL IN ONE GIRDER (IN METRIC TON)							0.908

Government of Nepal Ministry of Physical Infrastructure and Transport **Department of Roads** **Project Directorate Office (ADB)** **SASEC Highway Improvement Project-** **Project Preparatory Consultant (SHIP-PPC)** **ADB Loan No: 3722-NEP**	**CONSULTANT:** Soosung Engineering Co. Ltd, Korea in association with ERMC P (Ltd) and FIC-Tech Studio of Engineeering Nepal	**IMPLEMENTING AGENCY:** **DOR, DCID** **ROAD NAME:** **East West Highway (H01)** **Butwal - Gorusinghe Section**	**SHEET TITLE:** B.B.S of Slab & Main Girder of **Satgadi-2 Bridge** (46/H001/293_A)	**SCALE:** As Shown		**NAME**	**SIGNATURE**	**REV NO.**	**DESCRIPTION**
					Designed by:	Saroj Bhattarai			
					Checked by:	P. Upadhyaya			
					Approved by:	Dr. T.H.Choi			

DATE: November , 2022
DWG.NO.: 293_Satgadi-2
SHEET NO.: 11/25

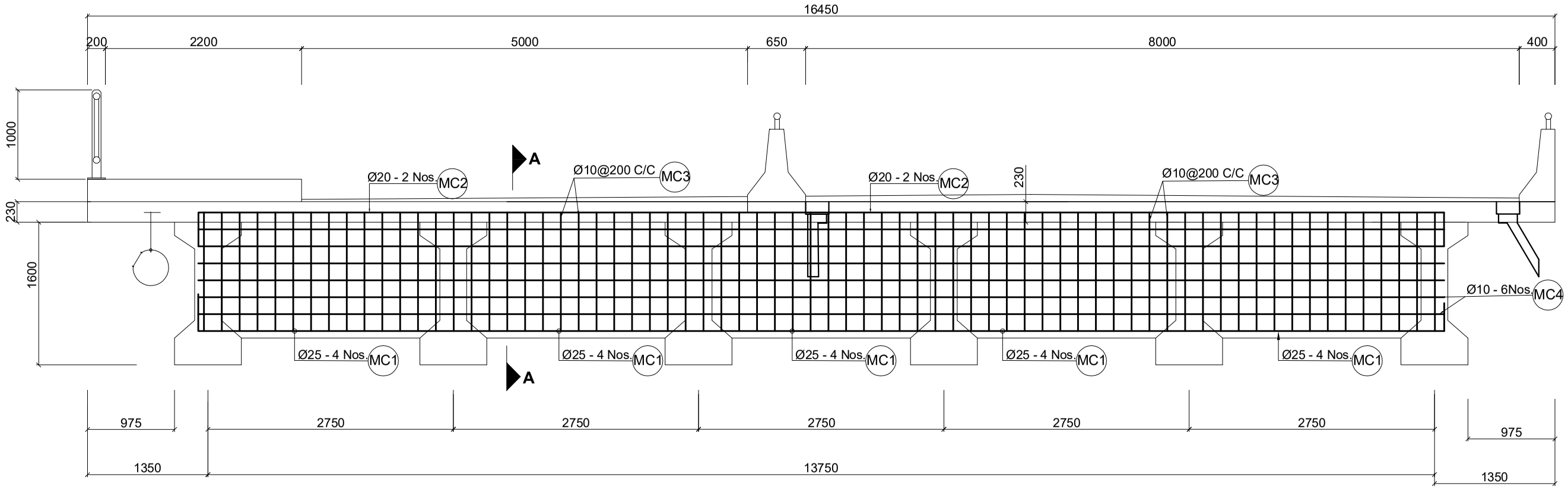

Intermediate Cross Girders
Scale:-1:50

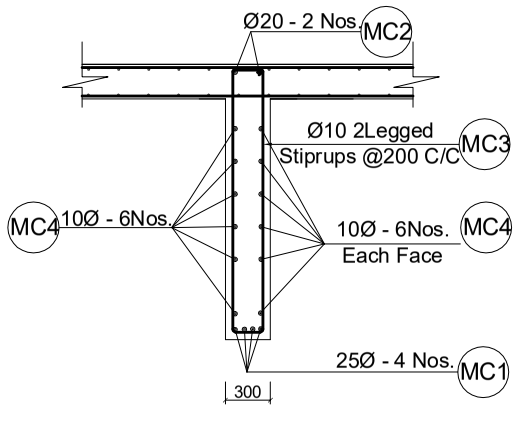

Section At A-A
Scale:-1:50

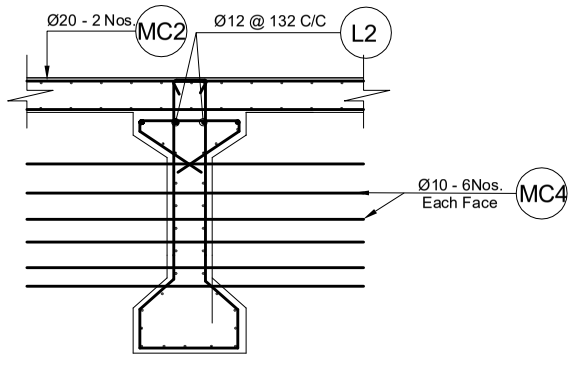

Dowel bar of Intermediate Cross Girder
Scale:-1:50

NOTES:
Dowel bars similar to the longitudinal bars of the cross girders shall be pre-installed in the precast main girder before casting. The longitudinal bars of the cross girder shall be lapped to the dowel bars, which shall have a lap length of 60 dia. of the corresponding bars.

Government of Nepal Ministry of Physical Infrastructure and Transport **Department of Roads** **Project Directorate Office (ADB)** **SASEC Highway Improvement Project-** **Project Preparatory Consultant (SHIP-PPC)** **ADB Loan No: 3722-NEP**	**CONSULTANT:** Soosung Engineering Co. Ltd, Korea in association with ERMC P (Ltd) and TSE-Tech Studio of Engineeering Nepal	**IMPLEMENTING AGENCY:** **DOR, DCID** **ROAD NAME:** **East West Highway (H01)** **Butwal - Gorusinghe Section**	**SHEET TITLE:** Reinforcement Details of Intermediate Cross Girder of **Satgadi-2 Bridge** (46/H001/293_A)	**SCALE:** As Shown		**NAME**	**SIGNATURE**	**REV NO.**	**DESCRIPTION**	**DATE:** November , 2022 **DWG.NO.:** 293_Satgadi-2 **SHEET NO.:** 12/25
					Designed by:	Saroj Bhattarai				
					Checked by:	P. Upadhyaya				
					Approved by:	Dr. T.H.Choi				

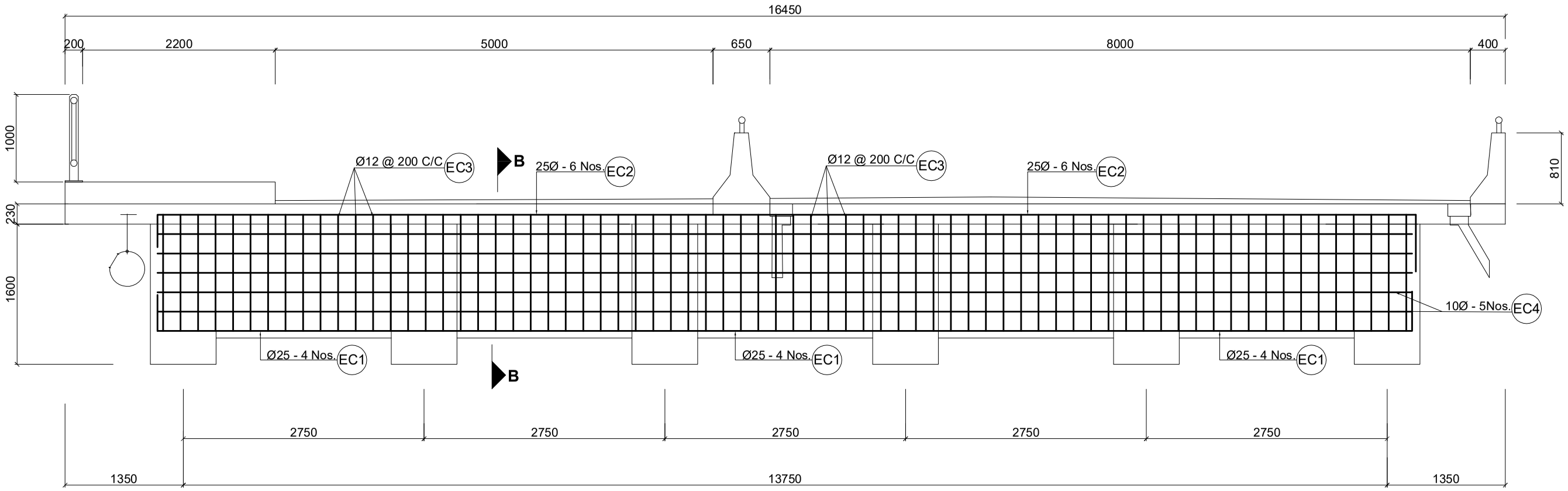

End Cross Girders
Scale:-1:50

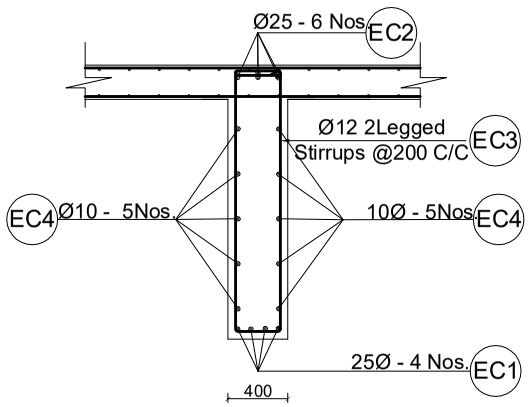

Section At B-B
Scale:-1:50

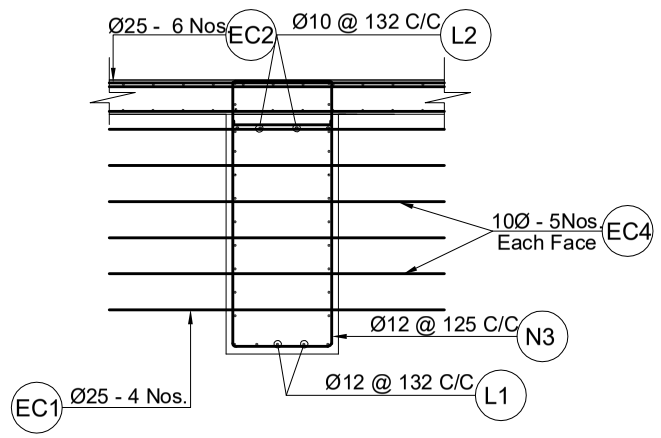

Dowel bar of End Cross Girder
Scale:-1:50

NOTES:
Dowel bars similar to the longitudinal bars of the cross girders shall be pre-installed in the precast main girder before casting. The longitudinal bars of the cross girder shall be lapped to the dowel bars, which shall have a lap length of 60 dia. of the corresponding bars.

Government of Nepal Ministry of Physical Infrastructure and Transport **Department of Roads** **Project Directorate Office (ADB)** **SASEC Highway Improvement Project-** **Project Preparatory Consultant (SHIP-PPC)** **ADB Loan No: 3722-NEP**	**CONSULTANT:** Soosung Engineering Co. Ltd, Korea in association with ERMC P (Ltd) and FSC-Tech Studio of Engineeering Nepal	**IMPLEMENTING AGENCY:** **DOR, DCID** **ROAD NAME:** **East West Highway (H01)** **Butwal - Gorusinghe Section**	**SHEET TITLE:** Reinforcement Details Of Cross Girder of Satgadi-2 Bridge (04/H001/005_A)	**SCALE:** As Shown		**NAME**	**SIGNATURE**	**REV NO.**	**DESCRIPTION**	**DATE:** November , 2022 **DWG.NO.:** 293_Satgadi-2 **SHEET NO.:** 13/25
					Designed by:	Saroj Bhattarai				
					Checked by:	P. Upadhyaya				
					Approved by:	Dr. T.H.Choi				

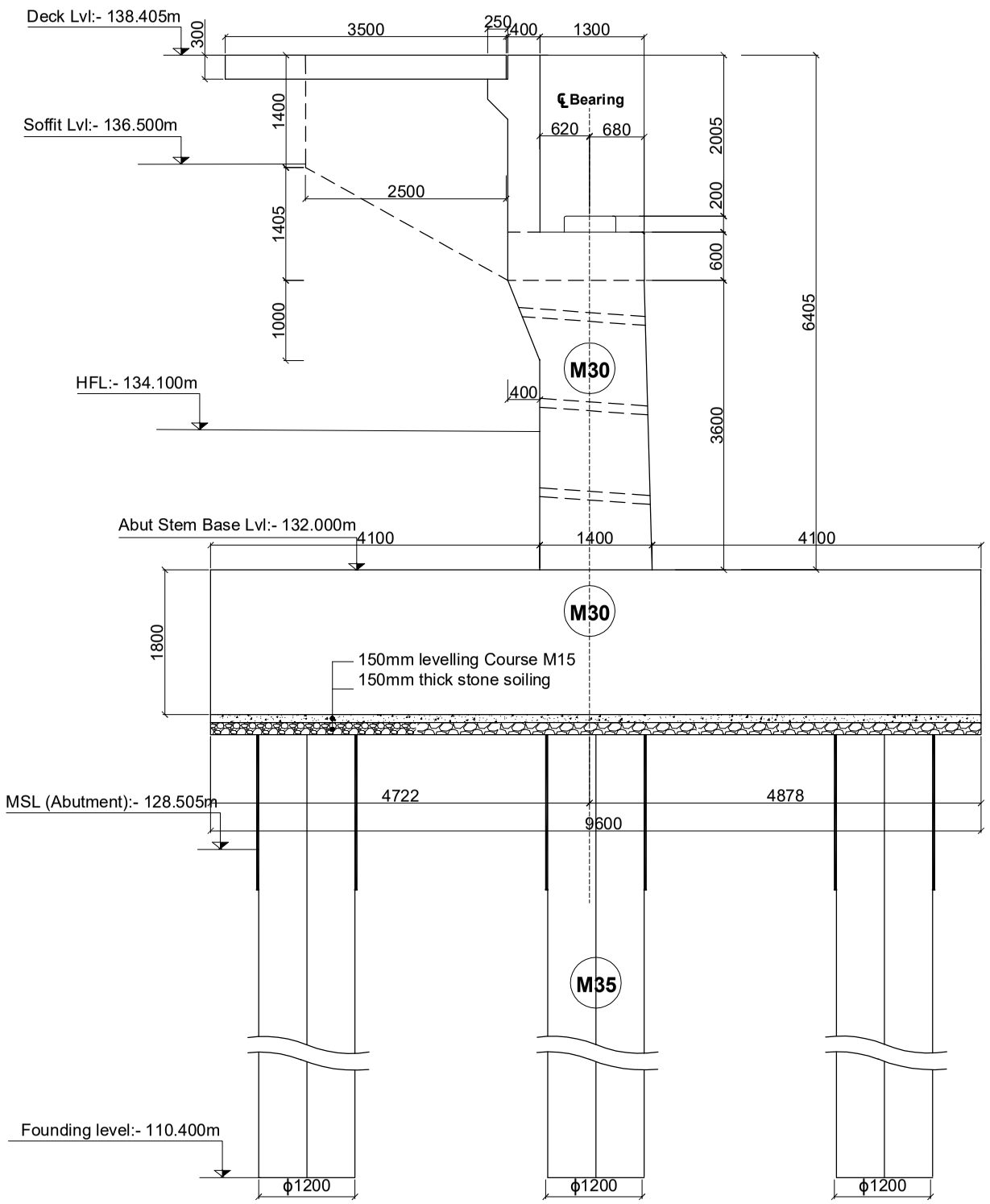

Section of Abutment At (A-A)
Scale:-1:75

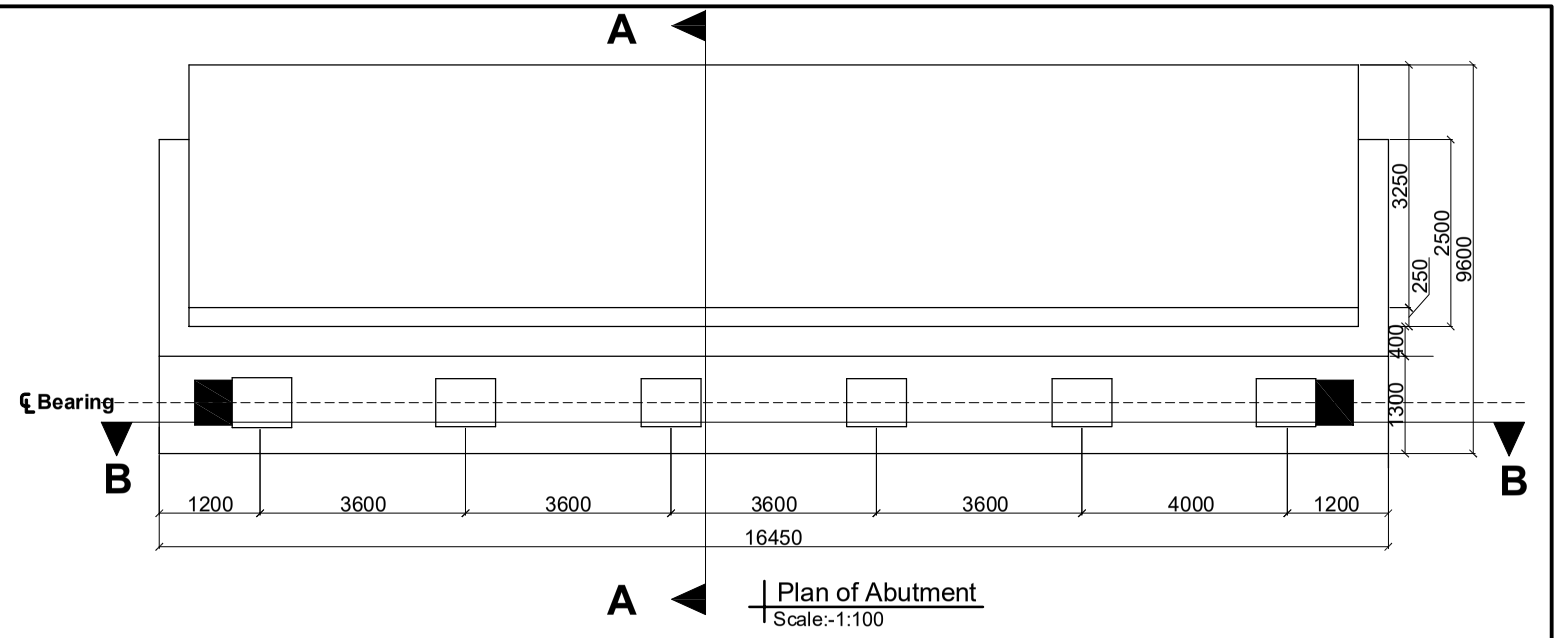

Plan of Abutment
Scale:-1:100

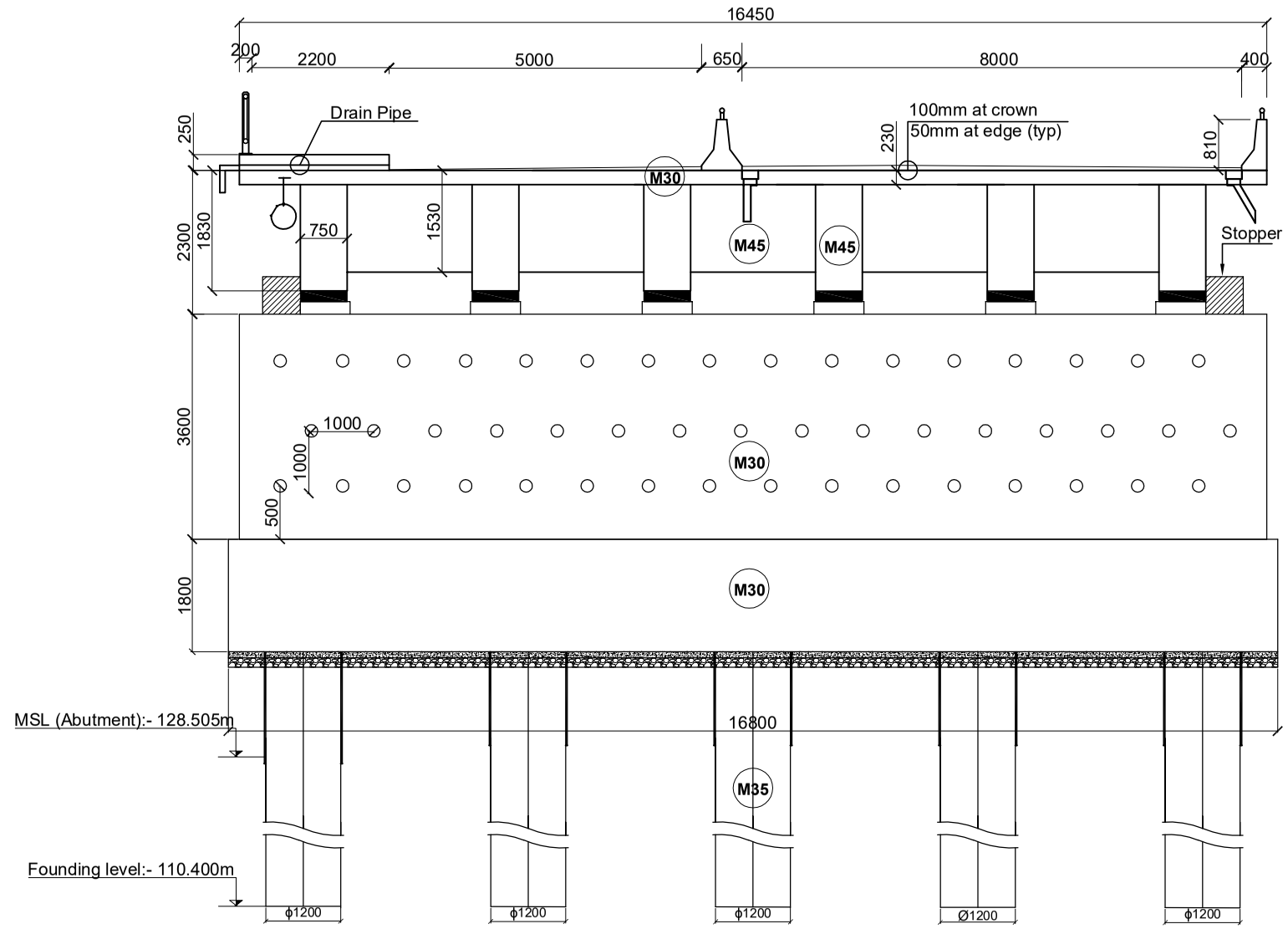

Section Of Abutment At (B-B)
Scale:-1:100

Government of Nepal Ministry of Physical Infrastructure and Transport **Department of Roads** **Project Directorate Office (ADB)** **SASEC Highway Improvement Project-** **Project Preparatory Consultant (SHIP-PPC)** **ADB Loan No: 3722-NEP**	**CONSULTANT:** Soosung Engineering Co. Ltd, Korea in association with ERMC P (Ltd) and FSC-Tech Studio of Engineeering Nepal	**IMPLEMENTING AGENCY:** **DOR, DCID** **ROAD NAME:** **East West Highway (H01)** **Butwal - Gorusinghe Section**	**SHEET TITLE:** Detail of Abutment of **Satgadi-2 Bridge** (46/H001/293_A)	**SCALE:** As Shown		**NAME**	**SIGNATURE**	**REV NO.**	**DESCRIPTION**
					Designed by:	Saroj Bhattarai			
					Checked by:	P. Upadhyaya			
					Approved by:	Dr. T.H.Choi			

DATE: November , 2022
DWG.NO.: 293_Satgadi-2
SHEET NO.: 14/25

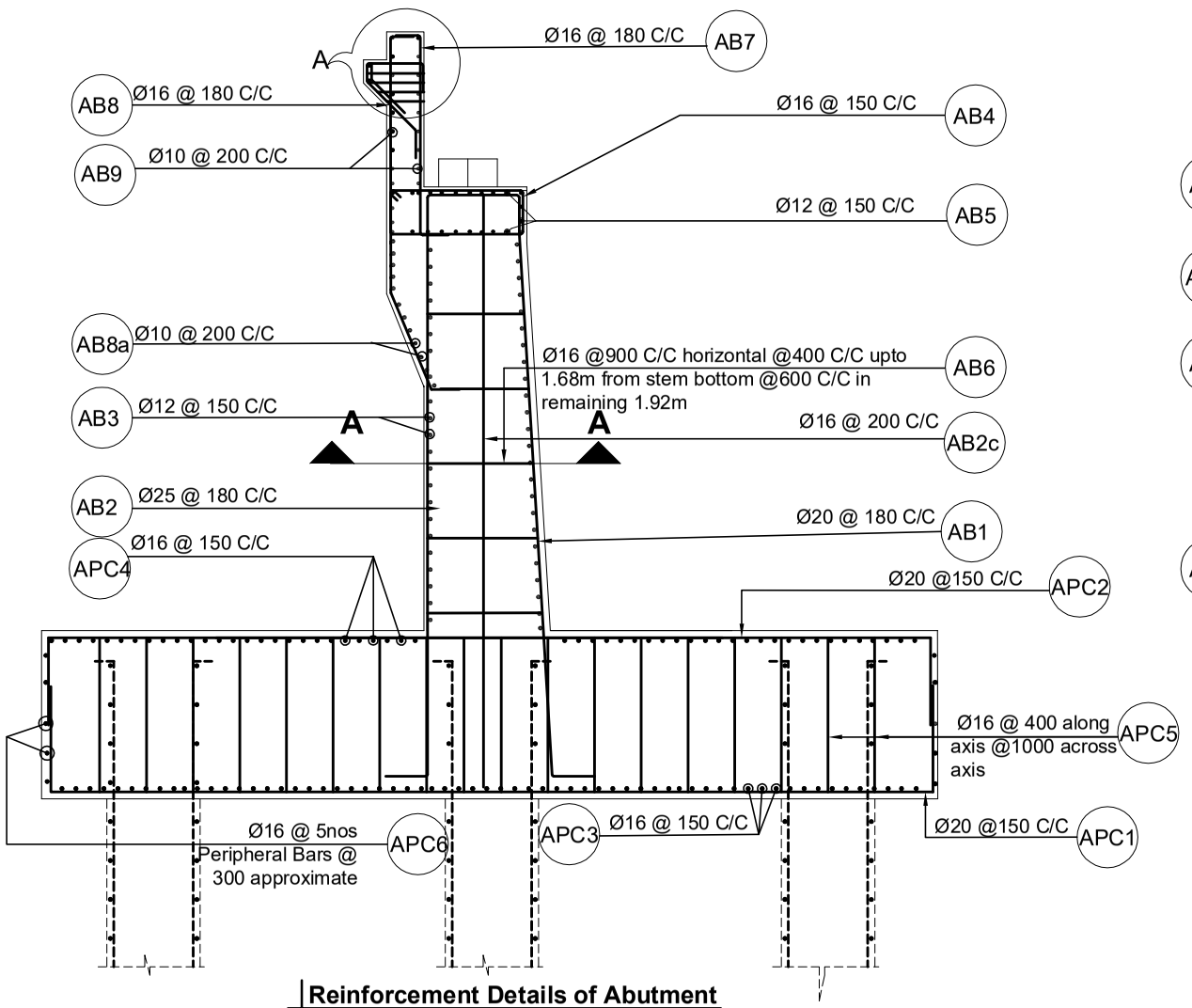

Reinforcement Details of Abutment
Scale:-1:75

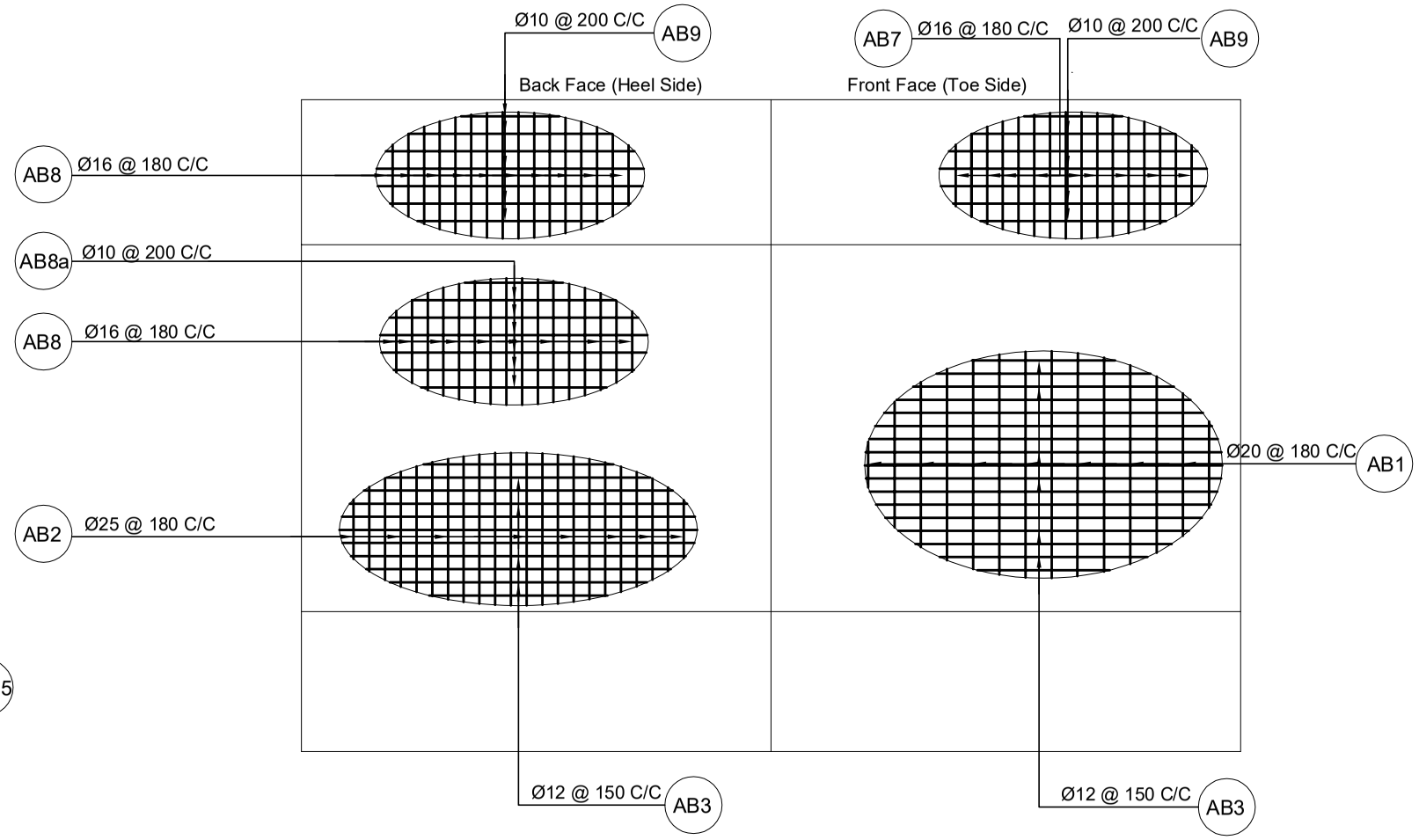

Reinforcement Details of Abutment
Scale:-1:75

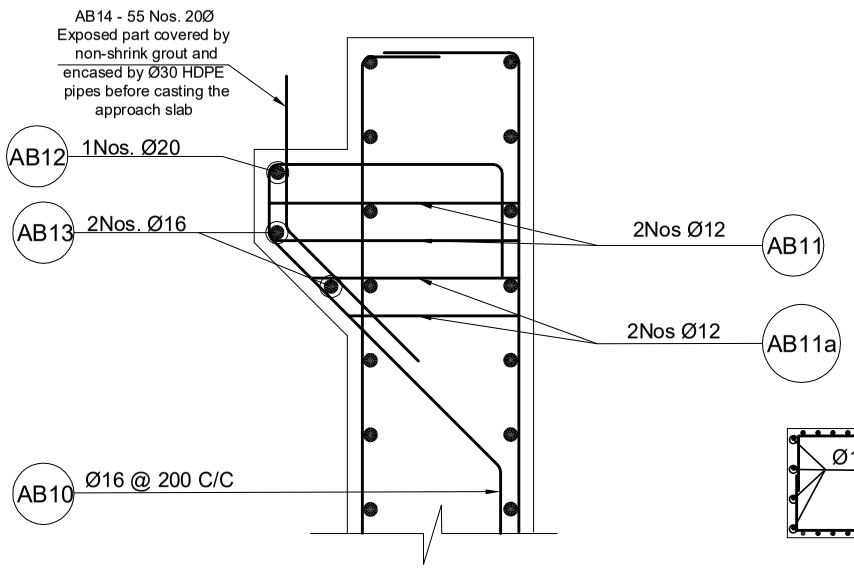

Detail At A
Scale:-1:20

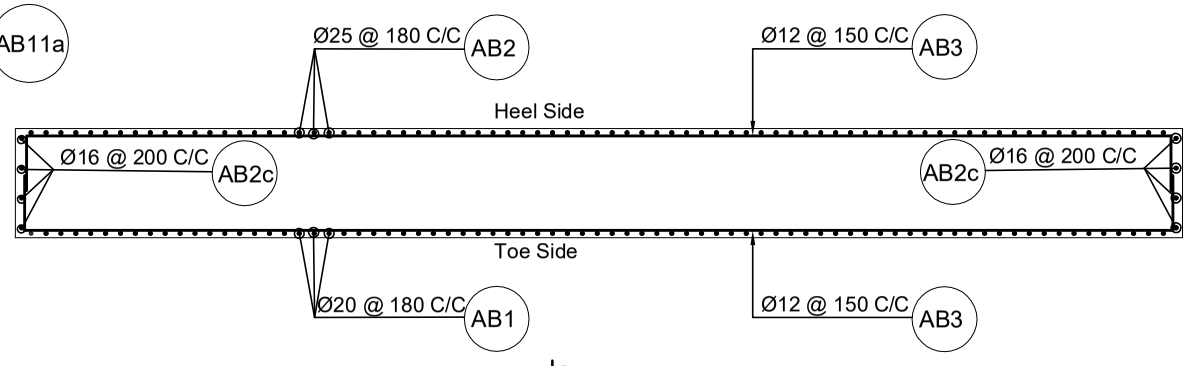

Section at A-A
Scale:-1:75

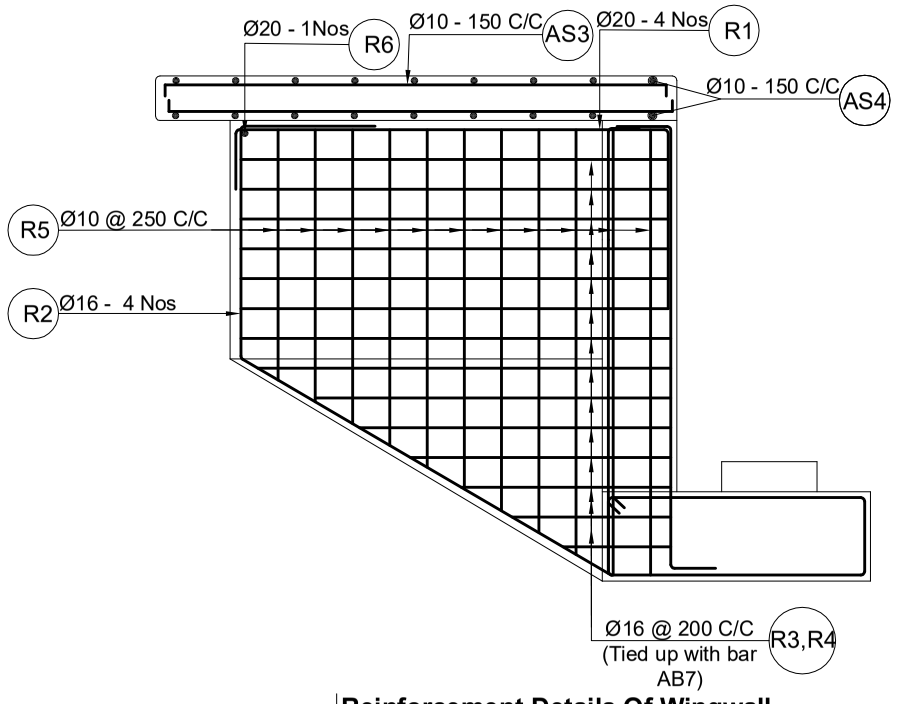

Reinforcement Details Of Wingwall
Scale:-1:50

Government of Nepal Ministry of Physical Infrastructure and Transport **Department of Roads** **Project Directorate Office (ADB)** **SASEC Highway Improvement Project-** **Project Preparatory Consultant (SHIP-PPC)** **ADB Loan No: 3722-NEP**	**CONSULTANT:** Soosung Engineering Co. Ltd, Korea in association with ERMC P (Ltd) and TSE-Tech Studio of Engineeering Nepal	**IMPLEMENTING AGENCY:** **DOR, DCID** **ROAD NAME:** **East West Highway (H01)** **Butwal - Gorusinghe Section**	**SHEET TITLE:** Reinforcement Details of Abutment of **Satgadi-2 Bridge** (46/H001/293_A)	**SCALE:** As Shown		**NAME**	**SIGNATURE**	**REV NO.**	**DESCRIPTION**	**DATE:** November , 2022 **DWG.NO.:** 293_Satgadi-2 **SHEET NO.:** 15/25
					Designed by:	Saroj Bhattarai				
					Checked by:	P. Upadhyaya				
					Approved by:	Dr. T.H.Choi				

BAR BENDING SCHEDULE OF ABUTMENT

BAR ID	SHAPE OF BAR IN mm (NOT TO SCALE)	SPACING (mm)	Ø OF BARS (mm)	NO. OF BARS	LENGTH (m)	WEIGHT/LENGTH (Kg/m)	TOTAL WEIGHT (Kg)
AB1	300; 5790; 500	180 mm c/c Approx	20	92	6.590	2.466	1495.181
AB1a	0; 0	-	-	-	-	-	-
AB2	500; 5790; 500	180 mm c/c Approx	25	92	6.790	3.853	2407.122
AB2c	5790; 500	At sideface 200 mm c/c	16	16	6.290	1.578	158.844
AB3	avg.900; 16290	150 mm c/c Approx	12	50	34.380	0.888	1526.156
AB4	avg.1535; 515; 2*100	150 mm c/c Approx	16	111	4.300	1.578	753.342
AB5	16300	150 mm c/c Approx	12	28	16.300	0.888	405.199
AB6	1235-1135; Hook Length 160; 900 mm C/C horizontal; 400 mm C/Cvertical upto 1.68m from stem; bottom 600 mm C/C vertical at remaining 1.92 m		16	172	1.633	1.578	443.318
AB7	250; 2805; 300	180 mm c/c Approx	16	92	3.355	1.578	487.170
AB8	250; 2730; 1071; 300	180 mm c/c Approx	16	92	4.357	1.578	632.668
AB8a	16300	200 mm c/c Approx	10	7	16.300	0.617	70.347
AB9	16290; 268	200 mm c/c Approx	10	12	33.116	0.617	245.008
AB10	100; 500; 300; 647; 200	200 mm c/c Approx	16	79	1.747	1.578	217.831
AB11	500; 200		12	158	0.900	0.888	126.247
AB11a	250 Average; 200		12	158	0.650	0.888	91.179
AB12	16300		20	1	16.300	2.466	40.198

BAR BENDING SCHEDULE OF ABUTMENT

BAR ID	SHAPE OF BAR IN mm (NOT TO SCALE)	SPACING (mm)	Ø OF BARS (mm)	NO. OF BARS	LENGTH (m)	WEIGHT/LENGTH (Kg/m)	TOTAL WEIGHT (Kg)
AB13	16300		16	2	16.300	1.578	51.454
AB14	400; 500		20	55	0.900	2.466	122.075
TOTAL WEIGHT ABUTMENT KG							9273.340
TOTAL WEIGHT (IN METRIC TON)							9.273

BAR BENDING SCHEDULE FOR ABUTMENT PILECAP

BAR ID	SHAPE OF BAR IN mm (NOT TO SCALE)	SPACING (mm)	Ø OF BARS (mm)	NO. OF BARS	LENGTH (m)	WEIGHT/LENGTH (Kg/m)	TOTAL WEIGHT (Kg)
APC1	9430; 1080	150	20	112	11.590	2.466	3201.268
APC2	9430; 1080	150	20	112	11.590	2.466	3201.268
APC3	16634; 1080	150	16	64	18.794	1.578	1898.452
APC4	16634; 1080	150	16	64	18.794	1.578	1898.452
APC5	1570; Curve length = 251; Curve radius = 40; Hook length = 80	0	16	473	2.232	1.578	1666.310
		500 C/C along/1000Across Axis					
APC6	9450; 16650	300	16	5	52.200	1.578	411.947
TOTAL IN PILE OF ONE ABUTMENT							12277.697
TOTAL WEIGHT (IN METRIC TON)							12.278

BAR BENDING SCHEDULE FOR WINGWALL

BAR ID	SHAPE OF BAR IN mm (NOT TO SCALE)	SPACING (mm)	Ø OF BARS (mm)	NO. OF BARS	LENGTH (m)	WEIGHT/LENGTH (Kg/m)	TOTAL WEIGHT (Kg)
R1	400; 2807; 1200	0	20	8	4.407	2.466	86.947
R2	1307; 300; 2870	0	16	8	4.477	1.578	56.530
R3	214; 2714; 2*150	200	16	14	6.156	1.578	136.028
R4	214; avg.1350; 2*150	200	16	16	3.428	1.578	86.569
R5	182; avg.2103	250	10	22	4.870	0.617	66.056
R6	307	0	20	2	0.307	2.466	1.514
R7	2800	0	10	4	2.800	0.617	6.905
R8	350; 260	0	10	15	1.320	0.617	12.207
TOTAL IN 2 WINGWALL IN ONE ABUTMENT							452.756
TOTAL WEIGHT (IN METRIC TON)							0.453

Government of Nepal
Ministry of Physical Infrastructure and Transport
Department of Roads
Project Directorate Office (ADB)
SASEC Highway Improvement Project-
Project Preparatory Consultant (SHIP-PPC)
ADB Loan No: 3722-NEP

CONSULTANT:
Soosung Engineering Co. Ltd,
Korea
in association with
ERMC P (Ltd)
and
FTC-Tech Studio of Engineeering
Nepal

IMPLEMENTING AGENCY:
DOR, DCID

ROAD NAME:
East West Highway (H01)
Butwal - Gorusinghe Section

SHEET TITLE:
Bar Bending Schedule Abutment
of
Satgadi-2 Bridge
(46/H001/293_A)

SCALE:
As Shown

	NAME	SIGNATURE	REV NO.	DESCRIPTION
Designed by:	Saroj Bhattarai			
Checked by:	P. Upadhyaya			
Approved by:	Dr. T.H.Choi			

DATE: November , 2022
DWG.NO.: 293_Satgadi-2
SHEET NO.: 16/25

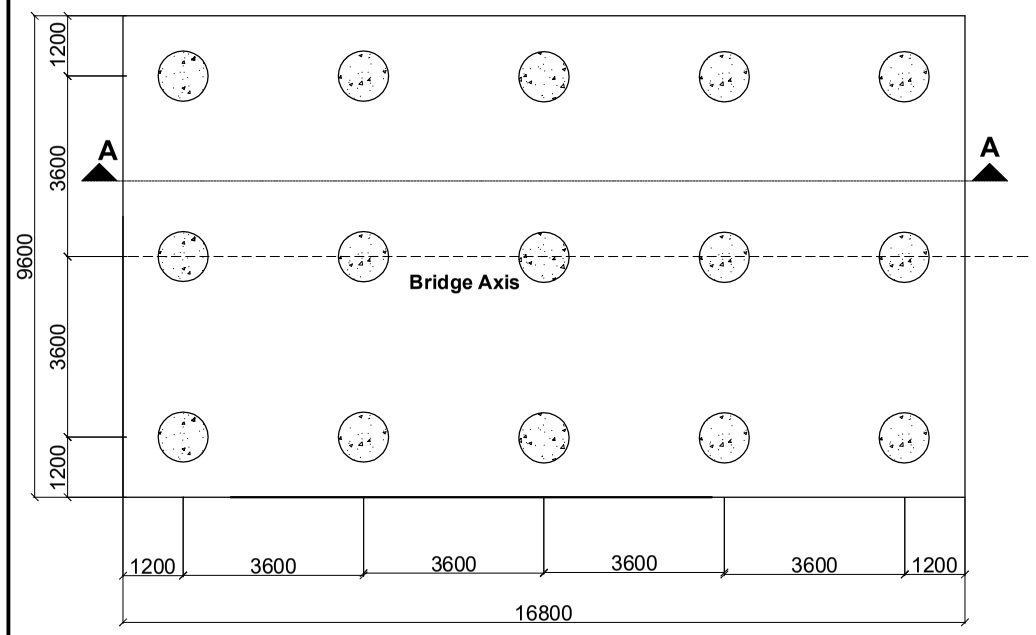

Plan of Abutment Piles
Scale:-1:150

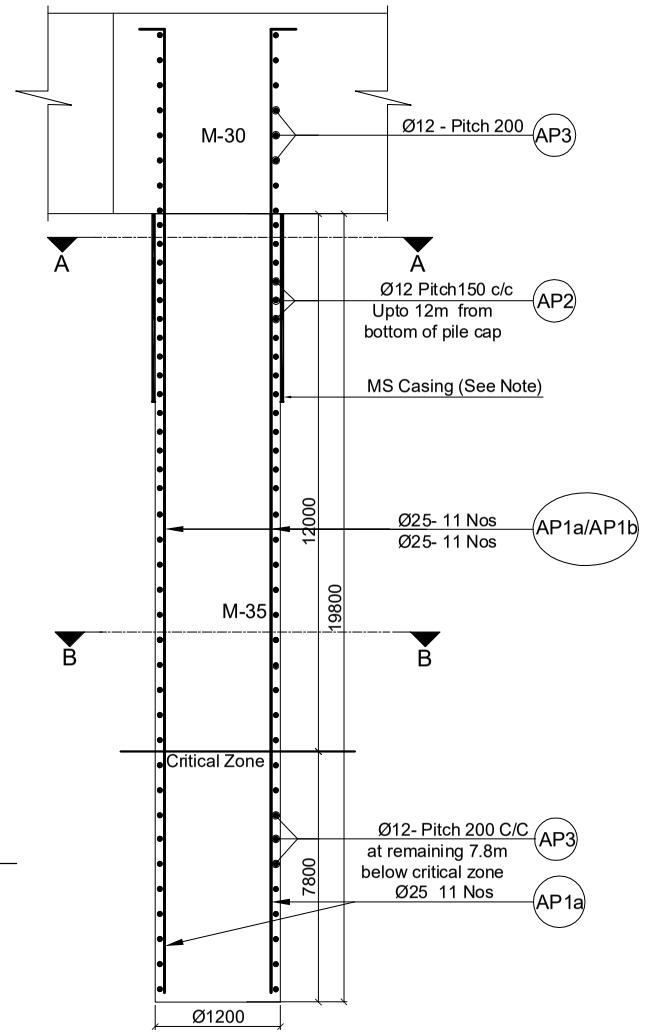

Reinforcement Details of Pile
Scale:-1:50

BAR BENDING SCHEDULE FOR ABUTMENT PILES

BAR ID	SHAPE OF BAR IN mm (NOT TO SCALE)	SPACING (mm)	Ø OF BARS (mm)	NO. OF BARS	LENGTH (m)	WEIGHT/LENGTH (Kg/m)	TOTAL WEIGHT (Kg)
AP1a	200 Full Length Bars 21405		25	11 Each Pile	21.610	3.853	915.984
AP1b	200 Curtailed bars 13700		25	11 Each Pile	13.900	3.853	589.180
AP2	Dia-1038,Pitch-150 12m From Bottom of pile cap	150	12	1 Each Pile	263.590	0.888	234.019
AP3	Dia-1038,Pitch-200 inside pile cap 200 Below Critical Zone	200	12	1 Each Pile	157.750	0.888	140.053
TOTAL IN ONE PILE							1879.237
TOTAL (IN METRIC TON)							1.879
TOTAL IN 15 PILES OF ONE ABUTMENT (IN METRIC TON)(3014.196*8)							28.189

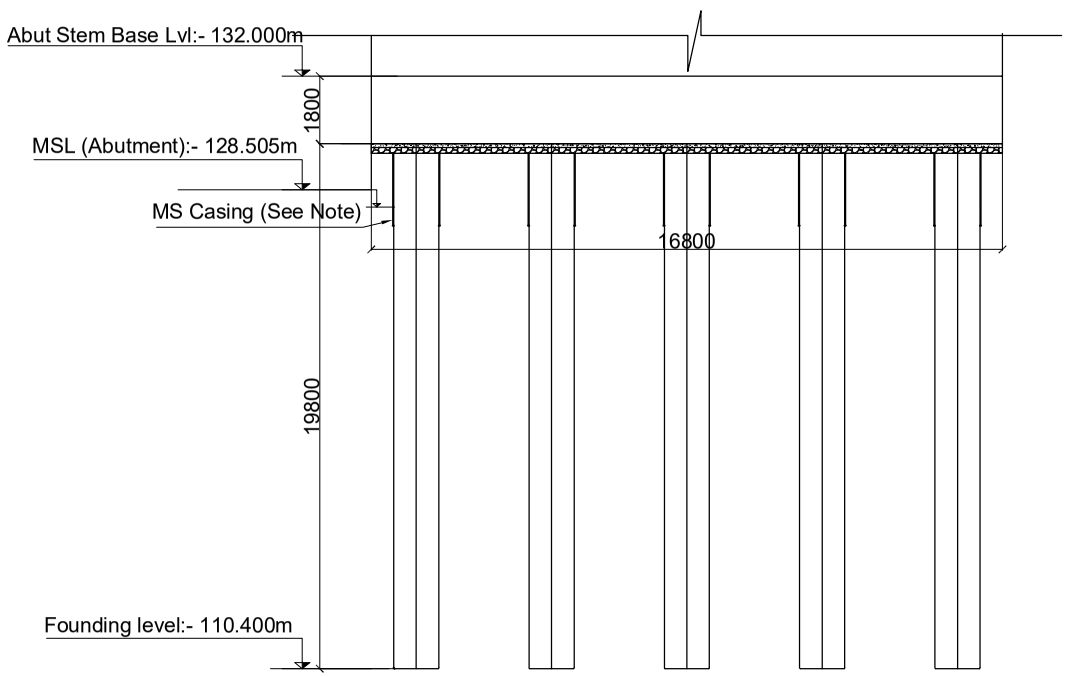

Piles Section at A-A
Scale:-1:200

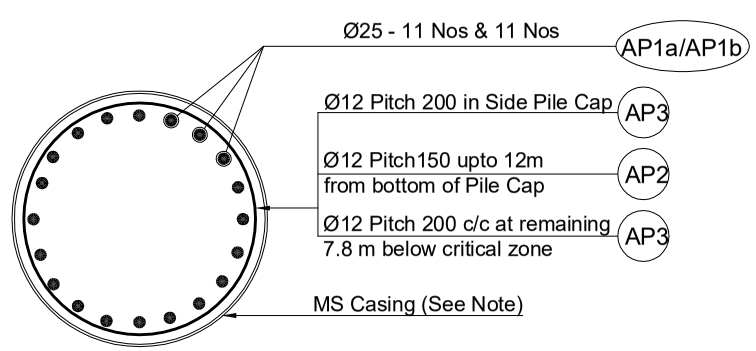

Section at A-A
Scale:-1:30

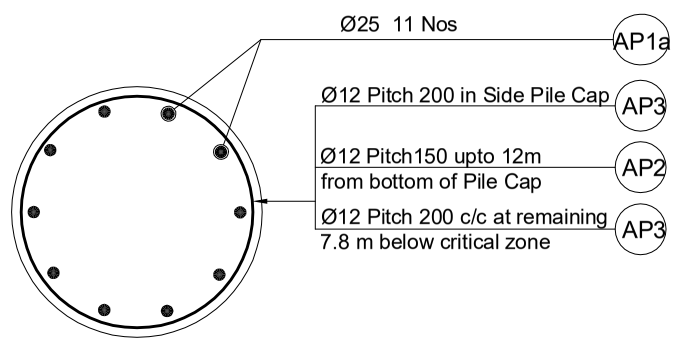

Section at B-B
Scale:-1:30

Location	Design Pile Length m	Design Working load on pile (non - seismic casse)kn	Allowable Bearing Capacity on pile (Scour case) kn	Allowable Bearing Capacity of the Pile (Non Scour case)kn
Abutment	20	1970	2537	2711
Pier	0	0	0	0

Note On MS permament casing on piles: In case piling works are done without temporary casing, the piles shall be lined with 6mm thick MS steel permanent casing up to 1.5 m or 0.5m below MSL whichever is larger (Subject to instruction and approval by the Engineer)

For Construction Methology and Sequence Please See General Notes.

Government of Nepal
Ministry of Physical Infrastructure and Transport
Department of Roads
Project Directorate Office (ADB)
SASEC Highway Improvement Project-
Project Preparatory Consultant (SHIP-PPC)
ADB Loan No: 3722-NEP

CONSULTANT: Soosung Engineering Co. Ltd, Korea in association with ERMC P (Ltd) and TTE-Tech Studio of Engineeering Nepal

IMPLEMENTING AGENCY: DOR, DCID

ROAD NAME: East West Highway (H01)

Butwal - Gorusinghe Section

SHEET TITLE: Reinforcement Details of Abutment Piles of **Satgadi-2 Bridge** (46/H001/293_A)

SCALE: As Shown

	NAME	SIGNATURE	REV NO.	DESCRIPTION
Designed by:	Saroj Bhattarai			
Checked by:	P. Upadhyaya			
Approved by:	Dr. T.H.Choi			

DATE: November , 2022
DWG.NO.: 293_Satgadi-2
SHEET NO.: 17/25

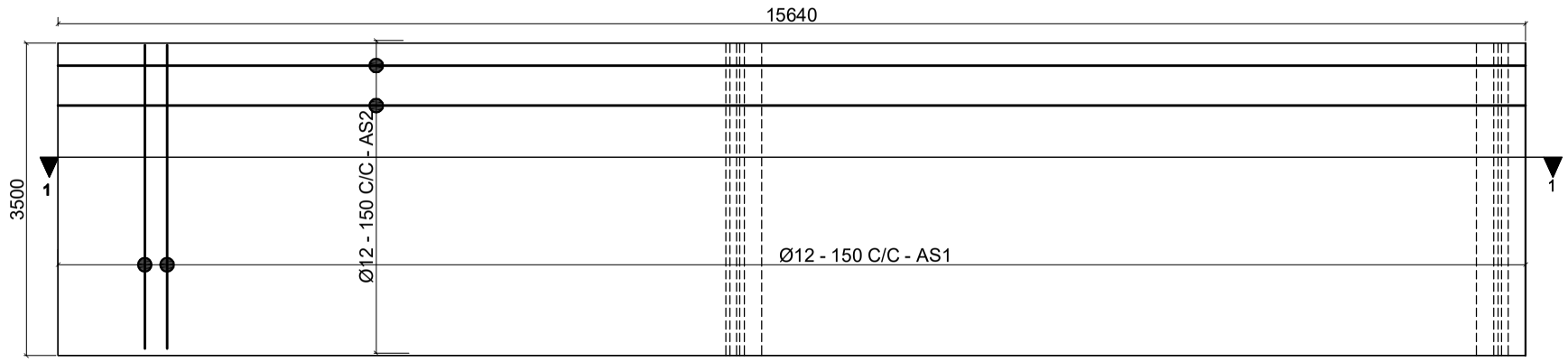

Plan of Reinforcement Details of Approach Slab
Scale:-1:75

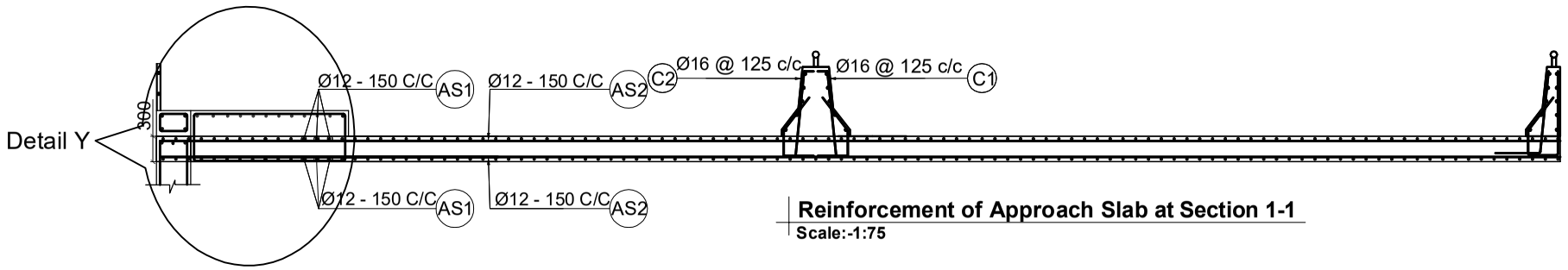

Reinforcement of Approach Slab at Section 1-1
Scale:-1:75

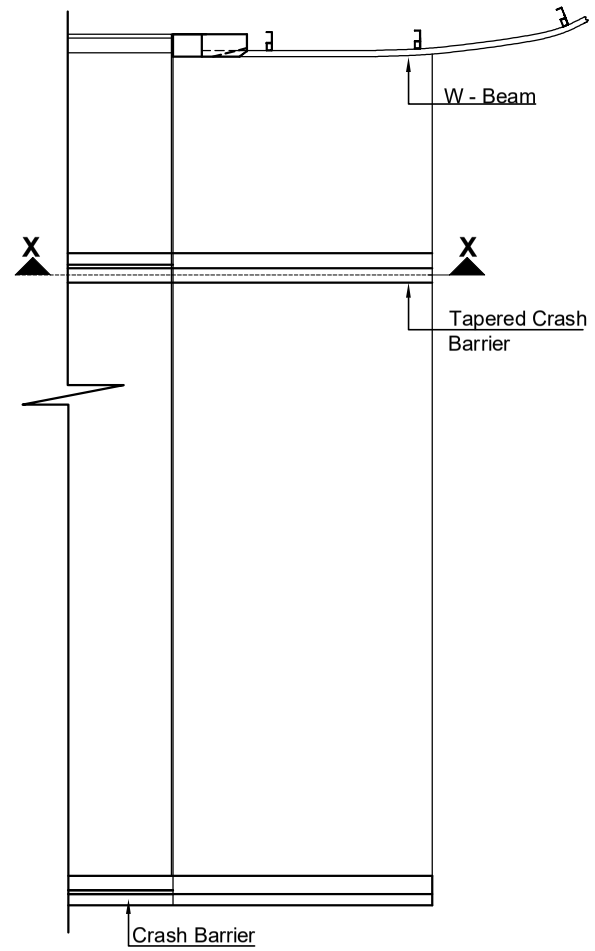

Plan of Approach Slab
Not to Scale

BAR BENDING SCHEDULE OF APPROACH SLAB							
BAR ID	SHAPE OF BAR IN mm (NOT TO SCALE)	SPACING (mm)	Ø OF BARS (mm)	NO. OF BARS	LENGTH (m)	WEIGHT/LENGTH (Kg/m)	TOTAL WEIGHT (Kg)
AS1	3400	-	12	210	3.400	0.888	633.901
AS2	15550	-	12	48	15.550	0.888	662.666
AS3	15550		10	15	15.550	0.617	143.808
AS4	1920 / 520		10	18	5.000	0.617	55.489
TOTAL IN ONE APPROACH SLAB							1495.863
TOTAL WEIGHT IN METRIC TON							1.496

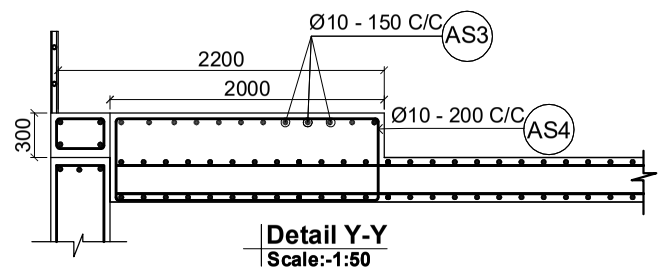

Detail Y-Y
Scale:-1:50

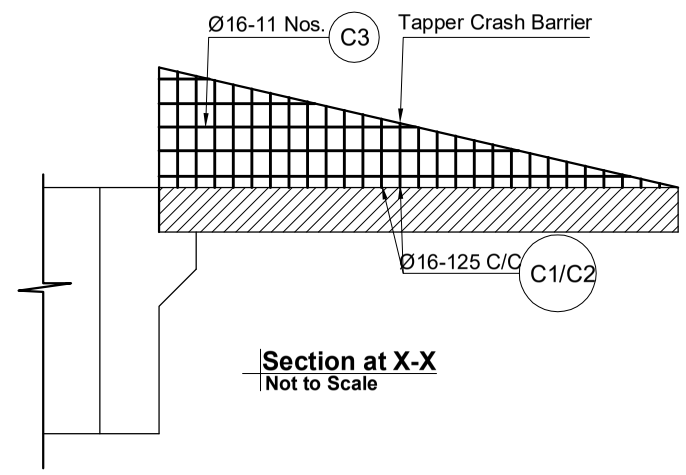

Section at X-X
Not to Scale

Government of Nepal Ministry of Physical Infrastructure and Transport **Department of Roads** **Project Directorate Office (ADB)** **SASEC Highway Improvement Project-** **Project Preparatory Consultant (SHIP-PPC)** **ADB Loan No: 3722-NEP**	**CONSULTANT:** Soosung Engineering Co. Ltd, Korea in association with ERMC P (Ltd) and TSE-Tech Studio of Engineeering Nepal	**IMPLEMENTING AGENCY:** **DOR, DCID** **ROAD NAME:** **East West Highway (H01)** **Butwal - Gorusinghe Section**	**SHEET TITLE:** Reinforcement Details of Approach Slab of **Satgadi-2 Bridge** (46/H001/293_A)	**SCALE:** As Shown		**NAME**	**SIGNATURE**	**REV NO.**	**DESCRIPTION**	**DATE:** November , 2022 **DWG.NO.:** 293_Satgadi-2 **SHEET NO.:** 18/25
					Designed by:	Saroj Bhattarai				
					Checked by:	P. Upadhyaya				
					Approved by:	Dr. T.H.Choi				

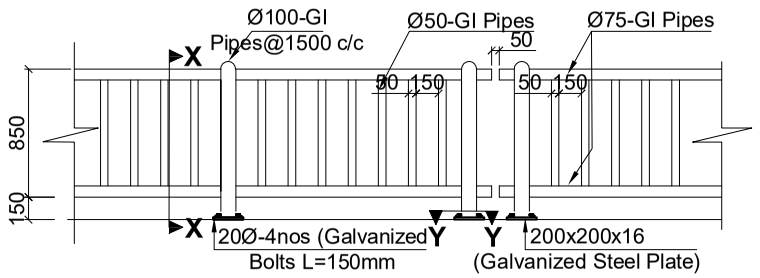

Railing Post Details
Scale:-1:50

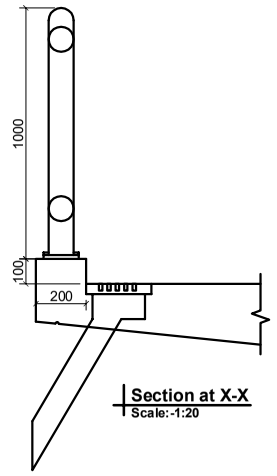

Section at X-X
Scale:-1:20

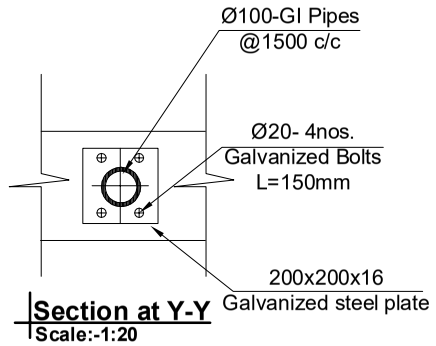

Section at Y-Y
Scale:-1:20

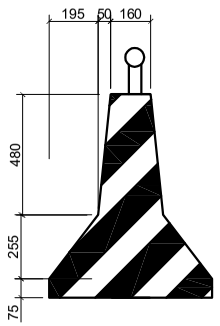

Painting Work on The Bridge Deck
Scale:-1:20

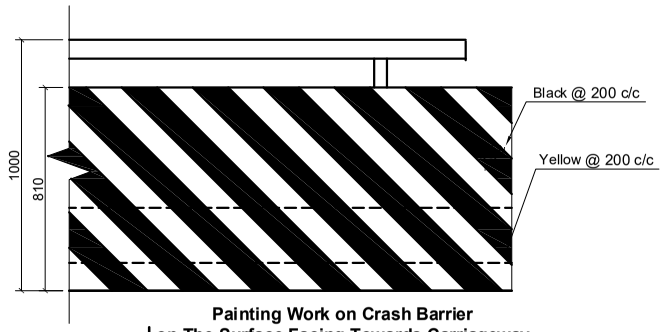

Painting Work on Crash Barrier on The Surface Facing Towards Carriageway
Scale:-1:20

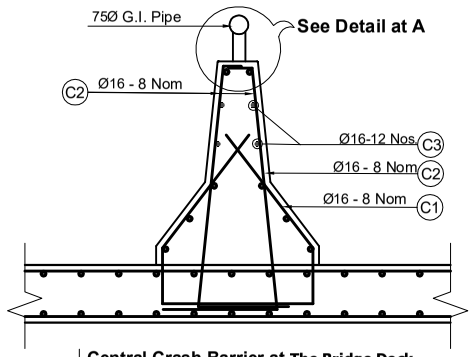

Central Crash Barrier at The Bridge Deck
Scale:-1:20

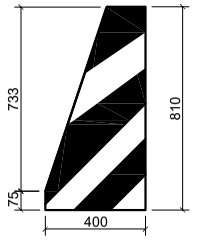

Painting Work on Tapper Crash Barrier
Scale:-1:20

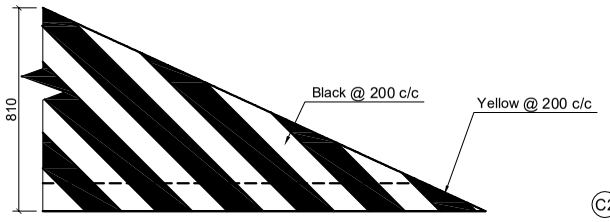

Painting Work on Crash Barrier on The Surface Facing Towards Carriageway
Scale:-1:20

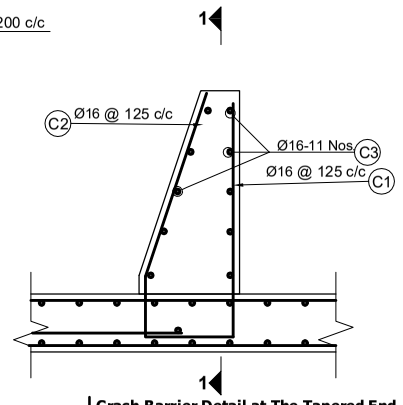

Crash Barrier Detail at The Tapered End
Scale:-1:20

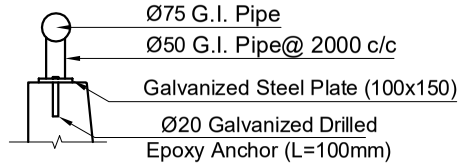

Details at- A-A
Scale:-1:20

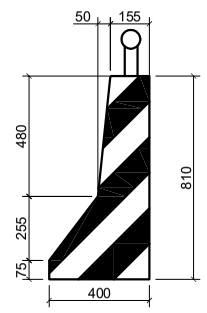

Painting Work on Crash Barrier
Scale:-1:20

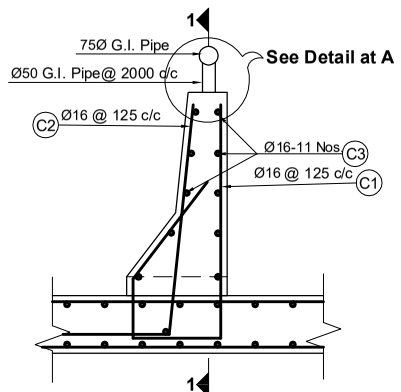

Crash Barrier Detail at The Bridge Deck
Scale:-1:20

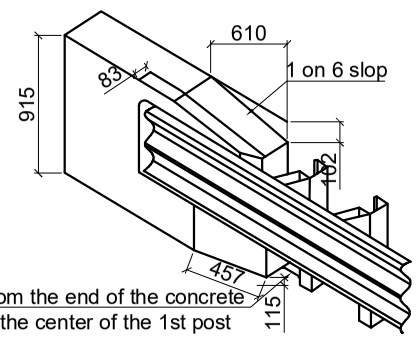

200 mm From the end of the concrete end wall to the center of the 1st post

End Block Part Details
Scale:-1:50

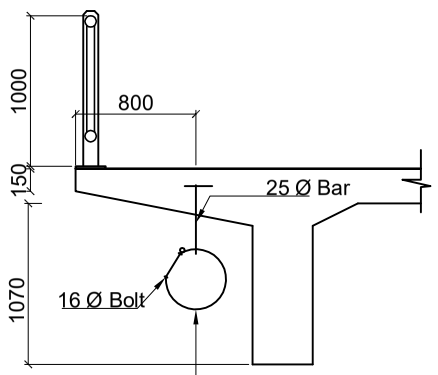

8mm Thick 50 mm Wide Strip
(Diameter of Ring =400mm)
Maximum Load allowed 250 kg/m

Utility hanger Detail
Scale:-1:50

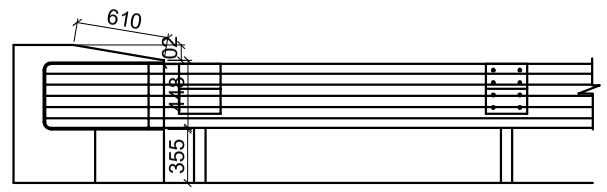

Elevation
Scale:-1:50

NOTES:
The crash barrier shall be sloped at both ends of the bridge as shown and the reinforcement shall be adjusted according to the slope.

BAR BENDING SCHEDULE OF CENTRAL CRASH BARRIER

BAR ID	SHAPE OF BAR IN mm (NOT TO SCALE)	SPACING (MM)	Ø OF BARS (mm)	NO. OF BARS	LENGTH (m)	WEIGHT/LENGTH (kG/m)	TOTAL WEIGHT (kG)
C1	575, 250, 555	125	16	8	2.210	1.578	27.905
C2	915, 730	125	16	16	1.645	1.578	41.542
C3	960		16	11	0.960	1.578	16.667
TOTAL FOR 1M							86.114
TOTAL FOR 1.0M IN MT							0.086

BAR BENDING SCHEDULE OF CRASH BARRIER

BAR ID	SHAPE OF BAR IN mm (NOT TO SCALE)	SPACING (MM)	Ø OF BARS (mm)	NO. OF BARS	LENGTH (m)	WEIGHT/LENGTH (kG/m)	TOTAL WEIGHT (kG)
C1	575, 928, 225, 305	125	16	81	2.030	1.578	259.526
C2	915, 500	125	16	81	1.415	1.578	180.901
C3	960		16	11	9.960	1.578	172.923
TOTAL FOR 10M							613.351
TOTAL FOR 1.0M IN MT							0.061

Government of Nepal
Ministry of Physical Infrastructure and Transport
Department of Roads
Project Directorate Office (ADB)
SASEC Highway Improvement Project-
Project Preparatory Consultant (SHIP-PPC)
ADB Loan No: 3722-NEP

CONSULTANT: Soosung Engineering Co. Ltd, Korea in association with ERMC P (Ltd) and TSE-Tech Studio of Engineeering Nepal

IMPLEMENTING AGENCY: DOR, DCID

ROAD NAME: East West Highway (H01)

Butwal - Gorusinghe Section

SHEET TITLE: Miscellaneous Details - 1 of **Satgadi-2 Bridge** (46/H001/293_A)

SCALE: As Shown

	NAME	SIGNATURE	REV NO.	DESCRIPTION
Designed by:	Saroj Bhattarai			
Checked by:	P. Upadhyaya			
Approved by:	Dr. T.H.Choi			

DATE: November , 2022
DWG.NO.: 293_Satgadi-2
SHEET NO.: 19/25

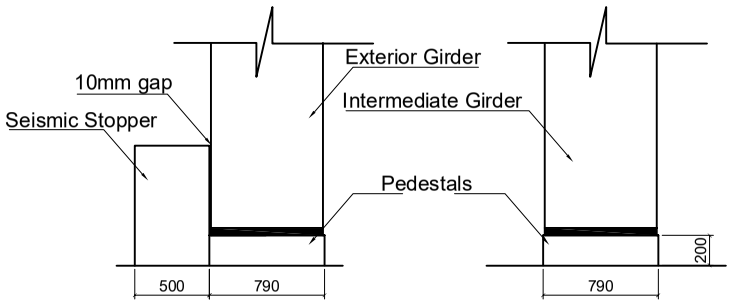

Abutment Cap With Stopper & Pedestal
Scale:-1:50

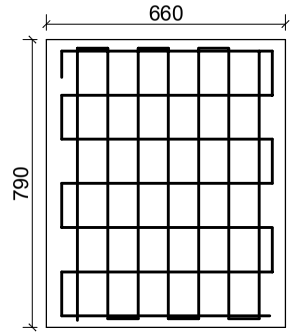

Pedestal Plan
Scale:-1:20

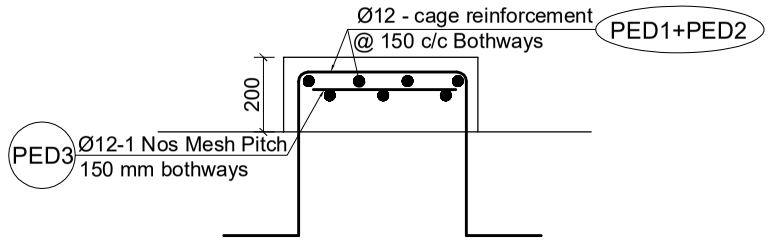

Pedestal Section
Scale:-1:20

Note
On Pedestal Thickness The thickness of the pedestal can be suitably adjusted as per engineer's instruction to retain the height of the ballast wall

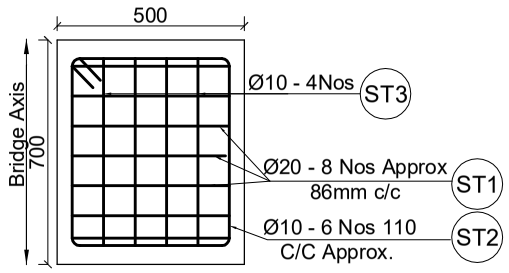

Stoppers Plan
Scale:-1:20

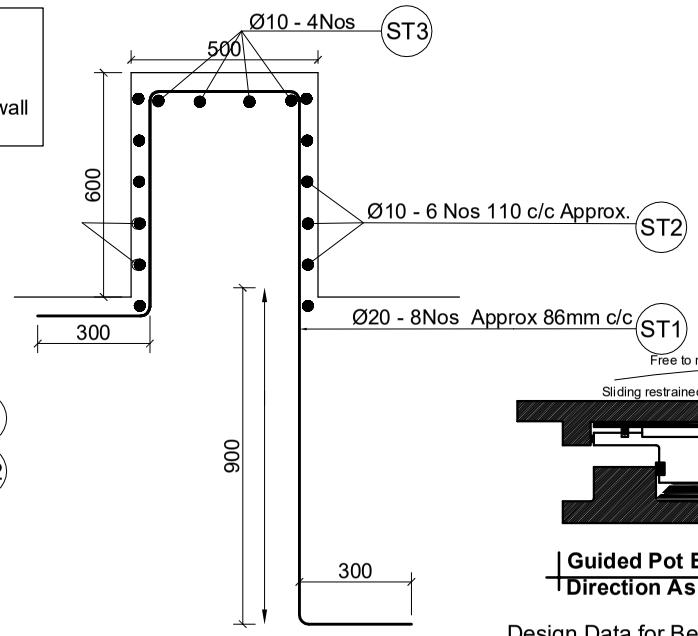

Stoppers Details
Scale:-1:20

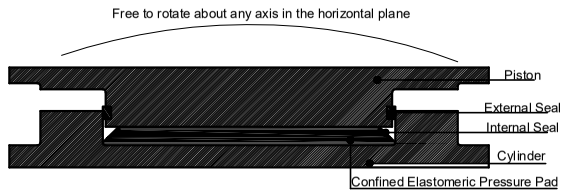

Fixed Pot Bearing As Per IRC : 83 (Part - III) - 2018 Section 2.1.1

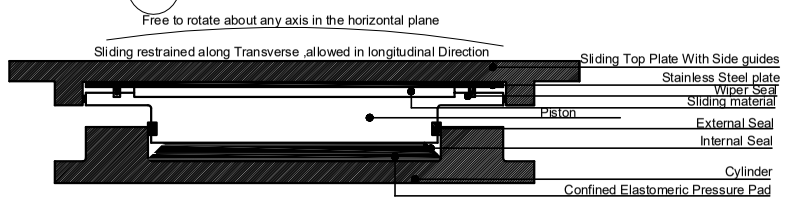

Guided Pot Bearing(For free Bearing) Movement Allowed in to longitudinal Direction As Per IRC : 83 (Part - III) - 2018 Section 2.1.3

Design Data for Bearings (per Bearing)

Load Condiadtion	Items		Load / Displacement/ Moment	
			POT Fixed Bearing	POT_PTFE Free Bearing
Under DL only	V, kN	No EQ	849	849
		EQ	959	959
	HL, kN	No EQ	44	44
		EQ	509	51
	HT, kN	No EQ	0	0
		EQ	229	229
	θ, rad	No EQ	0.0000	0.0000
		EQ	0.0000	0.0000
	Δ, mm		N/A	60
Under Maximum Live Load	V, kN	No EQ	1412	1412
		EQ	1603	1603
	HL, kN	No EQ	157	71
		EQ	664	80
	HT, kN	No EQ	0	0
		EQ	353	353
	θ, rad	No EQ	0.0003	0.0003
		EQ	0.0003	0.0003
	Δ, mm		N/A	60

The Contractor Shall Provide and Supply POT - PTFE Bearings Accoding to Provided load and Deformation.

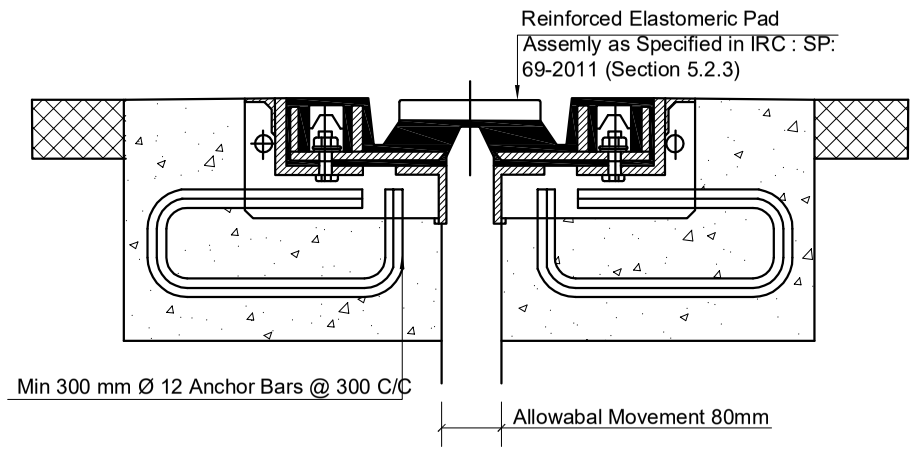

Reinforced Elastomeric Type Expansion joints
Scale:-1:10

BAR BENDING SCHEDULE OF PEDESTAL

BAR ID	SHAPE OF BAR IN mm (NOT TO SCALE)	SPACING (MM)	Ø OF BARS (mm)	NO. OF BARS	LENGTH (m)	WEIGHT/LENGTH (kG/m)	TOTAL WEIGHT (kG)
PED1	710, 920, 200		16	5	2.950	1.578	23.281
PED2	580, 920, 200		16	6	2.820	1.578	26.706
PED3	708, 578, Pitch 150 bothway, 1 layer		16	1	7.420	1.578	11.711
TOTAL WEIGHT IN KG							61.697
TOTAL WEIGHT IN MT							0.062

BAR BENDING SCHEDULE OF STOPPER

BAR ID	SHAPE OF BAR IN mm (NOT TO SCALE)	SPACING (MM)	Ø OF BARS (mm)	NO. OF BARS	LENGTH (m)	WEIGHT/LENGTH (kG/m)	TOTAL WEIGHT (kG)
ST1	400, 600, 1500, 300, 300		20	8	3.100	2.466	61.161
ST2	420, 100, 600		10	6	2.240	0.617	8.286
ST3	600		10	4	0.900	0.617	2.220
TOTAL WEIGHT IN KG							71.666
TOTAL WEIGHT IN MT							0.072

Legends:
EQ = Earthquake condition
V = Vertical load
HL = Horizontal force along the bridge axis
HT = Horizontal force transverse to bridge axis
θ = Rotation about transverse axis
Δ = Maximum longitudinal movement allowed

Notes: Proposed Type of Bearing:- POT-PTFE bearings
1) The POT-Fixed bearings are fixed in position and free to rotate in all directions
2) The POT-PTFE Free bearings are free to rotate in all direction, Free to slide along the the bridge axis and Fixed in position in transverse direction
3) The coefficient of friction, μ for PTFE free bearings is taken as 0.05

Government of Nepal Ministry of Physical Infrastructure and Transport **Department of Roads** **Project Directorate Office (ADB)** **SASEC Highway Improvement Project-** **Project Preparatory Consultant (SHIP-PPC)** **ADB Loan No: 3722-NEP**	**CONSULTANT:** Soosung Engineering Co. Ltd, Korea in association with ERMC P (Ltd) and TSC-Tech Studio of Engineeering Nepal	**IMPLEMENTING AGENCY:** **DOR, DCID** **ROAD NAME:** **East West Highway (H01)** **Butwal - Gorusinghe Section**	**SHEET TITLE:** Miscellaneous Details - 2 of **Satgadi-2 Bridge** (46/H001/293_A)	**SCALE:** As Shown		**NAME**	**SIGNATURE**	**REV NO.**	**DESCRIPTION**	**DATE:** November , 2022 **DWG.NO.:** 293_Satgadi-2 **SHEET NO.:** 20/25
					Designed by:	Saroj Bhattarai				
					Checked by:	P. Upadhyaya				
					Approved by:	Dr. T.H.Choi				

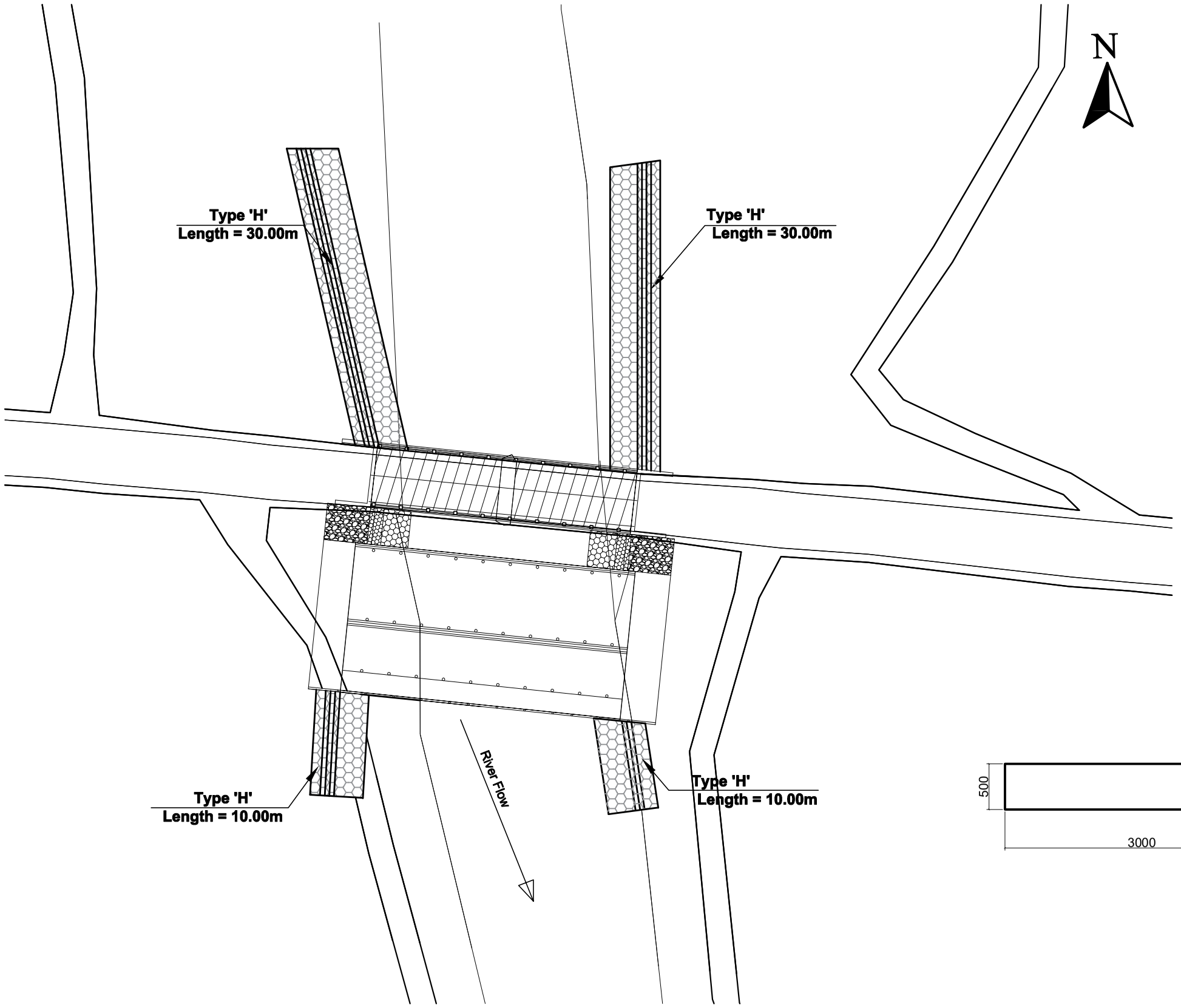

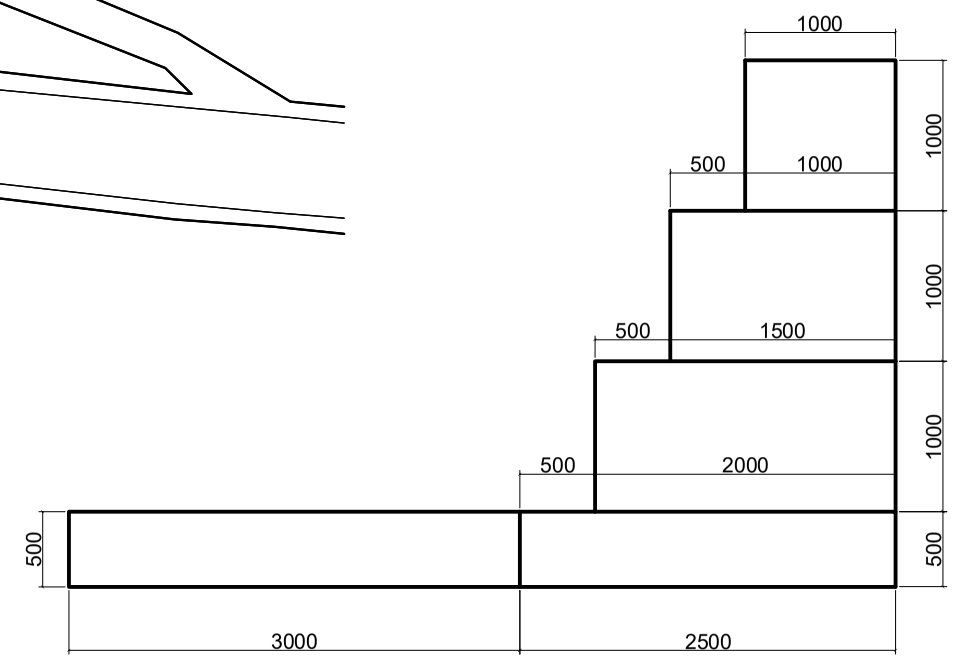

"H" Type River Training Structure
Scale:-1:50

Government of Nepal Ministry of Physical Infrastructure and Transport **Department of Roads** **Project Directorate Office (ADB)** **SASEC Highway Improvement Project-** **Project Preparatory Consultant (SHIP-PPC)** **ADB Loan No: 3722-NEP**	**CONSULTANT:** Soosung Engineering Co. Ltd, Korea in association with ERMC P (Ltd) and TPE-Tech Studio of Engineeering Nepal	**IMPLEMENTING AGENCY:** **DOR, DCID** **ROAD NAME:** **East West Highway (H01)** **Butwal - Gorusinghe Section**	**SHEET TITLE:** River Training Work of **Satgadi-2 Bridge** (46/H001/293_A)	**SCALE:** As Shown		**NAME**	**SIGNATURE**	**REV NO.**	**DESCRIPTION**	**DATE:** November , 2022 **DWG.NO.:** 293_Satgadi-2 **SHEET NO.:** 21/25
					Designed by:	Saroj Bhattarai				
					Checked by:	P. Upadhyaya				
					Approved by:	Dr. T.H.Choi				

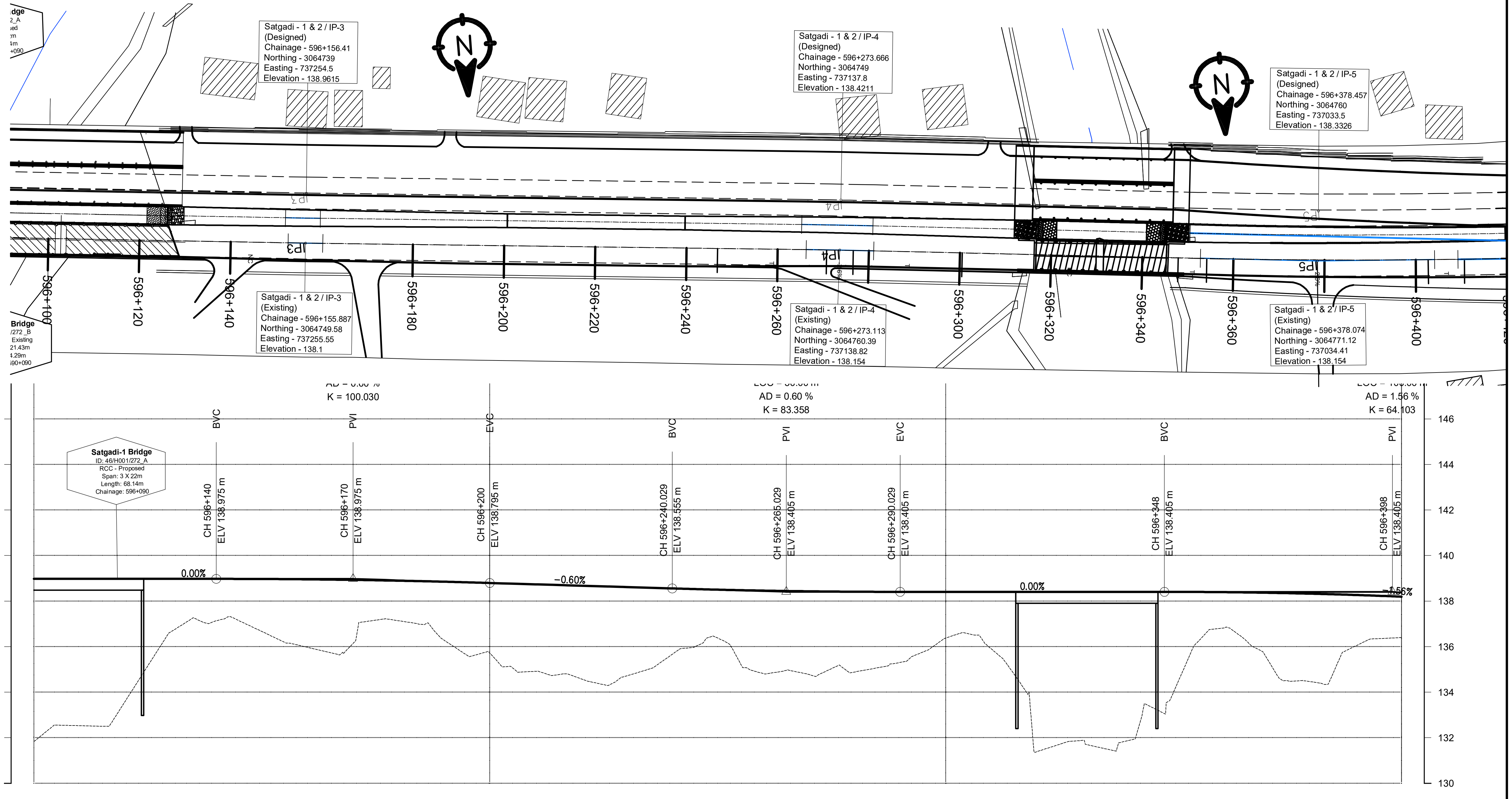

CHAINAGE(Km)	DESIGN LEVEL(m)	EXISTING LEVEL(m)
596+100	138.975	131.830
596+110	138.975	132.528
596+120	138.975	133.594
596+130	138.975	136.645
596+140	138.975	137.136
596+150	138.970	136.664
596+160	138.955	135.971
596+170	138.930	136.139
596+180	138.895	137.136
596+190	138.850	136.279
596+200	138.795	135.723
596+210	138.735	134.915
596+220	138.675	134.587
596+230	138.615	134.712
596+240	138.555	135.659
596+250	138.501	136.376
596+260	138.459	134.816
596+270	138.429	134.777
596+280	138.411	134.886
596+290	138.405	135.306
596+300	138.405	136.376
596+310	138.405	135.904
596+320	138.405	131.387
596+330	138.405	131.881
596+340	138.405	131.871
596+350	138.405	134.003
596+360	138.394	136.797
596+370	138.367	135.644
596+380	138.325	134.463
596+390	138.267	136.035
596+400	138.194	136.389

HORIZONTAL ALIGNMENT (RIGHT / LEFT): IP-3 R=1494.50; IP-4 R=1505.50; IP-5 R=1500.00

SUPER ELEVATION: 596+100; NC; 596+246.813; T; 596+270.729; -2.5555555555556; 596+276.603; T; 596+300.52; NC; 596+347.88; T; 596+354.18; 2; 596+400

Government of Nepal
Ministry of Physical Infrastructure and Transport
Department of Roads
Project Directorate Office (ADB)
SASEC Highway Improvement Project-
Project Preparatory Consultant (SHIP-PPC)
ADB Loan No: 3722-NEP

CONSULTANT:
Soosung Engineering Co. Ltd, Korea in association with
ERMC P (Ltd), Nepal
and
TSE-Tech Studio of Engineeering

IMPLEMENTING AGENCY:
DOR, DCID

ROAD NAME:
East West Highway (H01)
Butwal - Gorusinghe Section

SHEET TITLE:
Plan & Profile
of
Satgadi_2 Bridge
596+100 - 596+400

SCALE:
0 2 4 6m Vertical Scale
0 10 20 30m Horizontal Scale

	NAME	SIGNATURE	REV NO.	DESCRIPTION
DESIGNED BY:	Saroj Bhattarai			
CHECKED BY:	P. Upadhyaya			
APPROVED BY:	Dr. T.H.Choi			

DATE: November , 2022
DWG.NO.: 293_Satgadi-2
SHEET NO.: 22/25

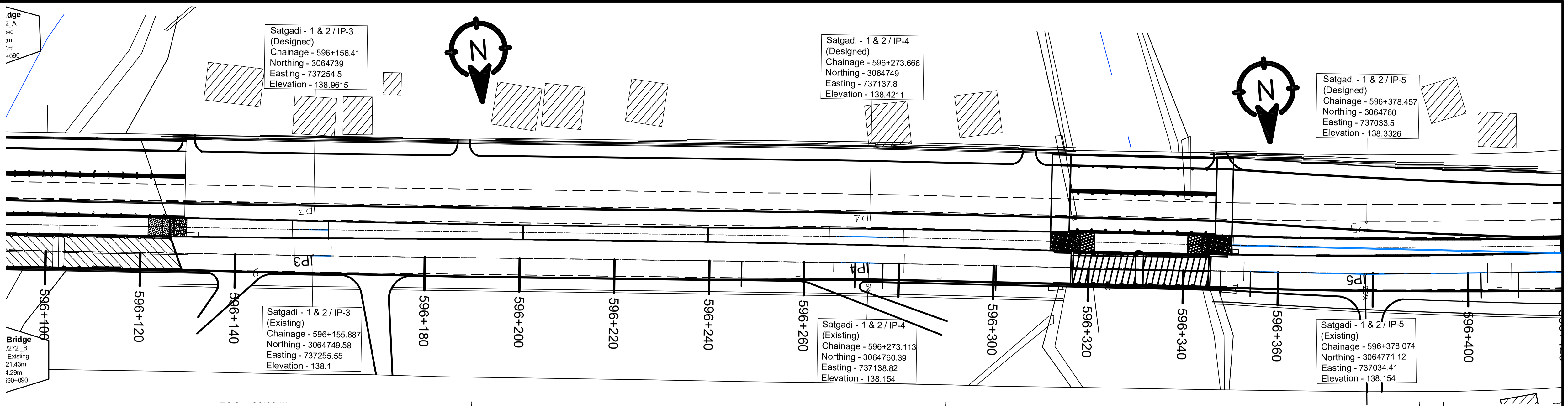

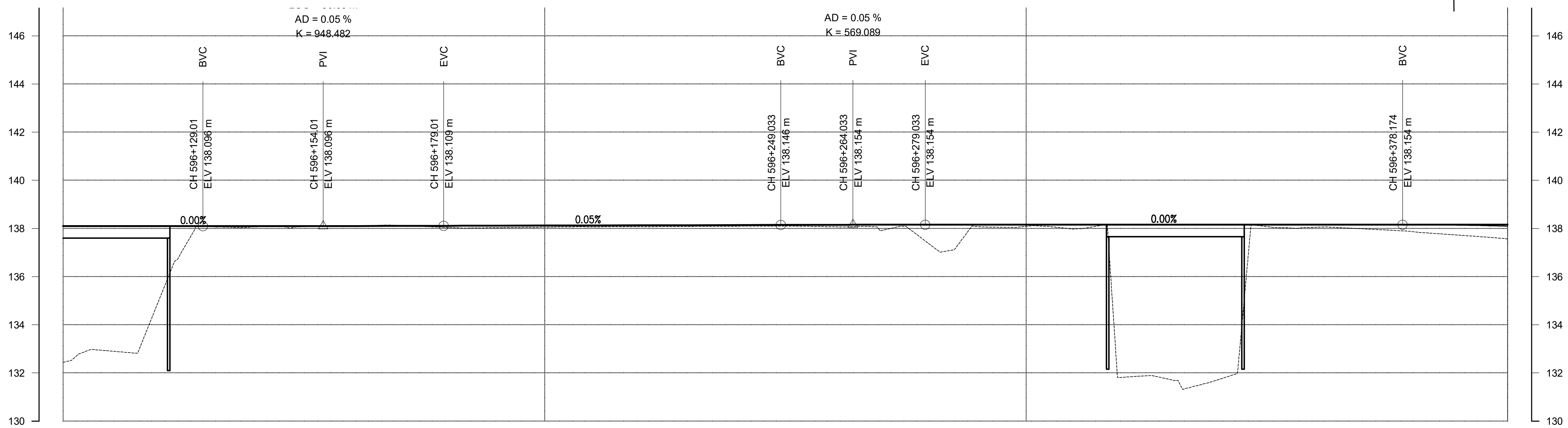

CHAINAGE(Km)	EXISTING LEVEL(m)	DESIGN LEVEL(m)
596+100	132.440	138.096
596+110	132.907	138.096
596+120	135.081	138.096
596+130	138.083	138.096
596+140	138.066	138.097
596+150	138.074	138.098
596+160	138.104	138.101
596+170	138.120	138.105
596+180	138.040	138.110
596+190	138.031	138.115
596+200	138.055	138.120
596+210	138.068	138.126
596+220	138.075	138.131
596+230	138.085	138.136
596+240	138.094	138.141
596+250	138.101	138.147
596+260	138.071	138.151
596+270	137.917	138.153
596+280	137.338	138.154
596+290	138.076	138.154
596+300	138.086	138.154
596+310	137.980	138.154
596+320	131.819	138.154
596+330	131.720	138.154
596+340	131.727	138.154
596+350	138.076	138.154
596+360	138.049	138.154
596+370	137.985	138.154
596+380	137.872	138.154
596+390	137.720	138.135
596+400	137.569	138.090

HORIZONTAL ALIGNMENT (RIGHT / LEFT): IP-3 R=1505.50; IP-4 R=1494.50; IP-5 R=1500.00

SUPER ELEVATION: 596+100; NC; 596+267.146; 596+270.063; -2.5555555555556; 596+276.164; 596+279.08; NC; 596+351.928; 596+354.845; T; 2.5555555555556; 596+400

Government of Nepal Ministry of Physical Infrastructure and Transport **Department of Roads** **Project Directorate Office (ADB)** **SASEC Highway Improvement Project-** **Project Preparatory Consultant (SHIP-PPC)** **ADB Loan No: 3722-NEP**	
CONSULTANT:	Soosung Engineering Co. Ltd, Korea in association with ERMC P (Ltd), Nepal and TSE-Tech Studio of Engineeering
IMPLEMENTING AGENCY:	DOR, DCID
ROAD NAME:	East West Highway (H01) Butwal - Gorusinghe Section
SHEET TITLE:	Plan & Profile of Existing Satgadi-2 Bridge 596+100 - 596+400
SCALE:	Vertical Scale 0 2 4 6m; Horizontal Scale 0 10 20 30m

	NAME	SIGNATURE	REV NO.	DESCRIPTION
DESIGNED BY:	Saroj Bhattarai			
CHECKED BY:	P. Upadhyaya			
APPROVED BY:	Dr. T.H.Choi			

DATE: November , 2022

DWG.NO.: 293_Satgadi-2

SHEET NO.: 23/25

Ch:596+150
GL:137.641
GL: 136.638 DL:138.047
DL: 138.970
GL: 138.072
DL: 138.098

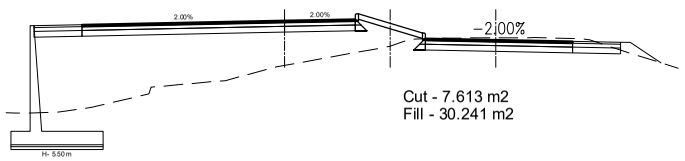

Ch:596+160
GL:137.680
GL: 135.959 DL:137.997
DL: 138.955
GL: 138.105
DL: 138.101

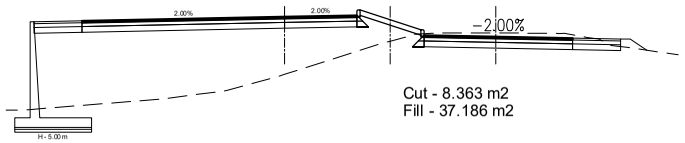

Ch:596+170
GL:137.852
GL: 136.191 DL:137.929
DL: 138.930
GL: 138.122
DL: 138.105

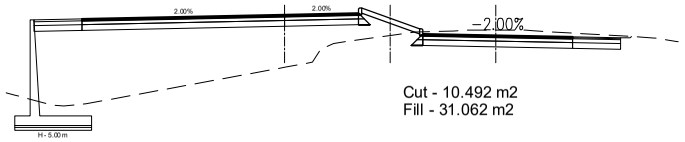

Ch:596+180
GL:137.697
GL: 137.129 DL:137.844
DL: 138.895
GL: 138.042
DL: 138.110

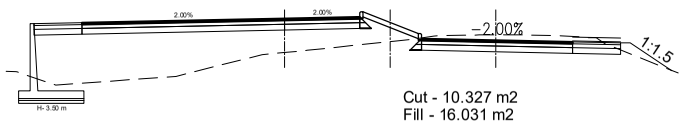

Ch:596+190
GL:137.802
GL: 136.247 DL:137.762
DL: 138.850
GL: 138.031
DL: 138.115

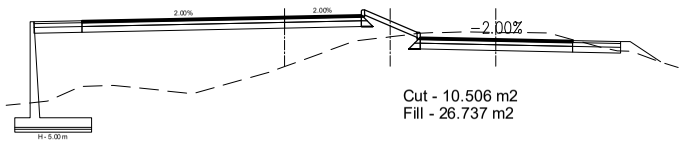

Ch:596+200
GL:137.386
GL: 135.668 DL:137.705
DL: 138.795
GL: 138.054
DL: 138.120

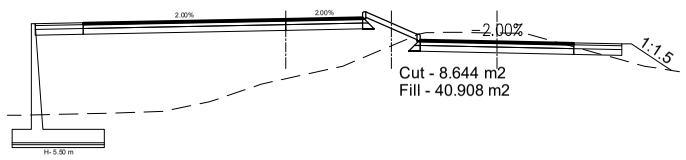

Ch:596+210
GL:137.405
GL: 134.918 DL:137.671
DL: 138.735
GL: 138.067
DL: 138.126

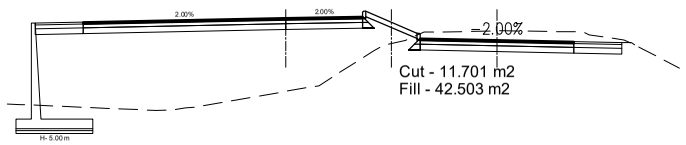

Ch:596+220
GL:137.211
GL: 134.569 DL:137.660
DL: 138.675
GL: 138.074
DL: 138.131

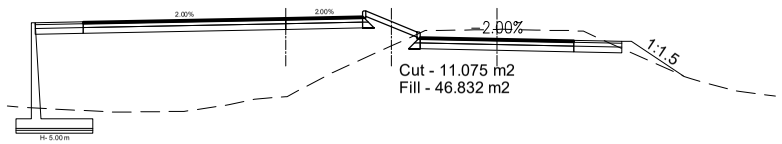

Ch:596+230
GL:137.302
GL: 134.727 DL:137.674
DL: 138.615
GL: 138.085
DL: 138.136

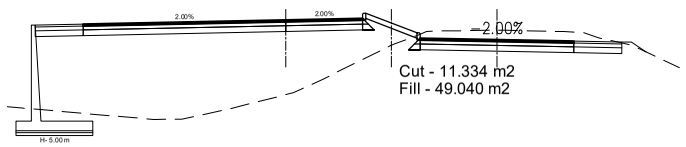

Ch:596+240
GL:137.245
GL: 135.695 DL:137.711
DL: 138.555
GL: 138.093
DL: 138.141

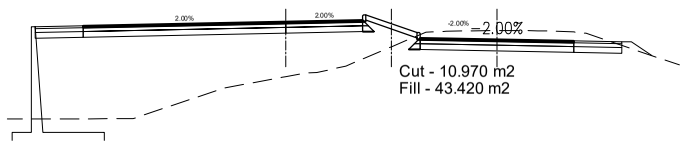

Ch:596+250
GL:137.291
GL: 136.353 DL:137.772
DL: 138.501
GL: 138.101
DL: 138.147

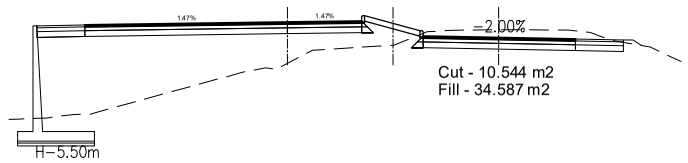

Ch:596+260
GL:137.287
GL: 134.803 DL:137.856
DL: 138.459
GL: 138.072
DL: 138.151

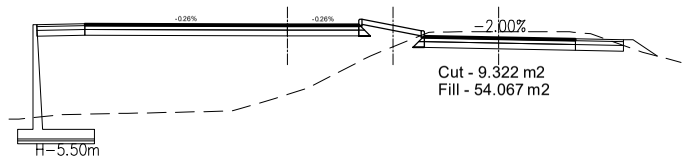

Ch:596+270
GL:137.235
GL: 134.761 DL:137.951
DL: 138.429
GL: 137.905
DL: 138.153

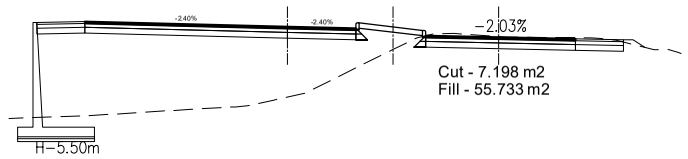

Ch:596+280
GL:136.014
GL: 134.897 DL:138.029
DL: 138.411
GL: 137.383
DL: 138.154

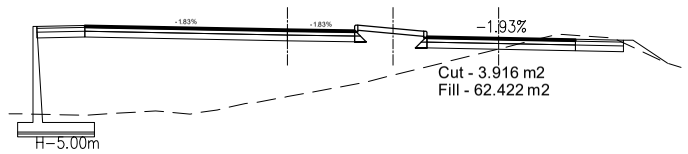

Ch:596+290
GL:137.141
GL: 135.317 DL:138.089
DL: 138.405
GL: 138.079
DL: 138.154

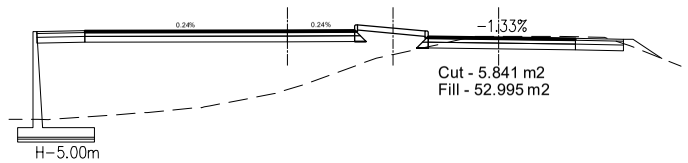

Government of Nepal Ministry of Physical Infrastructure and Transport **Department of Roads** **Project Directorate Office (ADB)** **SASEC Highway Improvement Project-** **Project Preparatory Consultant (SHIP-PPC)** **ADB Loan No: 3722-NEP**	**CONSULTANT:** Soosung Engineering Co. Ltd, Korea in association with ERMC P (Ltd), Nepal and TSE-Tech Studio of Engineeering	**IMPLEMENTING AGENCY:** **DOR, DCID** **ROAD NAME:** **East West Highway (H01)** **Butwal - Gorusinghe Section**	**SHEET TITLE:** Cross Section of Ch:596+150 - 596+290	**SCALE:** 0 2 4 6m Vertical Scale 0 10 20 30m Horizontal Scale		**NAME**	**SIGNATURE**	**REV NO.**	**DESCRIPTION**	**DATE:** November , 2022 **DWG.NO.:** 293_Satgadi-2 **SHEET NO.:** 23.1/25
					DESIGNED BY:	Saroj Bhattarai				
					CHECKED BY:	P. Upadhyaya				
					APPROVED BY:	Dr. T.H.Choi				

Ch:596+300
GL:137.786
DL:138.129

GL: 136.398 DL: 138.405 | GL: 138.080 DL: 138.154

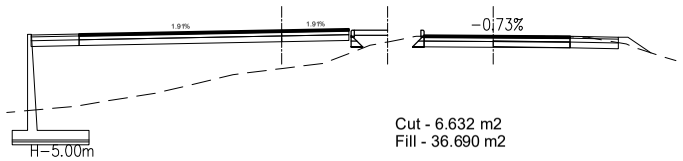

Cut - 6.632 m2
Fill - 36.690 m2

Ch:596+310
GL:137.231
DL:138.151

GL: 135.853 DL: 138.405 | GL: 137.976 DL: 138.154

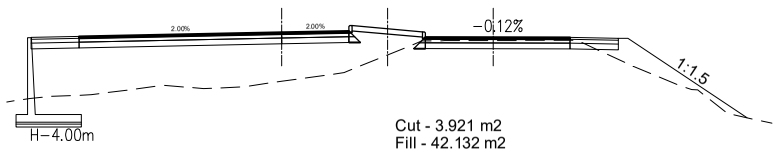

Cut - 3.921 m2
Fill - 42.132 m2

Ch:596+320
GL:131.681
DL:138.154

GL: 131.407 DL: 138.405 | GL: 131.815 DL: 138.154

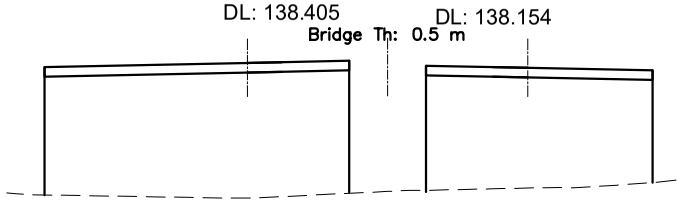

Ch:596+330
GL:131.881
DL:138.154

GL: 131.885 DL: 138.405 | GL: 131.734 DL: 138.154

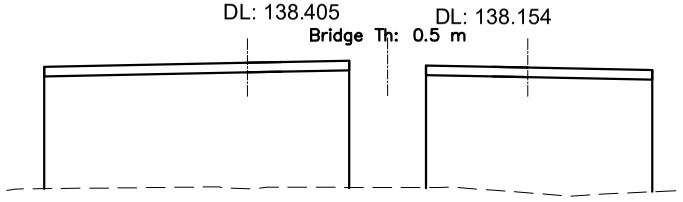

Ch:596+340
GL:131.677
DL:138.154

GL: 131.885 DL: 138.405 | GL: 131.707 DL: 138.154

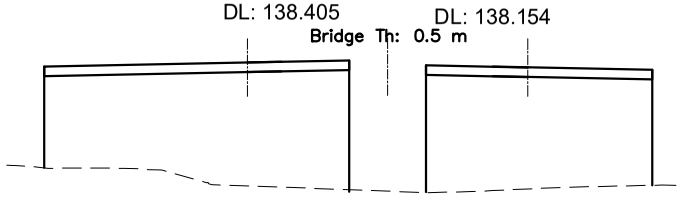

Ch:596+350
GL:137.288
DL:138.153

GL: 134.142 DL: 138.405 | GL: 138.083 DL: 138.154

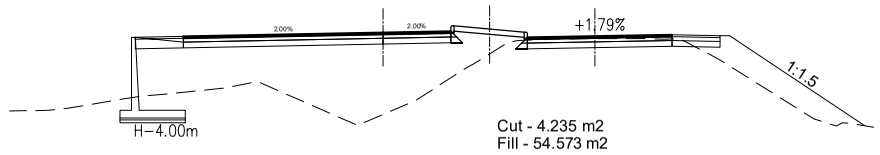

Cut - 4.235 m2
Fill - 54.573 m2

Ch:596+360
GL:137.696
DL:138.143

GL: 136.803 DL: 138.394 | GL: 138.048 DL: 138.154

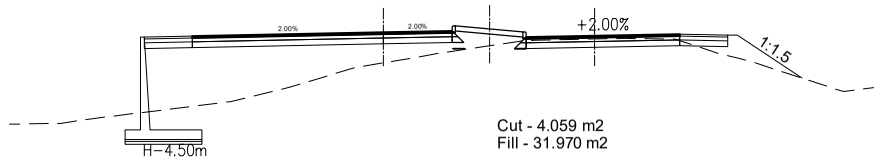

Cut - 4.059 m2
Fill - 31.970 m2

Ch:596+370
GL:137.792
DL:138.121

GL: 135.567 DL: 138.367 | GL: 137.987 DL: 138.154

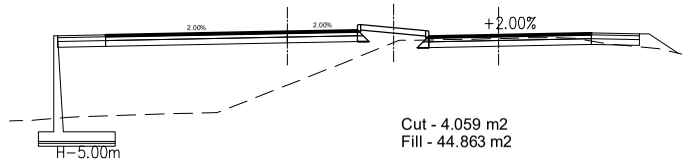

Cut - 4.059 m2
Fill - 44.863 m2

Ch:596+380
GL:137.006
DL:138.088

GL: 134.458 DL: 138.325 | GL: 137.876 DL: 138.154

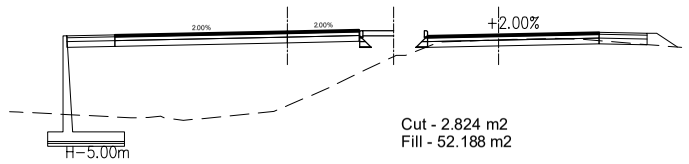

Cut - 2.824 m2
Fill - 52.188 m2

Ch:596+390
GL:137.258
DL:138.043

GL: 136.051 DL: 138.267 | GL: 137.722 DL: 138.135

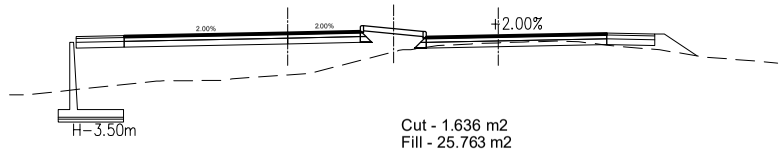

Cut - 1.636 m2
Fill - 25.763 m2

Ch:596+400
GL:137.178
DL:137.987

GL: 136.380 DL: 138.194 | GL: 137.571 DL: 138.090

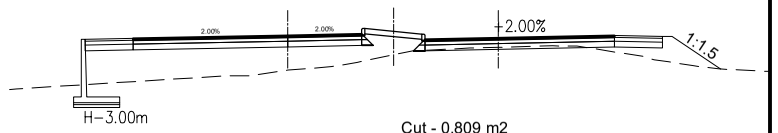

Cut - 0.809 m2
Fill - 23.115 m2

Ch:596+410
GL:137.166
DL:137.919

GL: 136.168 DL: 138.105 | GL: 137.414 DL: 138.019

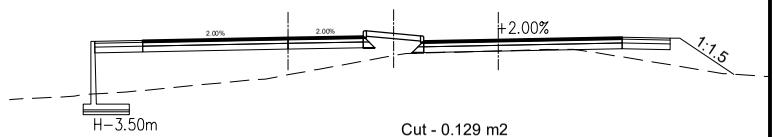

Cut - 0.129 m2
Fill - 26.269 m2

Ch:596+420
GL:136.777
DL:137.840

GL: 136.273 DL: 138.001 | GL: 137.246 DL: 137.920

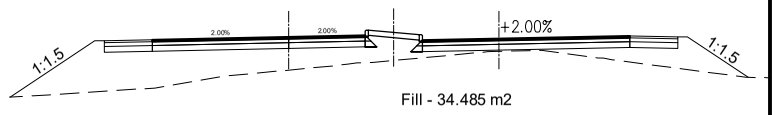

Fill - 34.485 m2

Ch:596+430
GL:136.686
DL:137.749

GL: 136.141 DL: 137.881 | GL: 137.048 DL: 137.796

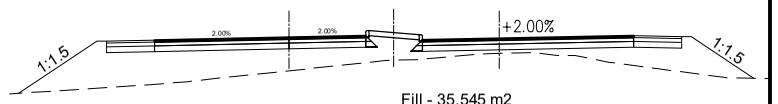

Fill - 35.545 m2

Ch:596+440
GL:136.612
DL:137.647

GL: 135.961 DL: 137.745 | GL: 136.837 DL: 137.662

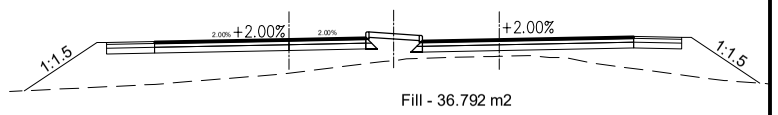

Fill - 36.792 m2

Government of Nepal Ministry of Physical Infrastructure and Transport **Department of Roads** **Project Directorate Office (ADB)** **SASEC Highway Improvement Project-** **Project Preparatory Consultant (SHIP-PPC)** **ADB Loan No: 3722-NEP**	**CONSULTANT:** Soosung Engineering Co. Ltd, Korea in association with ERMC P (Ltd), Nepal and TSE-Tech Studio of Engineeering	**IMPLEMENTING AGENCY:** **DOR, DCID** **ROAD NAME:** **East West Highway (H01)** **Butwal - Gorusinghe Section**	**SHEET TITLE:** Cross Section of Ch:596+300 - 596+440	**SCALE:** 0 2 4 6m Vertical Scale 0 10 20 30m Horizontal Scale		**NAME**	**SIGNATURE**	**REV NO.**	**DESCRIPTION**
					DESIGNED BY:	Saroj Bhattarai			
					CHECKED BY:	P. Upadhyaya			
					APPROVED BY:	Dr. T.H.Choi			

DATE: November , 2022
DWG.NO.: 293_Satgadi-2
SHEET NO.: 23.2/25

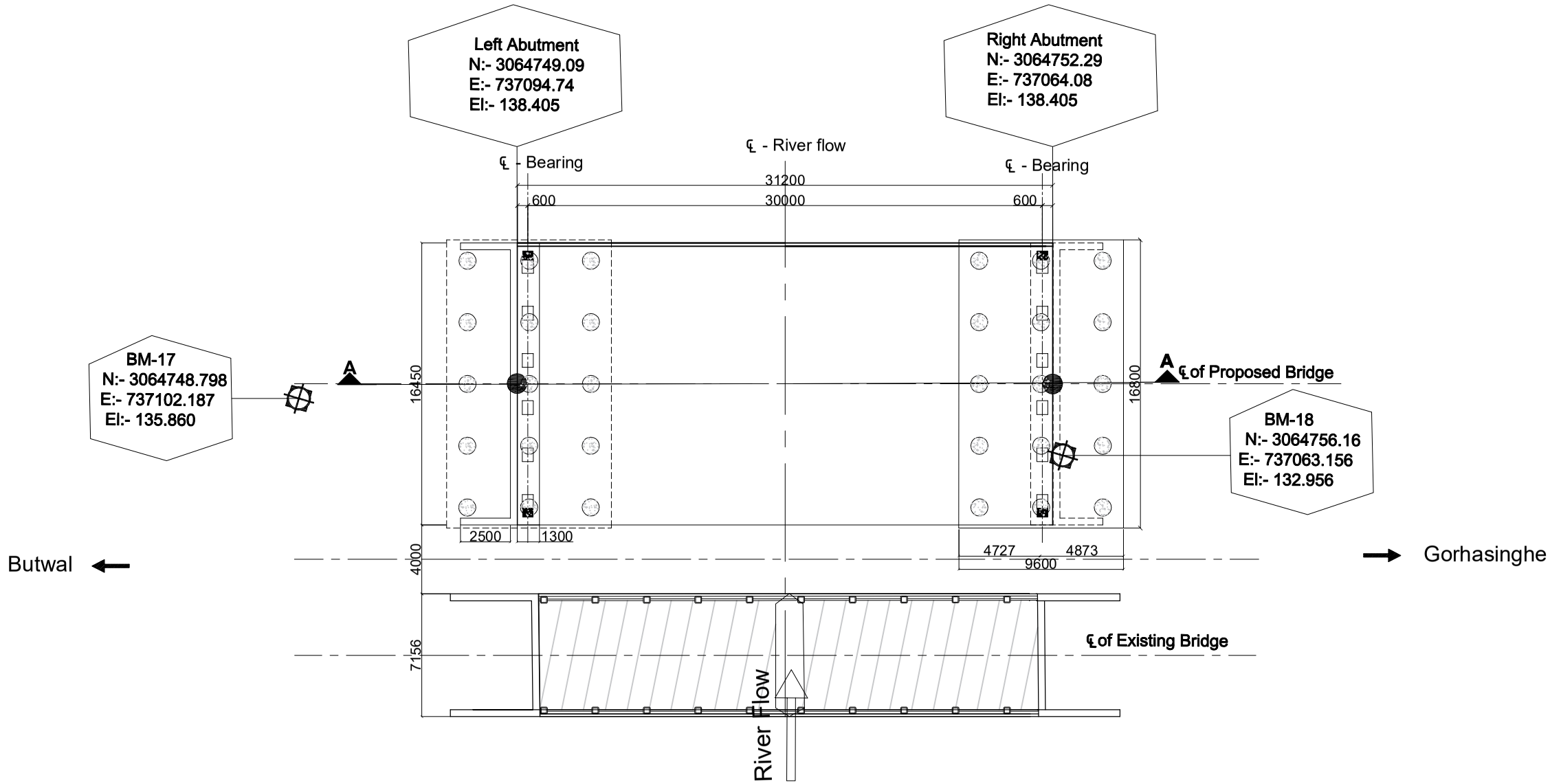

Layout Plan
Scale:-1:300

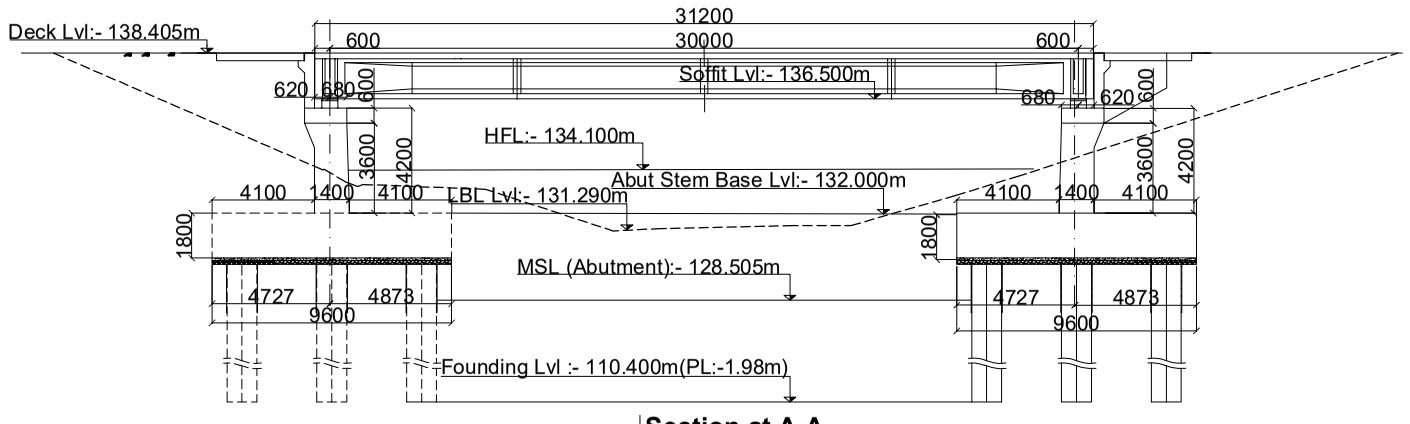

Section at A-A
Scale:-1:300

Government of Nepal Ministry of Physical Infrastructure and Transport **Department of Roads** **Project Directorate Office (ADB)** **SASEC Highway Improvement Project-** **Project Preparatory Consultant (SHIP-PPC)** **ADB Loan No: 3722-NEP**	**CONSULTANT:** Soosung Engineering Co. Ltd, Korea in association with ERMC P (Ltd) and TSC-Tech Studio of Engineeering Nepal	**IMPLEMENTING AGENCY:** **DOR, DCID** **ROAD NAME:** **East West Highway (H01)** **Butwal - Gorusinghe Section**	**SHEET TITLE:** Layout Plan of **Satgadi-2 Bridge** (46/H001/303_A)	**SCALE:** As Shown		**NAME**	**SIGNATURE**	**REV NO.**	**DESCRIPTION**	**DATE:** November , 2022 **DWG.NO.:** 293_Satgadi-2 **SHEET NO.:** 24/25
					Designed by:	Saroj Bhattarai				
					Checked by:	P. Upadhyaya				
					Approved by:	Dr. T.H.Choi				

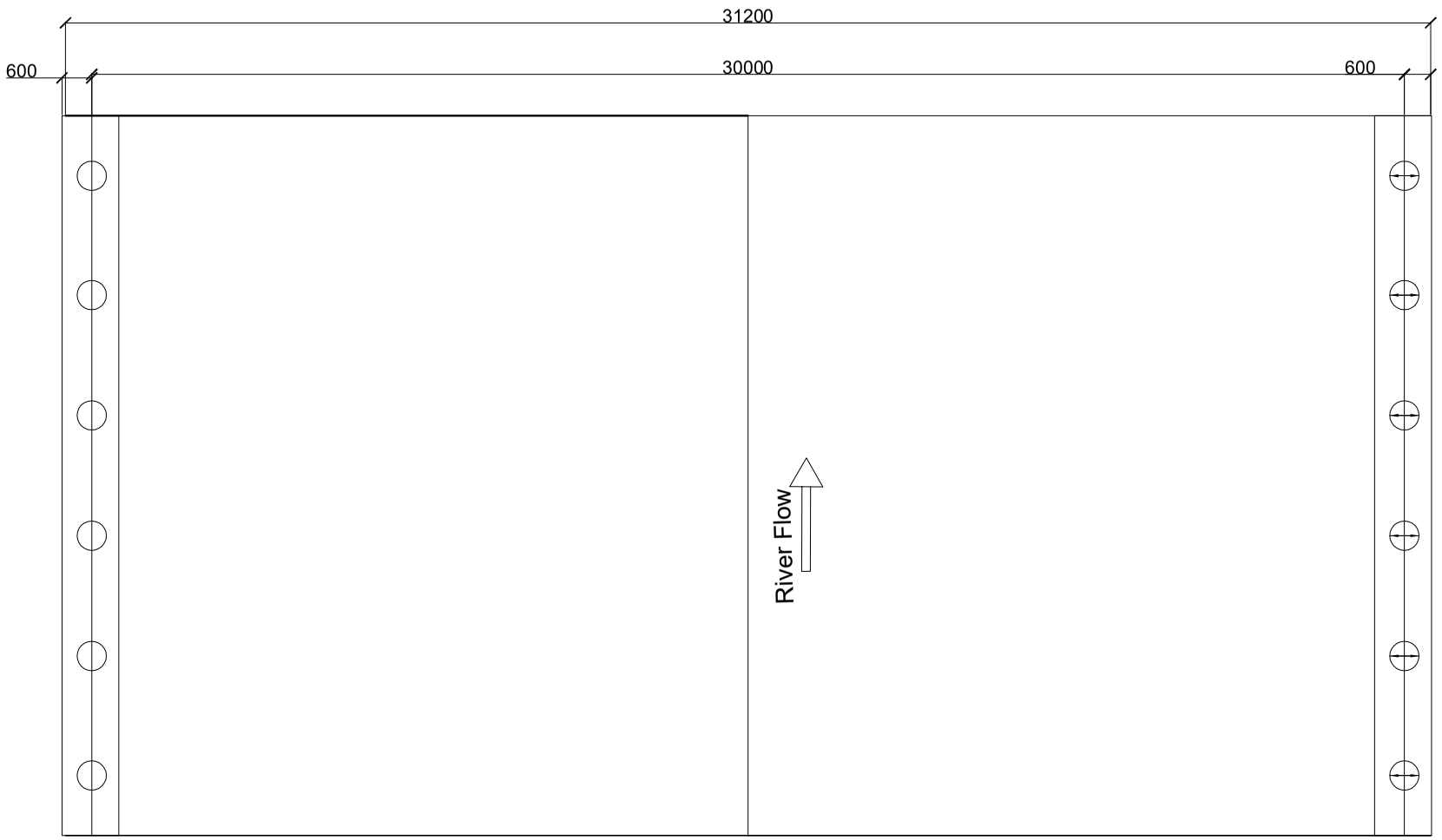

Layout of Bearing

Scale:-1:150

Legend

Elastomeric bearing.
Partial movement allowed in longitudinal direction.
Restrained to transverse movement.Free to rotate in any direction.

Fixed Pot-bearing.
Restrainde to lateral movement,Free to rotate in aney direction.

Free Pot-bearing.
Partial movement allowed in longitudinal direction.
Restrained to transverse movement.Free to rotate in any direction.

Government of Nepal Ministry of Physical Infrastructure and Transport **Department of Roads** **Project Directorate Office (ADB)** **SASEC Highway Improvement Project-** **Project Preparatory Consultant (SHIP-PPC)** **ADB Loan No: 3722-NEP**	**CONSULTANT:** Soosung Engineering Co. Ltd, Korea in association with ERMC P (Ltd) and TE-Tech Studio of Engineeering Nepal	**IMPLEMENTING AGENCY:** **DOR, DCID** **ROAD NAME:** **East West Highway (H01)** **Butwal - Gorusinghe Section**	**SHEET TITLE:** Layout Plan of **Satgadi-2 Bridge** (46/H001/303_A)	**SCALE:** As Shown		**NAME**	**SIGNATURE**	**REV NO.**	**DESCRIPTION**	**DATE:** November , 2022 **DWG.NO.:** 293_Satgadi-2 **SHEET NO.:** 25/25
					Designed by:	Saroj Bhattarai				
					Checked by:	P. Upadhyaya				
					Approved by:	Dr. T.H.Choi				

Government of Nepal

Ministry of Physical Infrastructure and Transport

Department of Roads

Project Directorate (ADB)

Implementing Agency : DOR, DCID

Project Preparatory Consultants

Under

SASEC Highway Improvement Project (SHIP-PPC)

(ADB Loan No: 3722 Nep)

Contract No. SHIP/PPC/2020/02

Soila Bridge(46-H001-294_AB)

St. Ch : 597+452.40 ~ End Ch : 597+465.60

Detailed Drawing

Butwal - Gorusinghe Sector

November,2022

CONTENTS

S.No.	DESCRIPTION	DWG. NO	NO. OF SHEETS
1.	General Notes.	1	1
2.	Topographic Map.	2	1
3.	General Arrangement.	3	1
4.	BorLog Details.	4	1
5.	Concrete Outline.	5	1
6.	Reinforcement Details.	6	1
7.	Typical Drawing of Wing Wall.	7	1
8.	Bar Bending Schedule.	8	1
9.	Layout Plan.	9	1
10.	Plan & Profile.	10	1

GENERAL NOTES

a) Bridge Design Specifications

IRC Standard Specifications and Code of Practice for Road Bridges - All Relevant Sections.

b) Bridge Design Method

Limit State method.

c) Live Load

IRC Class A and IRC Class 70R, Tracked and Wheeled vehicles. Load combinations are adopted as per IRC:6-2017, Section: II, Loads and Load Combinations.

Pedestrian Load: 4kN/m².

d) Concrete

Concrete Class for box, Approach Slab and Safety Kerb is M25.

e) Steel Reinforcement

Reinforcing Steel shall be HYSD bars of grade Fe 500 confirming to IS: 1786-2008.

f) Lap Length

Minimum Lap Length is 65xdiameter of steel reinforcement.

Laps shall be in staggered position.

Lapped bars more tha 50% shall not be allowed.

g) Clear covers

Top Slab

The clear cover to steel reinforcement is 40mm.

Side Wall and Base Slab

The clear cover to steel reinforcement steel is 75mm.

Approach Slab

The clear cover to steel reinforcement steel is 40mm.

Safety Kerb

The clear cover to steel reinforcement steel is 25mm.

h) All dimensions are in millimeters except otherwise mentioned.

Government of Nepal Ministry of Physical Infrastructure and Transport **Department of Roads** **Project Directorate Office (ADB)** **SASEC Highway Improvement Project-** **Project Preparatory Consultant (SHIP-PPC)** **ADB Loan No: 3722-NEP**	**CONSULTANT:** Soosung Engineering Co. Ltd, Korea in association with ERMC P (Ltd) and TE-Tech Studio of Engineeering Nepal	**IMPLEMENTING AGENCY:** **DOR, DCID** **ROAD NAME:** **East West Highway (H01)** **Butwal - Gorusinghe Section**	**SHEET TITLE:** General Notes of **Soila Box Bridge- (6 X 3)** (46/H001/294_A,B) CH-597+459	**SCALE:** As Shown		**NAME**	**SIGNATURE**	**REV NO.**	**DESCRIPTION**	**DATE:** Nov,2022
					Designed by:	P.Shrestha				**DWG.NO.:** 294_Soila
					Checked by:	P. Upadhyaya				
					Approved by:	Dr. T.H.Choi				**SHEET NO.:** 01/10

Government of Nepal Ministry of Physical Infrastructure and Transport **Department of Roads** **Project Directorate Office (ADB)** **SASEC Highway Improvement Project-** **Project Preparatory Consultant (SHIP-PPC)** **ADB Loan No: 3722-NEP**	**CONSULTANT:** Soosung Engineering Co. Ltd, Korea in association with ERMC P (Ltd) and TSC-Tech Studio of Engineeering Nepal	**IMPLEMENTING AGENCY:** **DOR, DCID** **ROAD NAME:** **East West Highway (H01)** **Butwal - Gorusinghe Section**	**SHEET TITLE:** Topographic Map of **Soila Box Bridge- (6 X 3)** (46/H001/294_A,B) CH-597+459	**SCALE:** 2:1		**NAME**	**SIGNATURE**	**REV NO.**	**DESCRIPTION**	**DATE:** Nov,2022
					Designed by:	P.Shrestha				**DWG.NO.:** 294_Soila
					Checked by:	P. Upadhyaya				
					Approved by:	Dr. T.H.Choi				**SHEET NO.:** 02/10

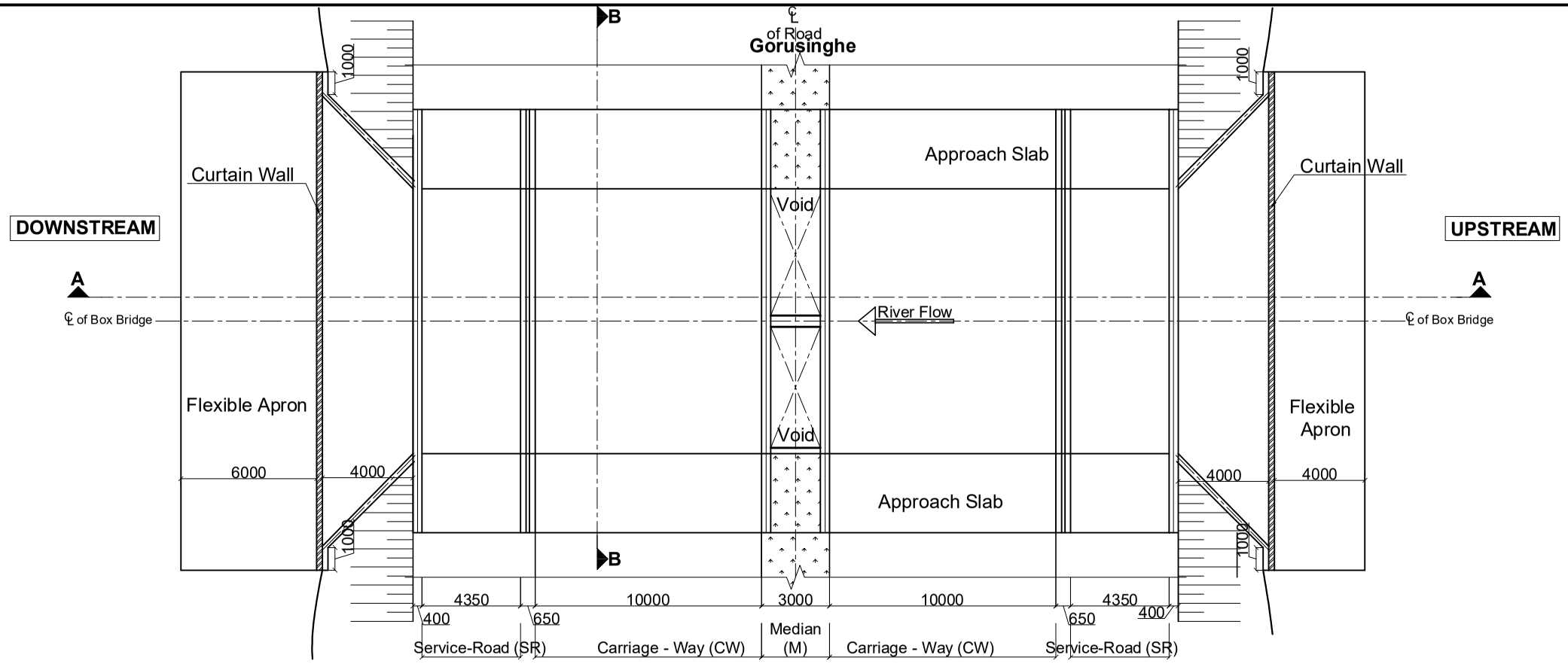

Plan
Scale:-1:250

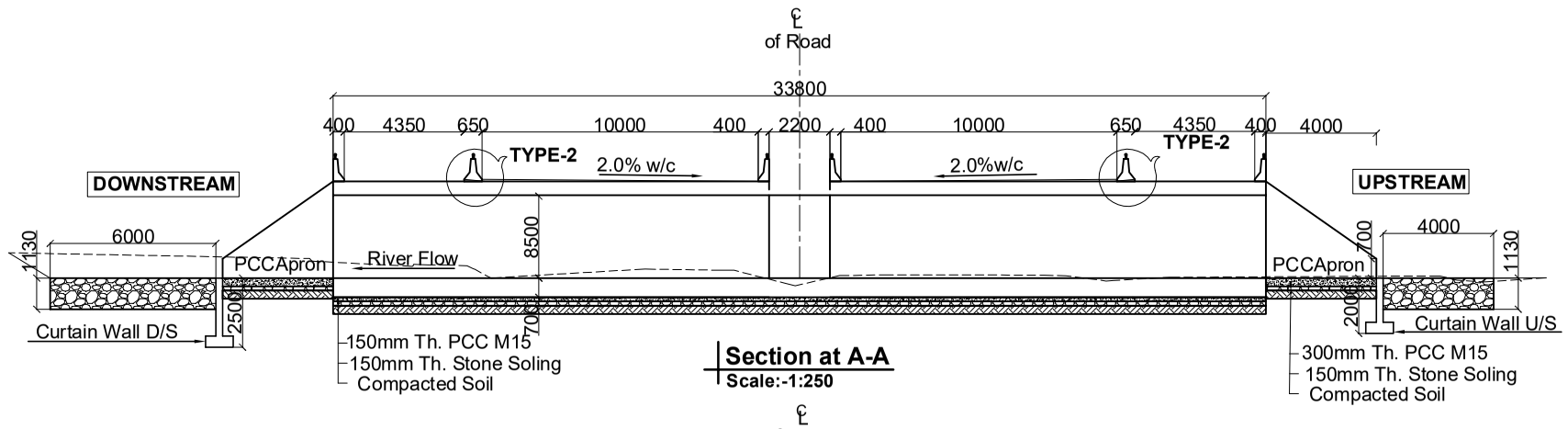

Section at A-A
Scale:-1:250

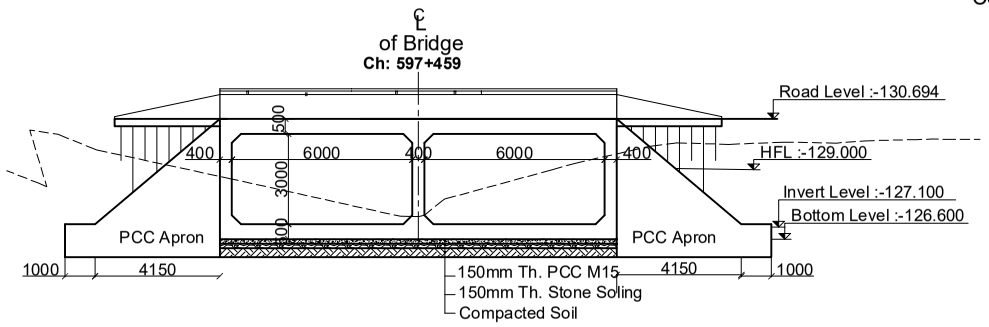

Section at B-B
Scale: 1:200

	Name(NMC Number)	Signature
P. Engineer	P. Upadhyaya (Civil A 675)	
Structure Engineer	K.P.Wagle(Civil A 127) / P.Shrestha(Civil A 676) / S.Bhattarai (Civil A 904)	
Hydrologist	Dr. P.C. Jha(Civil A 166) / S. Adhikari (Civil A 408)	
Geotechnical Engineer	A. Adhikari(ka 199) / Dr. V . R. S. Shahi	

Government of Nepal Ministry of Physical Infrastructure and Transport **Department of Roads** **Project Directorate Office (ADB)** **SASEC Highway Improvement Project-** **Project Preparatory Consultant (SHIP-PPC)** **ADB Loan No: 3722-NEP**	**CONSULTANT:** Soosung Engineering Co. Ltd, Korea in association with ERMC P (Ltd) and TSE-Tech Studio of Engineeering Nepal	**IMPLEMENTING AGENCY:** **DOR, DCID** **ROAD NAME:** **East West Highway (H01)** **Butwal - Gorusinghe Section**	**SHEET TITLE:** General Arrangement of **Soila Box Bridge- (6 X 3)** (46/H001/294_A,B) CH-597+459	**SCALE:** As Shown		**NAME**	**SIGNATURE**	**REV NO.**	**DESCRIPTION**	**DATE:** Nov,2022
					Designed by:	P.Shrestha				**DWG.NO.:** 294_Soila
					Checked by:	P. Upadhyaya				
					Approved by:	Dr. T.H.Choi				**SHEET NO.:** 03/10

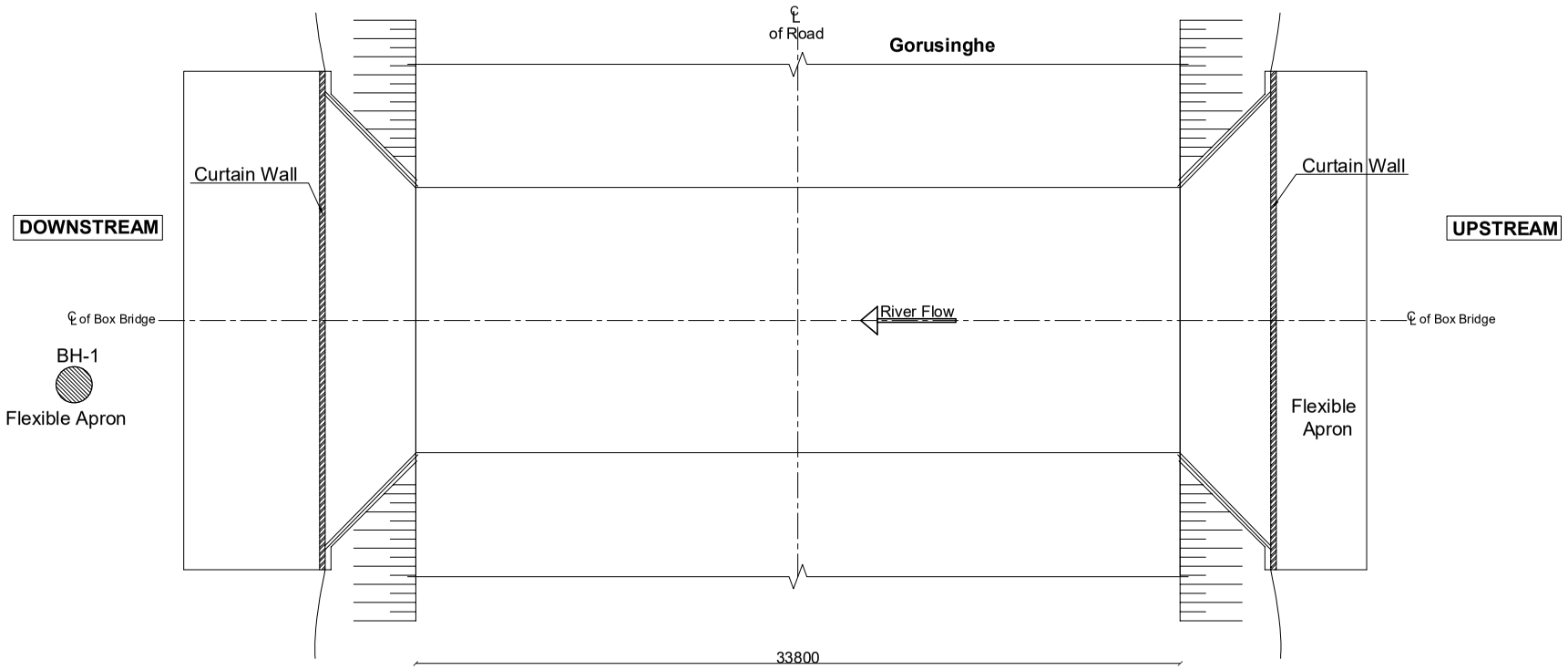

Bor Log Details Butwal
Scale:-1:300

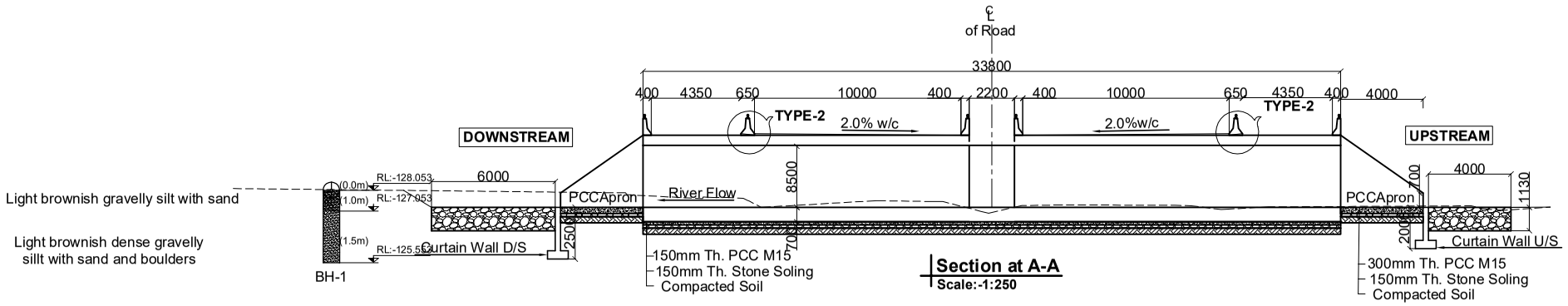

Section at A-A
Scale:-1:250

Bor Log Details
Scale:-1:300

	Name(NMC Number)	Signature
P. Engineer	P. Upadhyaya (Civil A 675)	
Structure Engineer	K.P.Wagle(Civil A 127) / P.Shrestha(Civil A 676) / S.Bhattarai (Civil A 904)	
Hydrologist	Dr. P.C. Jha(Civil A 166) / S. Adhikari (Civil A 408)	
Geotechnical Engineer	A. Adhikari(ka 199) / Dr. V . R. S. Shahi	

Government of Nepal Ministry of Physical Infrastructure and Transport **Department of Roads** **Project Directorate Office (ADB)** **SASEC Highway Improvement Project-** **Project Preparatory Consultant (SHIP-PPC)** **ADB Loan No: 3722-NEP**	**CONSULTANT:** Soosung Engineering Co. Ltd, Korea in association with ERMC P (Ltd) and TPE-Tech Studio of Engineeering Nepal	**IMPLEMENTING AGENCY:** **DOR, DCID** **ROAD NAME:** **East West Highway (H01)** **Butwal - Gorusinghe Section**	**SHEET TITLE:** BorLog Details of **Soila Box Bridge- (6 X 3)** (46/H001/294_A,B) CH-597+459	**SCALE:** As Shown		**NAME**	**SIGNATURE**	**REV NO.**	**DESCRIPTION**	**DATE:** Nov,2022 **DWG.NO.:** 294_Soila **SHEET NO.:** 04/10
					Designed by:	P.Shrestha				
					Checked by:	P. Upadhyaya				
					Approved by:	Dr. T.H.Choi				

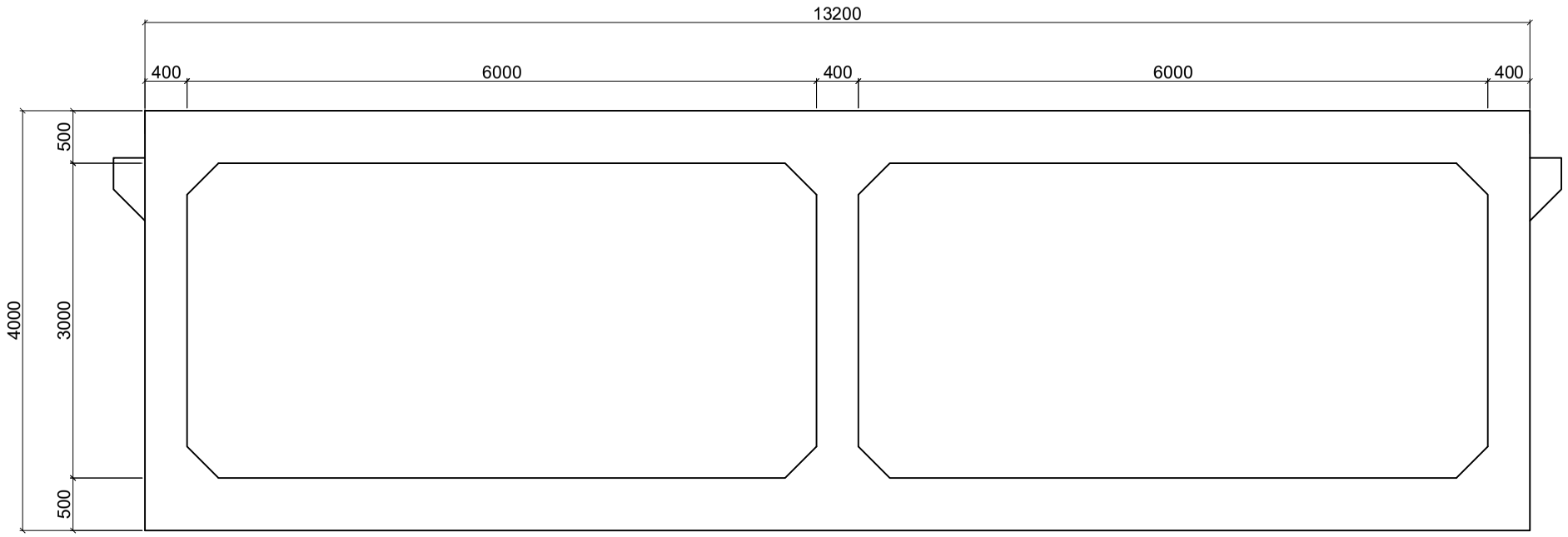

Concrete Outlines (Sectional Elevation)
Scale:-1:60

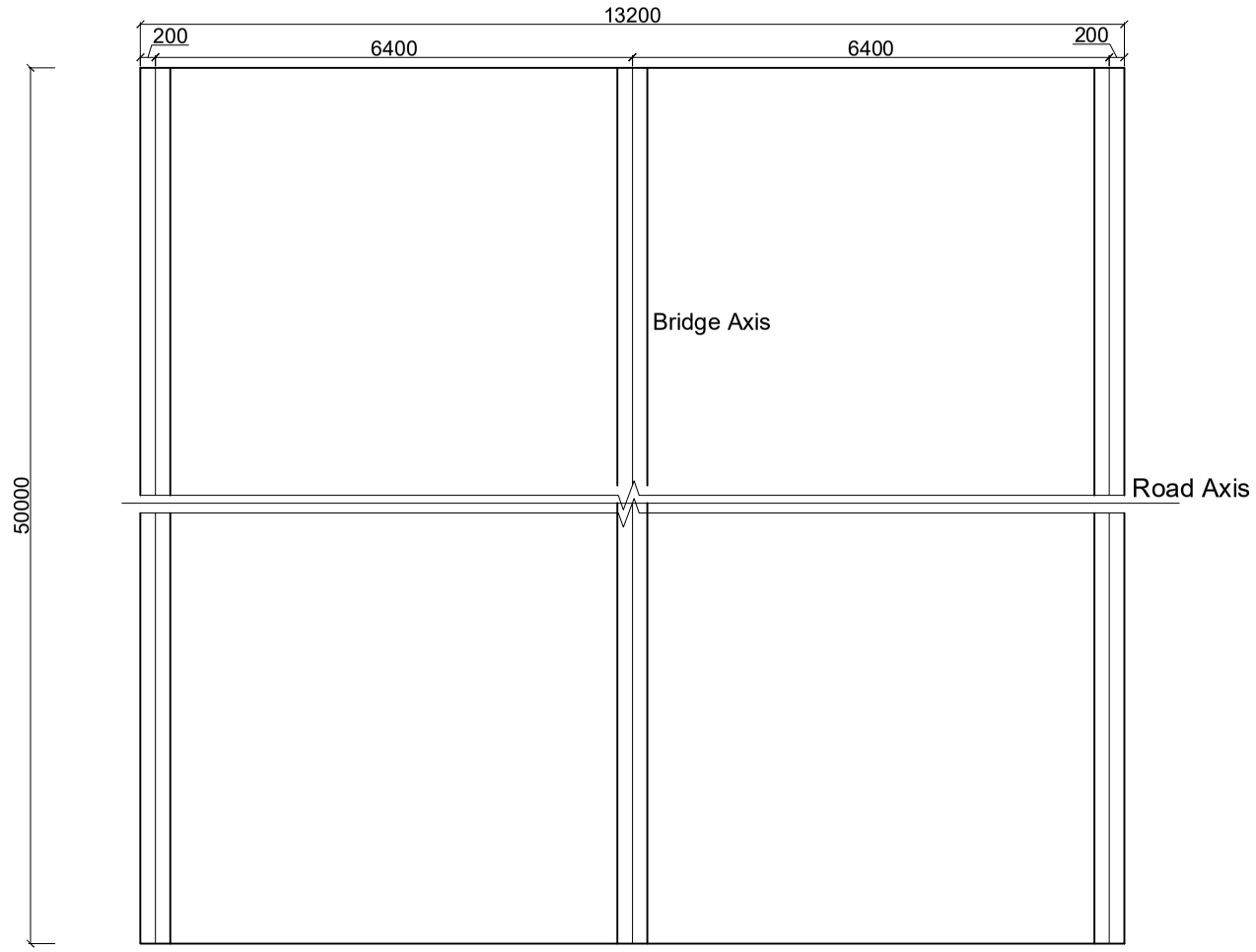

Concrete Outlines (Plan)
Scale:-1:100

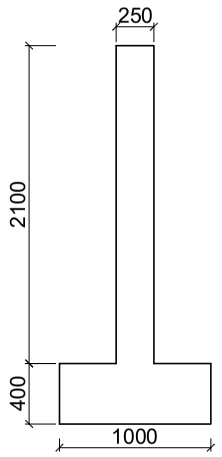

Curtain Wall D/S
Scale:-1:50

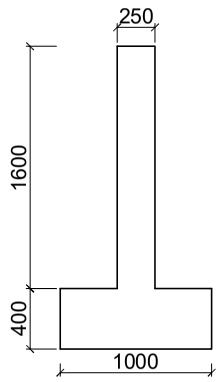

Curtain Wall U/S
Scale:-1:50

Government of Nepal Ministry of Physical Infrastructure and Transport **Department of Roads** **Project Directorate Office (ADB)** **SASEC Highway Improvement Project-** **Project Preparatory Consultant (SHIP-PPC)** **ADB Loan No: 3722-NEP**	**CONSULTANT:** Soosung Engineering Co. Ltd, Korea in association with ERMC P (Ltd) and TTE-Tech Studio of Engineeering Nepal	**IMPLEMENTING AGENCY:** **DOR, DCID** **ROAD NAME:** **East West Highway (H01)** **Butwal - Gorusinghe Section**	**SHEET TITLE:** Concrete Outline of **Soila Box Bridge- (6 X 3)** (46/H001/294_A,B) CH-597+459	**SCALE:** As Shown		**NAME**	**SIGNATURE**	**REV NO.**	**DESCRIPTION**	**DATE:** Nov,2022
					Designed by:	P.Shrestha				**DWG.NO.:** 294_Soila
					Checked by:	P. Upadhyaya				
					Approved by:	Dr. T.H.Choi				**SHEET NO.:** 05/10

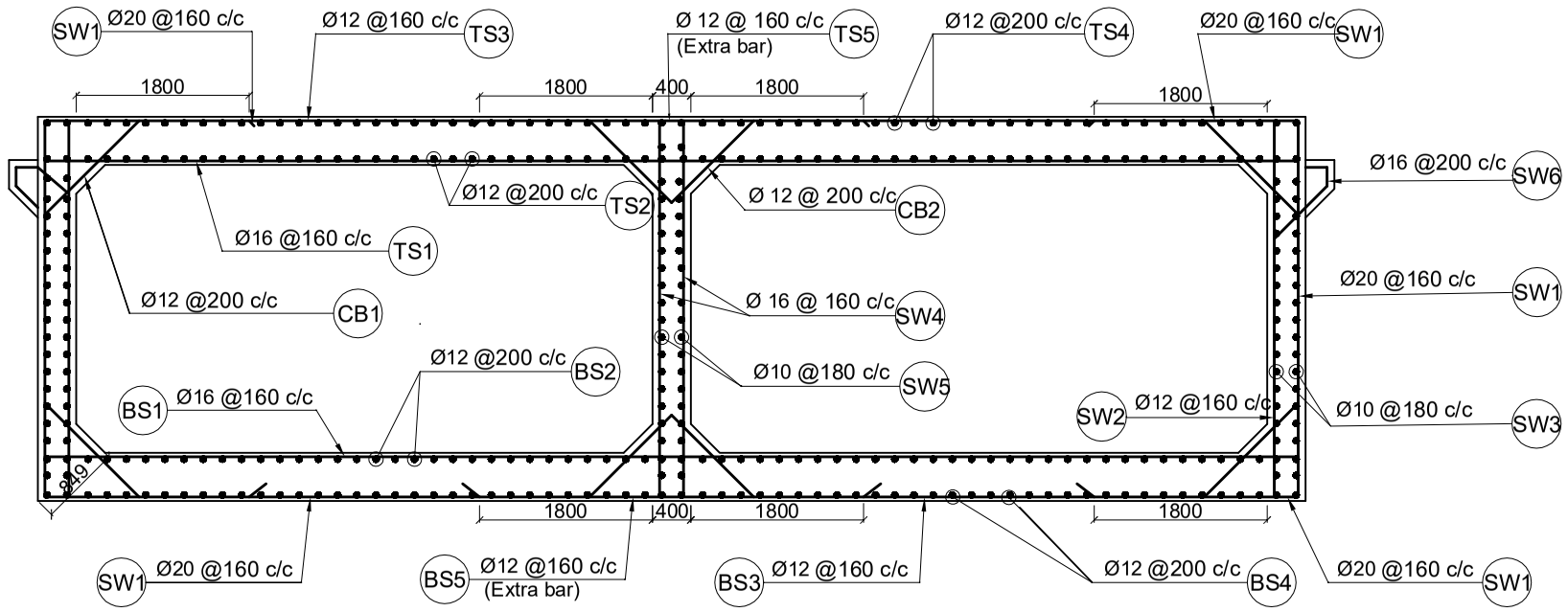

Sectional Elevation
Scale:-1:75

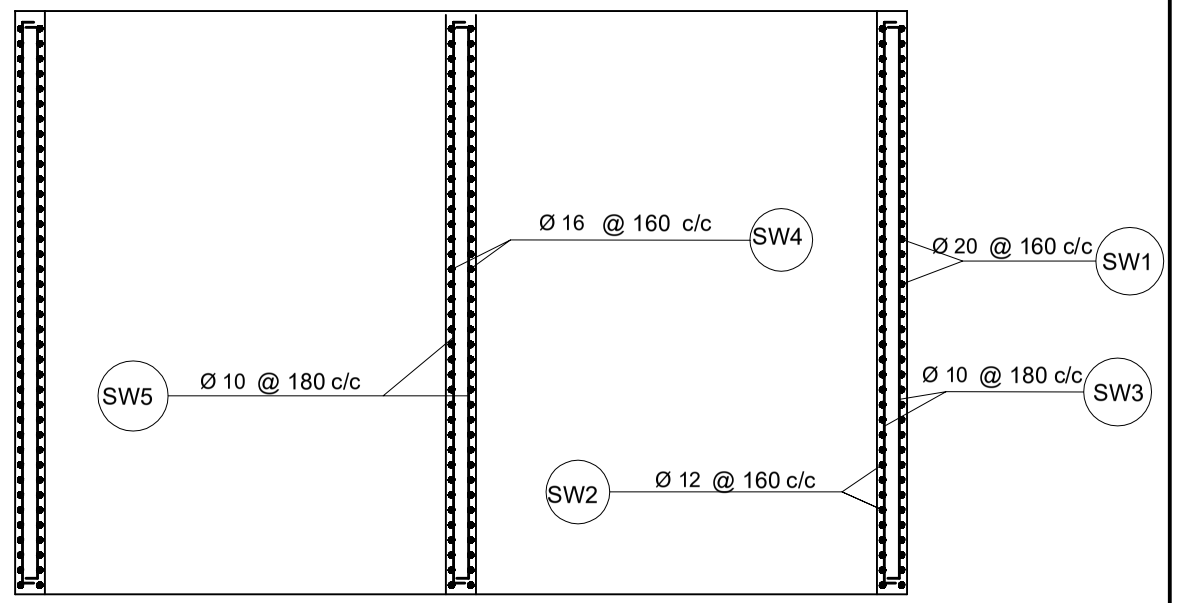

Sectional Plan of Vertical Wall
Scale:-1:75

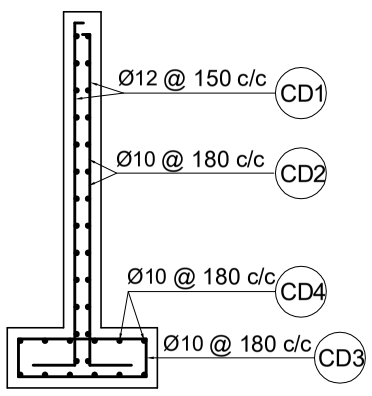

Downstream
Scale:-1:50

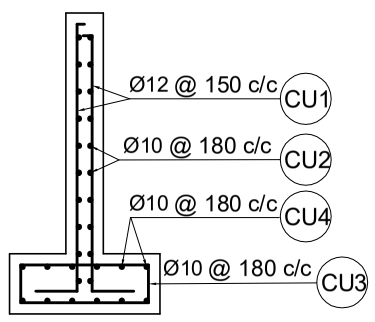

Upstream
Scale:-1:50

CURTAIN WALLS
Scale:-1:50

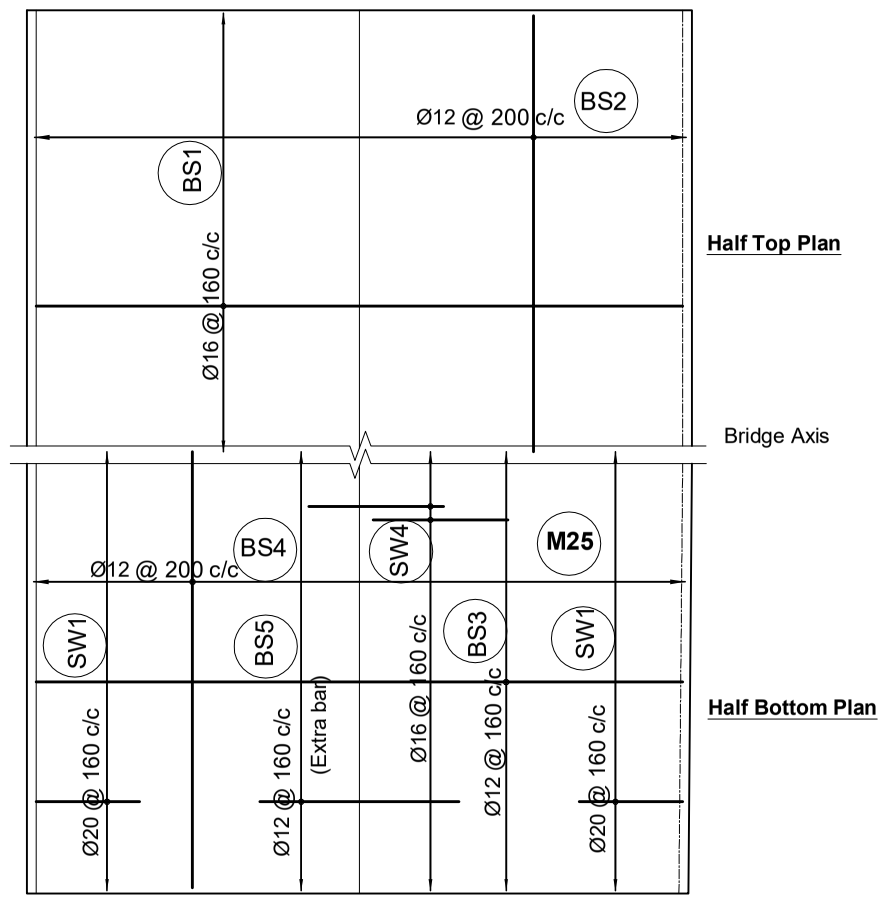

Bottom Sectional Plan
Scale:-1:100

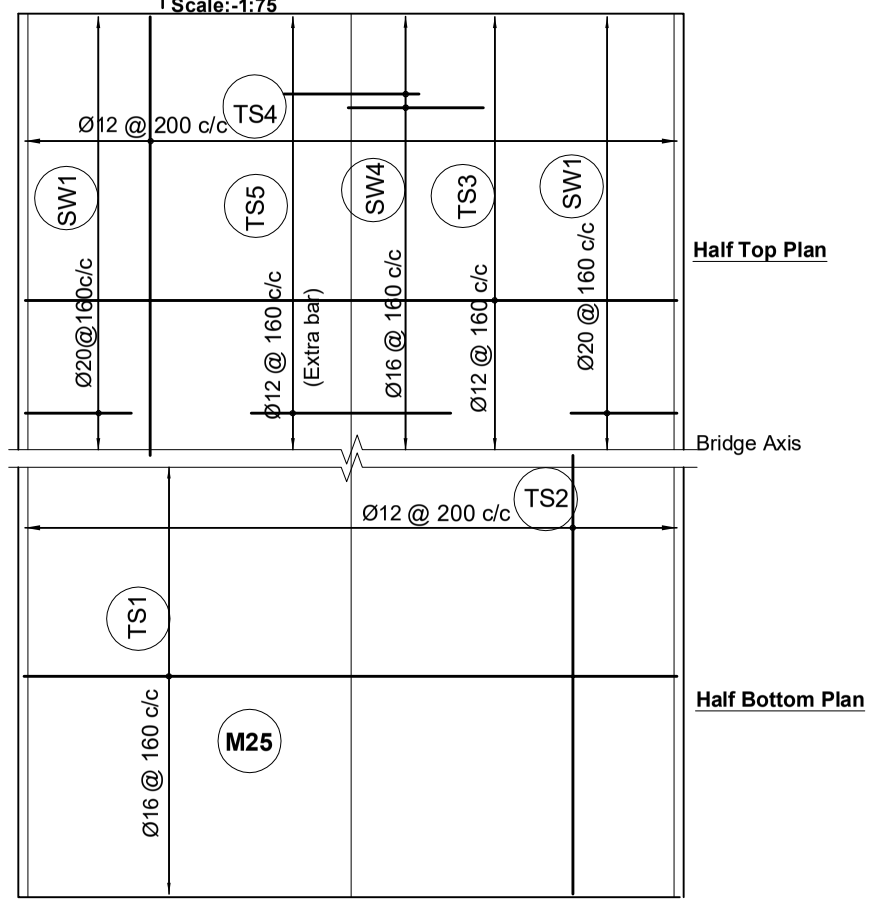

Top Sectional Plan
Scale:-1:100

Government of Nepal Ministry of Physical Infrastructure and Transport **Department of Roads** **Project Directorate Office (ADB)** **SASEC Highway Improvement Project-** **Project Preparatory Consultant (SHIP-PPC)** **ADB Loan No: 3722-NEP**	**CONSULTANT:** Soosung Engineering Co. Ltd, Korea in association with ERMC P (Ltd) and TE-Tech Studio of Engineeering Nepal	**IMPLEMENTING AGENCY:** **DOR, DCID** **ROAD NAME:** **East West Highway (H01)** **Butwal - Gorusinghe Section**	**SHEET TITLE:** Reinforcement Details of **Soila Box Bridge- (6 X 3)** (46/H001/294_A,B) CH-597+459	**SCALE:** As Shown		**NAME**	**SIGNATURE**	**REV NO.**	**DESCRIPTION**	**DATE:** Nov,2022 **DWG.NO.:** 294_Soila **SHEET NO.:** 06/10
					Designed by:	P.Shrestha				
					Checked by:	P. Upadhyaya				
					Approved by:	Dr. T.H.Choi				

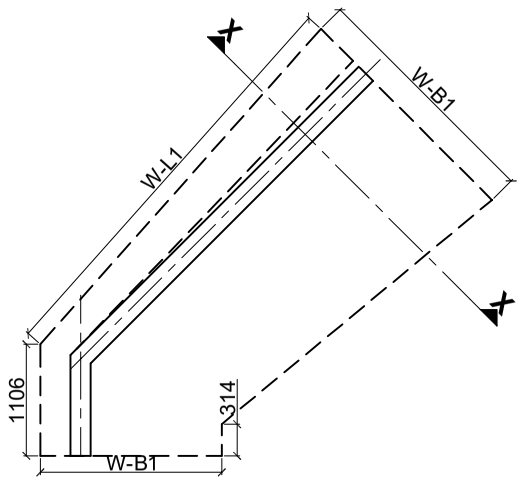

Wing Wall Plan
Scale:-1:75

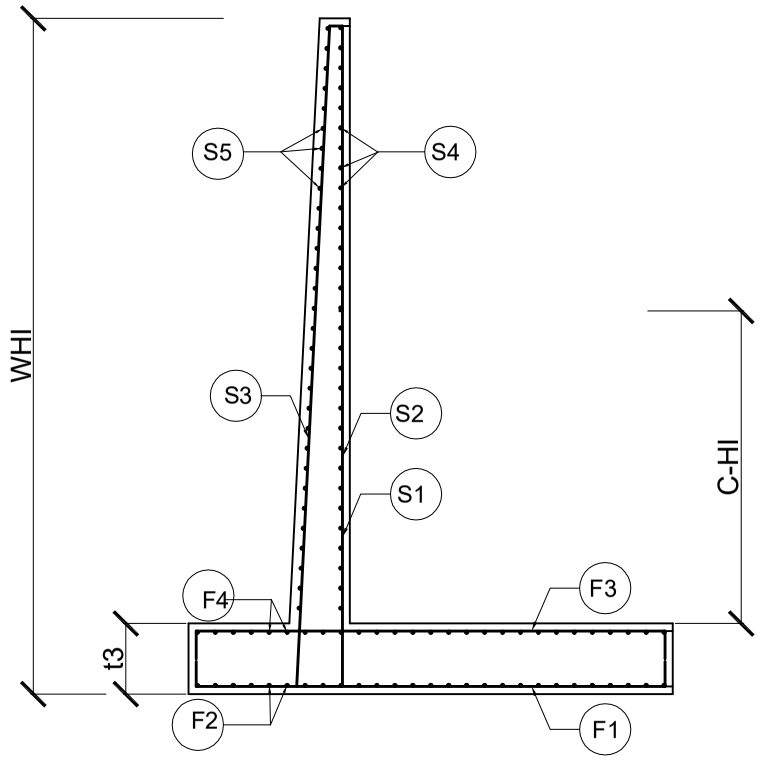

Section at X -X
Scale:-1:75

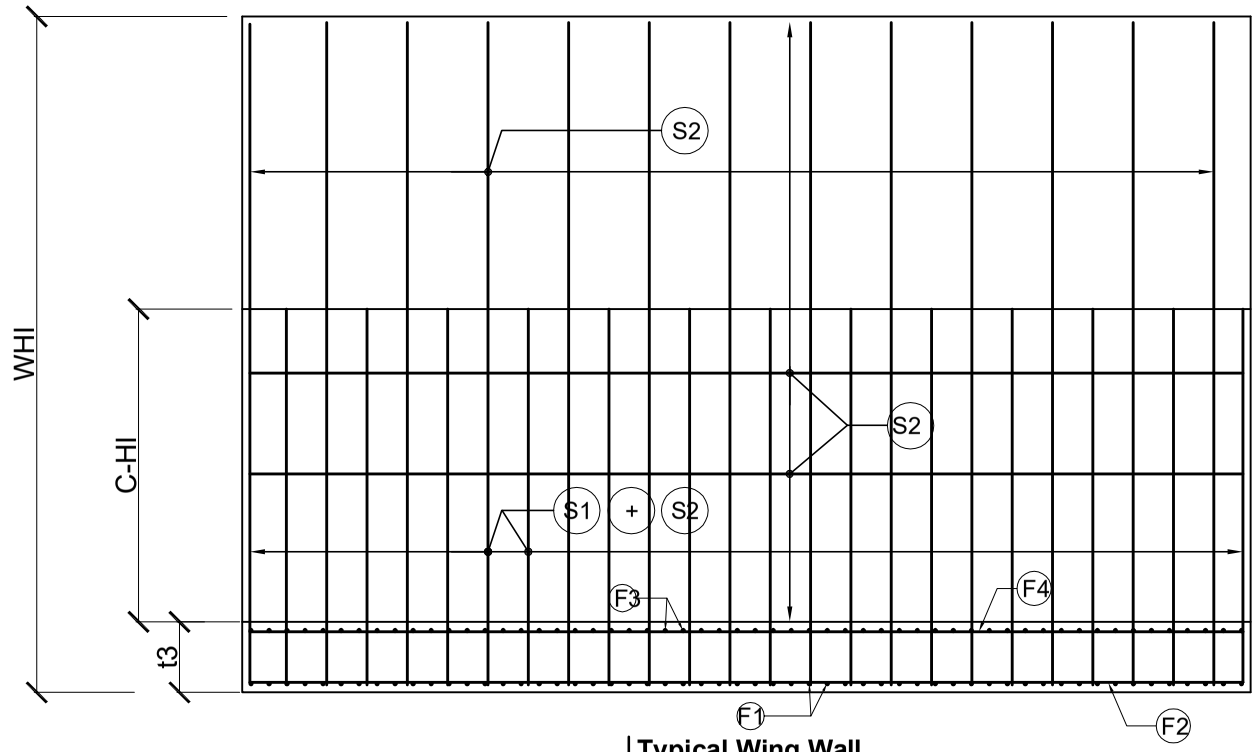

Typical Wing Wall
Scale:-1:75

S.No.	W-H1(m)	W-L1 Length	W-B1	W-B2	t1	t2	t3	x	y
1.	2.00	4300	1800	1800	200	200	200	300	1300
2.	2.50	4300	2200	1800	200	240	200	300	1660
3.	3.00	4300	2400	1800	200	280	250	450	1670
4.	3.50	500	2800	1800	200	300	250	450	2050
5.	4.00	5700	3200	1800	250	350	300	500	2350
6.	4.50	6000	3500	1800	250	400	350	500	2600
7.	5.00	6500	4000	1800	300	500	500	800	2700
8.	6.00	7000	4800	1800	300	600	700	1000	3200

REINFORCEMENT DETAIL OF WING WALL

HEIGHT W-H1	Curtailment Height C-H1	F1		F2		F3		F4		S1		S2		S3		S4		S5		Remarks
		Diameter	Spacing	Diameter	Spacing	Diameter	Spacing	Diameter	Spacing	Diameter	Spacing	Diameter	Spacing	Diameter	Spacing	Diameter	Spacing	Diameter	Spacing	
m	m	mm	mm	mm	mm	mm	mm	mm	mm	mm	mm	mm	mm	mm	mm	mm	mm	mm	mm	
2.0		8	230	8	230	12	200	8	230	12	100			10	200	8	230	8	230	
2.5		8	230	8	230	12	160	8	230	16	160			10	160	8	230	8	230	
3.0	1.60	10	230	8	230	12	140	8	230	12	180	12	180	10	180	8	230	8	230	
3.5	1.55	10	230	8	230	16	160	10	230	16	200	16	200	12	200	8	230	8	230	
4.0	1.65	10	230	10	300	16	150	10	230	16	200	16	200	12	200	10	230	10	230	
4.5	2.10	10	230	10	300	16	140	10	230	16	200	16	200	12	150	10	230	10	230	
5.0	2.45	12	220	10	250	12	150	10	250	16	180	16	180	12	160	10	230	10	230	
6.0	3.10	12	180	10	180	12	150	10	180	20	200	20	200	12	120	10	160	10	160	

Government of Nepal
Ministry of Physical Infrastructure and Transport
Department of Roads
Project Directorate Office (ADB)
SASEC Highway Improvement Project-
Project Preparatory Consultant (SHIP-PPC)
ADB Loan No: 3722-NEP

CONSULTANT: Soosung Engineering Co. Ltd, Korea
in association with
ERMC P (Ltd)
and
TTE-Tech Studio of Engineeering Nepal

IMPLEMENTING AGENCY: DOR, DCID

ROAD NAME: East West Highway (H01)

Butwal - Gorusinghe Section

SHEET TITLE: Typical Drawing of Wing Wall of Soila Box Bridge- (6 X 3) (46/H001/294_A,B) CH-597+459

SCALE: As Shown

	NAME	SIGNATURE	REV NO.	DESCRIPTION
Designed by:	P.Shrestha			
Checked by:	P. Upadhyaya			
Approved by:	Dr. T.H.Choi			

DATE: Nov,2022
DWG.NO.: 294_Soila
SHEET NO.: 07/10

Bar Bending Schedule of Top Slab

Sketch	Spacing (mm)	Bar Mark	Ø, mm	No	Lot	Length, m	Total Length, m	Weight Kg/m	Total wt. Kg
Top Slab									
100 13120 100	160	TS1	16	200	1	13.320000	2664.00	1.58	4209.78
100 15720 100	200	TS2	12	134	1	15.92	2133.28	0.89	1896.25
100 13120 100	160	TS3	12	200	1	13.32	2664.00	0.89	2368.00
100 15720 100	200	TS4	12	134	1	15.92	2133.28	0.89	1896.25
50 4000 50	160	TS5	12	200	1	4.10	820.00	0.89	728.89
								Sub-Total (Top Slab) =	11099.2
Base Slab									
100 13050 100	160	BS1	16	212	1	13.25	2809.00	1.58	4438.91
100 33650 100	200	BS2	12	67	1	33.85	2267.95	0.89	2015.96
100 13050 100	160	BS3	12	212	1	13.25	2809.00	0.89	2496.89
100 33650 100	200	BS4	12	67	1	33.85	2267.95	0.89	2015.96
50 4000 50	160	BS5	12	424	1	4.10	1738.40	0.89	1545.24
									0.0
								Sub-Total (Base Slab) =	12513.0

Bar Bending Schedule of Wing Wall

Sketch	Spacing (mm)	Bar Mark	Ø, mm	No	Lot	Length, m	Total Length, m	Weight Kg/m	Total wt. Kg
1040 to 2190; 650	200	S1	16	34	4	2.26	77.07	1.58	121.78
100; 1890 to 4190; 650	200	S2	16	34	4	3.79	129.24	1.58	204.23
100; 1890 to 4190; 650	200	S3	12	34	4	3.79	129.24	0.89	114.88
6620	250	S4	10	13	4	6.62	86.06	0.62	53.12
6620	250	S5	10	13	4	6.62	86.06	0.62	53.12
100 1690 to 3090 100	250	F1	12	27	4	2.59	71.17	0.89	63.27
6620	250	F2	10	11	4	6.62	72.82	0.62	44.95
100 1690 to 3090 100	250	F3	12	27	4	2.59	71.17	0.89	63.27
6620	250	F4	10	11	4	6.62	72.82	0.62	44.95
								Sub-Total (Base Slab) =	763.6

Bar Bending Schedule of Curtain Walls

Sketch	Spacing (mm)	Bar Mark	Ø, mm	No	Lot	Length, m	Total Length, m	Weight Kg/m	Total wt. Kg
Downstream									
300 2350	150	CD1	12	294	1	2.65	779.10	0.89	692.53
100 21850	180	CD2	10	15	1	43.90	658.50	0.62	406.48
850 250	180	CD3	10	123	1	2.20	270.60	0.62	167.04
21850	180	CD4	10	12	1	21.85	262.20	0.62	161.85
								Sub-Total (Downstream) =	1427.9
Upstream									
300 1850	150	CU1	12	294	1	2.15	632.10	0.89	561.87
100 21850	180	CU2	10	12	1	43.90	526.80	0.62	325.19
850 250	180	CU3	10	123	1	2.20	270.60	0.62	167.04
21850	180	CU4	10	12	1	21.85	262.20	0.62	161.85
								Sub-Total (Upstream) =	1215.9

Bar Bending Schedule of Side Walls

Sketch	spacing (mm)	Bar Mark	Ø, mm	No	Lot	Length, m	Total Length, m	Weight Kg/m	Total wt. Kg
3885 2175 2175	160	SW1	20	424	1	8.24	3491.64	2.47	8621.33
3885 150 150	160	SW2	12	424	1	4.19	1774.44	0.89	1577.28
300 33650 300	180	SW3	10	34	1	67.90	2308.60	0.62	1425.06
3885 2175 2175	160	SW4	16	424	1	8.24	3491.64	1.58	5517.65
300 33650 300	180	SW5	10	17	1	67.90	1154.30	0.62	712.53
200 550 300 778	200	SW6	16	340	1	1.83	621.52	1.58	982.16
1535	200	CB 1	12	680	1	1.54	1043.80	0.89	927.82
1535 1535	200	CB 2	12	84	1	3.07	257.88	0.89	229.23
								Sub-Total (Side Walls) =	19993.1

Bar Bending Schedule of Approach Slab

Sketch	Spacing (mm)	Bar Mark	Ø, mm	No	Lot	Length, m	Total Length, m	Weight Kg/m	Total wt. Kg
100 3400 100	150	AS1	12	226	2	3.60	1627.20	0.89	1446.40
100 33700 100	150	AS2	12	24	2	33.90	1649.80	0.89	1466.49
100 3400 100	150	AS3	12	226	2	3.60	1627.20	0.89	1446.40
100 33700 100	150	AS4	12	24	2	33.90	1649.80	0.89	1466.49
								Sub-Total (Approach Slab) =	5825.8

Bar Bending Schedule of Safety Barrier Type - 1

Sketch	Spacing (mm)	Bar Mark	Ø, mm	No	Lot	Length, m	Total Length, m	Weight Kg/m	Total wt. Kg
575 928 225 304	125	C1	16	81	1	2.03	164.59	1.58	260.10
915 500	125	C2	16	81	1	1.42	114.62	1.58	181.12
9960		C3	16	11	1	9.96	109.56	1.58	173.13
								Sub-Total for 10m(Safety Barrier Type - 1) =	614.3
								For 93.2m Length	5725.3

Bar Bending Schedule of Safety Barrier Type - 2

Sketch	Spacing (mm)	Bar Mark	Ø, mm	No	Lot	Length, m	Total Length, m	Weight Kg/m	Total wt. Kg
575 250 555	150	C1	16	8	1	2.21	17.64	1.58	27.88
915 730	150	C2	16	16	1	1.65	26.32	1.58	41.59
960		C3	16	12	1	0.96	11.52	1.58	18.20
								Sub-Total for 1m(Safety Barrier Type - 2) =	87.7
								For 26.4m Length	2315.3

Government of Nepal
Ministry of Physical Infrastructure and Transport
Department of Roads
Project Directorate Office (ADB)
SASEC Highway Improvement Project-
Project Preparatory Consultant (SHIP-PPC)
ADB Loan No: 3722-NEP

CONSULTANT: Soosung Engineering Co. Ltd, Korea
in association with
ERMC P (Ltd)
and
TTE-Tech Studio of Engineeering Nepal

IMPLEMENTING AGENCY: DOR, DCID

ROAD NAME: East West Highway (H01)

Butwal - Gorusinghe Section

SHEET TITLE: Bar Bending Schedule of **Soila Box Bridge- (6 X 3)** (46/H001/294_A,B) CH-597+459

SCALE: As Shown

	NAME	SIGNATURE	REV NO.	DESCRIPTION
Designed by:	P.Shrestha			
Checked by:	P. Upadhyaya			
Approved by:	Dr. T.H.Choi			

DATE: Nov,2022

DWG.NO.: 294_Soila

SHEET NO.: 08/10

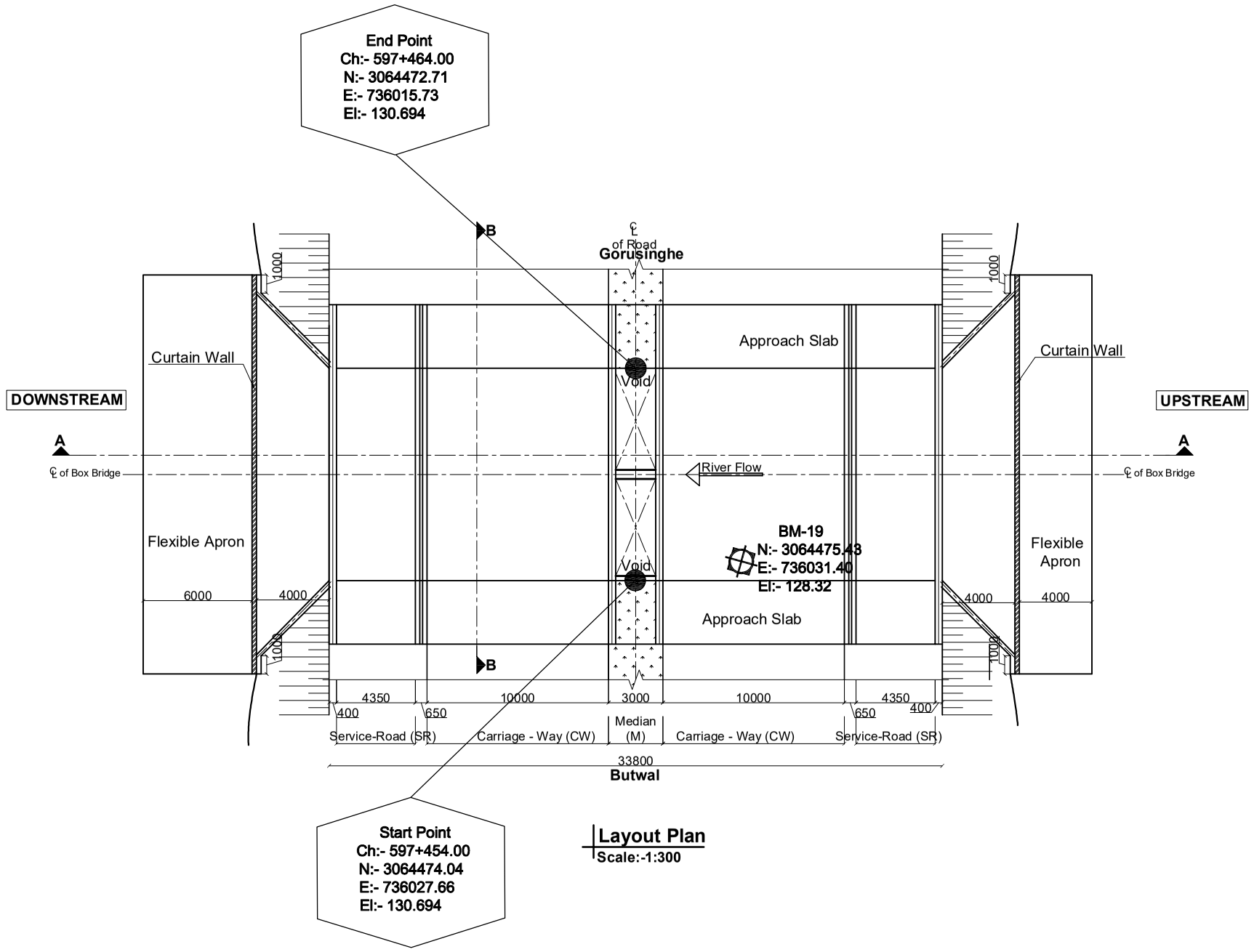

Layout Plan
Scale:-1:300

Government of Nepal Ministry of Physical Infrastructure and Transport **Department of Roads** **Project Directorate Office (ADB)** **SASEC Highway Improvement Project-** **Project Preparatory Consultant (SHIP-PPC)** **ADB Loan No: 3722-NEP**	**CONSULTANT:** Soosung Engineering Co. Ltd, Korea in association with ERMC P (Ltd) and TSC-Tech Studio of Engineeering Nepal	**IMPLEMENTING AGENCY:** **DOR, DCID** **ROAD NAME:** **East West Highway (H01)** **Butwal - Gorusinghe Section**	**SHEET TITLE:** Layout Plan of **Soila Box Bridge- (6 X 3)** (46/H001/294_A,B) CH-597+459	**SCALE:** As Shown		**NAME**	**SIGNATURE**	**REV NO.**	**DESCRIPTION**	**DATE:** Nov,2022 **DWG.NO.:** 294_Soila **SHEET NO.:** 09/10
					Designed by:	P.Shrestha				
					Checked by:	P. Upadhyaya				
					Approved by:	Dr. T.H.Choi				

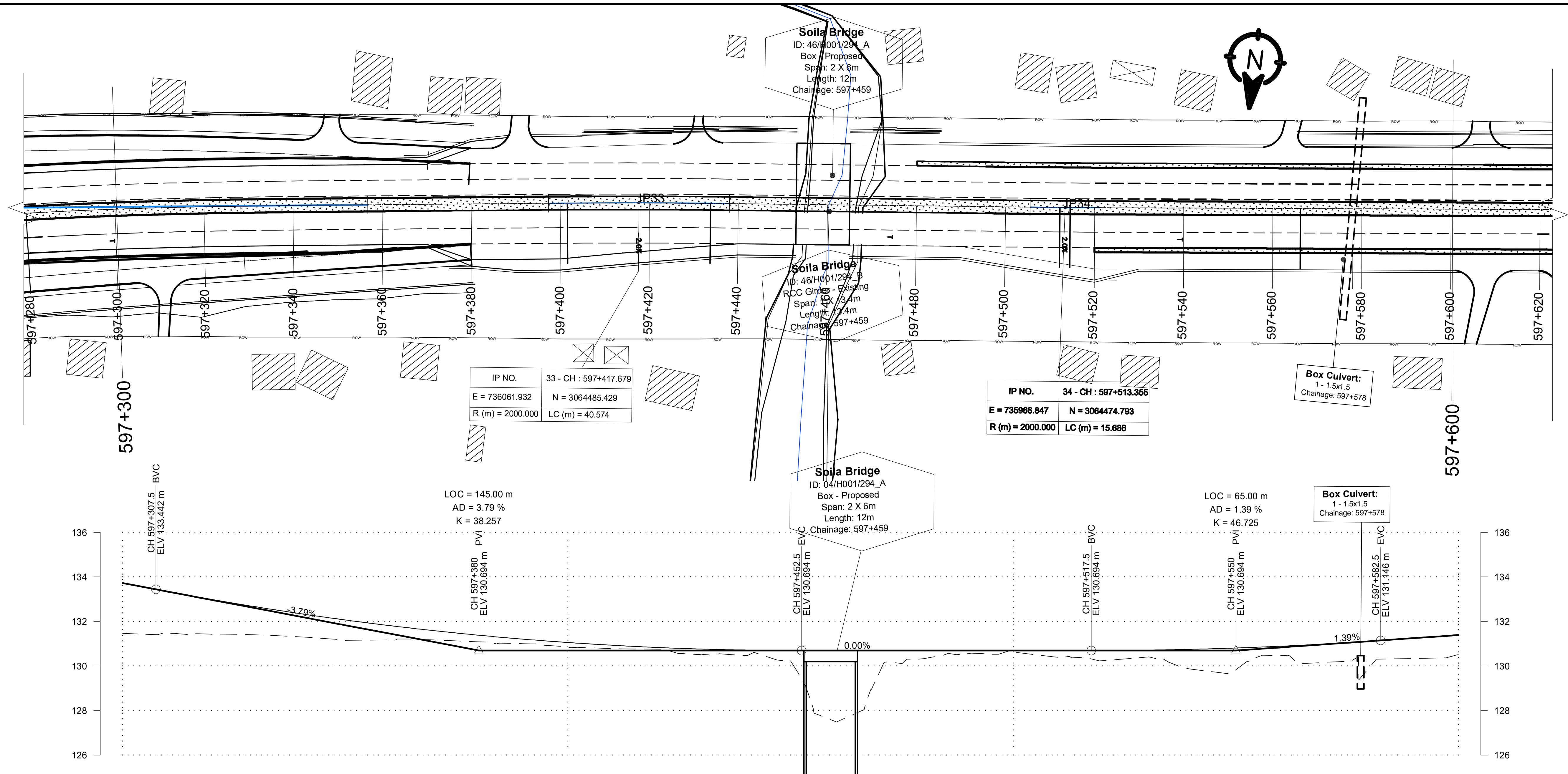

CHAINAGE(Km)	DESIGN LEVEL(m)	EXISTING LEVEL(m)
597+300	133.726	131.462
597+310	133.348	131.461
597+320	132.989	131.421
597+330	132.655	131.395
597+340	132.348	131.307
597+350	132.067	131.149
597+360	131.812	131.159
597+370	131.584	131.165
597+380	131.381	131.087
597+390	131.205	131.003
597+400	131.054	130.840
597+410	130.930	130.778
597+420	130.832	130.755
597+430	130.760	130.499
597+440	130.714	130.466
597+450	130.695	130.229
597+460	130.694	127.509
597+470	130.694	129.735
597+480	130.694	130.334
597+490	130.694	130.560
597+500	130.694	130.623
597+510	130.694	130.389
597+520	130.695	130.237
597+530	130.711	130.398
597+540	130.748	129.861
597+550	130.807	129.832
597+560	130.887	130.471
597+570	130.989	130.161
597+580	131.112	129.944
597+590	131.250	130.337
597+600	131.390	130.504

HORIZONTAL ALIGNMENT (RIGHT / LEFT): IP-32 R=500.00; IP-33 R=2000.00; IP-34 R=2000.00

SUPER ELEVATION: 597+300; T; 597+401.591; -2; 597+433.765; T; 597+512.198; 2; 597+514.512; T; 597+566.198; NC; 597+600

Government of Nepal Ministry of Physical Infrastructure and Transport **Department of Roads** **Project Directorate Office (ADB)** **SASEC Highway Improvement Project-** **Project Preparatory Consultant (SHIP-PPC)** **ADB Loan No: 3722-NEP**	**CONSULTANT:** Soosung Engineering Co. Ltd, Korea in association with ERMC P (Ltd), Nepal and TPE-Tech Studio of Engineeering	**IMPLEMENTING AGENCY:** **DOR, DCID** **ROAD NAME:** **East West Highway (H01)** Butwal - Gorusinghe Section	**SHEET TITLE:** Plan And Profile of Soila Box Bridge CH:597+300 - CH:597+600	**SCALE:** 0 2 4 6m Vertical Scale 0 10 20 30m Horizontal Scale		**NAME**	**SIGNATURE**	**REV NO.**	**DESCRIPTION**
					DESIGNED BY:	S.B. Shrestha			
					CHECKED BY:	P. Upadhyaya			
					APPROVED BY:	Dr. T.H.Choi			

DATE: September, 2022

DWG.NO.: 294_Soila

SHEET NO.: 10/10

Government of Nepal

Ministry of Physical Infrastructure and Transport

Department of Roads

Project Directorate (ADB)

Implementing Agency : DOR, DCID

Project Preparatory Consultants

Under

SASEC Highway Improvement Project (SHIP-PPC)

(ADB Loan No: 3722 Nep)

Contract No. SHIP/PPC/2020/02

Rajpur Bridge(46-H001-295_A)

St. Ch : 597+762.90 ~ End Ch : 597+791.10

Detailed Drawing

Butwal - Gorusinghe Sector

November,2022

CONTENTS

S.No.	DESCRIPTION	DWG. NO	NO. OF SHEETS
1.	General Notes.	1 - 2	2
2.	Topographic Map.	2.1	1
3.	General Arrangement.	3-4	2
4.	Bore Logs.	5	1
5.	Detail of Superstructure.	6	1
6.	Reinforcement Details of Slab.	7	1
7.	Prestressing Details of Main Girder .	8	1
8.	Anchorage Details.	9	1
9.	Untensioned Reinforcement Details of Girder.	10	1
10.	Bar Bending Schedule of Slab & Main Girder.	11	1
11.	Reinforcement Details of Intermediate Cross Girder.	12	1
12.	Reinforcement Details of Cross Girder.	13	1
13.	Plan of Abutment.	14	1
14.	Reinforcement Details of Abutment.	15	1
15.	BBS & Reinforcement Detail.	16	1
16.	Reinforcement Details of Abutment Pile.	17	1
17.	Reinforcement Detail of Approach Slab.	18	1
18.	Miscellaneous Detail.	19-20	2
19.	River Training Work.	21	1
20.	Plan & Profile.	22-23	2
21.	Cross Section.	23.1-23.2	2
22.	Layout Plan.	24-25	2

GENERAL NOTES

General

- Metric system of measurement is used in all drawings. Elevation and Stations are shown in Meter and all other dimensions are in Millimeters, except indicated otherwise.
- In case of contradictions, specific notes on respective sheet shall supersede the General Notes
- No dimensions shall be scaled from the drawings. Only written dimensions shall be followed. Any doubtful matter in the drawings shall be brought to the attention of the engineer-in-charge for any corrections before the execution of the works.

Design Notes

The design codes followed:
For RCC and PSC concrete - IRC:112-2020
For loads and stresses - IRC:6-2017
For substructure and foundations - IRC:78-2014
For seismic design - IRC:SP:114-2018. Seismic zone V. Importance factor 1.2

Design live loads:

For urban area bridges
Case 1 - 3 lanes of class A + pedestrians; 1 lane of class A + 1 lane of class 70R + pedestrians
Case 2 - 4 lanes or class A; 2 lanes of class A + 1 lane of class 70R. No pedestrians
For non-urban area bridges
Case 1 - 2 lanes of class A + pedestrians; 1 lane of class 70R + pedestrians
Case 2 - 3 lanes of class A; 1 lane of class A + 1 lane of class 70R. No pedestrians.

Notes on Concrete

In General the grade of concrete to be used shall be as follows:
(**unless otherwise specified in the respective drawing sheets**)

For superstructure deck slab, wearing course, crash barriers:	M30
For raised footpaths:	M25
For main girders and cross girders of superstructure with PSC girders:	M45
For main girders and cross girders of superstructure with RCC girders:	M30
For substructure: Abutment stem, ballast wall, stoppers, bearing pedestals, pier cap, pier stem and pile caps:	M30
For bored and cast in situ piles:	M35
For leveling course:	M15

The maximum size of aggregate shall be as per IRC:112-2020, clause 18.4.4.2

Admixture to the concrete

To improve workability and/or increase initial setting time of concrete and cement grout, admixture conforming to IS:9103 and ASTM C-494, (Type F - High Range Water Reducing admixture) can be added in appropriate dosage, subject to their satisfactory proven use.

Clear Cover to reinforcement (unless otherwise specified in the respective drawing sheets)

Reinforcement bars of all components of the superstructure:	40mm
Prestressing ducts or strands in superstructure:	75mm
All components of abutment, pier, pile caps and piles (except stoppers and bearing pedestals):	75mm
Bearing pedestals and Stoppers:	50mm

Cover shall be ensured with the use of properly sized cement concrete blocks which can be secured to the re-bars or other devices approved by the engineer-in-charge. Use of loose stones or wooden pieces is not permitted.

Notes on Reinforcement

- All reinforcing steel bars shall be High Strength Deformed bars with grade Fe500 conforming to IS:1786
- Laps and Splices shall conform to IRC:112-2020, Clause 15.2.5. Use of mechanical coupler is permitted upon approval by the engineer.

Notes on Prestressing

- Prestressing strands shall be Class-2, uncoated 7 ply, low relaxation type with ultimate tensile stress 1862 N/mm², conforming to IS:14268.
- The diameter of strands, their number in a tendon and the total jacking force to be applied is specified in the respective drawing sheet. All the initial and long term losses are already incorporated in design.
- Corrugated HDPE Sheathing ducts shall be used with the minimum internal diameter not less than three times the cross sectional area of the tendon. The wall thickness and other properties of the sheathing shall be as per IRC:112-2020, clause 13.4.3
- The specified profile and the alignment of the ducts shall be strictly maintained by properly securing the ducts to the re-bars. If required, pieces of re-bars can be added or the re-bars slightly repositioned or bent to maintain the profile and alignment, with approval of the engineer-in-charge.
- The jacking equipment shall be fitted with appropriate force measuring device and shall be regularly checked and calibrated as prescribed by the manufacturer.
- Jacking shall be done from both ends simultaneously and gradually, recording the elongation both sides. The expected final elongation mentioned in the respective drawings sheet is based on modulus of elasticity of the strands (Es) equal to 1.95x10^5 MPa. If the Es of supplied strands is different then the elongation values shall be recalculated by multiplying the Design values of elongation by the ratio of Design Es / Actual Es.
- In case the total elongation is not achieved at the prescribed jacking force, the jacking operation can be continued until the force reaches the maximum allowable value. If the required elongation is achieved at jacking force lower than the prescribed value, the jacking operation shall continue until the prescribed force is reached, provided the Sum of the additional elongations thus achieved is not more than 5% of the sum of the prescribed elongations.
- In adverse condition to any of the cases above, the jacking operation shall be stopped, the tendons removed and this matter reported to the engineer-in-charge for further instruction. The jacking force should NEVER exceed the Maximum allowable value.

Grouting

- The tendons which satisfy the above conditions shall be grouted properly, ensuring the duct is free of any foreign material and there is no leak or damage around the joints between the anchors and the ducts. Grouting can be normally done immediately after successful completion of tensioning operations and shall not be delayed by more than 5 days of tensioning of the cables.
- The grout shall be prepared with Ordinary Portland cement with suitable expansive admixture approved by the engineer. Admixture containing chloride and nitrate are not permitted. The water/cement ratio shall not be more than 0.48. Retempering of the grout shall not be permitted. The grout shall be mixed with mechanical mixers and shall be continuously kept agitated until pumped in.

Stages and sequence of Prestressing

- The Precast composite girders shall be prestressed in two stages. The specified number of the tendons shall be tensioned in the prescribed sequence shown in the respective drawing sheet.
- The remaining tendons shall be tensioned after specified days after casting of the deck slab, in the sequence shown in the respective drawing sheet.
- The prestressing of the precast girder shall be started only after confirming that the cube specimen has achieved 100% of the prescribed compressive strength. No early prestressing allowed.

Construction methodology and sequence for Precast Prestressed Composite superstructure

- The main girders are be precast near the bridge site at suitable location (approach road or dry river bed, if available) on well prepared casting yard. The choice of location also depends upon the equipment available for lifting or launching the girders. After completion of the prestressing works the girders are either lifted by suitable cranes or pushed/launched with the help of rails and jacks or launching girders and placed carefully over the already completed substructure. Care shall be taken that all the preparatory works for the bearings are done properly before the launching/placing of the girders.
- Lifting shall be done only by the hooks provided at both ends. In case of jacking the jacking points shall be only just under the location of the hooks. No support, lifting or jacking is allowed at any other section of the girder
- After placing all the main girders and finishing the works on the bearings, the formwork for deck slab and cross girders are prepared. All the formwork for deck slab and cross girders shall be supported by the main girders. The main girders shall remain un-propped during casting of the deck slab. Similarly there shall be no false-work or props from the ground or part of substructure during casting of the deck slab.
- The Contractor shall ensure stability of the girders during all stages of construction.
- Dimensional tolerances for the precast girders shall be as per IRC:SP:71-2018, Clause 4.10. If not prescribed otherwise, transportation and handling operation shall follow the guidelines in Clause 4.9 of the same documents.
- The prescribed time-line for construction of the superstructure is as follows

Prestressing of Precast Girder only (Stage 1)	After 28 days of casting or confirming 100% compressive strength of concrete
Lifting/Launching of the Girder	Within 14 days of first stage prestressing
Casting of the Deck Slab	Within 14 days of placing of girder over substructure
Prestressing of Girder (Stage 2)	After 14 days of casting of deck slab
Casting of Footpath, Crash Barrier, Wearing Course etc	Preferably within 7 days but not later than 14 days of Second stage prestressing

Deviation from the above time-line is subject to approval by the engineer. No other vehicle except the concreting apparatus are allowed on the deck until the deck slab has attained its full specified strength.

Construction methodology for Cast-in-situ RCC superstructure

- Construction of Monolithic cast in situ RCC superstructure shall follow the standard practices. The falsework for the girders and deck slab are supported on the ground and removed after specified time period.

Notes on Bearings

- The contractor shall supply, provide and install the bearings designed according to the loadings and other relevant information provided in the drawings or BOQ.
- The dimension and number of layers of the Elastomeric bearings shown in the drawings are tentative. The bearings shall be designed, fabricated, tested and installed as per IRC:83 - 2018, Part-2 for elastomeric bearing and Part-3 for Pot-PTFE bearings, as the case applies.

Notes on Foundation and Substructure

- Standard Specifications and Special provisions to the Standard Specifications (if any) and specific notes on the drawings shall be followed for the construction of the abutments, piers and foundations.
- Backfill behind the abutment shall be places only after the concrete has achieved full 28 days strength. Heavy compaction equipment weighing more than 10 Ton shall not be used within 2.0 meters from the back of the abutment until all the works on superstructure is completed.
- The graded backfill behind the abutment shall be at a slope not steeper than 62 degrees, starting from the back of the footing. The back fill material dry density shall be within 1900 to 2200 kN/m³ and moisture content between 9 to 15%
- In case of new bridge adjacent to the existing bridge, care shall be taken not to render any damage to the elements of the existing bridge. Particular attention shall be paid to the foundation of the existing bridge. The contractor shall ensure that excavation for the foundation of the new bridge does not cause instability or settlement of the foundation of the existing bridge.
- If the existing bridge has a shallow foundation, the contractor shall protect the existing foundation by sheet piling or any other suitable means to the satisfaction of the engineer, before excavating for the foundation of the new bridge.

General Note: (For all Pile Foundation)

- Drilling/Boring works for pile is allowed only with rotary or oscillator type drilling equipment.No percussion method is allowed .Stability of borehole shall be ensured by the use of temporary casing.Use of other methods of borehole stability is subject to approval by the engineer, but in such case use of water/air/chemical jetting for boring process shall not be allowed.
- In case of drilling/boring without temporary casing,the contractor should ensure the stability and uniformity of the borehole before lowering the reinforcement cage and during concreting.
- Boring/Drilling of the piles is preferred in a staggered pattern.Boring/Drilling for any pile shall not commence before 24 hours of completion of concreting of any pile within a radius of 6 meters from its center.
- In case of drilling/boring without temporary casing , the pile shall be lined with 6mm thick permanent casing from the bottom of the pile cap down to 0.5 m below the maximum scour depth or 1.5 m whichever is larger.