Government of Nepal

Ministry of Physical Infrastructure and Transport

Department of Roads

Project Directorate (ADB)

Implementing Agency : DOR, DCID

Project Preparatory Consultants

Under

SASEC Highway Improvement Project (SHIP-PPC)

(ADB Loan No: 3722 Nep)

Contract No. SHIP/PPC/2020/02

Jitgadi Bridge(46-H001-287_AB)

St. Ch : 590+037.15 ~ End Ch : 590+059.85

Detailed Drawing

Butwal - Gorusinghe Sector

November,2022

CONTENTS

S.No.	DESCRIPTION	DWG. NO	NO. OF SHEETS
1.	General Notes.	1 - 2	2
2.	Topographic Map.	2.1	1
3.	General Arrangement.	3-4	2
4.	Bore Logs.	5	1
5.	Detail of Superstructure.	6	1
6.	Reinforcement Details of Slab.	7	1
7.	Reinforcement Details of Main Girder .	8	1
8.	Reinforcement details of Cross Girder.	9	1
9.	Bar Bending Schedule of Slab & Main Girder.	10	1
10.	Abutment Details.	11	1
11.	Reinforcement Details of Abutment.	12	1
12.	BBS & Details of Abutment.	13	1
13.	Reinforcement Details of Approach Slab.	14	1
14.	Miscellaneous Detail.	15-16	2
15.	River Training Work.	16.1	1
16.	Plan & Profile.	17	1
17.	Cross Section.	17a	1
18.	Layout Plan.	18-19	2

GENERAL NOTES

General

- Metric system of measurement is used in all drawings. Elevation and Stations are shown in Meter and all other dimensions are in Millimeters, except indicated otherwise.
- In case of contradictions, specific notes on respective sheet shall supersede the General Notes
- No dimensions shall be scaled from the drawings. Only written dimensions shall be followed. Any doubtful matter in the drawings shall be brought to the attention of the engineer-in-charge for any corrections before the execution of the works.

Design Notes

The design codes followed:
For RCC and PSC concrete - IRC:112-2020
For loads and stresses - IRC:6-2017
For substructure and foundations - IRC:78-2014
For seismic design - IRC:SP:114-2018. Seismic zone V. Importance factor 1.2

Design live loads:

For urban area bridges
Case 1 - 3 lanes of class A + pedestrians; 1 lane of class A + 1 lane of class 70R + pedestrians
Case 2 - 4 lanes or class A; 2 lanes of class A + 1 lane of class 70R. No pedestrians
For non-urban area bridges
Case 1 - 2 lanes of class A + pedestrians; 1 lane of class 70R + pedestrians
Case 2 - 3 lanes of class A; 1 lane of class A + 1 lane of class 70R. No pedestrians.

Notes on Concrete

In General the grade of concrete to be used shall be as follows:
(**unless otherwise specified in the respective drawing sheets**)

For superstructure deck slab, wearing course, crash barriers:	M30
For raised footpaths:	M25
For main girders and cross girders of superstructure with PSC girders:	M45
For main girders and cross girders of superstructure with RCC girders:	M30
For substructure: Abutment stem, ballast wall, stoppers, bearing pedestals, pier cap, pier stem and pile caps:	M30
For bored and cast in situ piles:	M35
For leveling course:	M15

The maximum size of aggregate shall be as per IRC:112-2020, clause 18.4.4.2

Admixture to the concrete

To improve workability and/or increase initial setting time of concrete and cement grout, admixture conforming to IS:9103 and ASTM C-494, (Type F - High Range Water Reducing admixture) can be added in appropriate dosage, subject to their satisfactory proven use.

Clear Cover to reinforcement (unless otherwise specified in the respective drawing sheets)

Reinforcement bars of all components of the superstructure:	40mm
Prestressing ducts or strands in superstructure:	75mm
All components of abutment, pier, pile caps and piles (except stoppers and bearing pedestals):	75mm
Bearing pedestals and Stoppers:	50mm

Cover shall be ensured with the use of properly sized cement concrete blocks which can be secured to the re-bars or other devices approved by the engineer-in-charge. Use of loose stones or wooden pieces is not permitted.

Notes on Reinforcement

- All reinforcing steel bars shall be High Strength Deformed bars with grade Fe500 conforming to IS:1786
- Laps and Splices shall conform to IRC:112-2020, Clause 15.2.5. Use of mechanical coupler is permitted upon approval by the engineer.

Notes on Prestressing

- Prestressing strands shall be Class-2, uncoated 7 ply, low relaxation type with ultimate tensile stress 1862 N/mm², conforming to IS:14268.
- The diameter of strands, their number in a tendon and the total jacking force to be applied is specified in the respective drawing sheet. All the initial and long term losses are already incorporated in design.
- Corrugated HDPE Sheathing ducts shall be used with the minimum internal diameter not less than three times the cross sectional area of the tendon. The wall thickness and other properties of the sheathing shall be as per IRC:112-2020, clause 13.4.3
- The specified profile and the alignment of the ducts shall be strictly maintained by properly securing the ducts to the re-bars. If required, pieces of re-bars can be added or the re-bars slightly repositioned or bent to maintain the profile and alignment, with approval of the engineer-in-charge.
- The jacking equipment shall be fitted with appropriate force measuring device and shall be regularly checked and calibrated as prescribed by the manufacturer.
- Jacking shall be done from both ends simultaneously and gradually, recording the elongation both sides. The expected final elongation mentioned in the respective drawings sheet is based on modulus of elasticity of the strands (Es) equal to 1.95x10^5 MPa. If the Es of supplied strands is different then the elongation values shall be recalculated by multiplying the Design values of elongation by the ratio of Design Es / Actual Es.
- In case the total elongation is not achieved at the prescribed jacking force, the jacking operation can be continued until the force reaches the maximum allowable value. If the required elongation is achieved at jacking force lower than the prescribed value, the jacking operation shall continue until the prescribed force is reached, provided the Sum of the additional elongations thus achieved is not more than 5% of the sum of the prescribed elongations.
- In adverse condition to any of the cases above, the jacking operation shall be stopped, the tendons removed and this matter reported to the engineer-in-charge for further instruction. The jacking force should NEVER exceed the Maximum allowable value.

Grouting

- The tendons which satisfy the above conditions shall be grouted properly, ensuring the duct is free of any foreign material and there is no leak or damage around the joints between the anchors and the ducts. Grouting can be normally done immediately after successful completion of tensioning operations and shall not be delayed by more than 5 days of tensioning of the cables.
- The grout shall be prepared with Ordinary Portland cement with suitable expansive admixture approved by the engineer. Admixture containing chloride and nitrate are not permitted. The water/cement ratio shall not be more than 0.48. Retempering of the grout shall not be permitted. The grout shall be mixed with mechanical mixers and shall be continuously kept agitated until pumped in.

Stages and sequence of Prestressing

- The Precast composite girders shall be prestressed in two stages. The specified number of the tendons shall be tensioned in the prescribed sequence shown in the respective drawing sheet.
- The remaining tendons shall be tensioned after specified days after casting of the deck slab, in the sequence shown in the respective drawing sheet.
- The prestressing of the precast girder shall be started only after confirming that the cube specimen has achieved 100% of the prescribed compressive strength. No early prestressing allowed.

Construction methodology and sequence for Precast Prestressed Composite superstructure

- The main girders are be precast near the bridge site at suitable location (approach road or dry river bed, if available) on well prepared casting yard. The choice of location also depends upon the equipment available for lifting or launching the girders. After completion of the prestressing works the girders are either lifted by suitable cranes or pushed/launched with the help of rails and jacks or launching girders and placed carefully over the already completed substructure. Care shall be taken that all the preparatory works for the bearings are done properly before the launching/placing of the girders.
- Lifting shall be done only by the hooks provided at both ends. In case of jacking the jacking points shall be only just under the location of the hooks. No support, lifting or jacking is allowed at any other section of the girder
- After placing all the main girders and finishing the works on the bearings, the formwork for deck slab and cross girders are prepared. All the formwork for deck slab and cross girders shall be supported by the main girders. The main girders shall remain un-propped during casting of the deck slab. Similarly there shall be no false-work or props from the ground or part of substructure during casting of the deck slab.
- The Contractor shall ensure stability of the girders during all stages of construction.
- Dimensional tolerances for the precast girders shall be as per IRC:SP:71-2018, Clause 4.10. If not prescribed otherwise, transportation and handling operation shall follow the guidelines in Clause 4.9 of the same documents.
- The prescribed time-line for construction of the superstructure is as follows

Prestressing of Precast Girder only (Stage 1)	After 28 days of casting or confirming 100% compressive strength of concrete
Lifting/Launching of the Girder	Within 14 days of first stage prestressing
Casting of the Deck Slab	Within 14 days of placing of girder over substructure
Prestressing of Girder (Stage 2)	After 14 days of casting of deck slab
Casting of Footpath, Crash Barrier, Wearing Course etc	Preferably within 7 days but not later than 14 days of Second stage prestressing

Deviation from the above time-line is subject to approval by the engineer. No other vehicle except the concreting apparatus are allowed on the deck until the deck slab has attained its full specified strength.

Construction methodology for Cast-in-situ RCC superstructure

- Construction of Monolithic cast in situ RCC superstructure shall follow the standard practices. The falsework for the girders and deck slab are supported on the ground and removed after specified time period.

Notes on Bearings

- The contractor shall supply, provide and install the bearings designed according to the loadings and other relevant information provided in the drawings or BOQ.
- The dimension and number of layers of the Elastomeric bearings shown in the drawings are tentative. The bearings shall be designed, fabricated, tested and installed as per IRC:83 - 2018, Part-2 for elastomeric bearing and Part-3 for Pot-PTFE bearings, as the case applies.

Notes on Foundation and Substructure

- Standard Specifications and Special provisions to the Standard Specifications (if any) and specific notes on the drawings shall be followed for the construction of the abutments, piers and foundations.
- Backfill behind the abutment shall be places only after the concrete has achieved full 28 days strength. Heavy compaction equipment weighing more than 10 Ton shall not be used within 2.0 meters from the back of the abutment until all the works on superstructure is completed.
- The graded backfill behind the abutment shall be at a slope not steeper than 62 degrees, starting from the back of the footing. The back fill material dry density shall be within 1900 to 2200 kN/m³ and moisture content between 9 to 15%
- In case of new bridge adjacent to the existing bridge, care shall be taken not to render any damage to the elements of the existing bridge. Particular attention shall be paid to the foundation of the existing bridge. The contractor shall ensure that excavation for the foundation of the new bridge does not cause instability or settlement of the foundation of the existing bridge.
- If the existing bridge has a shallow foundation, the contractor shall protect the existing foundation by sheet piling or any other suitable means to the satisfaction of the engineer, before excavating for the foundation of the new bridge.

General Note: (For all Pile Foundation)

- Drilling/Boring works for pile is allowed only with rotary or oscillator type drilling equipment.No percussion method is allowed .Stability of borehole shall be ensured by the use of temporary casing.Use of other methods of borehole stability is subject to approval by the engineer, but in such case use of water/air/chemical jetting for boring process shall not be allowed.
- In case of drilling/boring without temporary casing,the contractor should ensure the stability and uniformity of the borehole before lowering the reinforcement cage and during concreting.
- Boring/Drilling of the piles is preferred in a staggered pattern.Boring/Drilling for any pile shall not commence before 24 hours of completion of concreting of any pile within a radius of 6 meters from its center.
- In case of drilling/boring without temporary casing , the pile shall be lined with 6mm thick permanent casing from the bottom of the pile cap down to 0.5 m below the maximum scour depth or 1.5 m whichever is larger.

Government of Nepal Ministry of Physical Infrastructure and Transport **Department of Roads** **Project Directorate Office (ADB)** **SASEC Highway Improvement Project-** **Project Preparatory Consultant (SHIP-PPC)** **ADB Loan No: 3722-NEP**	**CONSULTANT:** Soosung Engineering Co. Ltd, Korea in association with ERMC P (Ltd) and TR-Tech Studio of Engineeering Nepal	**IMPLEMENTING AGENCY:** **DOR, DCID** **ROAD NAME:** **East West Highway (H01)** **Butwal - Gorusinghe Section**	**SHEET TITLE:** Topographic Map of **Jitgadi Bridge** (46/H001/287_A,B)	**SCALE:** 1:1		**NAME**	**SIGNATURE**	**REV NO.**	**DESCRIPTION**	**DATE:** November , 2022 **DWG.NO.:** 46_Jitgadi **SHEET NO.:** 2.1/19
					Designed by:	Saroj Bhattarai				
					Checked by:	P. Upadhyaya				
					Approved by:	Dr. T.H.Choi				

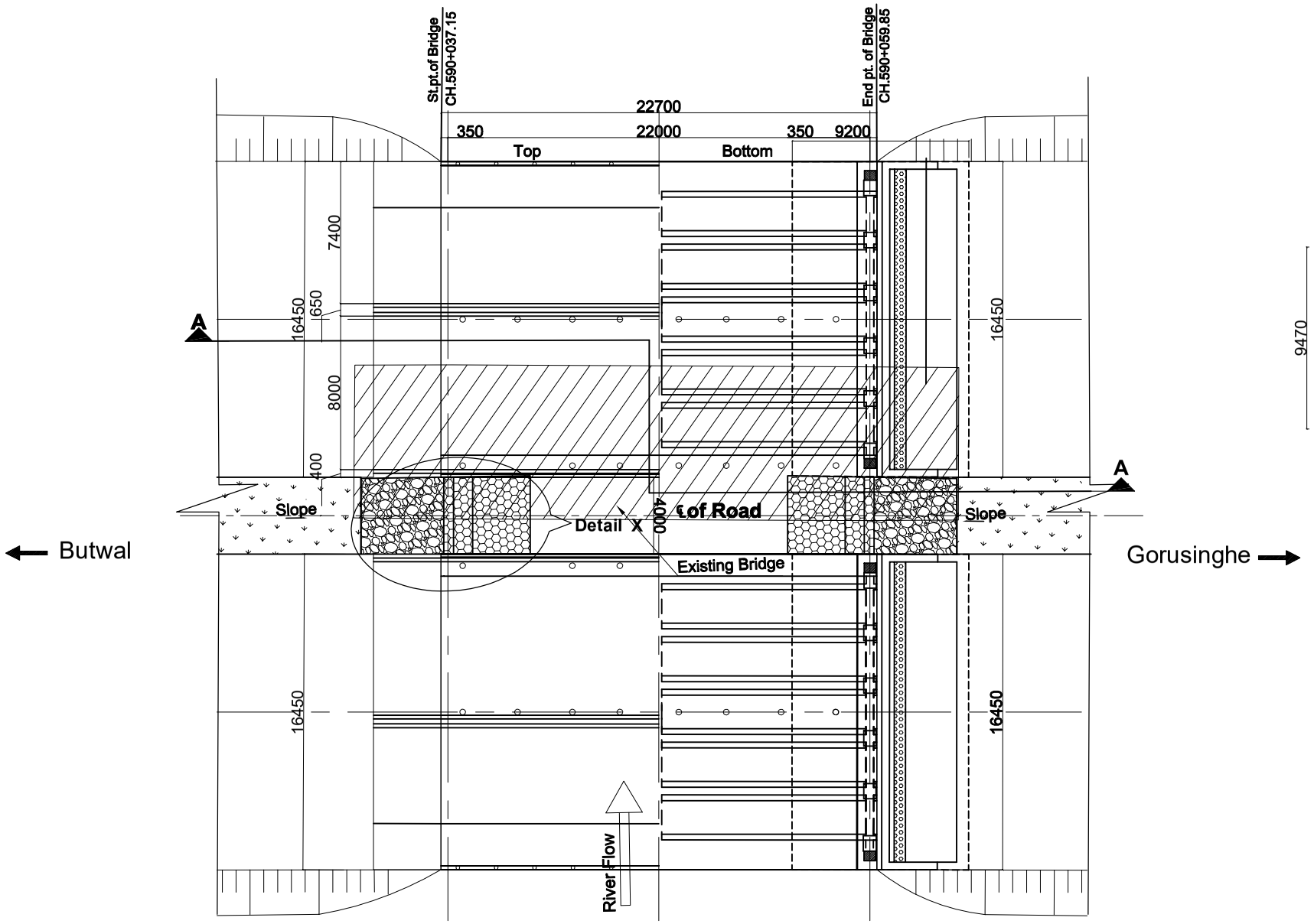

Half Sectional Plan
Scale:-1:300

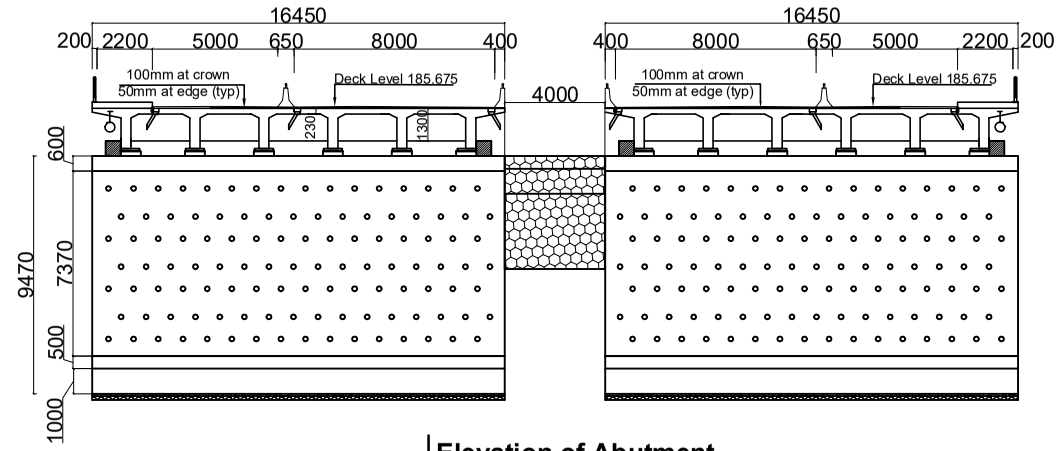

Elevation of Abutment
Scale:-1:300

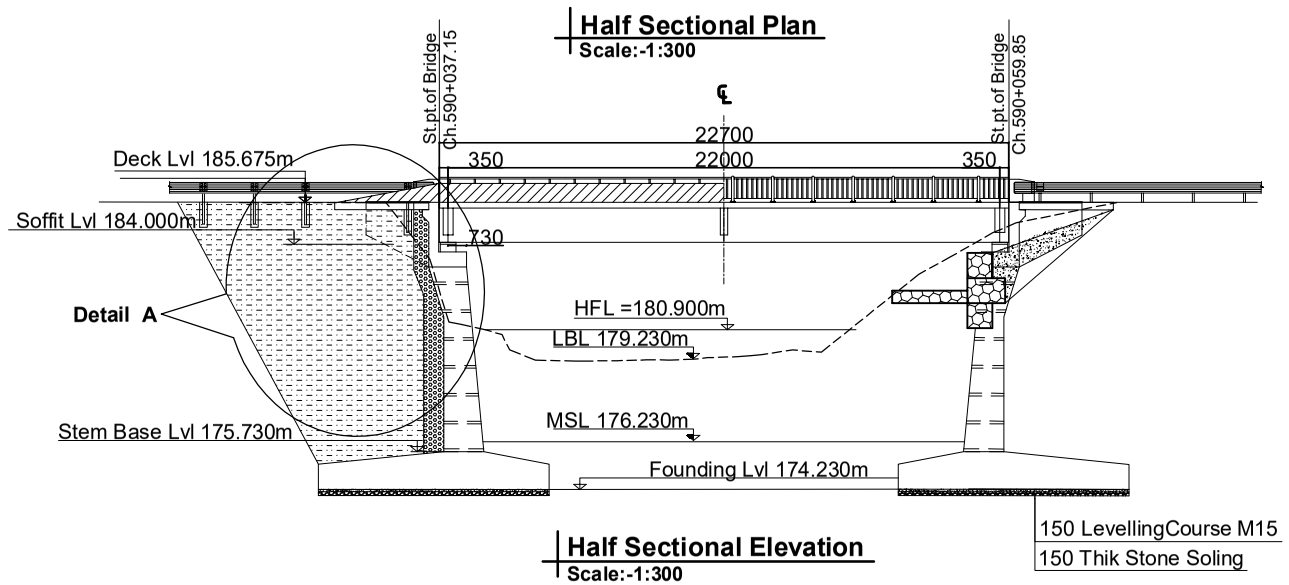

Half Sectional Elevation
Scale:-1:300

Note :-
MSL :- Maximum Scour Level
HFL :- High Flood Level
LBL :- Lowest Bed Level
RL :- Reduced Level

	Name(NEC Number)	Signature
P. Engineer	P. Upadhyaya (Civil A 675)	
Structure Engineer	K.P.Wagle(Civil A 127) / P.Shrestha(Civil A 676) / S.Bhattarai (Civil A 904)	
Hydrologist	Dr. P.C. Jha(Civil A 166) / S. Adhikari (Civil A 408)	
Geotechnical Engineer	A. Adhikari(ka 199) / Dr. V . R. S. Shahi	

Government of Nepal
Ministry of Physical Infrastructure and Transport
Department of Roads
Project Directorate Office (ADB)
SASEC Highway Improvement Project-
Project Preparatory Consultant (SHIP-PPC)
ADB Loan No: 3722-NEP

CONSULTANT:
Soosung Engineering Co. Ltd,
Korea
in association with
ERMC P (Ltd)
and
TSE-Tech Studio of Engineeering
Nepal

IMPLEMENTING AGENCY:
DOR, DCID

ROAD NAME:
East West Highway (H01)
Butwal - Gorusinghe Section

SHEET TITLE:
General Arrangement
of
Jitgadi Bridge
(46/H001/287_A,B)

SCALE:
1:300

	NAME	SIGNATURE	REV NO.	DESCRIPTION
Designed by:	Saroj Bhattarai			
Checked by:	P. Upadhyaya			
Approved by:	Dr. T.H.Choi			

DATE: November , 2022
DWG.NO.: 46_Jitgadi
SHEET NO.: 03/19

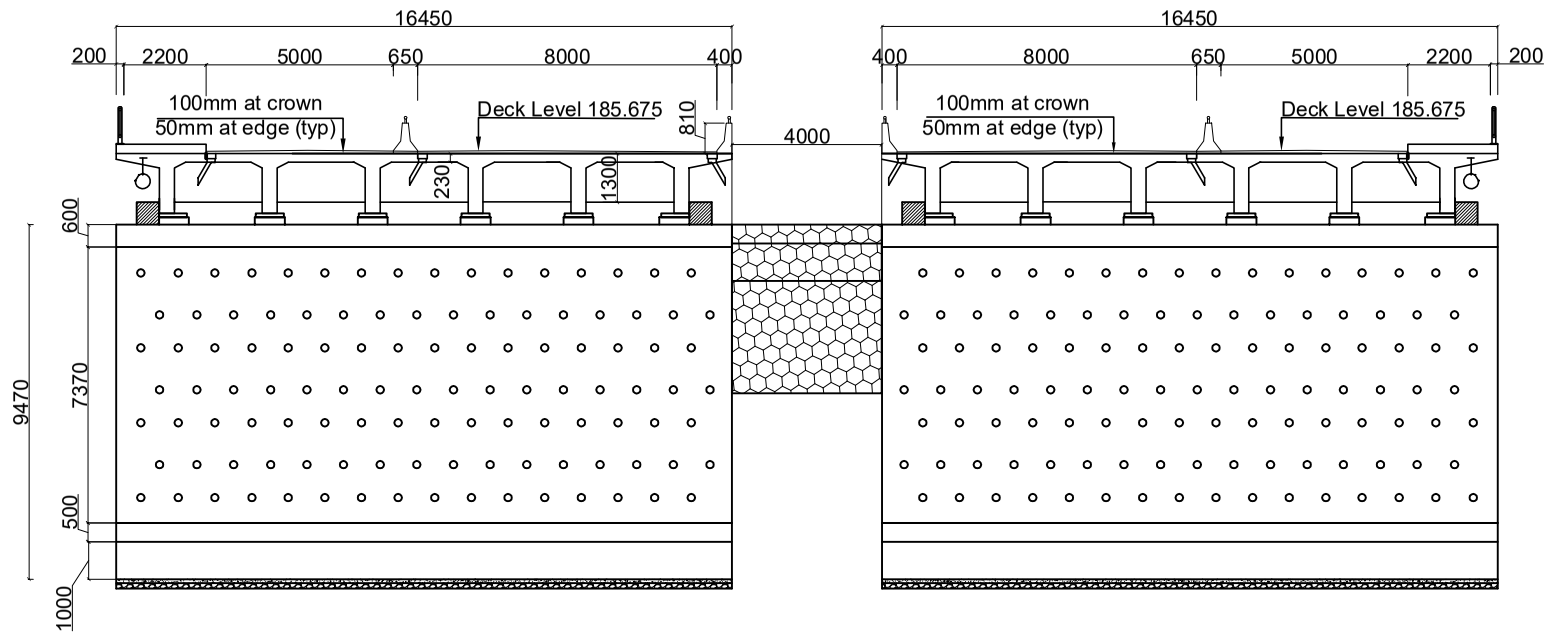

Section Of Abutment At (B-B)
Scale:-1:200

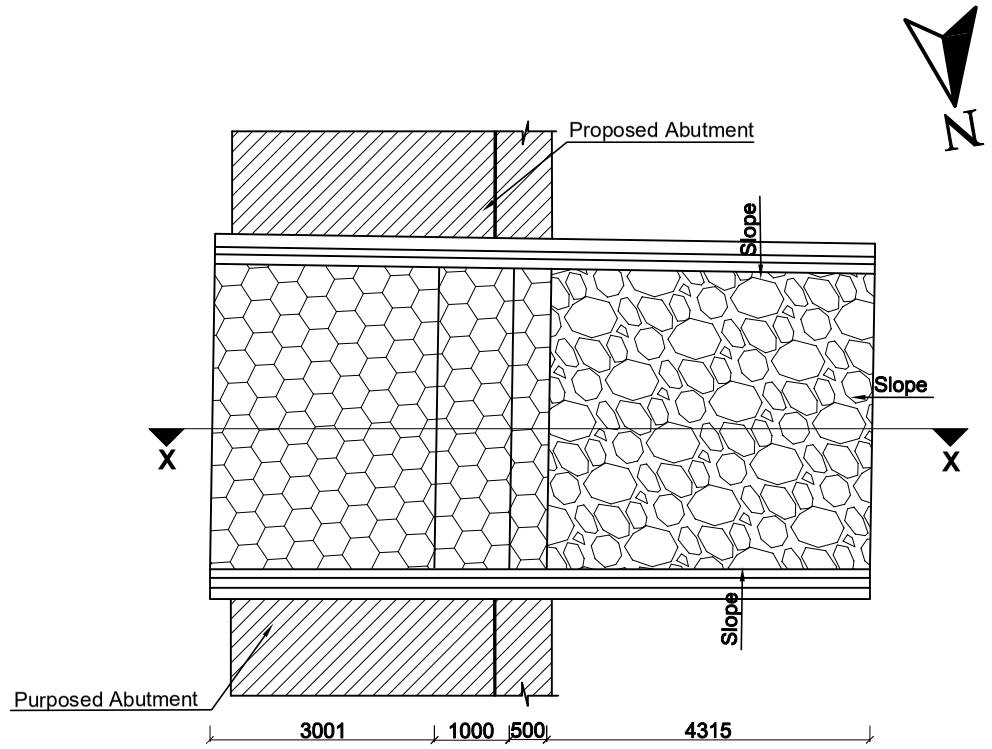

Detail Plan of X
(Transition Between Approch Embankmant)
Scale:-1:100

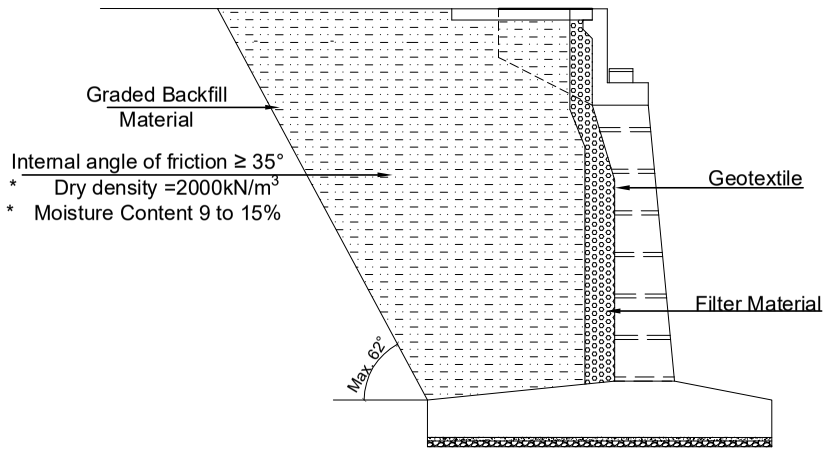

Detail of A
Scale:-1:200

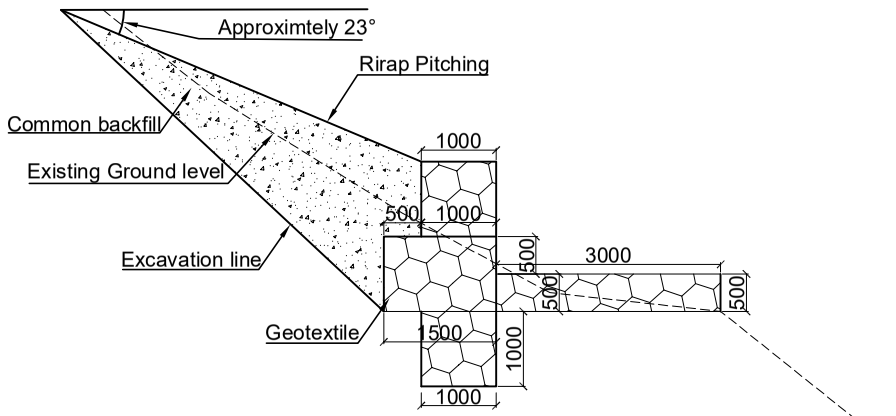

Section at X-X
Scale:-1:100

	Name(NEC Number)	Signature
P. Engineer	P. Upadhyaya (Civil A 675)	
Structure Engineer	K.P.Wagle(Civil A 127) / P.Shrestha(Civil A 676) / S.Bhattarai (Civil A 904)	
Hydrologist	Dr. P.C. Jha(Civil A 166) / S. Adhikari (Civil A 408)	
Geotechnical Engineer	A. Adhikari(ka 199) / Dr. V . R. S. Shahi	

Government of Nepal
Ministry of Physical Infrastructure and Transport
Department of Roads
Project Directorate Office (ADB)
SASEC Highway Improvement Project-
Project Preparatory Consultant (SHIP-PPC)
ADB Loan No: 3722-NEP

CONSULTANT:
Soosung Engineering Co. Ltd, Korea
in association with
ERMC P (Ltd)
and
TSC-Tech Studio of Engineeering Nepal

IMPLEMENTING AGENCY:
DOR, DCID

ROAD NAME:
East West Highway (H01)

Butwal - Gorusinghe Section

SHEET TITLE:
General Arrangement of
Jitgadi Bridge
(46/H001/287_A,B)

SCALE:
1:300

	NAME	SIGNATURE	REV NO.	DESCRIPTION
Designed by:	Saroj Bhattarai			
Checked by:	P. Upadhyaya			
Approved by:	Dr. T.H.Choi			

DATE: November , 2022
DWG.NO.: 46_Jitgadi
SHEET NO.: 04/19

Borehole No : GUH/LB-2
Easting : 83° 27' 24.33 " Northing : 27° 42' 15.63" Elevation, m : 179.379
Borehole No : GUH/RB-1
Easting : 83° 27' 23.89" Northing : 27° 42' 15.85" Elevation, m : 181.035

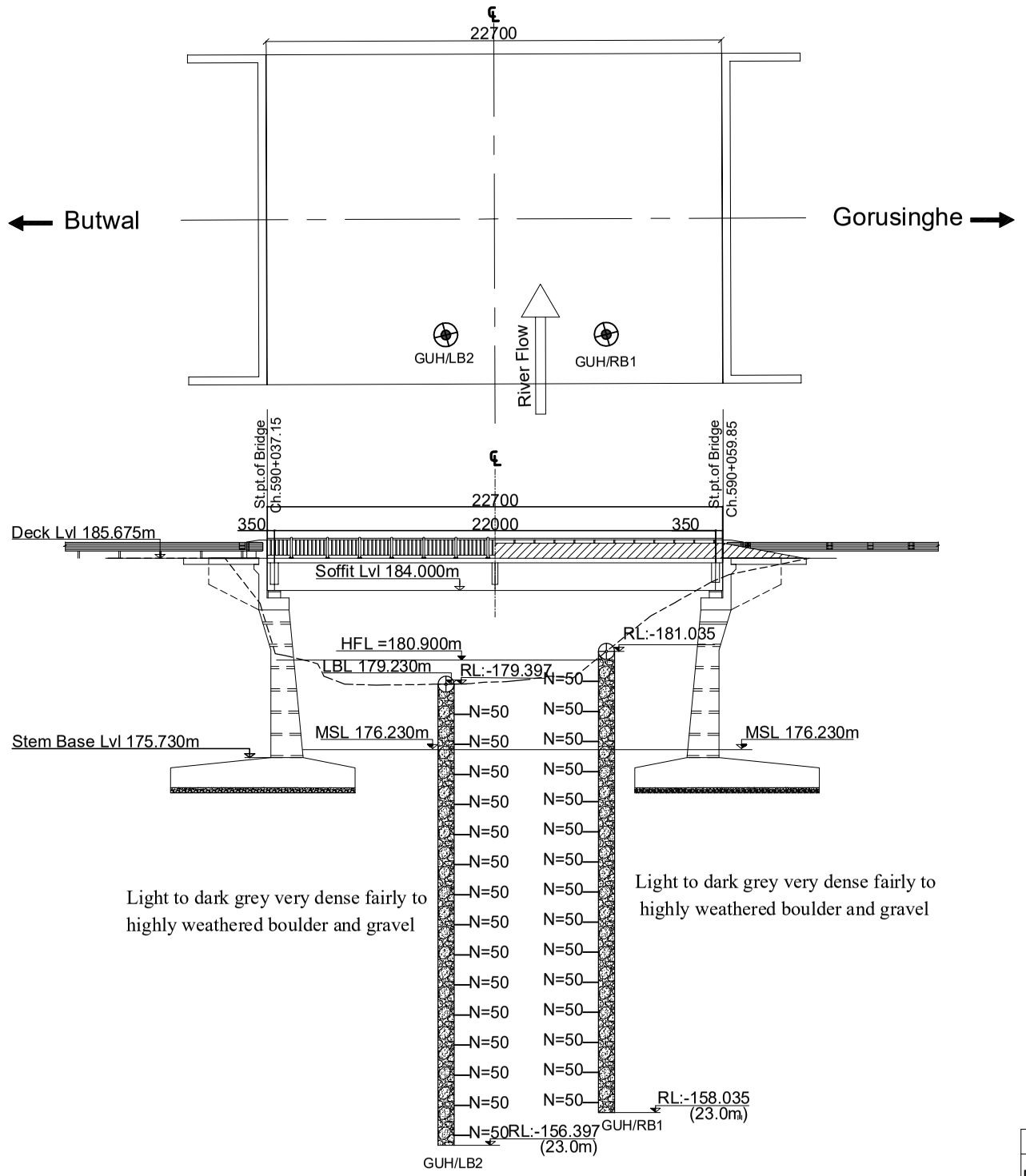

Borlog Details
Scale:-1:300

Note :-
MSL :- Maximum Scour Level
HFL :- High Flood Level
LBL :- Lowest Bed Level
RL :- Reduced Level

NOTE ON SUB-SOIL PROFILE
The sub-soil profile shown here is based on information obtained from the investigation bore-holes at the locations as shown.The actual soil type away from the vicinity of the boreholes may differ .

	Name(NEC Number)	Signature
P. Engineer	P. Upadhyaya (Civil A 675)	
Structure Engineer	K.P.Wagle(Civil A 127) / P.Shrestha(Civil A 676) / S.Bhattarai (Civil A 904)	
Hydrologist	Dr. P.C. Jha(Civil A 166) / S. Adhikari (Civil A 408)	
Geotechnical Engineer	A. Adhikari(ka 199) / Dr. V . R. S. Shahi	

Government of Nepal Ministry of Physical Infrastructure and Transport **Department of Roads** **Project Directorate Office (ADB)** **SASEC Highway Improvement Project-** **Project Preparatory Consultant (SHIP-PPC)** **ADB Loan No: 3722-NEP**	**CONSULTANT:** Soosung Engineering Co. Ltd, Korea in association with ERMC P (Ltd) and TSE-Tech Studio of Engineeering Nepal	**IMPLEMENTING AGENCY:** **DOR, DCID** **ROAD NAME:** **East West Highway (H01)** **Butwal - Gorusinghe Section**	**SHEET TITLE:** Bore Log of **Jitgadi Bridge** (46/H001/287_A,B)	**SCALE:** 1:300		**NAME**	**SIGNATURE**	**REV NO.**	**DESCRIPTION**	**DATE:** November , 2022 **DWG.NO.:** 46_Jitgadi **SHEET NO.:** 05/19
					Designed by:	Saroj Bhattarai				
					Checked by:	P. Upadhyaya				
					Approved by:	Dr. T.H.Choi				

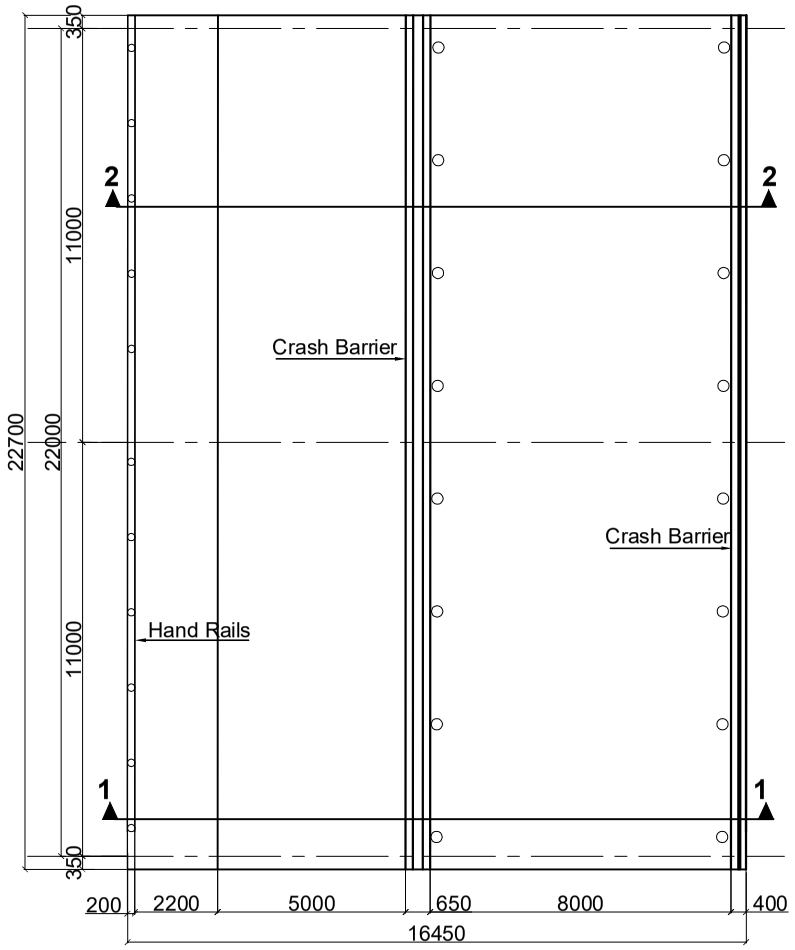

Plan Of Deck
Scale:-1:200

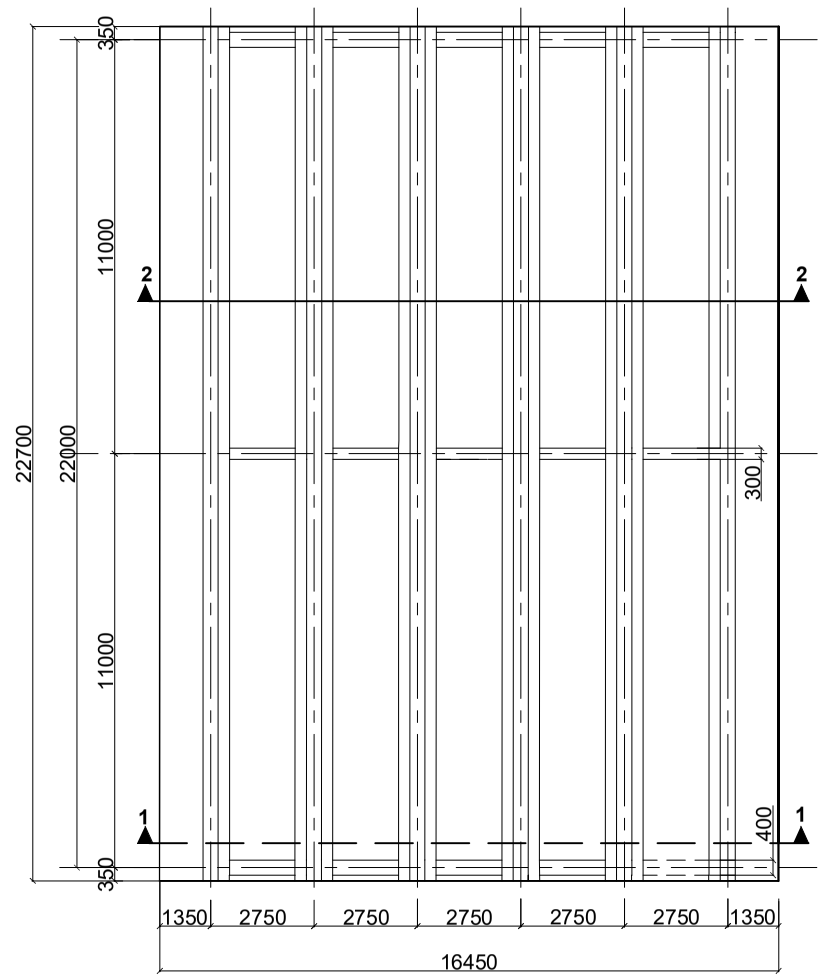

Plan Of Girder
Scale:-1:200

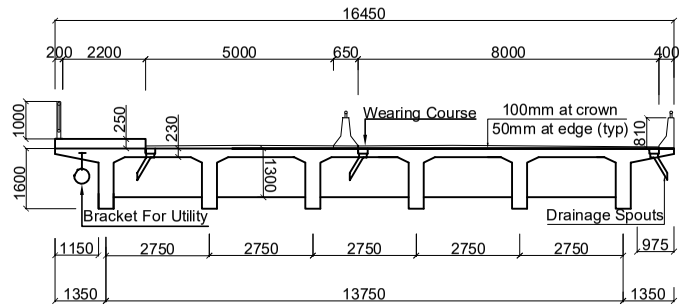

Section At 1-1
Scale:-1:150

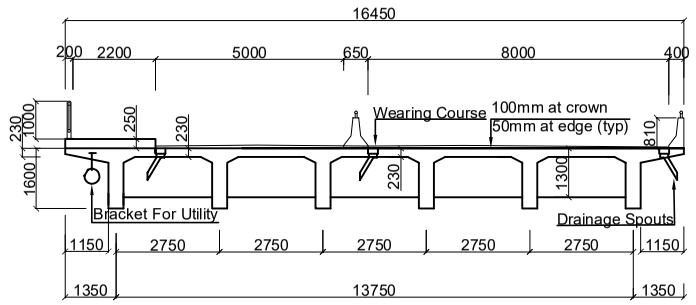

Section At 2-2
Scale:-1:150

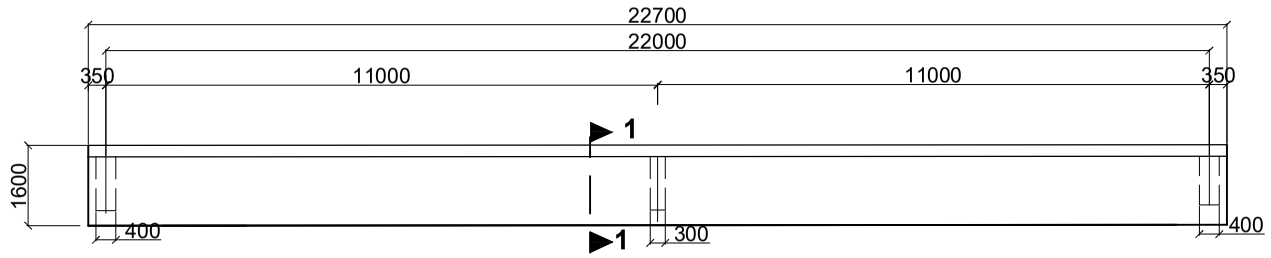

Longitudinal Sectional Elevation
Scale:-1:150

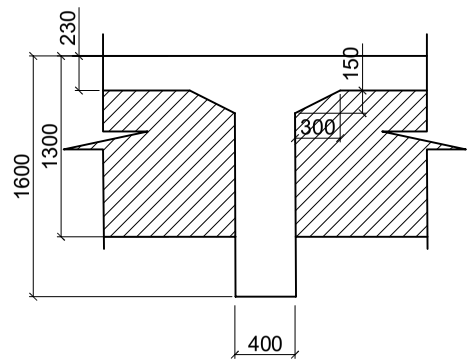

Section 1-1 Main Girder
Scale:-1:50

NOTES:
Dowel bars similar to the longitudional bars of the cross section girders shall be placed in the precast main girder before casting. The longitudional bars of the cross girder shall be lapped to the dowel bers, which shall have a lap length of 60 dia. of the corresponding bars.

NOTE:
The bridge has been designed to safely carry three driving lanes. If required in future the footpath can be used as driving lane, moving the crash barrier to the location of the hand-rails.

Government of Nepal Ministry of Physical Infrastructure and Transport **Department of Roads** **Project Directorate Office (ADB)** **SASEC Highway Improvement Project-** **Project Preparatory Consultant (SHIP-PPC)** **ADB Loan No: 3722-NEP**	**CONSULTANT:** Soosung Engineering Co. Ltd, Korea in association with ERMC P (Ltd) and TSE-Tech Studio of Engineeering Nepal	**IMPLEMENTING AGENCY:** **DOR, DCID** **ROAD NAME:** **East West Highway (H01)** **Butwal - Gorusinghe Section**	**SHEET TITLE:** Detaill of Superstructure of **Jitgadi Bridge** (46/H001/287_A,B)	**SCALE:** As Shown		**NAME**	**SIGNATURE**	**REV NO.**	**DESCRIPTION**	**DATE:** November , 2022 **DWG.NO.:** 287_Jitgadi **SHEET NO.:** 06/19
					Designed by:	Saroj Bhattarai				
					Checked by:	P. Upadhyaya				
					Approved by:	Dr. T.H.Choi				

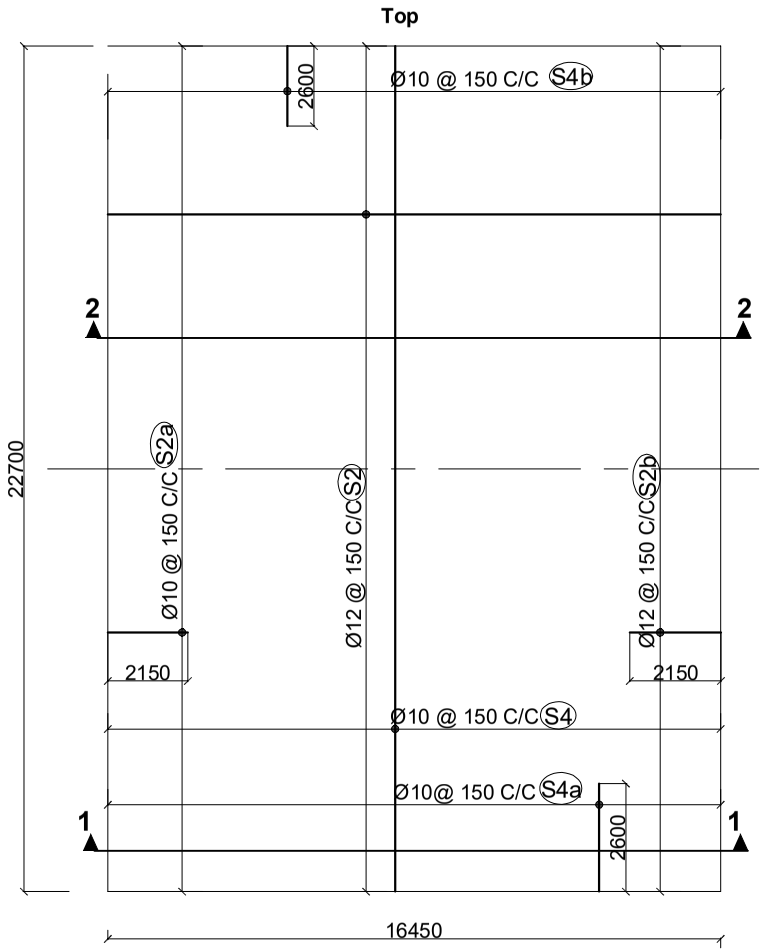

Reinforcement Details Of Deck Slab(Top Face)
Scale:-1:200

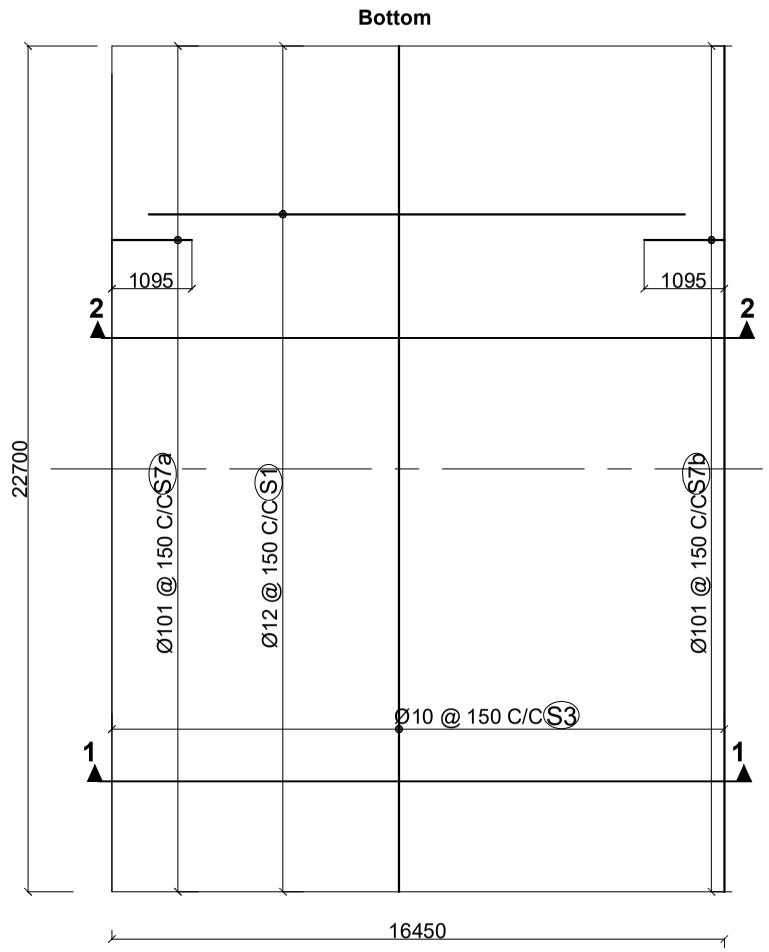

Reinforcement Details Of Deck Slab(Bottom Face)
Scale:-1:200

NOTE:

1.On Shear Connection:
The transverse bars of the deck slab(S2) shall be tied to vertical stirrups of the longitudinal girders.

2.Top Surface of the Main Girder:
Surface to be roughened by wire brush immediately after initial setting. The surface shall be properly cleaned by pressure blower prior to casting of the deck concrete

3.On Wearing Course:
The level of wearing course along the longitudinal direction shall be kept horizontal throughout the length of the deck. The thickness of wearing course towards the ends along the deck shall be increased suitably to compensate for the slope due to hogging of the girder by pre stress.

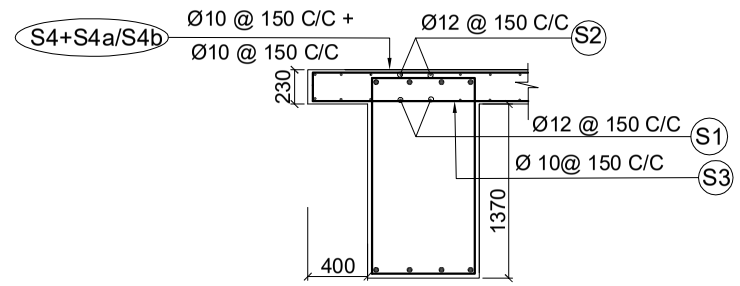

Reinforcement Details At Deck Extension
Between The Main Girder

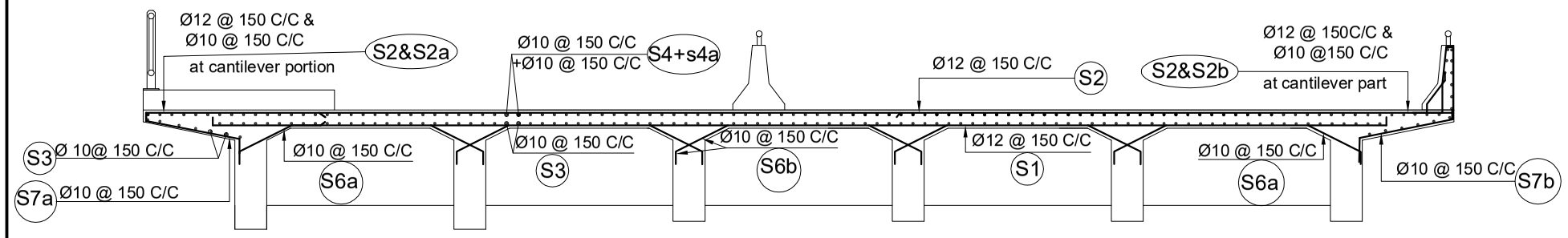

Section At 1-1
Scale:-1:75

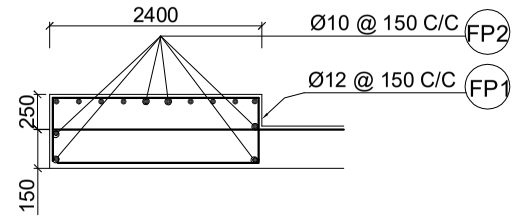

Reinforcement Details At Footpath
Scale:- 1:20

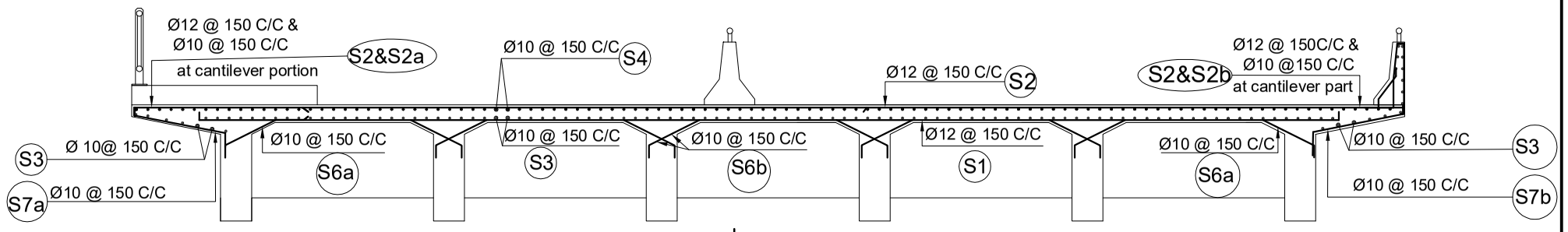

Section At 2-2
Scale:-1:75

Government of Nepal Ministry of Physical Infrastructure and Transport **Department of Roads** **Project Directorate Office (ADB)** **SASEC Highway Improvement Project-** **Project Preparatory Consultant (SHIP-PPC)** **ADB Loan No: 3722-NEP**	**CONSULTANT:** Soosung Engineering Co. Ltd, Korea in association with ERMC P (Ltd) and TPE-Tech Studio of Engineeering Nepal	**IMPLEMENTING AGENCY:** **DOR, DCID** **ROAD NAME:** **East West Highway (H01)** **Butwal - Gorusinghe Section**	**SHEET TITLE:** Reinforcement Details of Slab of **Jitgadi Bridge** (46/H001/287_A,B)	**SCALE:** As Shown		**NAME**	**SIGNATURE**	**REV NO.**	**DESCRIPTION**	**DATE:** November , 2022 **DWG.NO.:** 287_Jitgadi **SHEET NO.:** 07/19
					Designed by:	Saroj Bhattarai				
					Checked by:	P. Upadhyaya				
					Approved by:	Dr. T.H.Choi				

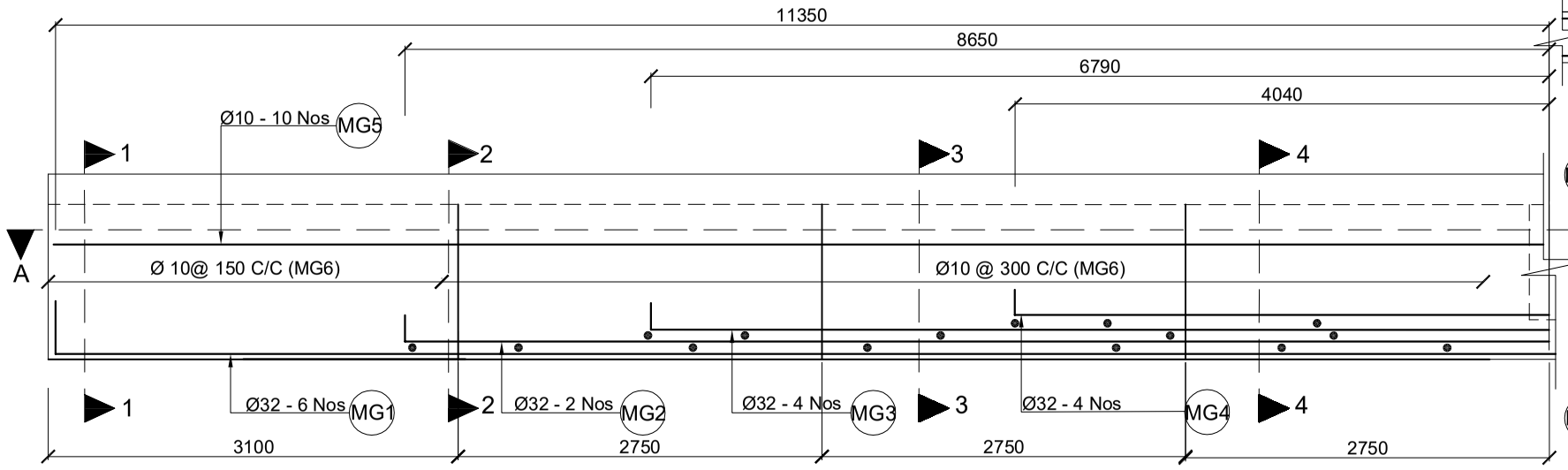

Reinforcement Details At Sectional Elevation Of Main Girder
Scale:-1:50

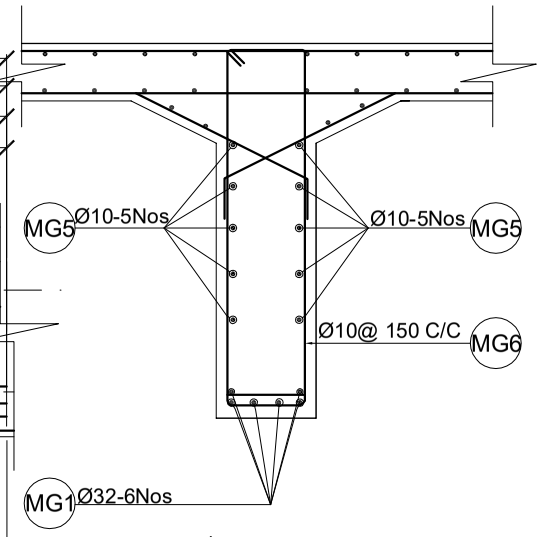

Section At 1-1
Scale:-1:30

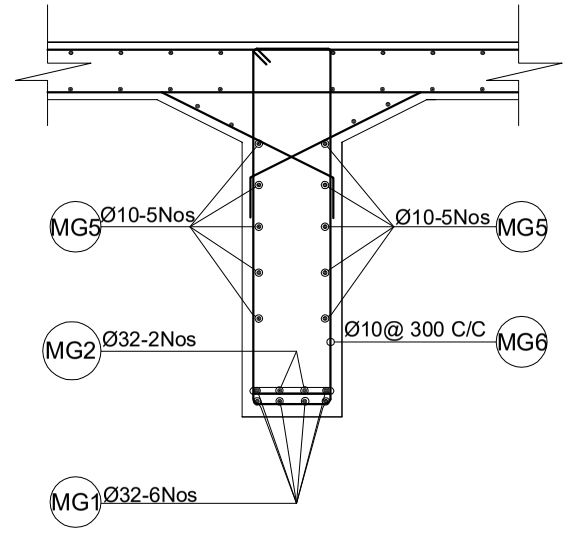

Section At 2-2
Scale:-1:30

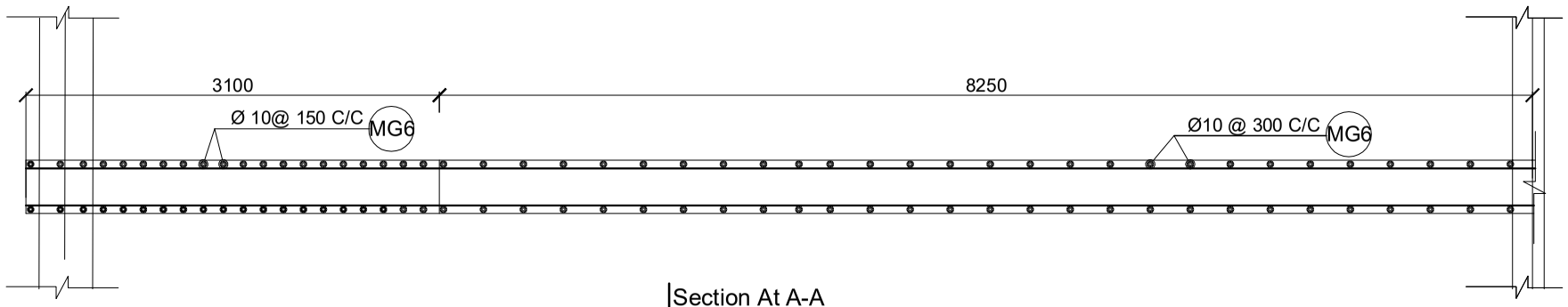

Section At A-A
Scale:-1:50

MG1			MG1
MG1	MG1	MG1	MG1

Diagram of Bar Position
Section At 1-1

MG1	MG2	MG2	MG1
MG1	MG1	MG1	MG1

Diagram of Bar Position
Section At 2-2

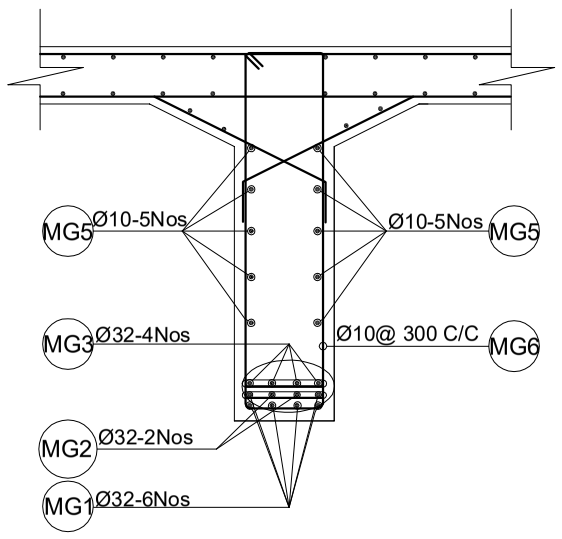

Section At 3-3
Scale:-1:30

MG3	MG3	MG3	MG3
MG1	MG2	MG2	MG1
MG1	MG1	MG1	MG1

Diagram of Bar Position
Section At 3-3

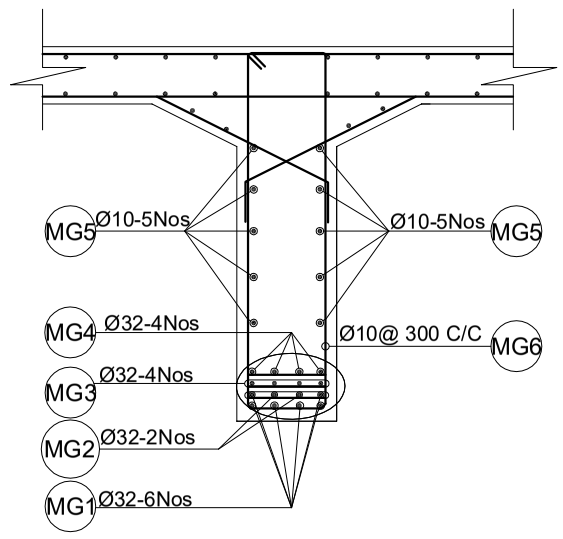

Section At 4-4
Scale:-1:30

MG4	MG4	MG4	MG4
MG3	MG3	MG3	MG3
MG1	MG2	MG2	MG1
MG1	MG1	MG1	MG1

Diagram of Bar Position
Section At 4-4

Government of Nepal Ministry of Physical Infrastructure and Transport **Department of Roads** **Project Directorate Office (ADB)** **SASEC Highway Improvement Project-** **Project Preparatory Consultant (SHIP-PPC)** **ADB Loan No: 3722-NEP**	**CONSULTANT:** Soosung Engineering Co. Ltd, Korea in association with ERMC P (Ltd) and TSC-Tech Studio of Engineeering Nepal	**IMPLEMENTING AGENCY:** **DOR, DCID** **ROAD NAME:** **East West Highway (H01)** **Butwal - Gorusinghe Section**	**SHEET TITLE:** Reinforcement Details of Girder of **Jitgadi Bridge** (46/H001/287_A,B)	**SCALE:** As Shown		**NAME**	**SIGNATURE**	**REV NO.**	**DESCRIPTION**	**DATE:** November , 2022 **DWG.NO.:** 287_Jitgadi **SHEET NO.:** 08/19
					Designed by:	Saroj Bhattarai				
					Checked by:	P. Upadhyaya				
					Approved by:	Dr. T.H.Choi				

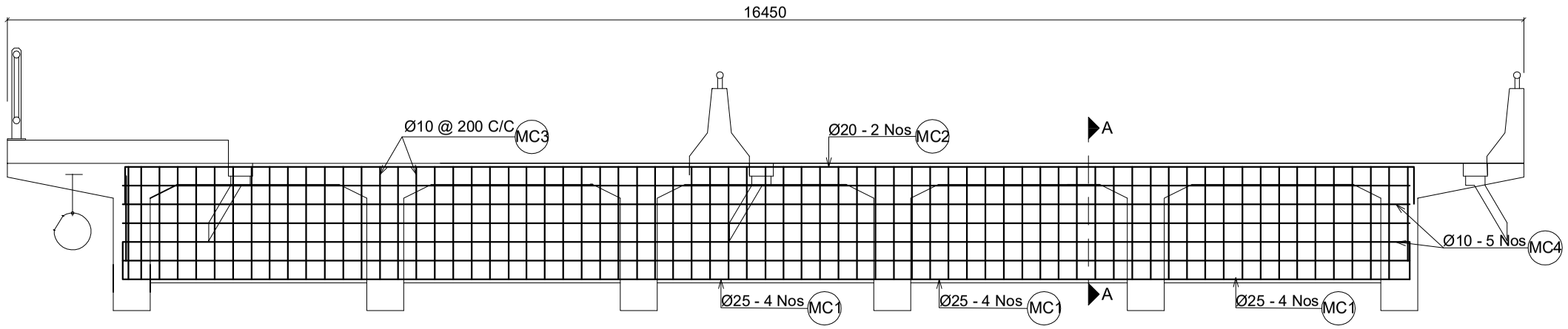

Intermediate Cross Girders
Scale:-1:60

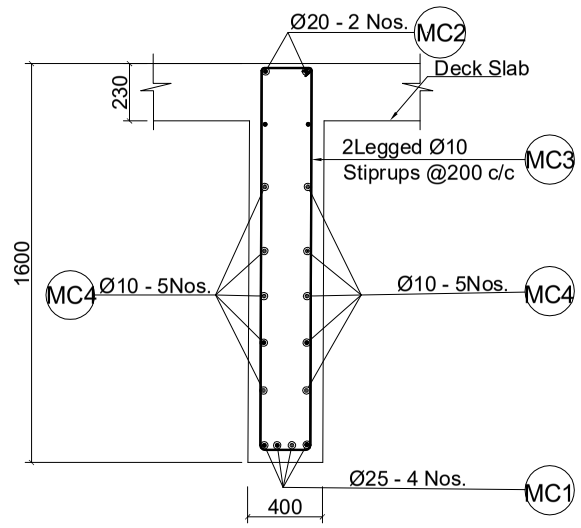

Section at A-A
Scale:-1:30

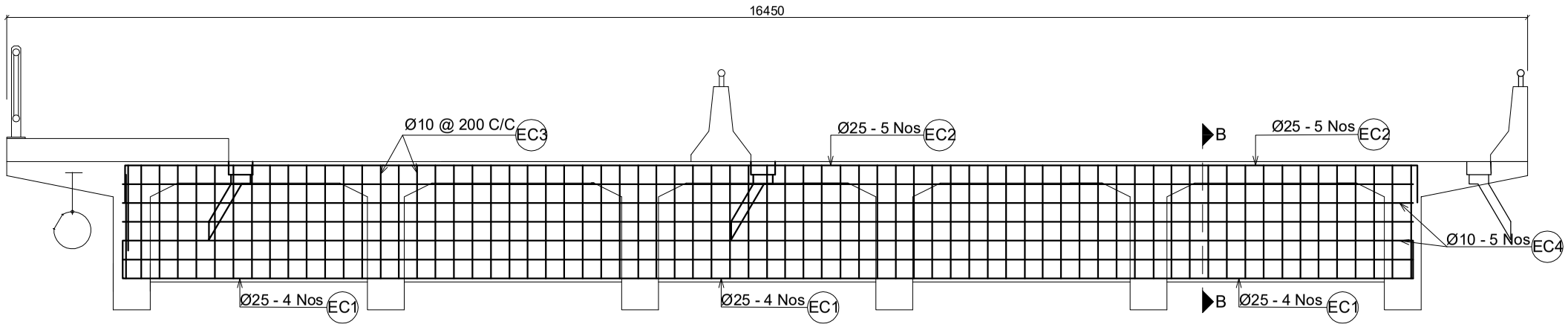

End Cross Girders
Scale:-1:60

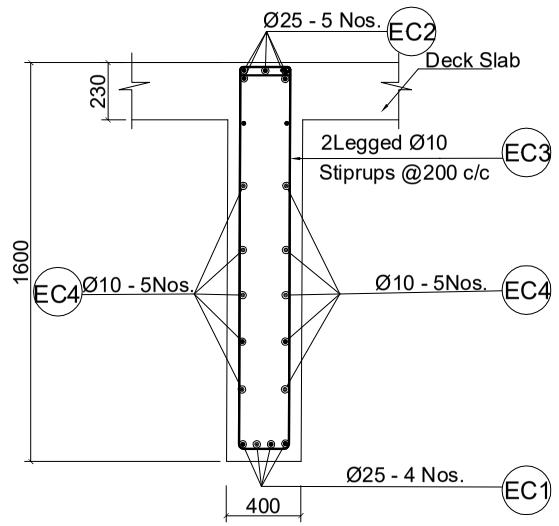

Section at B-B
Scale:-1:30

Government of Nepal Ministry of Physical Infrastructure and Transport **Department of Roads** **Project Directorate Office (ADB)** **SASEC Highway Improvement Project-** **Project Preparatory Consultant (SHIP-PPC)** **ADB Loan No: 3722-NEP**	**CONSULTANT:** Soosung Engineering Co. Ltd, Korea in association with ERMC P (Ltd) and T&T-Tech Studio of Engineeering Nepal	**IMPLEMENTING AGENCY:** **DOR, DCID** **ROAD NAME:** **East West Highway (H01)** **Butwal - Gorusinghe Section**	**SHEET TITLE:** Reinforcement Details of Girder of **Jitgadi Bridge** (46/H001/287_A,B)	**SCALE:** As Shown		**NAME**	**SIGNATURE**	**REV NO.**	**DESCRIPTION**	**DATE:** November , 2022 **DWG.NO.:** 287_Jitgadi **SHEET NO.:** 09/19
					Designed by:	Saroj Bhattarai				
					Checked by:	P. Upadhyaya				
					Approved by:	Dr. T.H.Choi				

BAR BENDING SCHEDULE OF DECK SLAB

BAR ID	SKETCH (mm)	SPACING (mm)	Ø OF BARS (mm)	NO. OF BARS	LENGTH (m)	WEIGHT/LENGTH (kg/m)	TOTAL WEIGHT (kg)
S1	14750 100	150/ 7Nos meter	12	152	14.950	0.888	2017.473
S2	16358 100	150/ 7Nos meter	12	152	16.560	0.888	2234.740
S2a	100 2150 Additional Bars At Left Cantilever	150 In Between S2	10	152	2.250	0.617	210.856
S2b	2150 100 Additional Bars At Right Cantilever	150 In Between S2	10	152	2.250	0.617	210.856
S3	22610 155	Med Deck 150	10	100	22.920	0.617	1413.107
		Left Cantilever 150	10	10	22.920	0.617	141.311
		Right Cantilever 150	10	10	22.920	0.617	141.311
S4	22610 155	150/ 7Nos Per Meter	10	111	22.920	0.617	1568.549
S4a	155 2600 Additional Bars At Left Deck End	150 In Between S4	10	111	2.755	0.617	188.541
S4b	2600 155 Additional Bars At Right Deck End	150 In Between S4	10	111	2.755	0.617	188.541
S6a	450 732 200	150	10	1410	1.380	0.617	1199.662
S7a	100 1095 200 Outer Side Of Left Exterior Girder	150/ 7Nos Per Meter	10	306	1.400	0.617	264.125
S7b	200 1095 100 Outer Side Of Right Exterior Girder	150/ 7Nos Per Meter	10	306	1.400	0.617	264.125
TOTAL EXCLUDING FOOTPATHS (in kg)							10043.198
TOTAL WEIGHT (IN METRIC TON)							10.043

BAR BENDING SCHEDULE FOR RCC MAIN GIRDER

BAR ID	SHAPE OF BAR IN mm (NOT TO SCALE)	Ø OF BARS (mm)	NO. OF BARS	LENGTH (m)	WEIGHT/LENGTH (Kg/m)	TOTAL WEIGHT (Kg)
MG1	400 22585 400	32	6	23.390	6.313	886.017
MG2	200 17300 200	32	2	17.700	6.313	223.493
MG3	200 13580 200	32	4	13.980	6.313	353.043
MG4	200 8080 200	32	4	8.480	6.313	214.149
MG5	22620	10	10	22.620	0.617	139.461
MG6	2*75 1510 310	10	104	3.790	0.617	243.015
MG7	320 Spacer Bar	32	38	0.320	6.313	76.770
TOTAL WEIGHT IN 1GIRDER						2135.949
TOTAL NUMBER OF GIRDERS AND TOTAL WEIGHT (IN METRIC TON)						2.136

BAR BENDING SCHEDULE FOR END CROSS GIRDERS

BAR ID	SKETCH (mm)	SPACING (mm)	Ø OF BARS (mm)	NO. OF BARS	LENGTH (m)	WEIGHT/LENGTH (kg/m)	TOTAL WEIGHT (kg)
EC1	400 14045 400		25	4	14.845	3.853	228.813
EC2	14045 400 400		25	5	14.845	3.853	286.016
EC3	2*60 1210 310	@ 200 c/c	10	72	3.160	0.617	140.275
EC4	14070 2X5 Nos each Face	0	10	10	14.070	0.617	86.747
TOTAL WEIGHT IN 1GIRDER(in kg)							741.851
TOTAL NUMBER OF GIRDERS AND TOTAL WEIGHT 2 (IN METRIC TON)							1.484

BAR BENDING SCHEDULE OF **FOOTHPATH**

BAR ID	SHAPE OF BAR IN mm (NOT TO SCALE)	SPACING (MM)	Ø OF BARS (mm)	NO. OF BARS	LENGTH (m)	WEIGHT/LENGTH (kG/m)	TOTAL WEIGHT (kG)
FP1	2320 2*100 400	150	12	152	5.640	0.888	761.107
FP2	22610	150	10	21	22.610	0.617	292.739
ONE SIDE							1053.846
TOTAL WEIGHT IN METRIC TON							1.054

BAR BENDING SCHEDULE FOR INTERMEDIATE CROSS GIRDERS

BAR ID	SKETCH (mm)	SPACING (mm)	Ø OF BARS (mm)	NO. OF BARS	LENGTH (m)	WEIGHT/LENGTH (kg/m)	TOTAL WEIGHT (kg)
MC1	400 13945 400		25	4	14.745	3.853	227.272
MC2	13945 400 400		20	2	14.745	2.466	72.727
MC3	2*60 1210 210	@ 200 c/c	10	69	2.960	0.617	125.922
MC4	13970 2X5 Nos Each Face		10	10	13.970	0.617	86.130
TOTAL WEIGHT IN 1GIRDER(in kg)							512.051
TOTAL NUMBER OF GIRDERS AND TOTAL WEIGHT 1 (IN METRIC TON)							0.512

Government of Nepal
Ministry of Physical Infrastructure and Transport
Department of Roads
Project Directorate Office (ADB)
SASEC Highway Improvement Project-
Project Preparatory Consultant (SHIP-PPC)
ADB Loan No: 3722-NEP

CONSULTANT: Soosung Engineering Co. Ltd, Korea in association with ERMC P (Ltd) and TSC-Tech Studio of Engineeering Nepal

IMPLEMENTING AGENCY: DOR, DCID

ROAD NAME: East West Highway (H01)

Butwal - Gorusinghe Section

SHEET TITLE: B.B.S of Slab & Girders of **Jitgadi Bridge** (46/H001/287_A,B)

SCALE: As Shown

	NAME	SIGNATURE	REV NO.	DESCRIPTION
Designed by:	Saroj Bhattarai			
Checked by:	P. Upadhyaya			
Approved by:	Dr. T.H.Choi			

DATE: November , 2022
DWG.NO.: 287_Jitgadi
SHEET NO.: 10/19

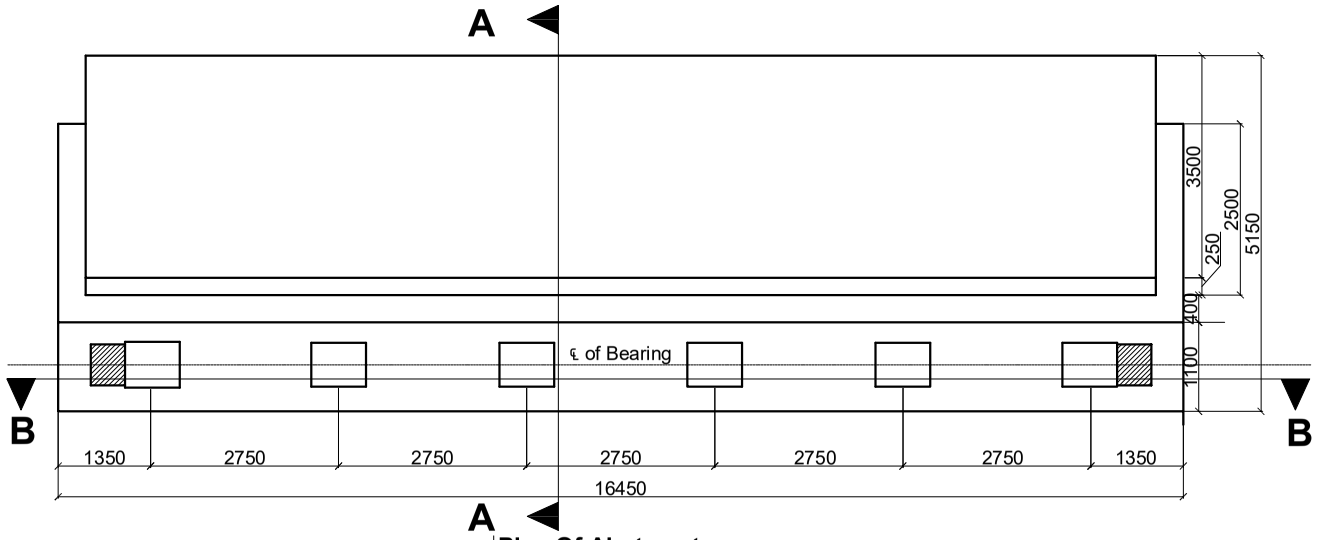

Plan Of Abutment
Scale:-1:100

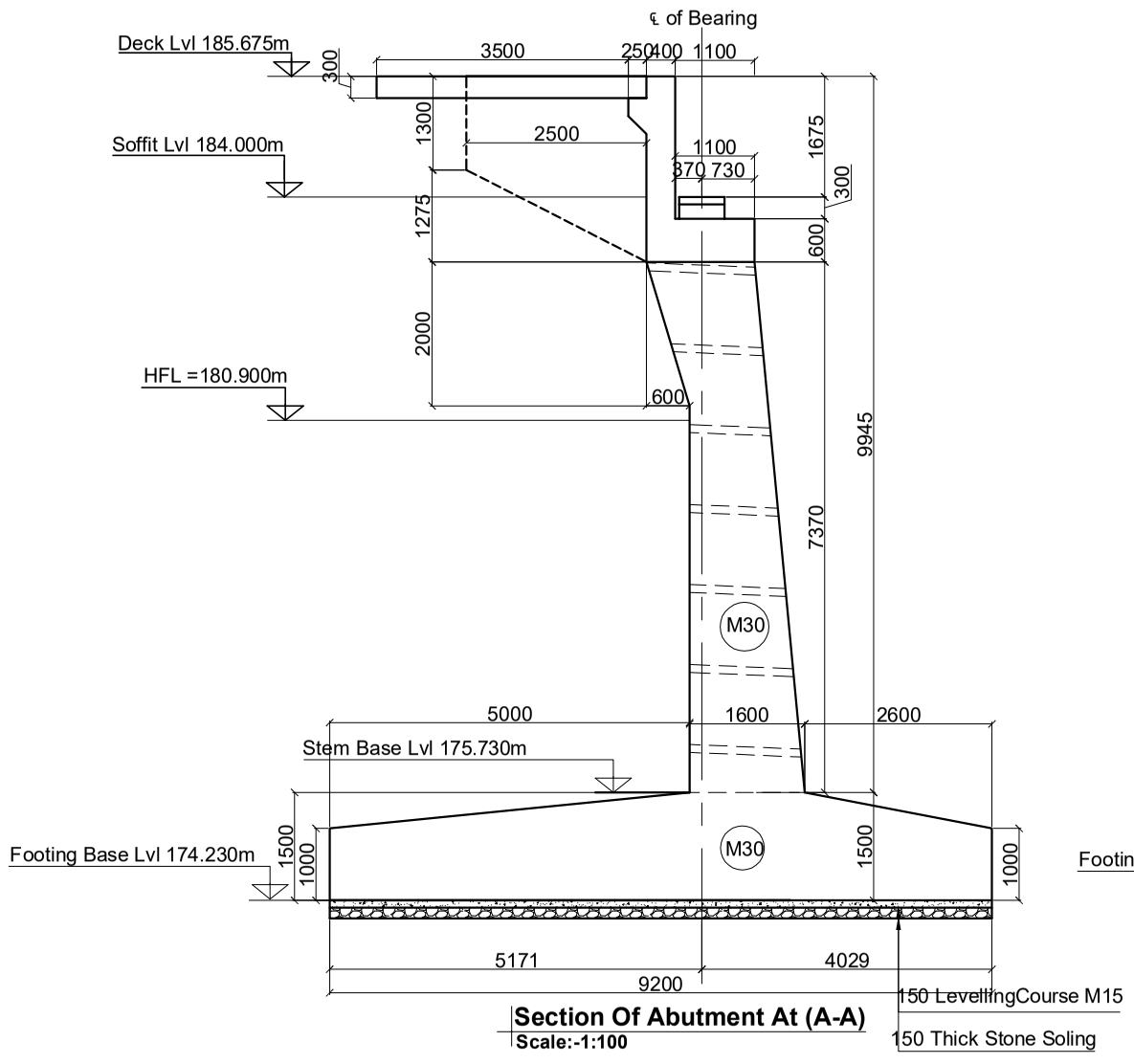

Section Of Abutment At (A-A)
Scale:-1:100

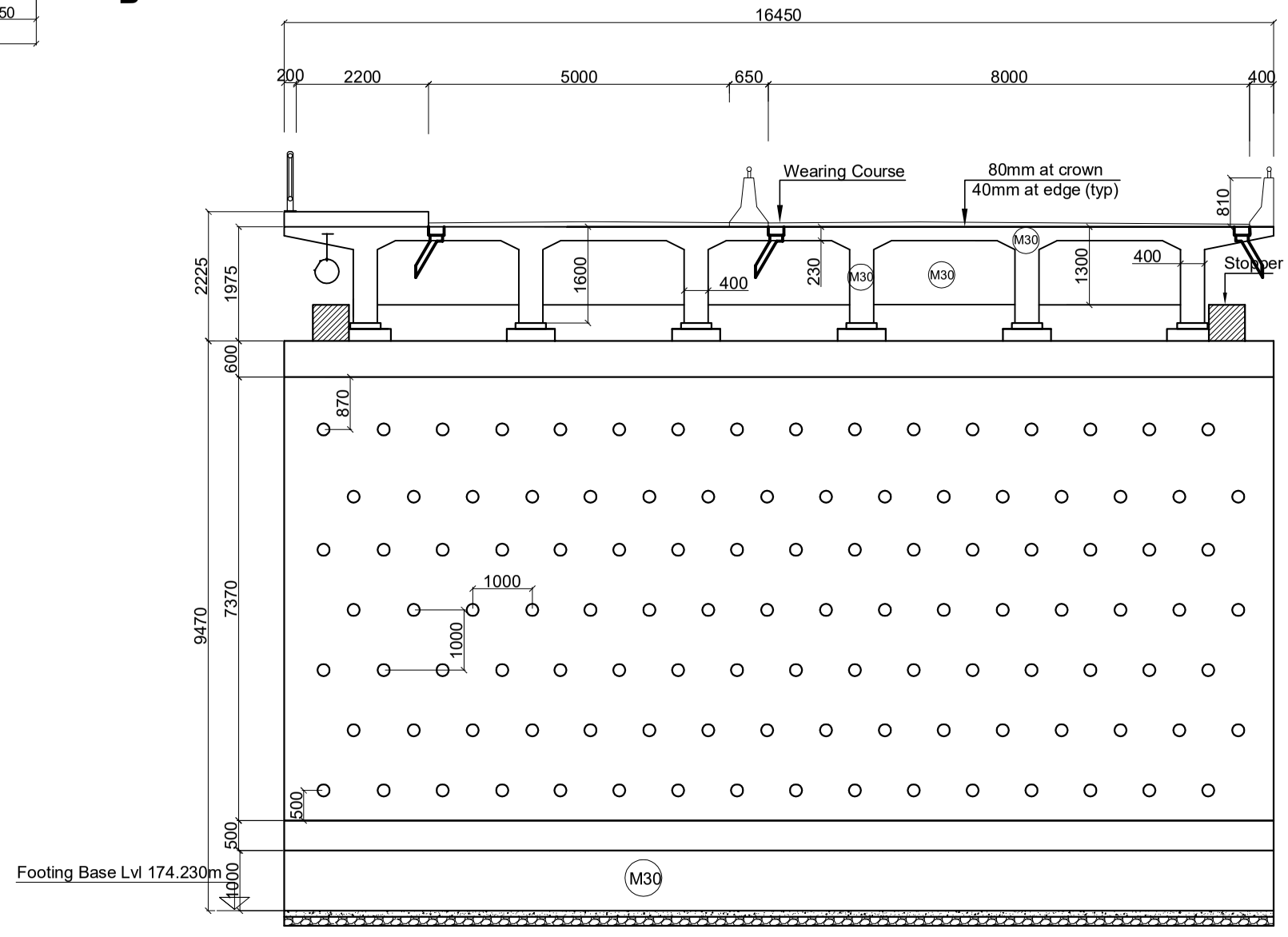

Section Of Abutment At (B-B)
Scale:-1:100

Government of Nepal Ministry of Physical Infrastructure and Transport **Department of Roads** **Project Directorate Office (ADB)** **SASEC Highway Improvement Project-** **Project Preparatory Consultant (SHIP-PPC)** **ADB Loan No: 3722-NEP**	**CONSULTANT:** Soosung Engineering Co. Ltd, Korea in association with ERMC P (Ltd) and TSE-Tech Studio of Engineeering Nepal	**IMPLEMENTING AGENCY:** **DOR, DCID** **ROAD NAME:** **East West Highway (H01)** **Butwal - Gorusinghe Section**	**SHEET TITLE:** Detail of Abutment of **Jitgadi Bridge** (46/H001/287_A,B)	**SCALE:** As Shown		**NAME**	**SIGNATURE**	**REV NO.**	**DESCRIPTION**	**DATE:** November , 2022 **DWG.NO.:** 287_Jitgadi **SHEET NO.:** 11/19
					Designed by:	Saroj Bhattarai				
					Checked by:	P. Upadhyaya				
					Approved by:	Dr. T.H.Choi				

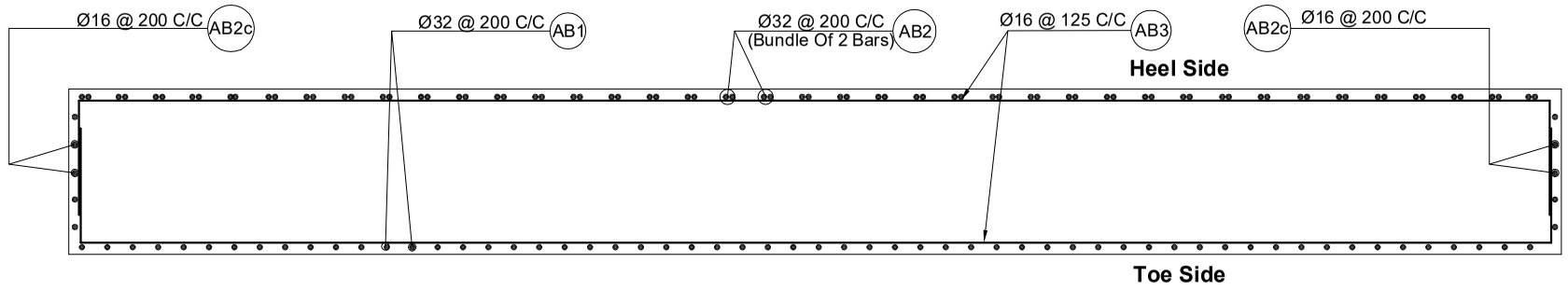

Section at A-A
Scale:-1:50

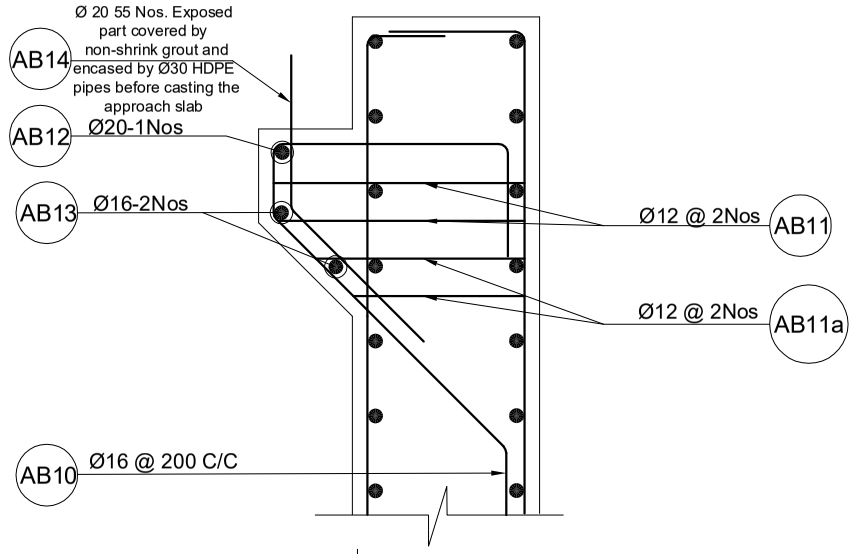

Detail At A
Scale:-1:20

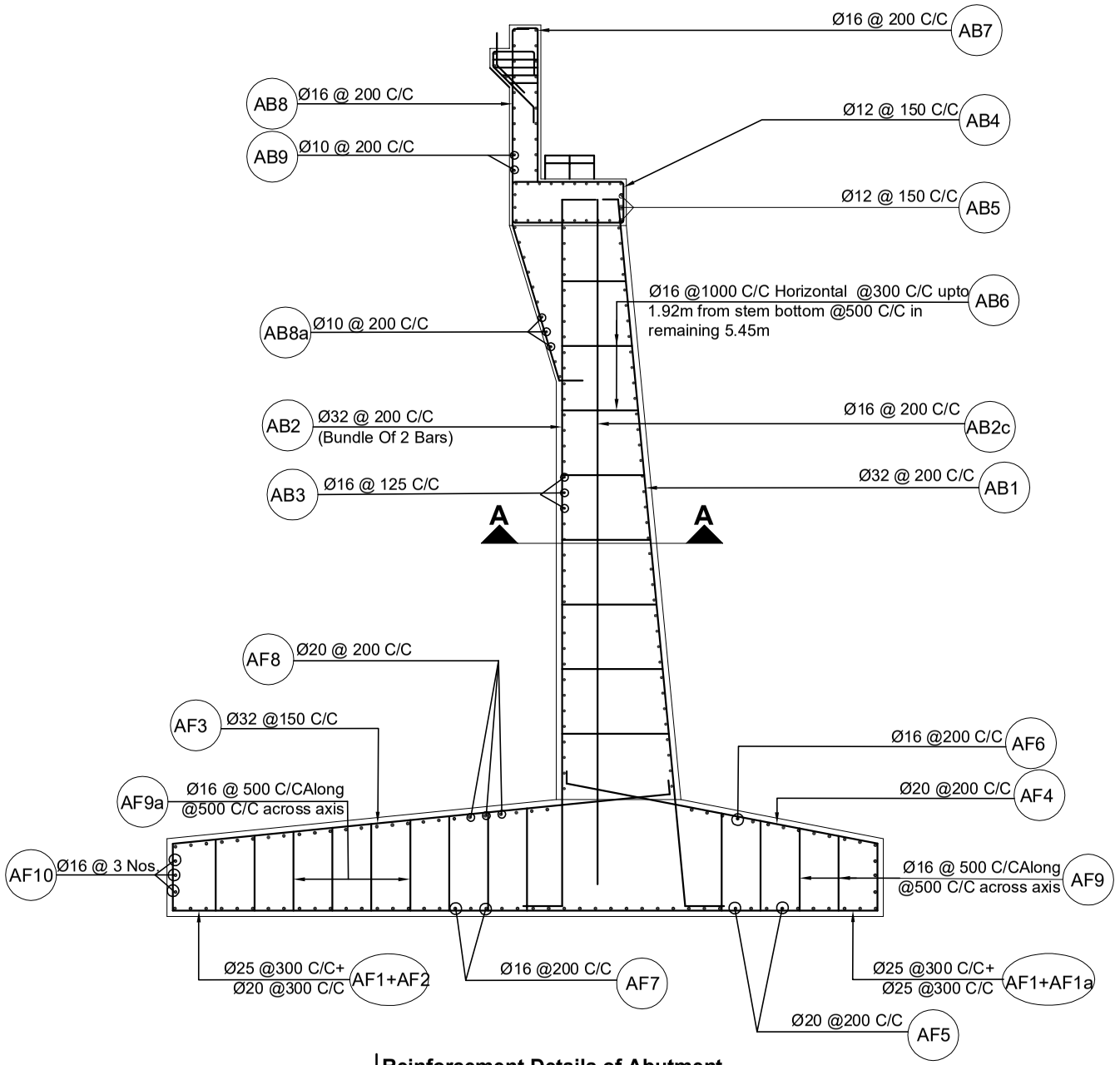

Reinforcement Details of Abutment
Scale:-1:75

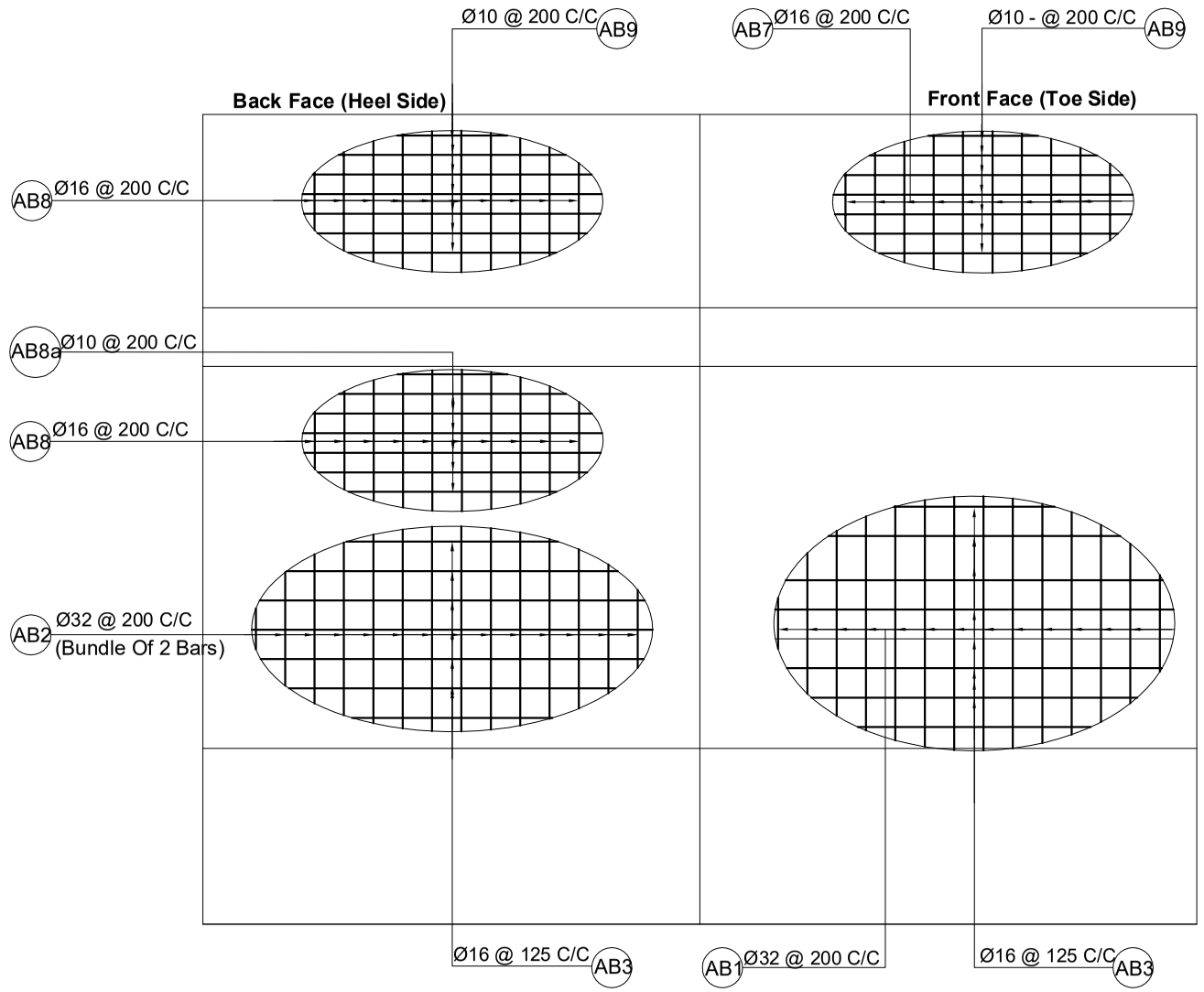

Reinforcement Details Of Abutment
Scale:-1:75

Government of Nepal Ministry of Physical Infrastructure and Transport **Department of Roads** **Project Directorate Office (ADB)** **SASEC Highway Improvement Project-** **Project Preparatory Consultant (SHIP-PPC)** **ADB Loan No: 3722-NEP**	**CONSULTANT:** Soosung Engineering Co. Ltd, Korea in association with ERMC P (Ltd) and TK-Tech Studio of Engineeering Nepal	**IMPLEMENTING AGENCY:** **DOR, DCID** **ROAD NAME:** **East West Highway (H01)** **Butwal - Gorusinghe Section**	**SHEET TITLE:** Reinforcement Details of Abutment of **Jitgadi Bridge** (46/H001/287_A,B)	**SCALE:** As Shown		**NAME**	**SIGNATURE**	**REV NO.**	**DESCRIPTION**	**DATE:** November , 2022 **DWG.NO.:** 287_Jitgadi **SHEET NO.:** 12/19
					Designed by:	Saroj Bhattarai				
					Checked by:	P. Upadhyaya				
					Approved by:	Dr. T.H.Choi				

BAR BENDING SCHEDULE OF ABUTMENT

BAR ID	SHAPE OF BAR IN mm (NOT TO SCALE)	SPACING (MM)	Ø OF BARS (mm)	NO. OF BARS	LENGTH (m)	WEIGHT/LENGTH (kG/m)	TOTAL WEIGHT (kG)
AB1	300; 9251; 94; 500	200	32	83	10.051	6.313	5266.813
AB2	500; 9251; 500	200	32	166	10.251	6.313	10743.229
AB2c	9250; 500	200	16	16	9.750	1.578	246.221
AB3	16285; average 1400; 16285	125	16	60	35.370	1.578	3349.553
AB4	2*100; 515; 1340	150	12	111	3.910	0.888	385.321
AB5	16300	150	12	24	16.300	0.888	347.314
AB6	Length Varies 1470-770; Spacing; Hook Length 100; 1000 C/C horizontal; 300 C/C vertical upto 1.92m from stem bottom; 500 C/C vertical at remaining 5.45m		16	324	1.448	1.578	740.481
AB7	260; 2575; 300	200	16	83	3.135	1.578	410.692
AB8	260; 2505; 2088; 300	200	16	83	5.153	1.578	675.054
AB8a	16300	200	10	12	16.300	0.617	120.595
AB9	16300; 268	200	10	11	33.136	0.617	224.726
AB10	510; 300; 110; 655; 200	200	16	79	1.775	1.578	221.323
AB11	510; 200; 200		12	158	0.910	0.888	127.650
AB11a	255 average; 200; 200		12	158	0.650	0.888	91.179
AB12	16310		20	1	16.310	2.466	40.223
AB13	16310		16	2	16.310	1.578	51.485
AB14	400; 500		20	55	0.900	2.466	122.075
TOTAL WEIGHT IN ONE ABUTMENT							23163.934
TOTAL WEIGHT IN METRIC TON							23.164

BAR BENDING SCHEDULE FOR ABUTMENT FOUNDATION

BAR ID	SHAPE OF BAR IN mm (NOT TO SCALE)	SPACIN G (mm)	Ø OF BARS (mm)	NO. OF BARS	LENGTH (m)	WEIGHT/LENGTH (Kg/m)	TOTAL WEIGHT (Kg)
AF1	670; 9025; 670	300	25	56	10.365	3.853	2236.649
AF1(a)	300; 3380; 670; Alternate AF1 Curtailed	300	25	56	4.570	3.853	986.154
AF2	670; 6600; 200; Additional Alternate Bars at heel bottom	300	20	56	7.470	2.466	1031.642
AF3	0; 6550; 670	150	32	110	7.220	6.313	5014.070
AF4	4175; 670	150	20	110	4.845	2.466	1314.338
AF5	600; 16280; Distribution bars toe bottom	200	20	18	17.480	2.466	775.951
AF6	16280; 600; Distribution bars toe top	200	16	15	17.480	1.578	413.841
AF7	16280; 600; Distribution bars heel bottom	200	16	30	17.480	1.578	827.681
AF8	8830; 600; Distribution bars heel top	200	20	27	17.480	2.466	1163.927
AF9	1270-770; Curve length = 130; Curve radius = 40; Hook length = 80; Shear link Heel Side		16	238	1.440	1.578	540.929
AF9a	1270-770; Curve length = 130; Curve radius = 40; Hook length = 80; Shear link Heel Side		16	374	1.440	1.578	849.848
AF10	8850; 7450	0	16	3	50.700	1.578	240.065
TOTAL IN PILE OF ONE ABUTMENT							15155.030
TOTAL WEIGHT (IN METRIC TON)							15.155

BAR BENDING SCHEDULE OF WING WALL

BAR ID	SHAPE OF BAR IN mm (NOT TO SCALE)	SPACING (MM)	Ø OF BARS (mm)	NO. OF BARS	LENGTH (m)	WEIGHT/LENGTH (kG/m)	TOTAL WEIGHT (kG)
R1	400; 2785; 1200		20	8	4.380	2.466	86.414
R2	300; 1250; 2810		16	8	4.360	1.578	55.052
R3	2800; 320; 2*150		16	14	6.540	1.578	144.513
R4	Avg 1350; 320; 2*150		16	14	3.640	1.578	80.432
R5	182; Avg 1938		10	22	4.710	0.617	63.886
R6	320		20	2	0.320	2.466	1.578
R7	2400		10	4	2.400	0.617	5.919
R8	350; 250		10	13	1.320	0.617	10.580
TOTAL IN 2 WING WALL IN ONE ABUTMENT							448.374
TOTAL WEIGHT IN METRIC TON							0.448

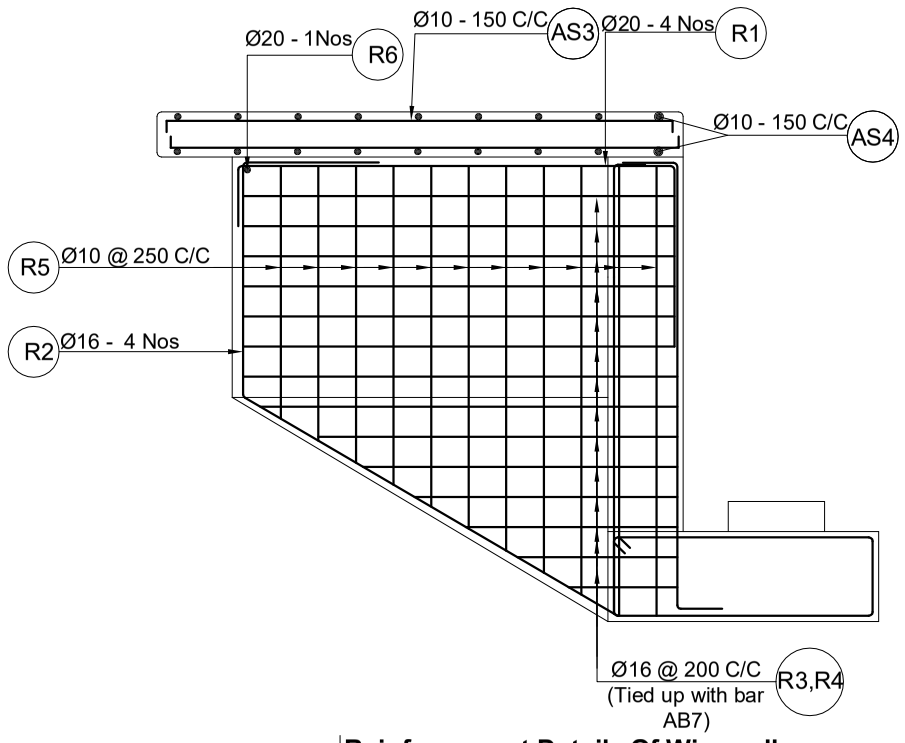

Reinforcement Details Of Wingwall
Scale:-1:50

Government of Nepal Ministry of Physical Infrastructure and Transport **Department of Roads** **Project Directorate Office (ADB)** **SASEC Highway Improvement Project-** **Project Preparatory Consultant (SHIP-PPC)** **ADB Loan No: 3722-NEP**	**CONSULTANT:** Soosung Engineering Co. Ltd, Korea in association with ERMC P (Ltd) and TE-Tech Studio of Engineeering Nepal	**IMPLEMENTING AGENCY:** **DOR, DCID** **ROAD NAME:** **East West Highway (H01)** **Butwal - Gorusinghe Section**	**SHEET TITLE:** B B S & Details of Abutment of **Jitgadi Bridge** (46/H001/287_A,B)	**SCALE:** As Shown		**NAME**	**SIGNATURE**	**REV NO.**	**DESCRIPTION**	**DATE:** November , 2022
					Designed by:	Saroj Bhattarai				**DWG.NO.:** 287_Jitgadi
					Checked by:	P. Upadhyaya				
					Approved by:	Dr. T.H.Choi				**SHEET NO.:** 13/19

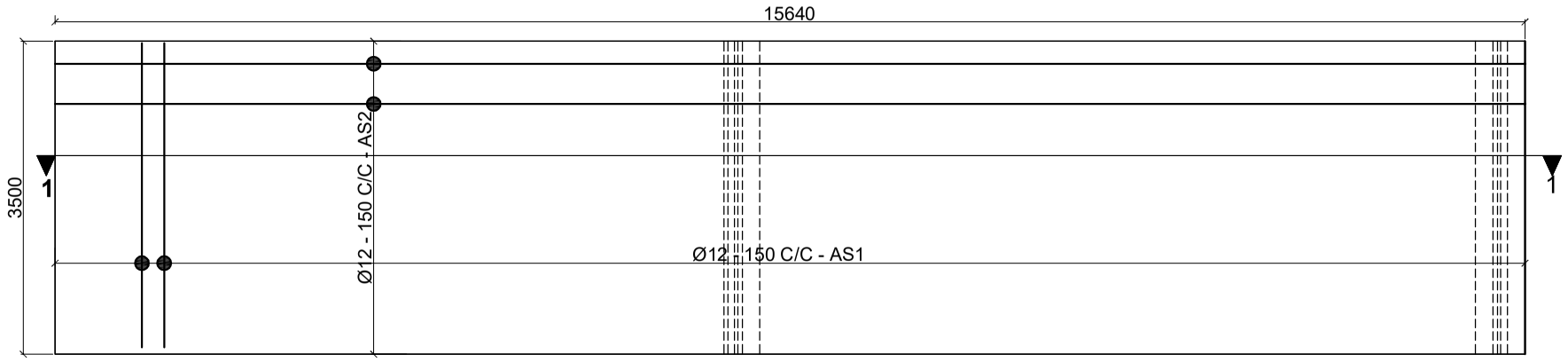

Plan of Reinforcement Details of Approach Slab
Scale:-1:75

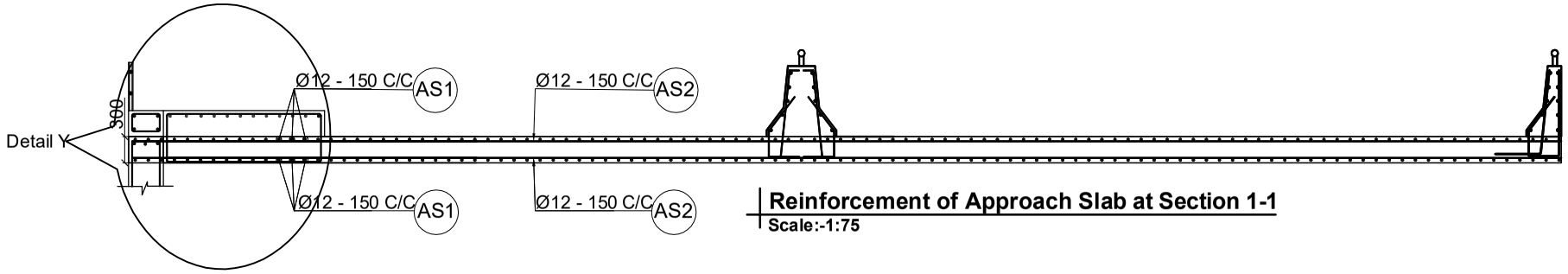

Reinforcement of Approach Slab at Section 1-1
Scale:-1:75

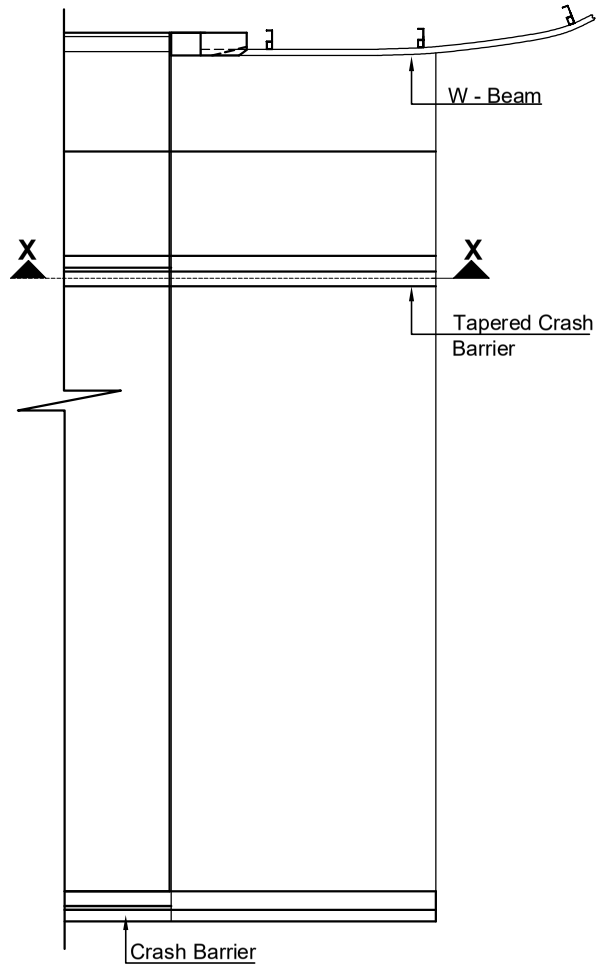

Plan of Approach Slab
Not to Scale

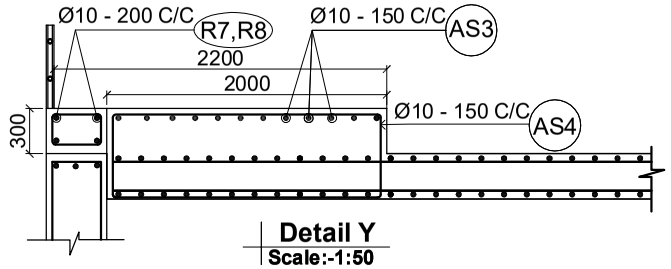

Detail Y
Scale:-1:50

BAR BENDING SCHEDULE OF APPROACH SLAB

BAR ID	SHAPE OF BAR IN mm (NOT TO SCALE)	SPACING (mm)	Ø OF BARS (mm)	NO. OF BARS	LENGTH (m)	WEIGHT/LENGTH (Kg/m)	TOTAL WEIGHT (Kg)
AS1	3400	-	12	210	3.400	0.888	633.901
AS2	15550	-	12	48	15.550	0.888	662.666
AS3	3400		10	15	3.400	0.617	31.443
AS4	1920 / 520		10	18	5.000	0.617	55.489
TOTAL IN ONE APPROACH SLAB							1296.567
TOTAL WEIGHT IN METRIC TON							1.297

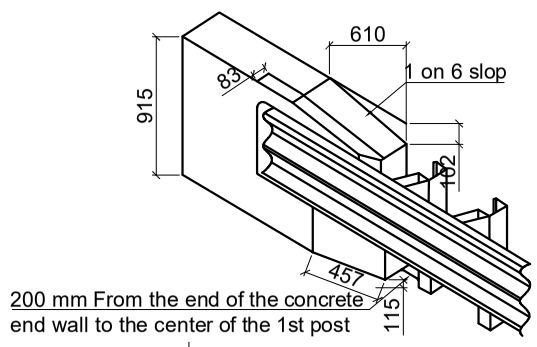

End Block Part Details
Scale:-1:50

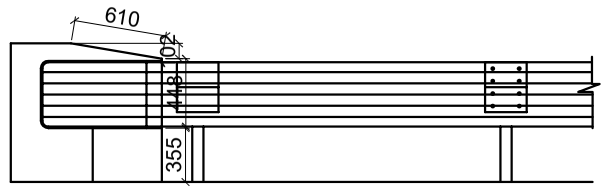

Eleavation
Scale:-1:50

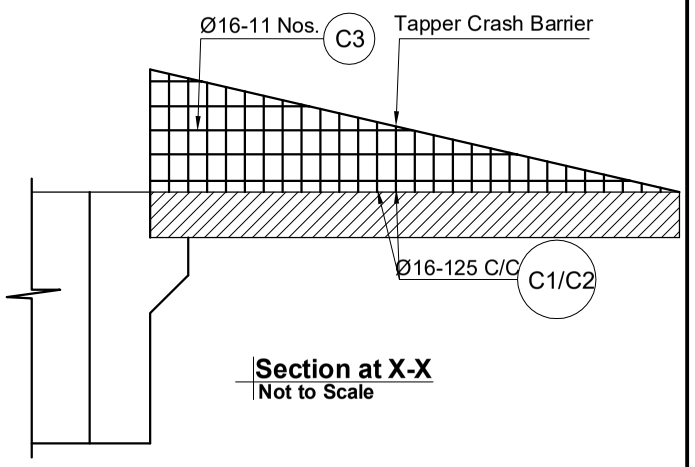

Section at X-X
Not to Scale

Government of Nepal Ministry of Physical Infrastructure and Transport **Department of Roads** **Project Directorate Office (ADB)** **SASEC Highway Improvement Project-** **Project Preparatory Consultant (SHIP-PPC)** **ADB Loan No: 3722-NEP**	**CONSULTANT:** Soosung Engineering Co. Ltd, Korea in association with ERMC P (Ltd) and TE-Tech Studio of Engineeering Nepal	**IMPLEMENTING AGENCY:** **DOR, DCID** **ROAD NAME:** **East West Highway (H01)** **Butwal - Gorusinghe Section**	**SHEET TITLE:** Reinforcement Details of Approach Slab of **Jitgadi Bridge** (46/H001/287_A,B)	**SCALE:** As Shown		**NAME**	**SIGNATURE**	**REV NO.**	**DESCRIPTION**	**DATE:** November , 2022 **DWG.NO.:** 287_Jitgadi **SHEET NO.:** 14/19
					Designed by:	Saroj Bhattarai				
					Checked by:	P. Upadhyaya				
					Approved by:	Dr. T.H.Choi				

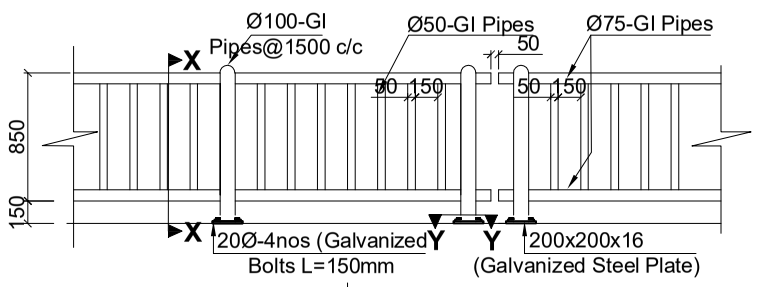

Railing Post Details
Scale:-1:50

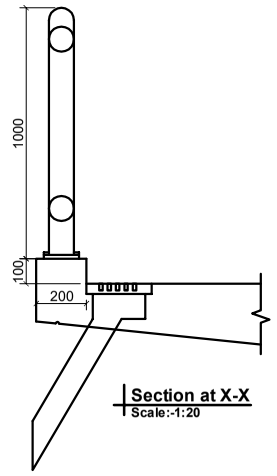

Section at X-X
Scale:-1:20

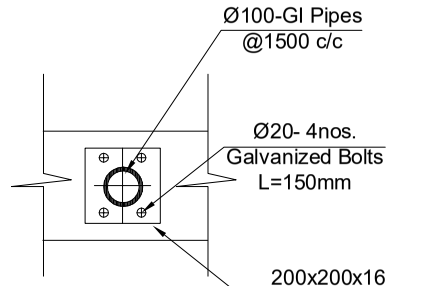

Section at Y-Y
Scale:-1:20

BAR BENDING SCHEDULE OF CENTRAL CRASH BARRIER(For1m)							
BAR ID	SHAPE OF BAR IN mm (NOT TO SCALE)	SPACING (MM)	Ø OF BARS (mm)	NO. OF BARS	LENGTH (m)	WEIGHT/LENGTH (kG/m)	TOTAL WEIGHT (kG)
C1	575, 250, 555	125	16	8	2.210	1.578	27.905
C2	915, 730	125	16	16	1.580	1.578	39.900
C3	960		16	11	0.960	1.578	16.667
TOTAL FOR 1M							84.473
TOTAL FOR 1.0M IN MT							0.084

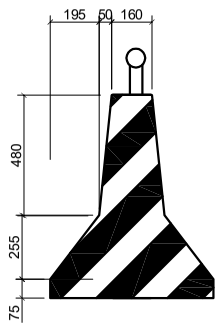

Painting Work on The Bridge Deck
Scale:-1:20

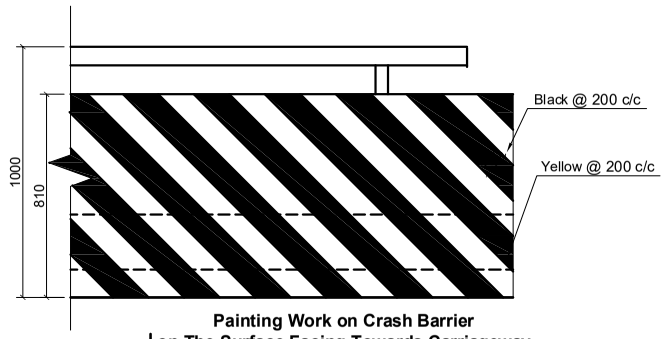

Painting Work on Crash Barrier on The Surface Facing Towards Carriageway
Scale:-1:20

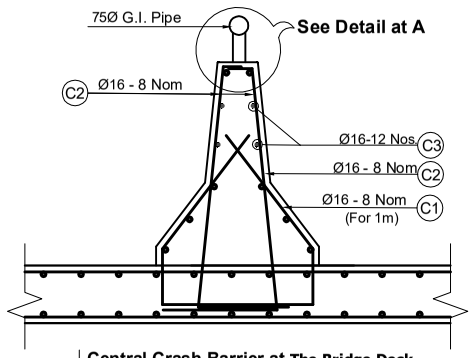

Central Crash Barrier at The Bridge Deck
Scale:-1:20

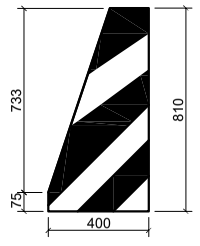

Painting Work on Tapper Crash Barrier
Scale:-1:20

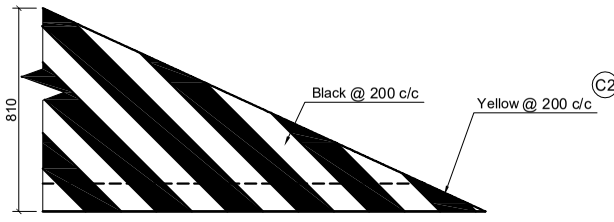

Painting Work on Crash Barrier on The Surface Facing Towards Carriageway
Scale:-1:20

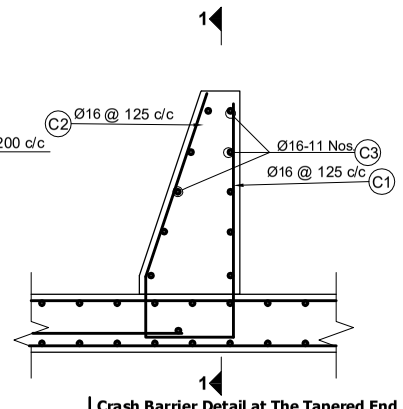

Crash Barrier Detail at The Tapered End
Scale:-1:20

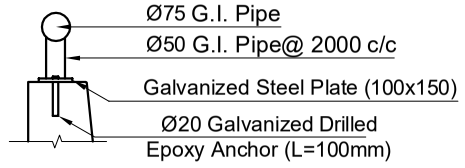

Details at- A-A
Scale:-1:20

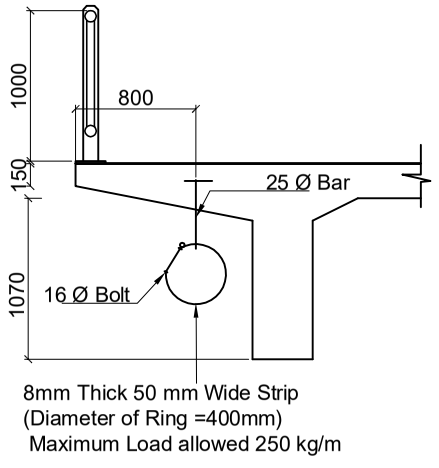

Utility hanger Detail
Scale:-1:50

BAR BENDING SCHEDULE OF CRASH BARRIER (For 1m)							
BAR ID	SHAPE OF BAR IN mm (NOT TO SCALE)	SPACING (MM)	Ø OF BARS (mm)	NO. OF BARS	LENGTH (m)	WEIGHT/LENGTH (kG/m)	TOTAL WEIGHT (kG)
C1	575, 928, 225, 304	125	16	8	2.030	1.578	25.632
C2	915, 500	125	16	8	1.415	1.578	17.867
C3	960		16	11	0.960	1.578	16.667
TOTAL FOR 1M							60.166
TOTAL FOR 1.0M IN MT							0.060

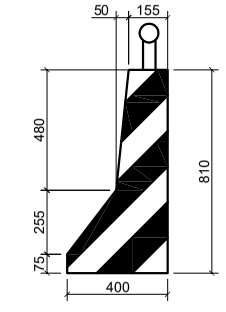

Painting Work on Crash Barrier
Scale:-1:20

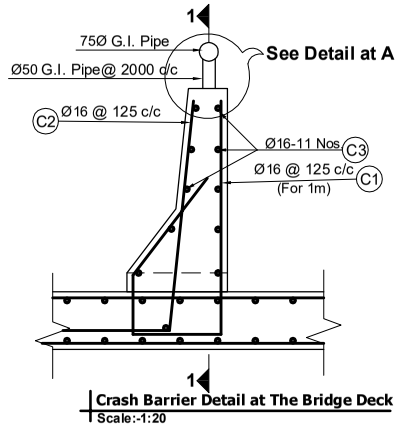

Crash Barrier Detail at The Bridge Deck
Scale:-1:20

NOTES:
The crash barrier shall be sloped at both ends of the bridge as shown and the reinforcement shall be adjusted according to the slope.

Government of Nepal Ministry of Physical Infrastructure and Transport **Department of Roads** **Project Directorate Office (ADB)** **SASEC Highway Improvement Project-** **Project Preparatory Consultant (SHIP-PPC)** **ADB Loan No: 3722-NEP**	**CONSULTANT:** Soosung Engineering Co. Ltd, Korea in association with ERMC P (Ltd) and TE-Tech Studio of Engineeering Nepal	**IMPLEMENTING AGENCY:** **DOR, DCID** **ROAD NAME:** **East West Highway (H01)** **Butwal - Gorusinghe Section**	**SHEET TITLE:** Miscellaneous Details - 1 of **Jitgadi Bridge** (46/H001/287_A,B)	**SCALE:** As Shown		**NAME**	**SIGNATURE**	**REV NO.**	**DESCRIPTION**	**DATE:** November , 2022 **DWG.NO.:** 287_Jitgadi **SHEET NO.:** 15/19
					Designed by:	Saroj Bhattarai				
					Checked by:	P. Upadhyaya				
					Approved by:	Dr. T.H.Choi				

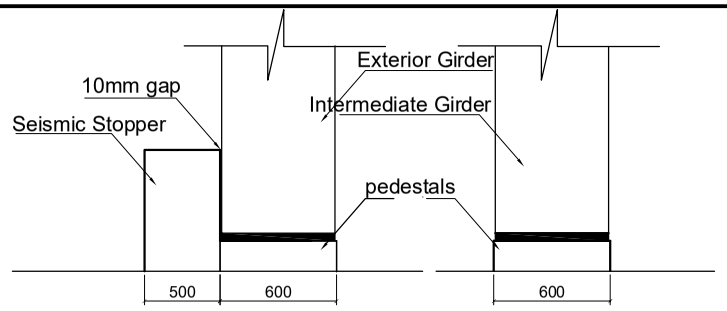

Abutment/Pier Cap With Stopper
Scale:-1:50

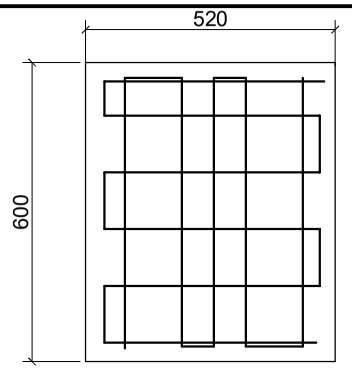

Pedestal Plan
Scale:-1:20

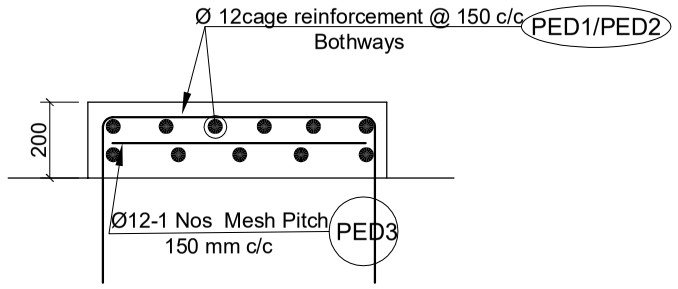

Pedestal Section
Scale:-1:20

NOTE:
To match the height of ballast wall, the pedestal thickness shall be suitably modified.

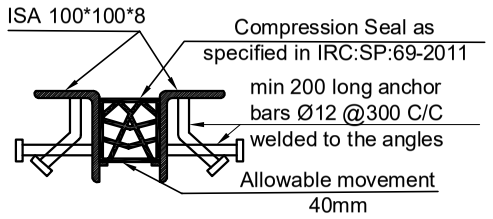

Compression seal type Expansion joints
Scale:-1:5

Lateral stiffness corresponding to overall area and total thickness of elastomer = 2286 N/mm

BAR BENDING SCHEDULE OF PEDESTAL							
BAR ID	SHAPE OF BAR IN mm (NOT TO SCALE)	SPACING (MM)	Ø OF BARS (mm)	NO. OF BARS	LENGTH (m)	WEIGHT/LENGTH (kG/m)	TOTAL WEIGHT (kG)
PED1	500, 560, 200		12	4	2.280	0.888	8.097
PED2	420, 560, 200		12	6	2.200	0.888	11.719
PED3	488, 408, Pitch 150 bothway, 1 layer		12	1	4.600	0.888	4.084
TOTAL WEIGHT IN KG							23.900
TOTAL WEIGHT IN MT							0.024

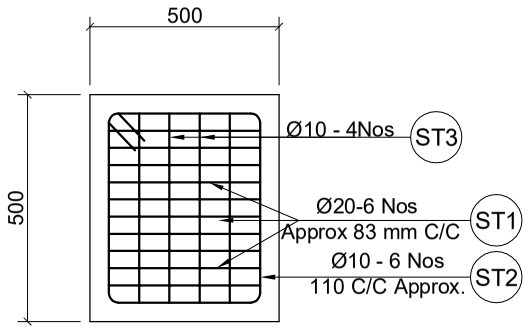

Stoppers Plan
Scale:-1:20

Notes on Elastomeric Bearings
The dimensions and properties of the bearings shown are tentative, based on IRC:83-2018, Part II, Table B2. The actual design shall be carried out by the manufacturer on the basis of provided load & deformation data. The effective stiffness shall not exceed the shown value.

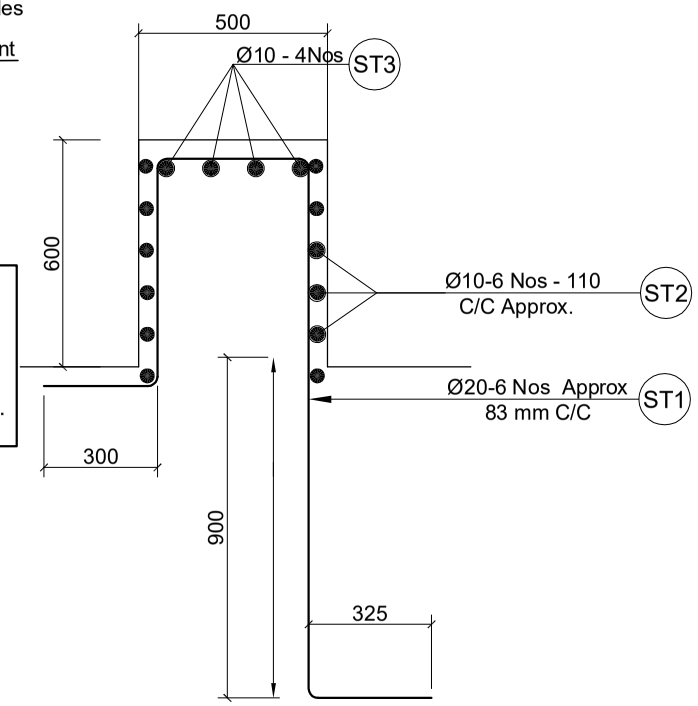

Stoppers Details
Scale:-1:20

BAR BENDING SCHEDULE OF STOPPER							
BAR ID	SHAPE OF BAR IN mm (NOT TO SCALE)	SPACING (MM)	Ø OF BARS (mm)	NO. OF BARS	LENGTH (m)	WEIGHT/LENGTH (kG/m)	TOTAL WEIGHT (kG)
ST1	400, 600, 1500, 300, 300		20	6	3.100	2.466	45.871
ST2	420, 100, 400		10	6	1.840	0.617	6.807
ST3	400		10	4	0.400	0.617	0.986
TOTAL WEIGHT IN KG							53.664
TOTAL WEIGHT IN MT							0.054

(In Case of Elastomeric Bearing)	All Loads Unfactored
Maximum permanent and superimposed dead loads	482.4 kN
Maximum load from surfacing (wearing course)	30.7 kN
Maximum live load reaction (including impact)	550.3 kN
Maximum horizontal seismic force	87 kN
Maximum braking force	88.6 kN
Total Maximum elongation of the deck	8 mm
Maximum Rotation due to dead load _	0.0023 rad
Maximum rotation due to dead load + live load _	0.0038 rad
Concrete for superstructure	M 30
Concrete for substructure	M25/M30
Width of girder at bearings	400 mm
Length of bearing along bridge axis (Assumed length)	320 mm

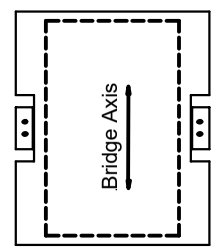

Elastomatric Bearing
Scale:-1:25

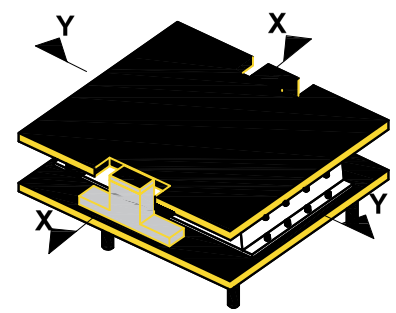

Elastrometric Bearing
(partially free at longitudal direction
Fixed at Transverse direction)

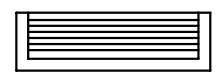

Section X-X
Scale:-1:25

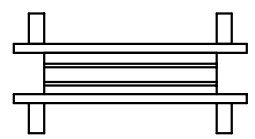

Section Y-Y
Scale:-1:25

Government of Nepal Ministry of Physical Infrastructure and Transport **Department of Roads** **Project Directorate Office (ADB)** **SASEC Highway Improvement Project-** **Project Preparatory Consultant (SHIP-PPC)** **ADB Loan No: 3722-NEP**	**CONSULTANT:** Soosung Engineering Co. Ltd, Korea in association with ERMC P (Ltd) and TTE-Tech Studio of Engineeering Nepal	**IMPLEMENTING AGENCY:** **DOR, DCID** **ROAD NAME:** **East West Highway (H01)** **Butwal - Gorusinghe Section**	**SHEET TITLE:** Miscellaneous Details - 2 of **Jitgadi Bridge** (46/H001/287_A,B)	**SCALE:** As Shown		**NAME**	**SIGNATURE**	**REV NO.**	**DESCRIPTION**	**DATE:** November , 2022 **DWG.NO.:** 287_Jitgadi **SHEET NO.:** 16/19
					Designed by:	Saroj Bhattarai				
					Checked by:	P. Upadhyaya				
					Approved by:	Dr. T.H.Choi				

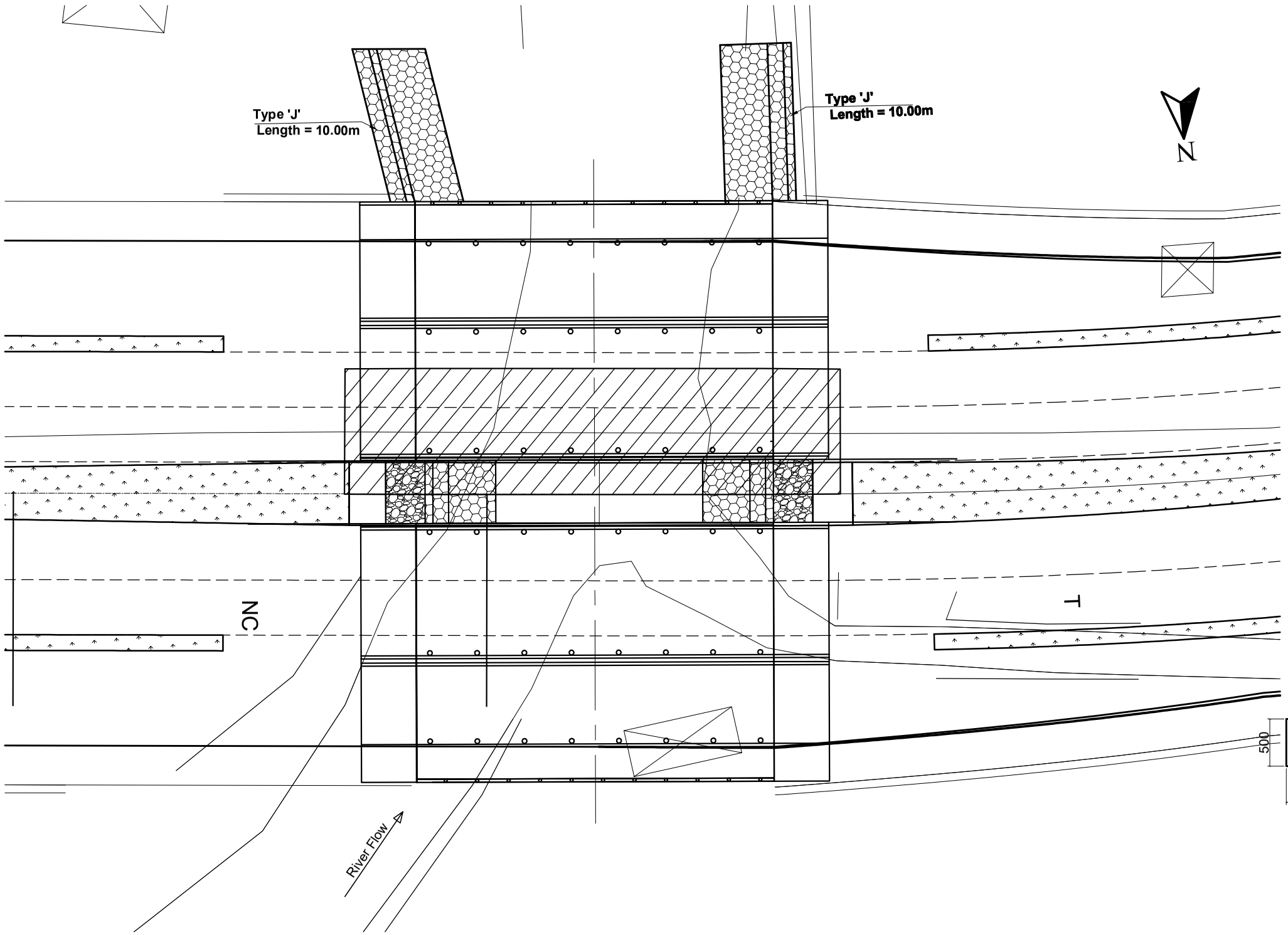

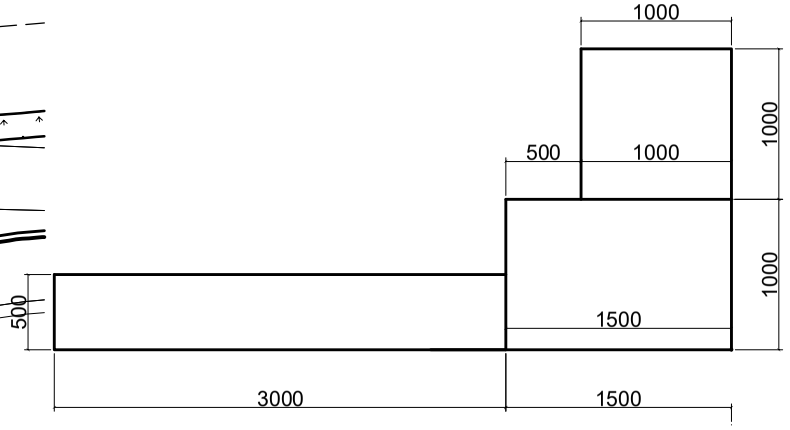

"J" Type River Training Structure
Scale:-1:50

Government of Nepal Ministry of Physical Infrastructure and Transport **Department of Roads** **Project Directorate Office (ADB)** **SASEC Highway Improvement Project-** **Project Preparatory Consultant (SHIP-PPC)** **ADB Loan No: 3722-NEP**	**CONSULTANT:** Soosung Engineering Co. Ltd, Korea in association with ERMC P (Ltd) and TSE-Tech Studio of Engineeering Nepal	**IMPLEMENTING AGENCY:** **DOR, DCID** **ROAD NAME:** **East West Highway (H01)** **Butwal - Gorusinghe Section**	**SHEET TITLE:** River Training Work of **Jitgadi Bridge** (46/H001/287_A,B)	**SCALE:** As Shown		**NAME**	**SIGNATURE**	**REV NO.**	**DESCRIPTION**	**DATE:** November , 2022 **DWG.NO.:** 287_Jitgadi **SHEET NO.:** 16.1/19
					Designed by:	Saroj Bhattarai				
					Checked by:	P. Upadhyaya				
					Approved by:	Dr. T.H.Choi				

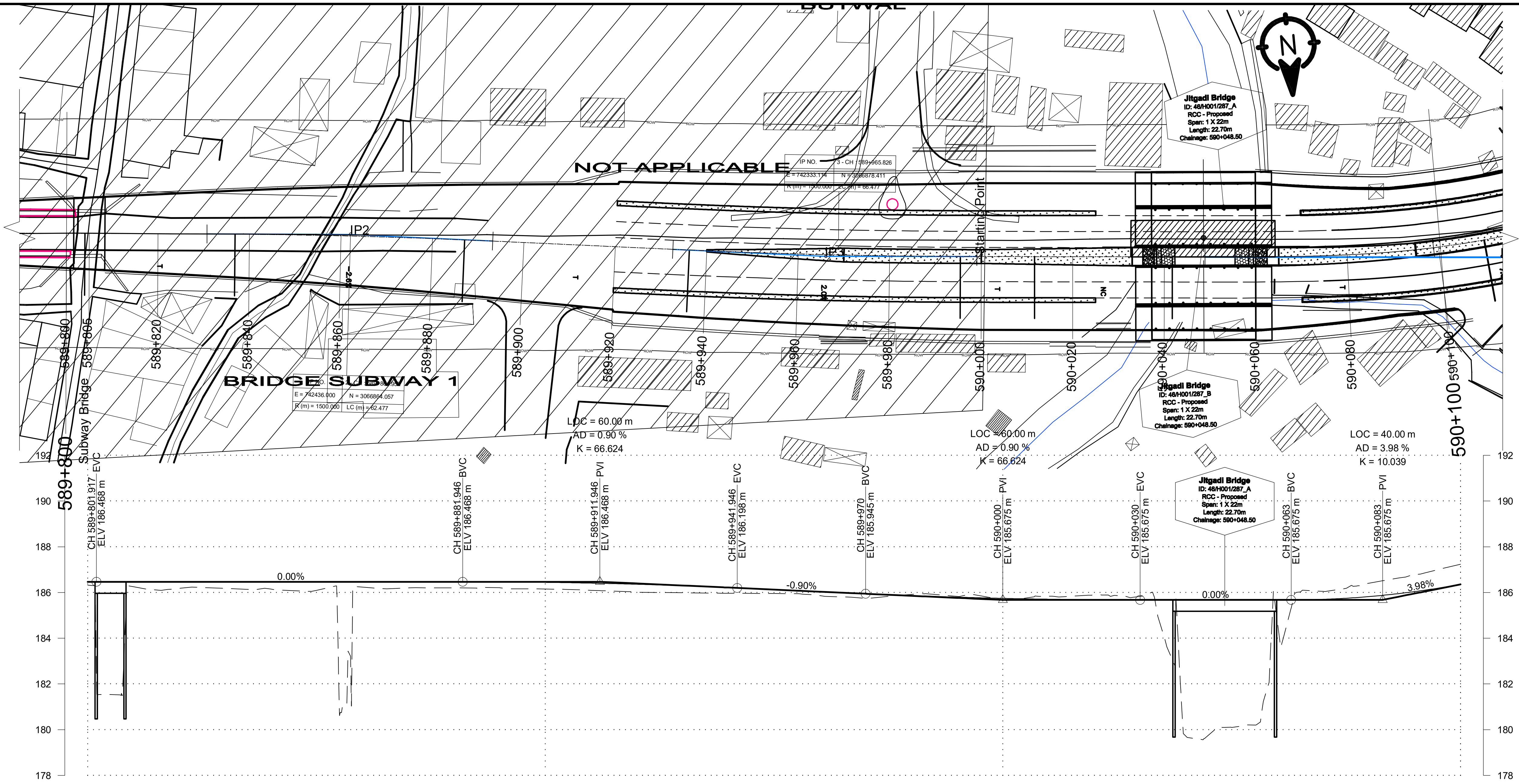

CHAINAGE(Km)	EXISTING LEVEL(m)	DESIGN LEVEL(m)
589+800	186.324	186.469
589+810	186.251	186.468
589+820	186.178	186.468
589+830	186.182	186.468
589+840	186.149	186.468
589+850	186.093	186.468
589+860	186.233	186.468
589+870	186.201	186.468
589+880	186.201	186.468
589+890	186.207	186.463
589+900	186.152	186.444
589+910	186.095	186.409
589+920	186.018	186.359
589+930	185.987	186.295
589+940	185.967	186.215
589+950	185.955	186.125
589+960	185.859	186.035
589+970	185.739	185.945
589+980	185.914	185.863
589+990	185.826	185.795
590+000	185.672	185.743
590+010	185.834	185.705
590+020	185.890	185.683
590+030	185.827	185.675
590+040	179.717	185.675
590+050	180.099	185.675
590+060	184.702	185.675
590+070	186.046	185.699
590+080	186.406	185.819
590+090	186.773	186.038
590+100	187.237	186.357

HORIZONTAL ALIGNMENT (RIGHT / LEFT): IP-2 R=1500.00; IP-3 R=1500.00; IP-4 R=200.00

SUPER ELEVATION: NC, T, -2.55, T, 2, T, NC, T

589+800, 589+804.042, 589+836.842, 589+887.053, 589+936.182, 589+995.459, 590+011.659, 590+041.76, 590+100

Government of Nepal Ministry of Physical Infrastructure and Transport **Department of Roads** **Project Directorate Office (ADB)** **SASEC Highway Improvement Project-** **Project Preparatory Consultant (SHIP-PPC)** **ADB Loan No: 3722-NEP**	**CONSULTANT:** Soosung Engineering Co. Ltd, Korea in association with ERMC P (Ltd), Nepal and TSE-Tech Studio of Engineeering	**ROAD NAME:** **DOR, DCID** **ROAD NAME:** **East West Highway (H01)** Butwal - Gorusinghe Section	**SHEET TITLE:** Plan & Profile OF Jitgadi Bridge CH:589+800 - CH:590+100	**SCALE:** 0 2 4 6m Vertical Scale 0 10 20 30m Horizontal Scale

	NAME	SIGNATURE	REV NO.	DESCRIPTION
DESIGNED BY:	S.B. Shrestha			
CHECKED BY:	P. Upadhyaya			
APPROVED BY:	Dr. T.H.Choi			

DATE: November , 2022

DWG.NO.: 46_Jitgadi

SHEET NO.: 17/19

Ch:590+000
GL:185.672
DL:185.743

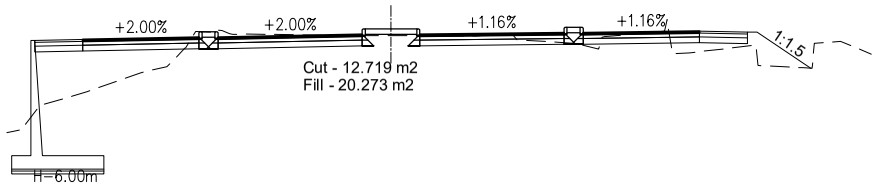

Ch:590+010
GL:185.834
DL:185.705

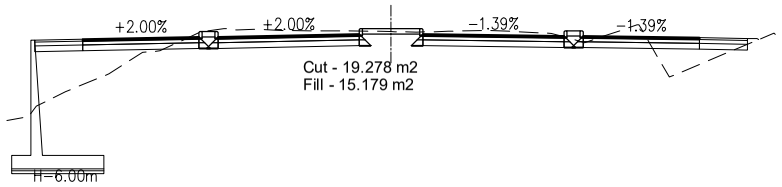

Ch:590+020
GL:185.890
DL:185.683

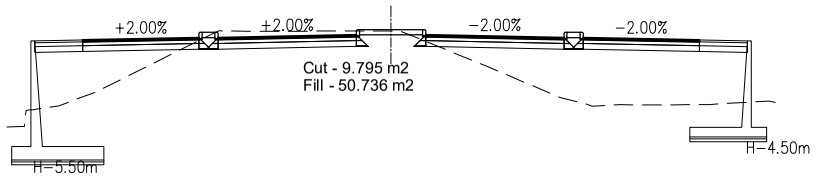

Ch:590+030
GL:185.827
DL:185.675

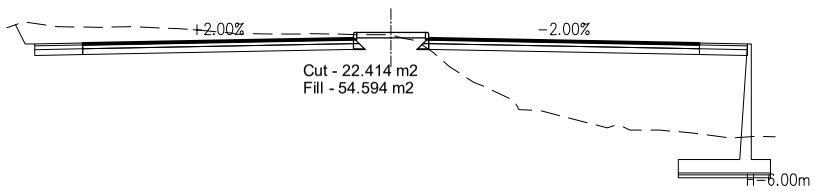

Ch:590+040
GL:179.717
DL:185.675

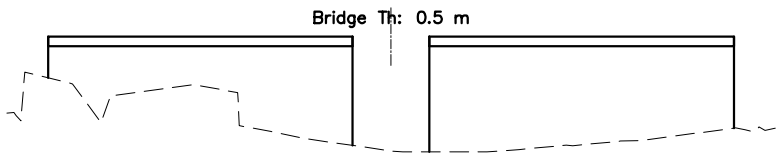

Ch:590+050
GL:180.099
DL:185.675

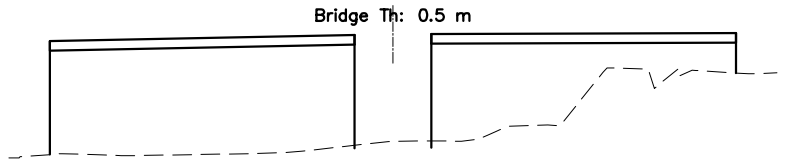

Ch:590+060
GL:184.702
DL:185.675

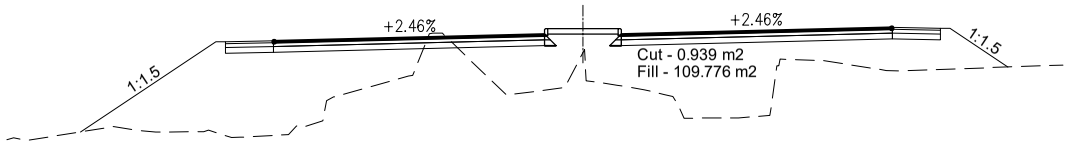

Ch:590+070
GL:186.046
DL:185.699

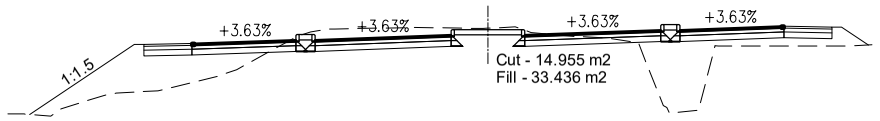

Ch:590+080
GL:186.406
DL:185.819

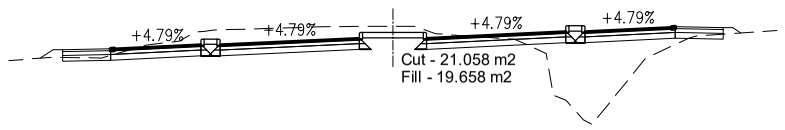

Ch:590+090
GL:186.773
DL:186.038

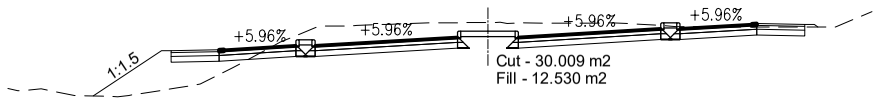

Ch:590+100
GL:187.237
DL:186.357

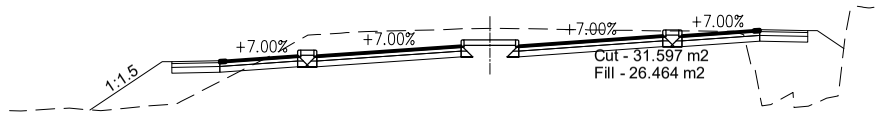

Ch:590+110
GL:187.676
DL:186.751

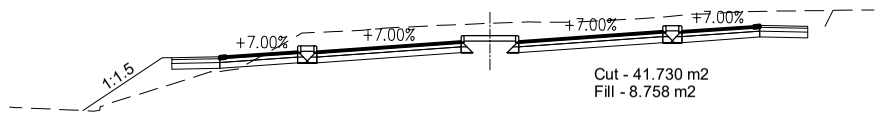

Ch:590+120
GL:188.053
DL:187.146

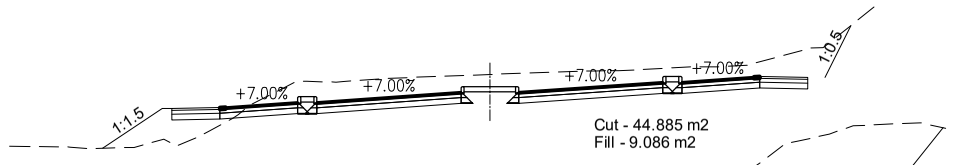

Ch:590+130
GL:188.423
DL:187.492

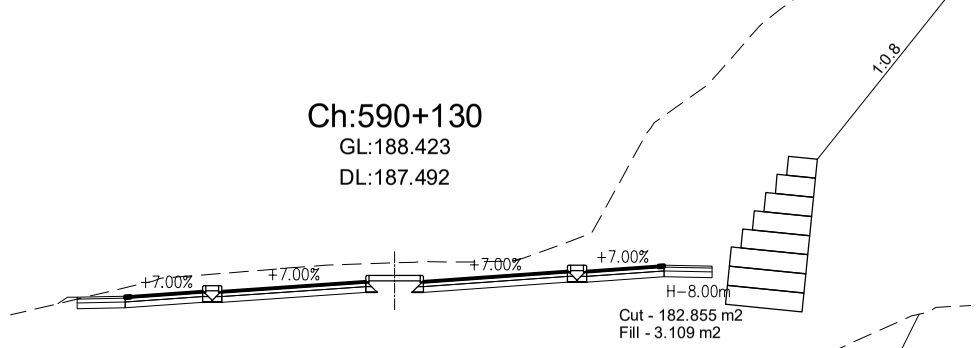

Ch:590+140
GL:188.618
DL:187.770

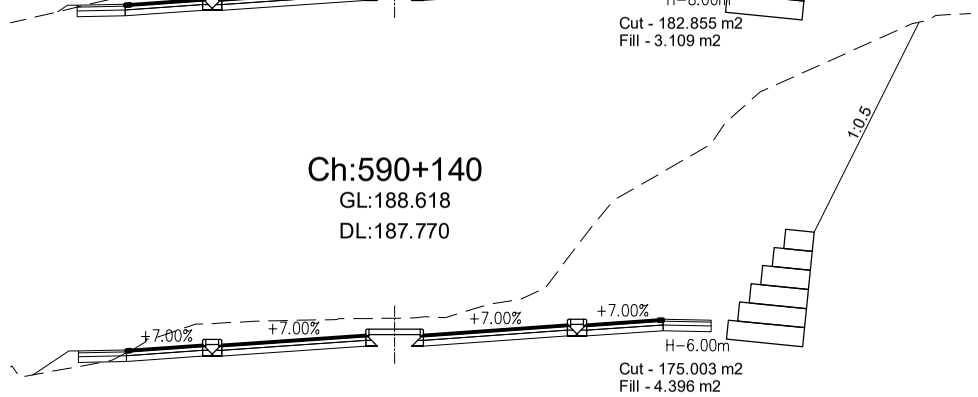

Government of Nepal Ministry of Physical Infrastructure and Transport **Department of Roads** **Project Directorate Office (ADB)** **SASEC Highway Improvement Project-** **Project Preparatory Consultant (SHIP-PPC)** **ADB Loan No: 3722-NEP**	**CONSULTANT:** Soosung Engineering Co. Ltd, Korea in association with ERMC P (Ltd), Nepal and TSE-Tech Studio of Engineeering	**ROAD NAME:** **DOR, DCID** **ROAD NAME:** **East West Highway (H01)**	**SHEET TITLE:** Cross Section of Ch:590+000 - 590+140	**SCALE:** 0 2 4 6m Vertical Scale 0 10 20 30m Horizontal Scale		**NAME**	**SIGNATURE**	**REV NO.**	**DESCRIPTION**	**DATE:** November , 2022
					DESIGNED BY:	S.B. Shrestha				**DWG.NO.:** 46_Jitgadi
					CHECKED BY:	P. Upadhyaya				
					APPROVED BY:	Dr. T.H.Choi				**SHEET NO.:** 17a/19

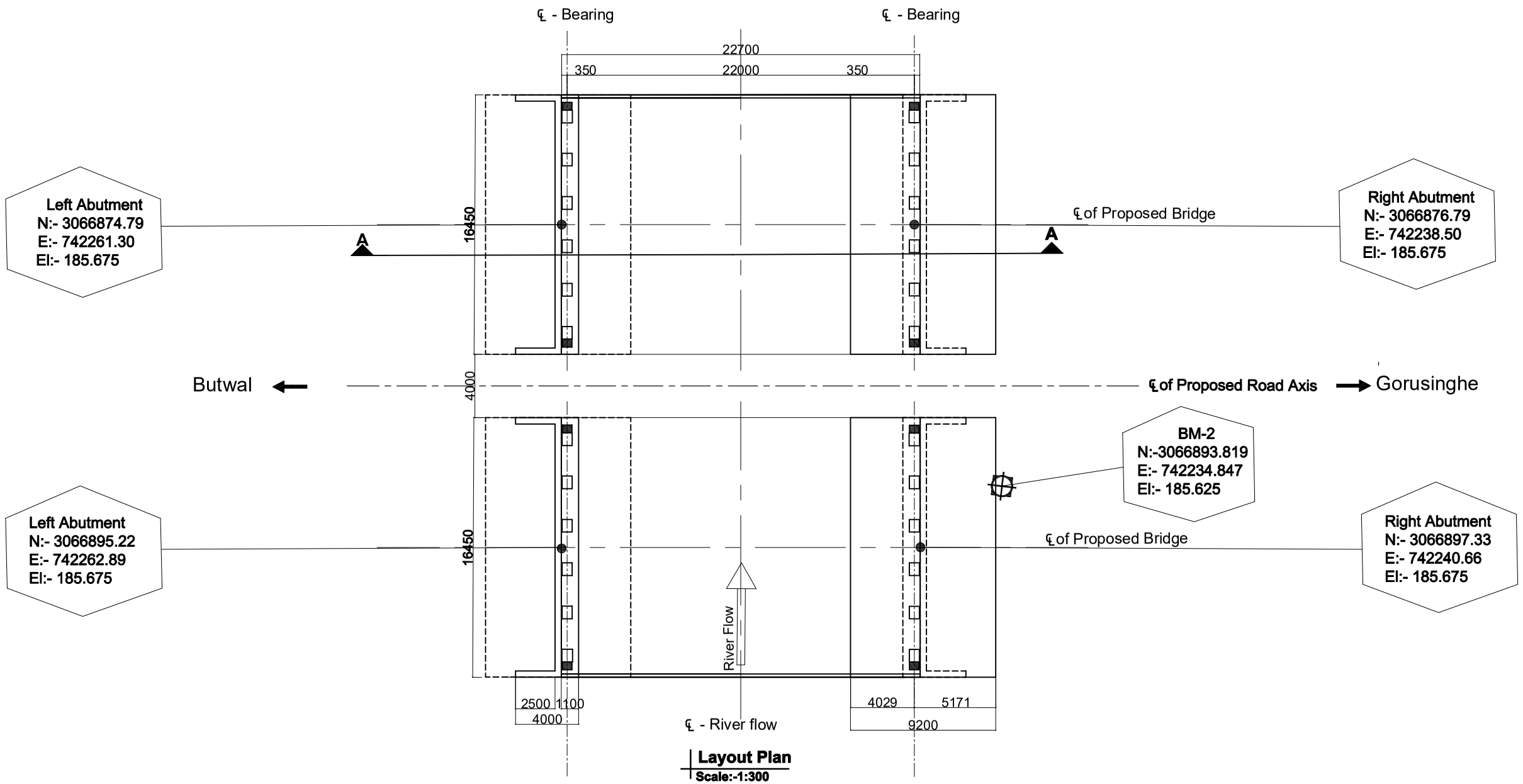

Layout Plan
Scale:-1:300

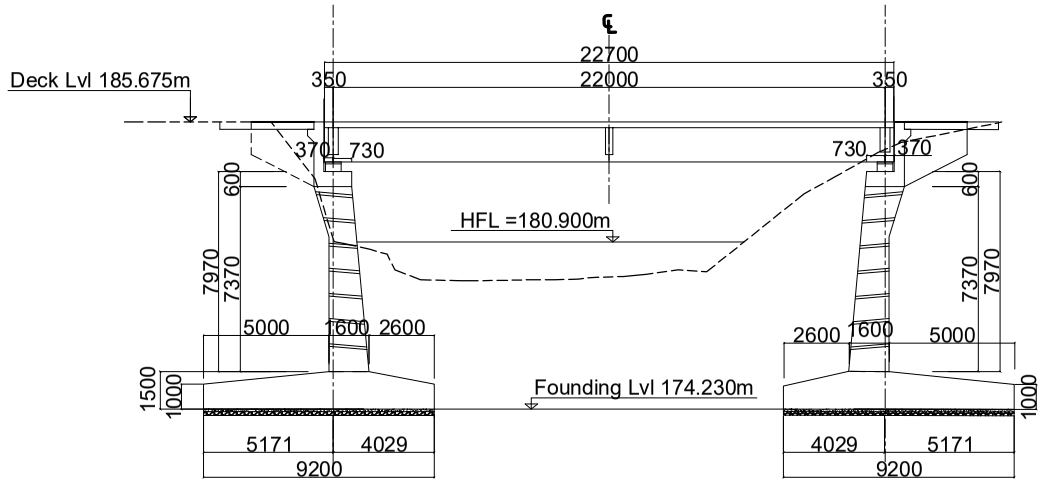

Section at A-A
Scale:-1:300

Government of Nepal Ministry of Physical Infrastructure and Transport **Department of Roads** **Project Directorate Office (ADB)** **SASEC Highway Improvement Project-** **Project Preparatory Consultant (SHIP-PPC)** **ADB Loan No: 3722-NEP**	**CONSULTANT:** Soosung Engineering Co. Ltd, Korea in association with ERMC P (Ltd) and TK-Tech Studio of Engineeering Nepal	**IMPLEMENTING AGENCY:** **DOR, DCID** **ROAD NAME:** **East West Highway (H01)** **Butwal - Gorusinghe Section**	**SHEET TITLE:** Layout Plan of **Jitgadi Bridge** (46/H001/287_A,B)	**SCALE:** As Shown		**NAME**	**SIGNATURE**	**REV NO.**	**DESCRIPTION**	**DATE:** November , 2022 **DWG.NO.:** 46_Jitgadi **SHEET NO.:** 18/19
					Designed by:	Saroj Bhattarai				
					Checked by:	P. Upadhyaya				
					Approved by:	Dr. T.H.Choi				

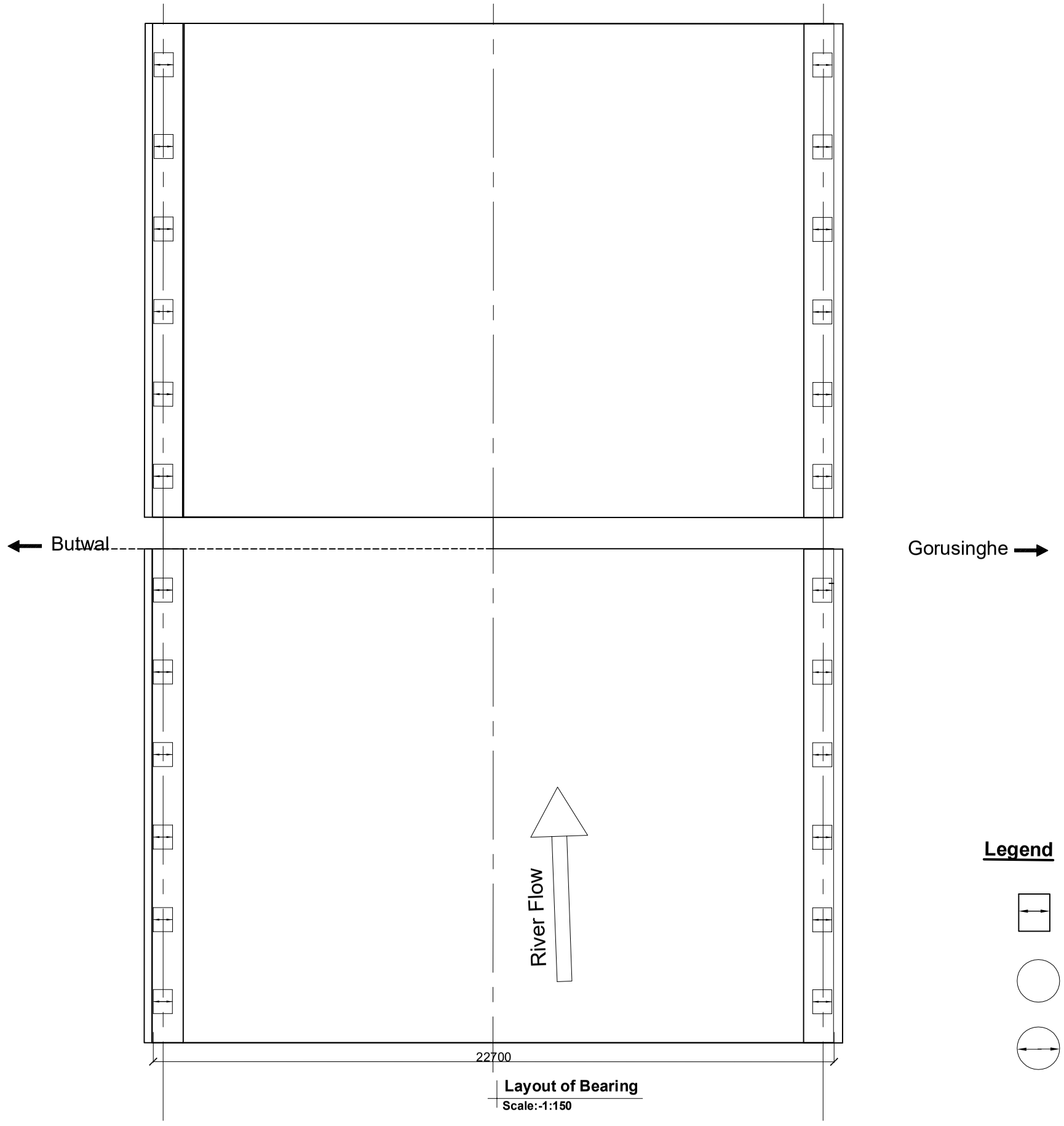

Layout of Bearing
Scale:-1:150

Legend

Elastomeric bearing.
Partial movement allowed in longitudinal direction.
Restrained to transverse movement.Free to rotate in any direction.

Fixed Pot-bearing.
Restrainde to lateral movement,Free to rotate in aney direction.

Free Pot-bearing.
Partial movement allowed in longitudinal direction.
Restrained to transverse movement.Free to rotate in any direction.

Government of Nepal Ministry of Physical Infrastructure and Transport **Department of Roads** **Project Directorate Office (ADB)** **SASEC Highway Improvement Project-** **Project Preparatory Consultant (SHIP-PPC)** **ADB Loan No: 3722-NEP**	**CONSULTANT:** Soosung Engineering Co. Ltd, Korea in association with ERMC P (Ltd) and TTE-Tech Studio of Engineeering Nepal	**IMPLEMENTING AGENCY:** **DOR, DCID** **ROAD NAME:** **East West Highway (H01)** **Butwal - Gorusinghe Section**	**SHEET TITLE:** Layout Plan of **Jitgadi Bridge** (46/H001/287_A,B)	**SCALE:** As Shown		**NAME**	**SIGNATURE**	**REV NO.**	**DESCRIPTION**	**DATE:** November , 2022 **DWG.NO.:** 46_Jitgadi **SHEET NO.:** 19/19
					Designed by:	Saroj Bhattarai				
					Checked by:	P. Upadhyaya				
					Approved by:	Dr. T.H.Choi				

Government of Nepal

Ministry of Physical Infrastructure and Transport

Department of Roads

Project Directorate (ADB)

Implementing Agency : DOR, DCID

Project Preparatory Consultants

Under

SASEC Highway Improvement Project (SHIP-PPC)

(ADB Loan No: 3722 Nep)

Contract No. SHIP/PPC/2020/02

Narsinga Dry Nala Bridge
(46-H001-288_AB)

St. Ch : 590+178.15 ~ End Ch : 590+195.85

Detailed Drawing

Butwal - Gorusinghe Sector

November,2022

CONTENTS

S.No.	DESCRIPTION	DWG. NO	NO. OF SHEETS
1.	General Notes.	1 - 2	2
2.	Topographic Map.	2.1	1
3.	General Arrangement.	3-4	2
4.	Bore Logs.	5	1
5.	Detail of Superstructure.	6	1
6.	Reinforcement Details of Slab.	7	1
7.	Reinforcement Details of Main Girder .	8	1
8.	Reinforcement details of Cross Girder.	9	1
9.	Bar Bending Schedule of Slab & Main Girder.	10	1
10.	Abutment Details.	11	1
11.	Reinforcement Details of Abutment.	12	1
12.	Bar Bending Schedule Abutment.	13	1
13.	Reinforcement Details of Approach Slab.	14	1
14.	Miscellaneous Detail.	15-16	2
15.	River Training Work.	16.1	1
16.	Plan & Profile.	17	1
17.	Cross Section.	17.1-17.2	2
18.	Layout Plan.	18-19	2

GENERAL NOTES

General

- Metric system of measurement is used in all drawings. Elevation and Stations are shown in Meter and all other dimensions are in Millimeters, except indicated otherwise.
- In case of contradictions, specific notes on respective sheet shall supersede the General Notes
- No dimensions shall be scaled from the drawings. Only written dimensions shall be followed. Any doubtful matter in the drawings shall be brought to the attention of the engineer-in-charge for any corrections before the execution of the works.

Design Notes

The design codes followed:
For RCC and PSC concrete - IRC:112-2020
For loads and stresses - IRC:6-2017
For substructure and foundations - IRC:78-2014
For seismic design - IRC:SP:114-2018. Seismic zone V. Importance factor 1.2

Design live loads:

For urban area bridges
Case 1 - 3 lanes of class A + pedestrians; 1 lane of class A + 1 lane of class 70R + pedestrians
Case 2 - 4 lanes or class A; 2 lanes of class A + 1 lane of class 70R. No pedestrians
For non-urban area bridges
Case 1 - 2 lanes of class A + pedestrians; 1 lane of class 70R + pedestrians
Case 2 - 3 lanes of class A; 1 lane of class A + 1 lane of class 70R. No pedestrians.

Notes on Concrete

In General the grade of concrete to be used shall be as follows:
(**unless otherwise specified in the respective drawing sheets**)

For superstructure deck slab, wearing course, crash barriers:	M30
For raised footpaths:	M25
For main girders and cross girders of superstructure with PSC girders:	M45
For main girders and cross girders of superstructure with RCC girders:	M30
For substructure: Abutment stem, ballast wall, stoppers, bearing pedestals, pier cap, pier stem and pile caps:	M30
For bored and cast in situ piles:	M35
For leveling course:	M15

The maximum size of aggregate shall be as per IRC:112-2020, clause 18.4.4.2

Admixture to the concrete

To improve workability and/or increase initial setting time of concrete and cement grout, admixture conforming to IS:9103 and ASTM C-494, (Type F - High Range Water Reducing admixture) can be added in appropriate dosage, subject to their satisfactory proven use.

Clear Cover to reinforcement (unless otherwise specified in the respective drawing sheets)

Reinforcement bars of all components of the superstructure:	40mm
Prestressing ducts or strands in superstructure:	75mm
All components of abutment, pier, pile caps and piles (except stoppers and bearing pedestals):	75mm
Bearing pedestals and Stoppers:	50mm

Cover shall be ensured with the use of properly sized cement concrete blocks which can be secured to the re-bars or other devices approved by the engineer-in-charge. Use of loose stones or wooden pieces is not permitted.

Notes on Reinforcement

- All reinforcing steel bars shall be High Strength Deformed bars with grade Fe500 conforming to IS:1786
- Laps and Splices shall conform to IRC:112-2020, Clause 15.2.5. Use of mechanical coupler is permitted upon approval by the engineer.

Notes on Prestressing

- Prestressing strands shall be Class-2, uncoated 7 ply, low relaxation type with ultimate tensile stress 1862 N/mm², conforming to IS:14268.
- The diameter of strands, their number in a tendon and the total jacking force to be applied is specified in the respective drawing sheet. All the initial and long term losses are already incorporated in design.
- Corrugated HDPE Sheathing ducts shall be used with the minimum internal diameter not less than three times the cross sectional area of the tendon. The wall thickness and other properties of the sheathing shall be as per IRC:112-2020, clause 13.4.3
- The specified profile and the alignment of the ducts shall be strictly maintained by properly securing the ducts to the re-bars. If required, pieces of re-bars can be added or the re-bars slightly repositioned or bent to maintain the profile and alignment, with approval of the engineer-in-charge.
- The jacking equipment shall be fitted with appropriate force measuring device and shall be regularly checked and calibrated as prescribed by the manufacturer.
- Jacking shall be done from both ends simultaneously and gradually, recording the elongation both sides. The expected final elongation mentioned in the respective drawings sheet is based on modulus of elasticity of the strands (Es) equal to 1.95x10^5 MPa. If the Es of supplied strands is different then the elongation values shall be recalculated by multiplying the Design values of elongation by the ratio of Design Es / Actual Es.
- In case the total elongation is not achieved at the prescribed jacking force, the jacking operation can be continued until the force reaches the maximum allowable value. If the required elongation is achieved at jacking force lower than the prescribed value, the jacking operation shall continue until the prescribed force is reached, provided the Sum of the additional elongations thus achieved is not more than 5% of the sum of the prescribed elongations.
- In adverse condition to any of the cases above, the jacking operation shall be stopped, the tendons removed and this matter reported to the engineer-in-charge for further instruction. The jacking force should NEVER exceed the Maximum allowable value.

Grouting

- The tendons which satisfy the above conditions shall be grouted properly, ensuring the duct is free of any foreign material and there is no leak or damage around the joints between the anchors and the ducts. Grouting can be normally done immediately after successful completion of tensioning operations and shall not be delayed by more than 5 days of tensioning of the cables.
- The grout shall be prepared with Ordinary Portland cement with suitable expansive admixture approved by the engineer. Admixture containing chloride and nitrate are not permitted. The water/cement ratio shall not be more than 0.48. Retempering of the grout shall not be permitted. The grout shall be mixed with mechanical mixers and shall be continuously kept agitated until pumped in.

Stages and sequence of Prestressing

- The Precast composite girders shall be prestressed in two stages. The specified number of the tendons shall be tensioned in the prescribed sequence shown in the respective drawing sheet.
- The remaining tendons shall be tensioned after specified days after casting of the deck slab, in the sequence shown in the respective drawing sheet.
- The prestressing of the precast girder shall be started only after confirming that the cube specimen has achieved 100% of the prescribed compressive strength. No early prestressing allowed.

Construction methodology and sequence for Precast Prestressed Composite superstructure

- The main girders are be precast near the bridge site at suitable location (approach road or dry river bed, if available) on well prepared casting yard. The choice of location also depends upon the equipment available for lifting or launching the girders. After completion of the prestressing works the girders are either lifted by suitable cranes or pushed/launched with the help of rails and jacks or launching girders and placed carefully over the already completed substructure. Care shall be taken that all the preparatory works for the bearings are done properly before the launching/placing of the girders.
- Lifting shall be done only by the hooks provided at both ends. In case of jacking the jacking points shall be only just under the location of the hooks. No support, lifting or jacking is allowed at any other section of the girder
- After placing all the main girders and finishing the works on the bearings, the formwork for deck slab and cross girders are prepared. All the formwork for deck slab and cross girders shall be supported by the main girders. The main girders shall remain un-propped during casting of the deck slab. Similarly there shall be no false-work or props from the ground or part of substructure during casting of the deck slab.
- The Contractor shall ensure stability of the girders during all stages of construction.
- Dimensional tolerances for the precast girders shall be as per IRC:SP:71-2018, Clause 4.10. If not prescribed otherwise, transportation and handling operation shall follow the guidelines in Clause 4.9 of the same documents.
- The prescribed time-line for construction of the superstructure is as follows

Prestressing of Precast Girder only (Stage 1)	After 28 days of casting or confirming 100% compressive strength of concrete
Lifting/Launching of the Girder	Within 14 days of first stage prestressing
Casting of the Deck Slab	Within 14 days of placing of girder over substructure
Prestressing of Girder (Stage 2)	After 14 days of casting of deck slab
Casting of Footpath, Crash Barrier, Wearing Course etc	Preferably within 7 days but not later than 14 days of Second stage prestressing

Deviation from the above time-line is subject to approval by the engineer. No other vehicle except the concreting apparatus are allowed on the deck until the deck slab has attained its full specified strength.

Construction methodology for Cast-in-situ RCC superstructure

- Construction of Monolithic cast in situ RCC superstructure shall follow the standard practices. The falsework for the girders and deck slab are supported on the ground and removed after specified time period.

Notes on Bearings

- The contractor shall supply, provide and install the bearings designed according to the loadings and other relevant information provided in the drawings or BOQ.
- The dimension and number of layers of the Elastomeric bearings shown in the drawings are tentative. The bearings shall be designed, fabricated, tested and installed as per IRC:83 - 2018, Part-2 for elastomeric bearing and Part-3 for Pot-PTFE bearings, as the case applies.

Notes on Foundation and Substructure

- Standard Specifications and Special provisions to the Standard Specifications (if any) and specific notes on the drawings shall be followed for the construction of the abutments, piers and foundations.
- Backfill behind the abutment shall be places only after the concrete has achieved full 28 days strength. Heavy compaction equipment weighing more than 10 Ton shall not be used within 2.0 meters from the back of the abutment until all the works on superstructure is completed.
- The graded backfill behind the abutment shall be at a slope not steeper than 62 degrees, starting from the back of the footing. The back fill material dry density shall be within 1900 to 2200 kN/m³ and moisture content between 9 to 15%
- In case of new bridge adjacent to the existing bridge, care shall be taken not to render any damage to the elements of the existing bridge. Particular attention shall be paid to the foundation of the existing bridge. The contractor shall ensure that excavation for the foundation of the new bridge does not cause instability or settlement of the foundation of the existing bridge.
- If the existing bridge has a shallow foundation, the contractor shall protect the existing foundation by sheet piling or any other suitable means to the satisfaction of the engineer, before excavating for the foundation of the new bridge.

General Note: (For all Pile Foundation)

- Drilling/Boring works for pile is allowed only with rotary or oscillator type drilling equipment.No percussion method is allowed .Stability of borehole shall be ensured by the use of temporary casing.Use of other methods of borehole stability is subject to approval by the engineer, but in such case use of water/air/chemical jetting for boring process shall not be allowed.
- In case of drilling/boring without temporary casing,the contractor should ensure the stability and uniformity of the borehole before lowering the reinforcement cage and during concreting.
- Boring/Drilling of the piles is preferred in a staggered pattern.Boring/Drilling for any pile shall not commence before 24 hours of completion of concreting of any pile within a radius of 6 meters from its center.
- In case of drilling/boring without temporary casing , the pile shall be lined with 6mm thick permanent casing from the bottom of the pile cap down to 0.5 m below the maximum scour depth or 1.5 m whichever is larger.

Government of Nepal Ministry of Physical Infrastructure and Transport **Department of Roads** **Project Directorate Office (ADB)** **SASEC Highway Improvement Project-** **Project Preparatory Consultant (SHIP-PPC)** **ADB Loan No: 3722-NEP**	**CONSULTANT:** Soosung Engineering Co. Ltd, Korea in association with ERMC P (Ltd) and TSE-Tech Studio of Engineeering Nepal	**IMPLEMENTING AGENCY:** **DOR, DCID** **ROAD NAME:** **East West Highway (H01)** **Butwal - Gorusinghe Section**	**SHEET TITLE:** Topographic Map of **Narsinga Dry Nala Bridge** (46/H001/288_A,B)	**SCALE:** 1;1		**NAME**	**SIGNATURE**	**REV NO.**	**DESCRIPTION**	**DATE:** November , 2022 **DWG.NO.:** 288_Narsinga **SHEET NO.:** 2.1/19
					Designed by:	Saroj Bhattarai				
					Checked by:	P. Upadhyaya				
					Approved by:	Dr. T.H.Choi				

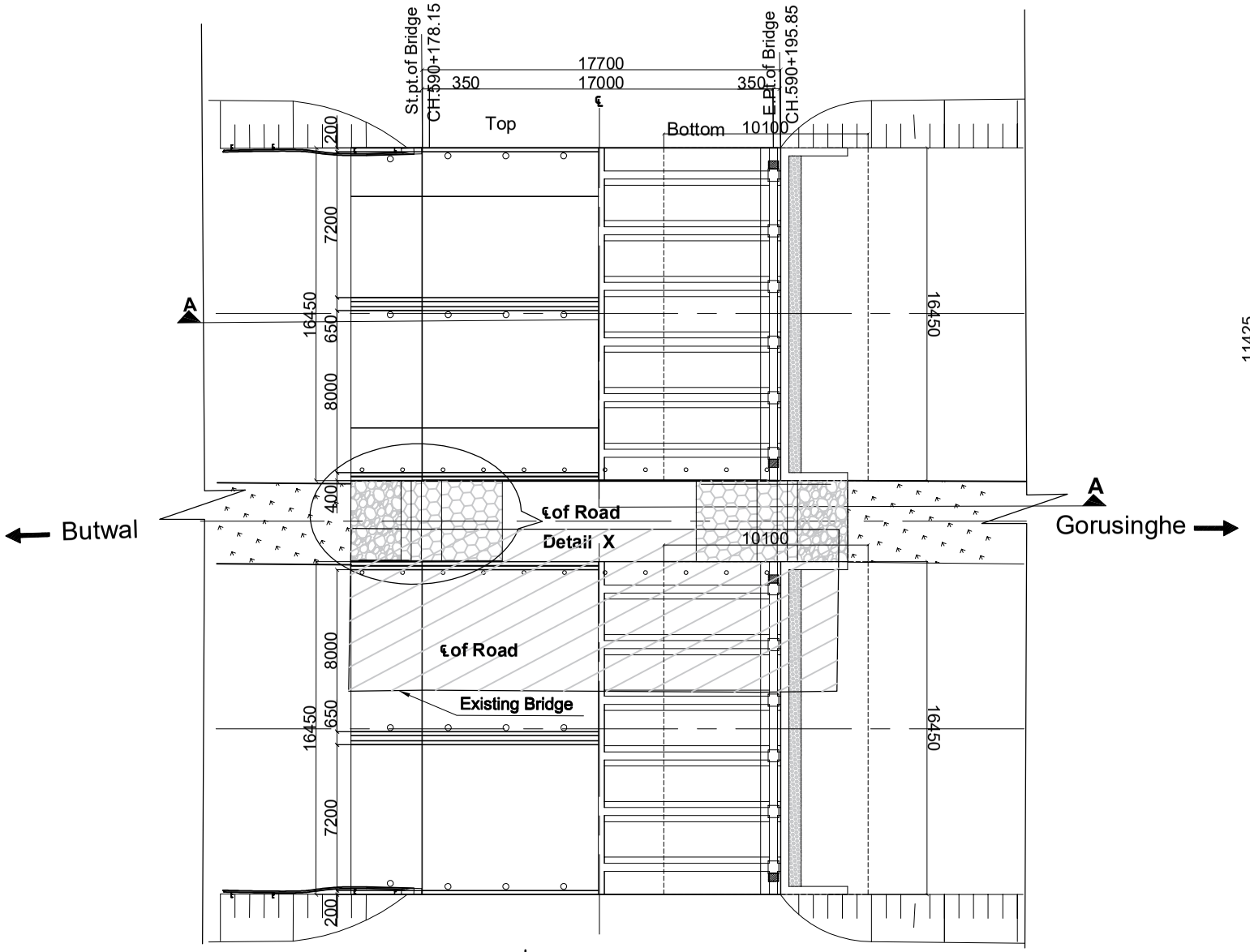

Half Sectional Plan
Scale:-1:300

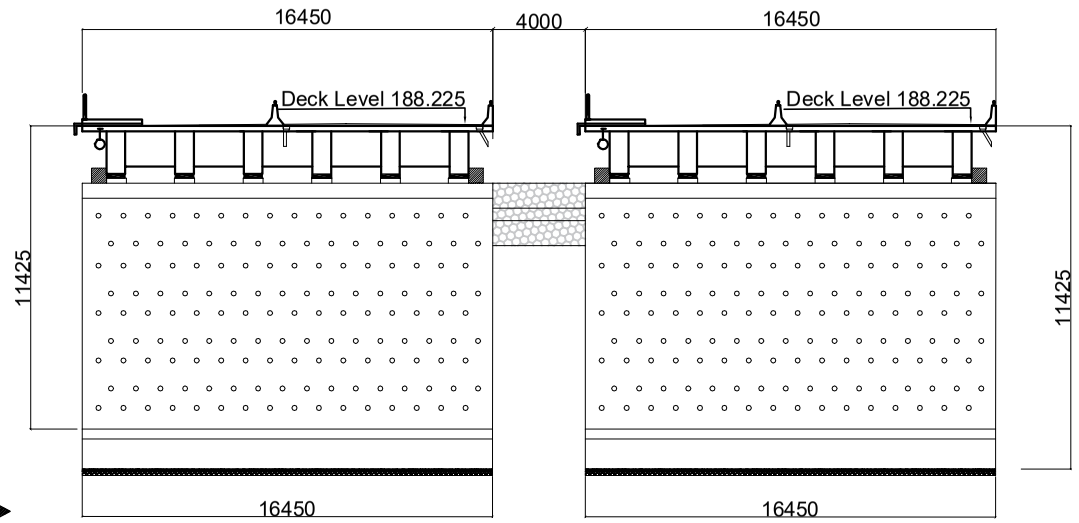

Elevation of Abutment
Scale:-1:300

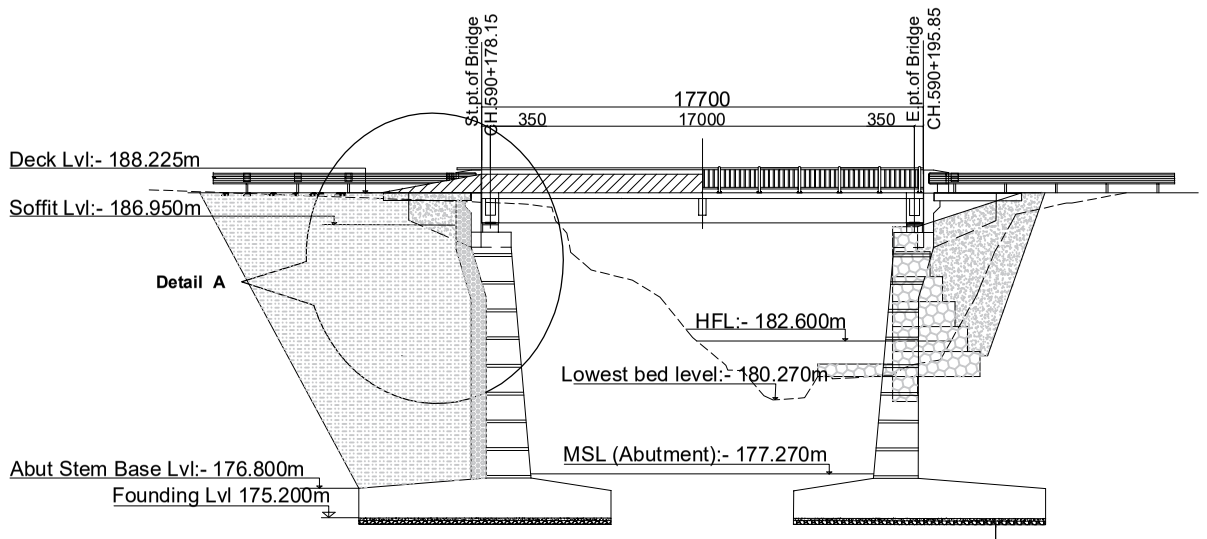

Half Sectional Elevation
Scale:-1:300

Note :-
MSL :- Maximum Scour Level
HFL :- High Flood Level
LBL :- Lowest Bed Level
RL :- Reduced Level

	Name(NEC Number)	Signature
P. Engineer	P. Upadhyaya (Civil A 675)	
Structure Engineer	K.P.Wagle(Civil A 127) / P.Shrestha(Civil A 676) / S.Bhattarai (Civil A 904)	
Hydrologist	Dr. P.C. Jha(Civil A 166) / S. Adhikari (Civil A 408)	
Geotechnical Engineer	A. Adhikari(ka 199) / Dr. V . R. S. Shahi	

Government of Nepal Ministry of Physical Infrastructure and Transport **Department of Roads** **Project Directorate Office (ADB)** **SASEC Highway Improvement Project-** **Project Preparatory Consultant (SHIP-PPC)** **ADB Loan No: 3722-NEP**	**CONSULTANT:** Soosung Engineering Co. Ltd, Korea in association with ERMC P (Ltd) and TSC-Tech Studio of Engineeering Nepal	**IMPLEMENTING AGENCY:** **DOR, DCID** **ROAD NAME:** **East West Highway (H01)** **Butwal - Gorusinghe Section**	**SHEET TITLE:** General Arrangement of **Narsinga Dry Nala Bridge** (46/H001/288_A,B)	**SCALE:** As Shown		**NAME**	**SIGNATURE**	**REV NO.**	**DESCRIPTION**	**DATE:** November , 2022 **DWG.NO.:** 388_Narsinga **SHEET NO.:** 03/19
					Designed by:	Saroj Bhattarai				
					Checked by:	P. Upadhyaya				
					Approved by:	Dr. T.H.Choi				

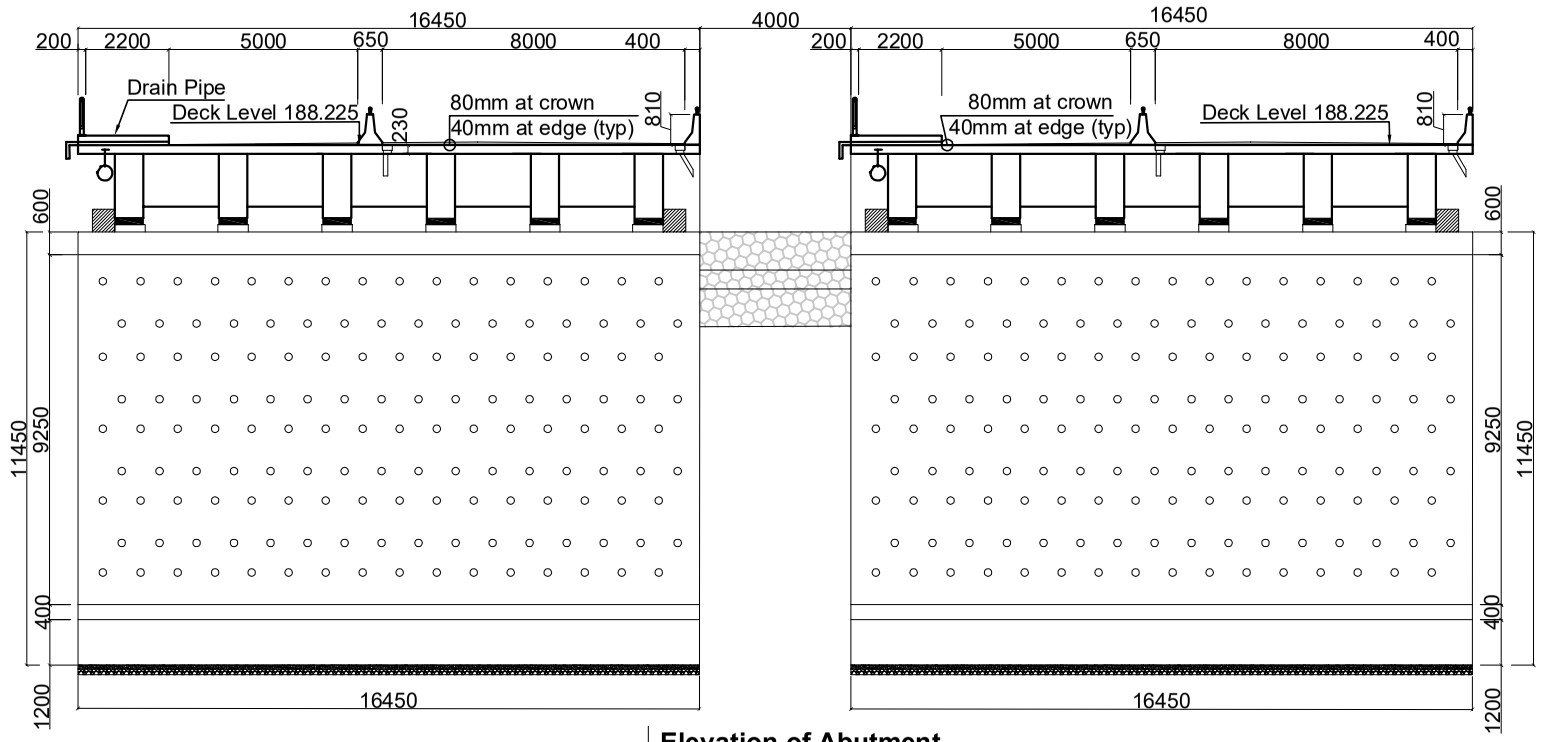

Elevation of Abutment
Scale:-1:200

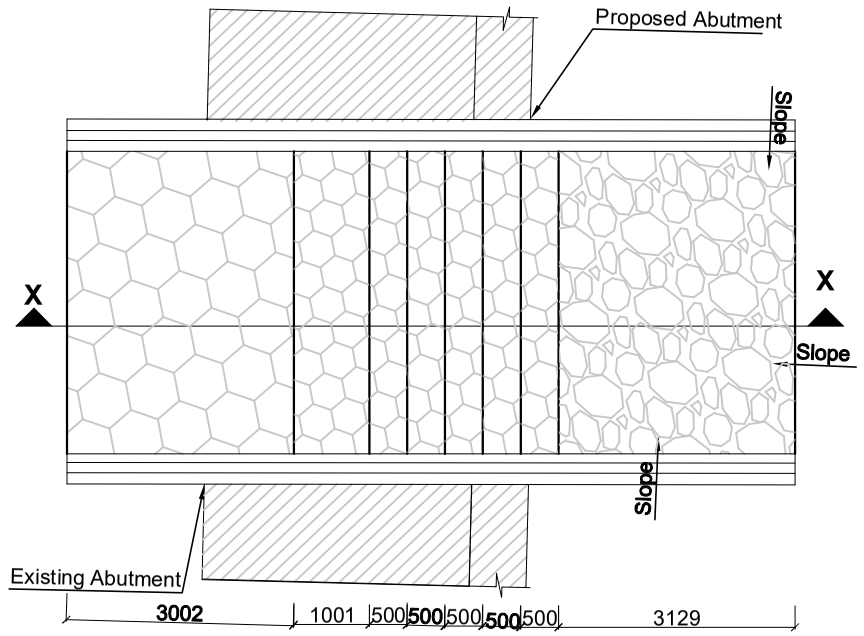

Detail Plan of X
(Transition Between Approch Embankmant)
Scale:-1:100

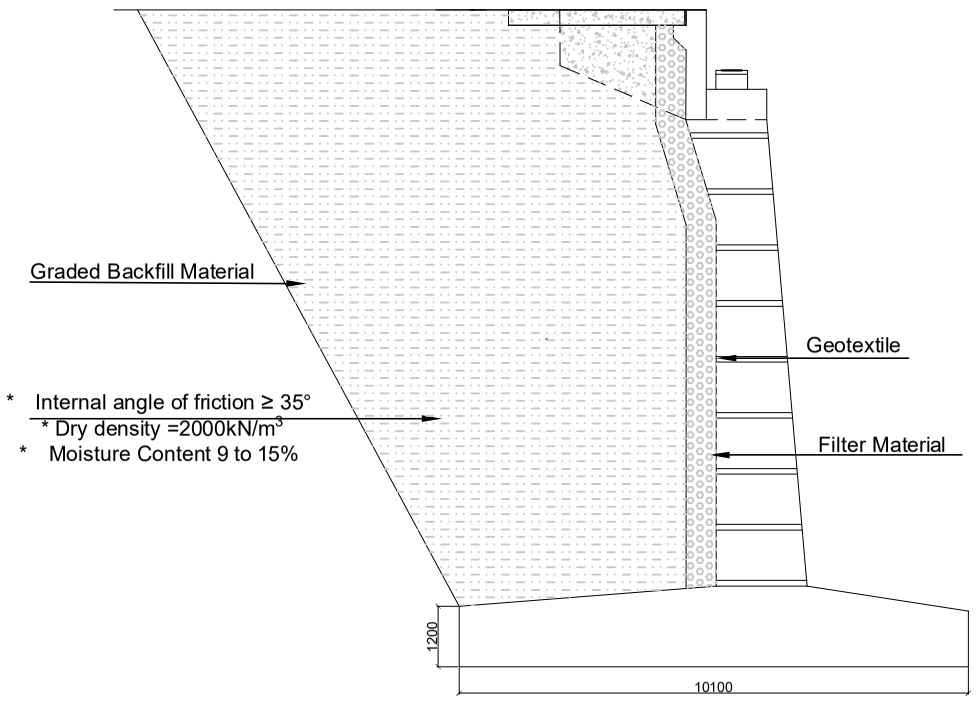

Detail of A
Scale:-1:150

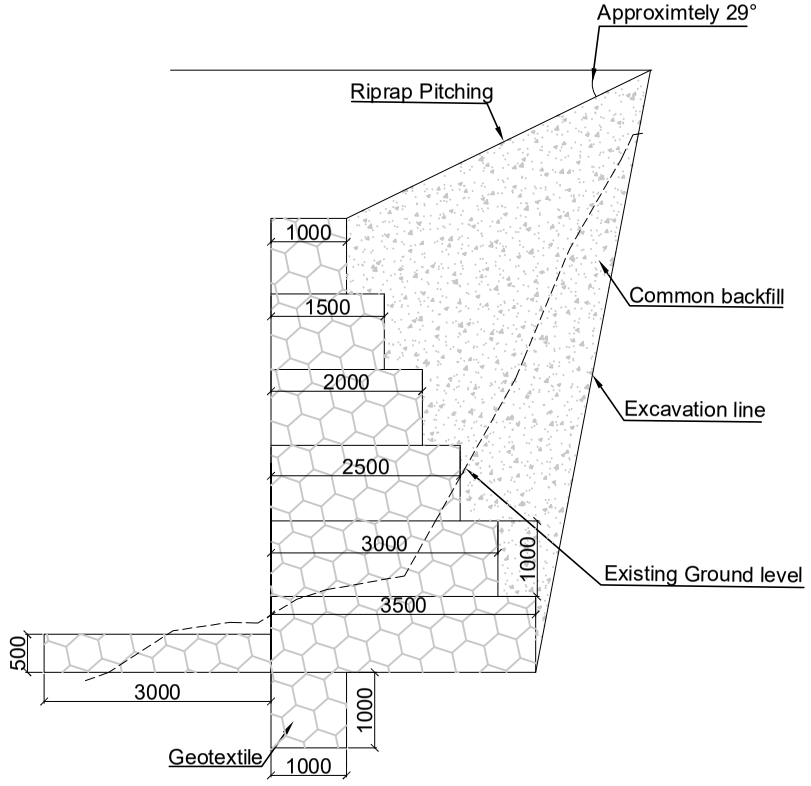

Section at X-X
Scale:-1:100

	Name(NEC Number)	Signature
P. Engineer	P. Upadhyaya (Civil A 675)	
Structure Engineer	K.P.Wagle(Civil A 127) / P.Shrestha(Civil A 676) / S.Bhattarai (Civil A 904)	
Hydrologist	Dr. P.C. Jha(Civil A 166) / S. Adhikari (Civil A 408)	
Geotechnical Engineer	A. Adhikari(ka 199) / Dr. V . R. S. Shahi	

Government of Nepal Ministry of Physical Infrastructure and Transport **Department of Roads** **Project Directorate Office (ADB)** **SASEC Highway Improvement Project-** **Project Preparatory Consultant (SHIP-PPC)** **ADB Loan No: 3722-NEP**	**CONSULTANT:** Soosung Engineering Co. Ltd, Korea in association with ERMC P (Ltd) and TTE-Tech Studio of Engineeering Nepal	**IMPLEMENTING AGENCY:** **DOR, DCID** **ROAD NAME:** **East West Highway (H01)** **Butwal - Gorusinghe Section**	**SHEET TITLE:** General Arrangement of **Narsinga Dry Nala Bridge** (46/H001/288_A,B)	**SCALE:** As Shown		**NAME**	**SIGNATURE**	**REV NO.**	**DESCRIPTION**	**DATE:** November , 2022 **DWG.NO.:** 388_Narsinga **SHEET NO.:** 04/19
					Designed by:	Saroj Bhattarai				
					Checked by:	P. Upadhyaya				
					Approved by:	Dr. T.H.Choi				

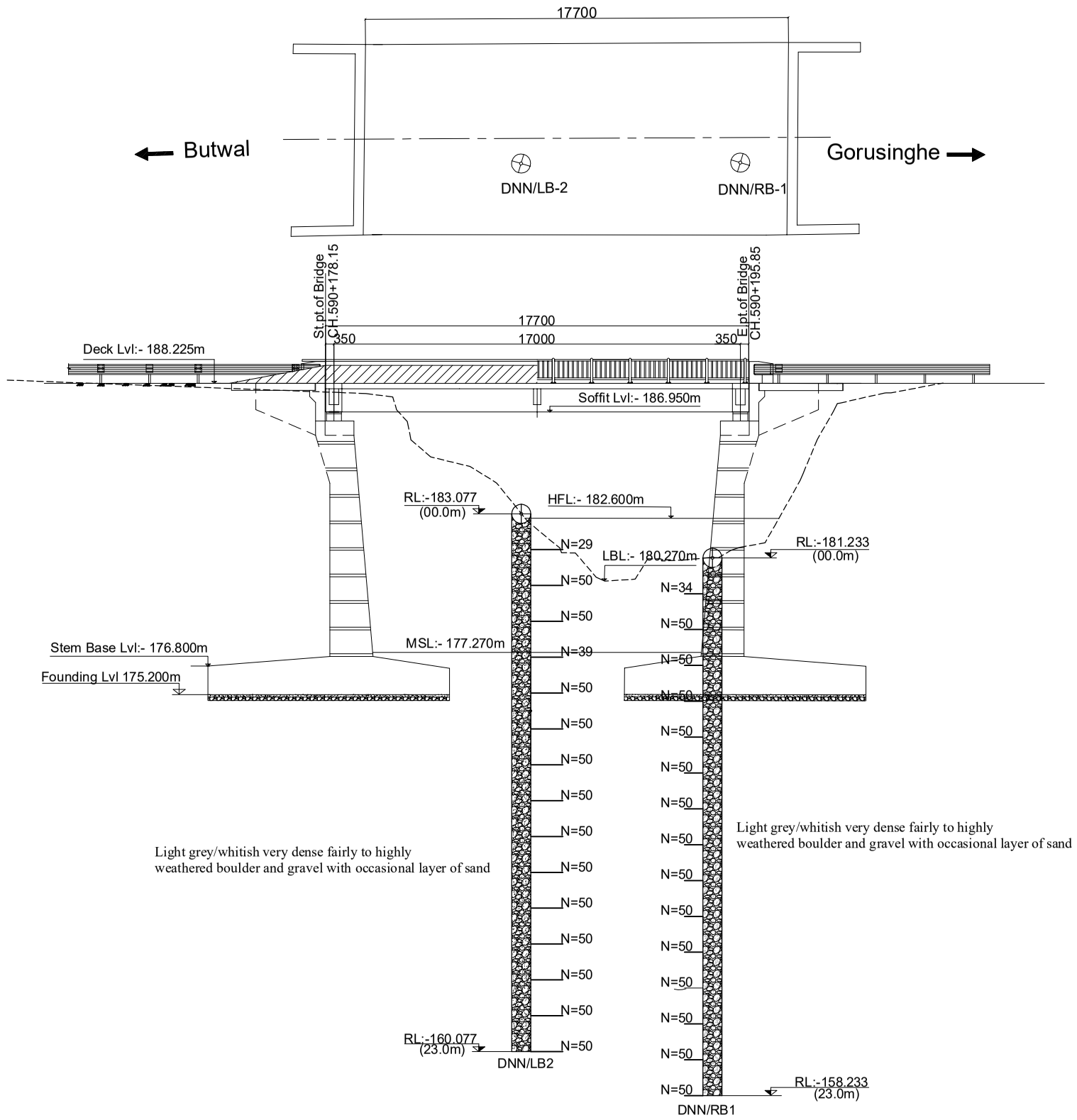

Bore Log Detail
Scale:-1:250

N

Borehole No : DNN/LB02
Easting : 83°27' 19.28 " Northing : 27° 42' 15.23" Elevation, m : 183.077
Borehole No : DNN/RB01
Easting : 83° 27' 19.23" Northing : 27° 42' 15.51" Elevation, m : 181.233

Note :-
MSL :- Maximum Scour Level
HFL :- High Flood Level
LBL :- Lowest Bed Level
RL :- Reduced Level

NOTE ON SUB-SOIL PROFILE
The sub-soil profile shown here is based on information obtained from the investigation bore-holes at the locations as shown.
The actual soil type away from the vicinity of the boreholes may differ .

	Name(NEC Number)	Signature
P. Engineer	P. Upadhyaya (Civil A 675)	
Structure Engineer	K.P.Wagle(Civil A 127) / P.Shrestha(Civil A 676) / S.Bhattarai (Civil A 904)	
Hydrologist	Dr. P.C. Jha(Civil A 166) / S. Adhikari (Civil A 408)	
Geotechnical Engineer	A. Adhikari(ka 199) / Dr. V . R. S. Shahi	

Government of Nepal Ministry of Physical Infrastructure and Transport **Department of Roads** **Project Directorate Office (ADB)** **SASEC Highway Improvement Project-** **Project Preparatory Consultant (SHIP-PPC)** **ADB Loan No: 3722-NEP**	**CONSULTANT:** Soosung Engineering Co. Ltd, Korea in association with ERMC P (Ltd) and TTE-Tech Studio of Engineeering Nepal	**IMPLEMENTING AGENCY:** **DOR, DCID** **ROAD NAME:** **East West Highway (H01)** **Butwal - Gorusinghe Section**	**SHEET TITLE:** Bore Log Details of **Narsinga Dry Nala Bridge** (46/H001/288_A,B)	**SCALE:** 1:500		**NAME**	**SIGNATURE**	**REV NO.**	**DESCRIPTION**	**DATE:** November , 2022 **DWG.NO.:** 388_Narsinga **SHEET NO.:** 05/19
					Designed by:	Saroj Bhattarai				
					Checked by:	P. Upadhyaya				
					Approved by:	Dr. T.H.Choi				

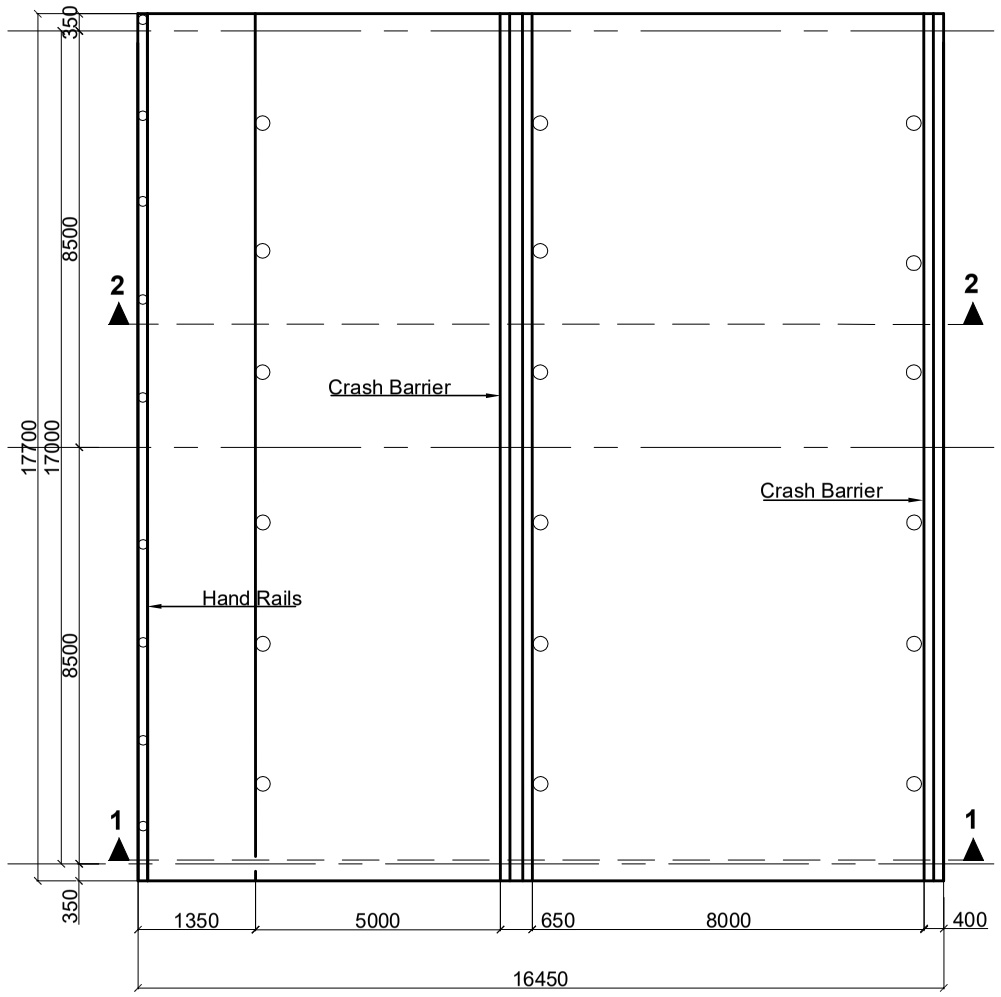

Plan Of Deck
Scale:-1:150

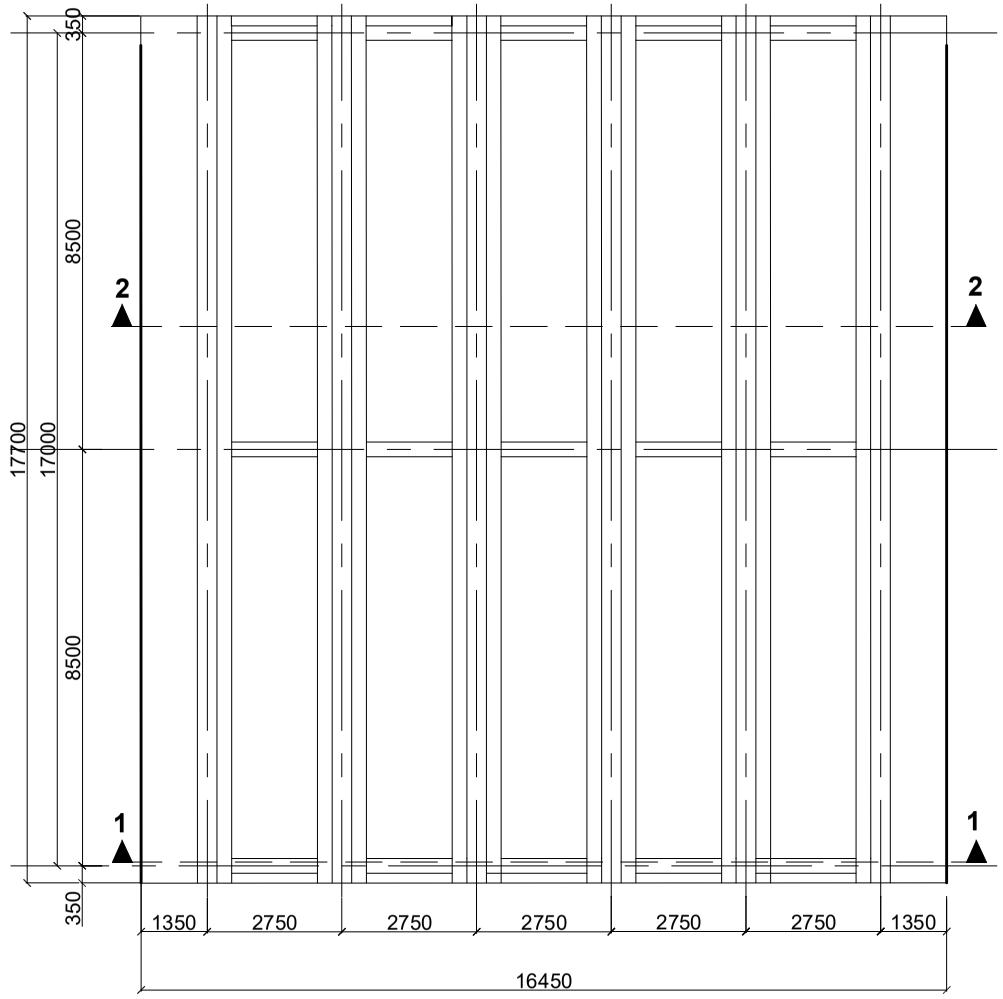

Plan Of Girder
Scale:-1:150

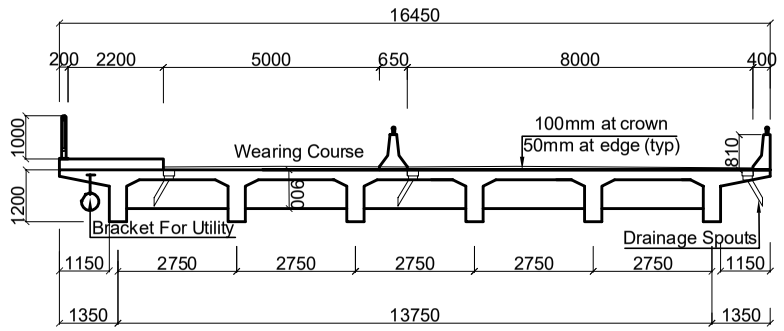

Section At 1-1
Scale:-1:150

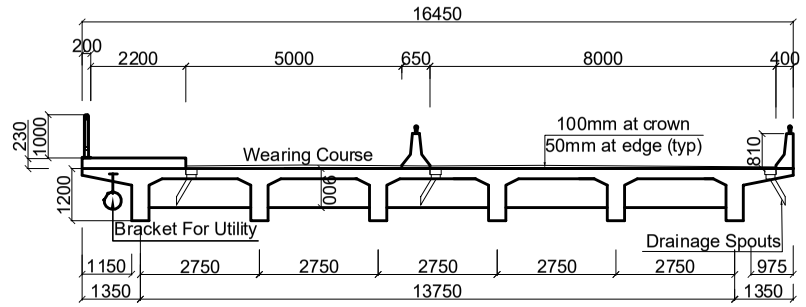

Section At 2-2
Scale:-1:150

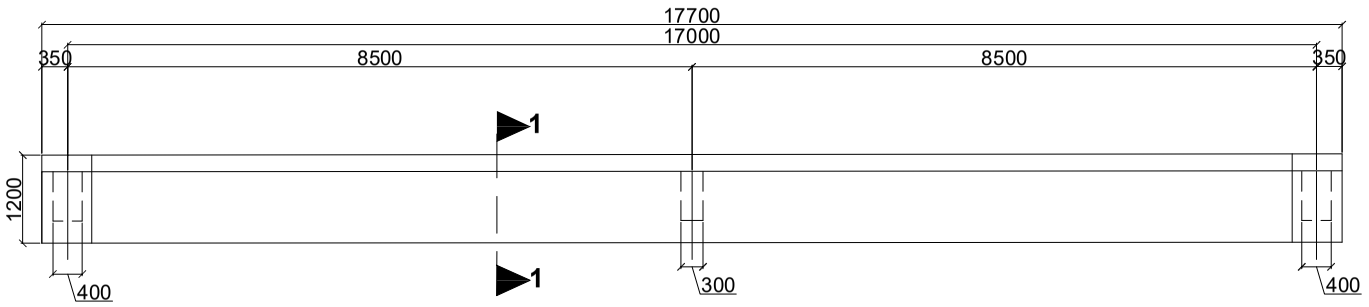

Longitudinal Sectional Elevation
Scale:-1:100

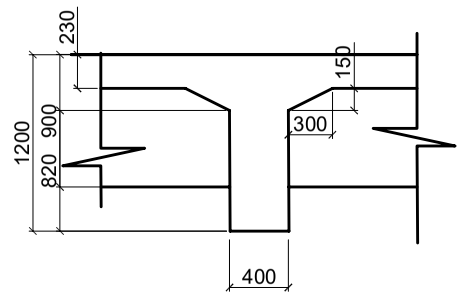

Section 1-1 Main Girder
Scale:-1:50

NOTES:
Dowel bars similar to the longitudional bars of the cross section girders shall be placed in the precast main girder before casting. The longitudional bars of the cross girder shall be lapped to the dowel bers, which shall have a lap length of 60 dia. of the corresponding bars.

NOTES:
To lift the deck for maintenance, the jacks shall be placed under the positions marked "J".

Government of Nepal Ministry of Physical Infrastructure and Transport **Department of Roads** **Project Directorate Office (ADB)** **SASEC Highway Improvement Project-** **Project Preparatory Consultant (SHIP-PPC)** **ADB Loan No: 3722-NEP**	**CONSULTANT:** Soosung Engineering Co. Ltd, Korea in association with ERMC P (Ltd) and TSC-Tech Studio of Engineeering Nepal	**IMPLEMENTING AGENCY:** **DOR, DCID** **ROAD NAME:** **East West Highway (H01)** **Butwal - Gorusinghe Section**	**SHEET TITLE:** Details of Superstructure of **Narsinga Dry Nala Bridge** (46/H001/288_A,B)	**SCALE:** As Shown		**NAME**	**SIGNATURE**	**REV NO.**	**DESCRIPTION**	**DATE:** November_2022 **DWG.NO.:** 288_Narsinga **SHEET NO.:** 06/19
					Designed by:	Saroj Bhattarai				
					Checked by:	P. Upadhyaya				
					Approved by:	Dr. T.H.Choi				

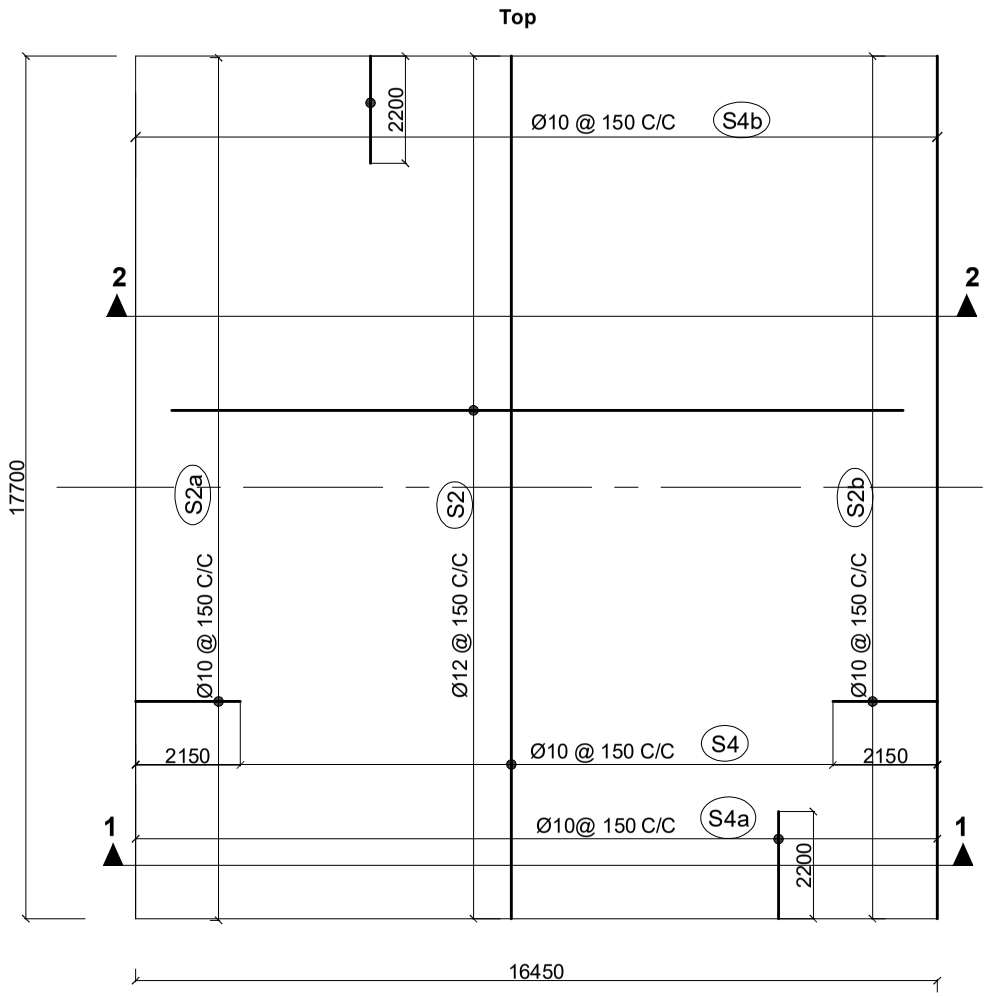

Reinforcement Details Of Deck Slab(Top Face)

Scale:-1:150

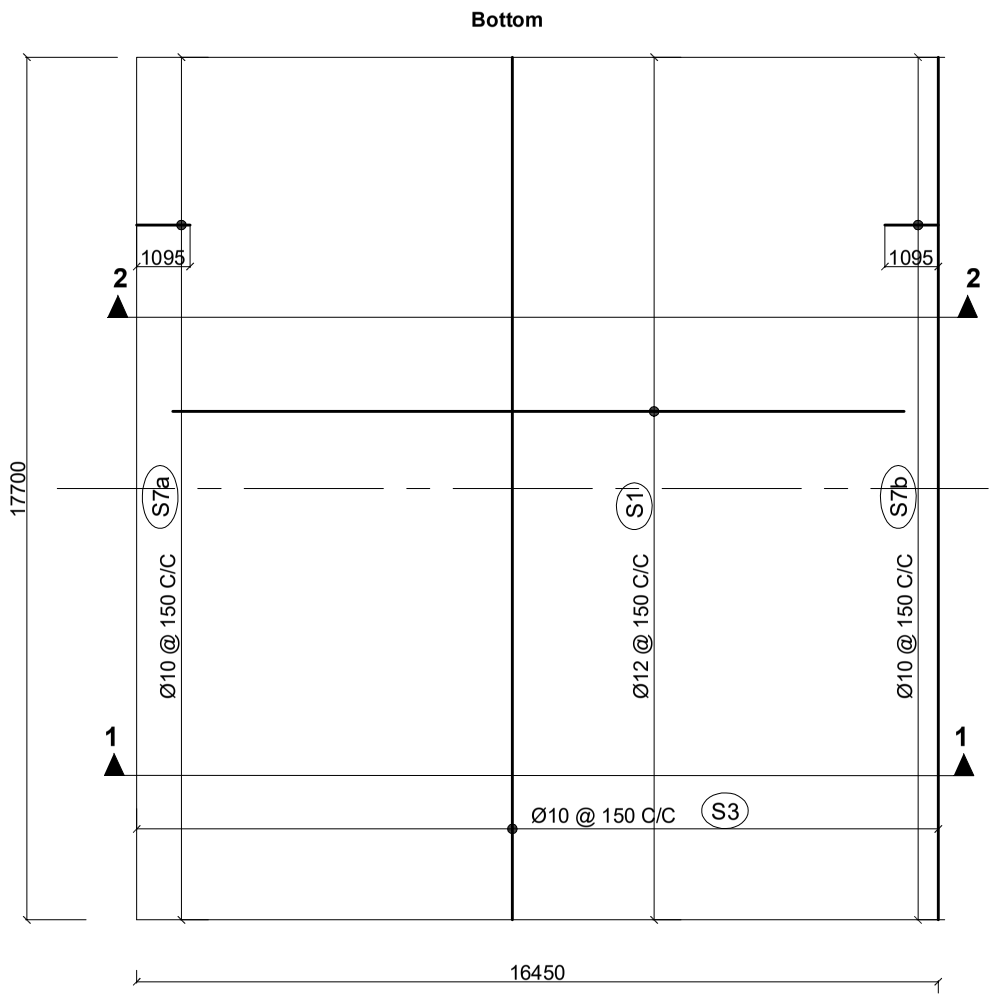

Reinforcement Details Of Deck Slab(Bottom Face)

Scale:-1:150

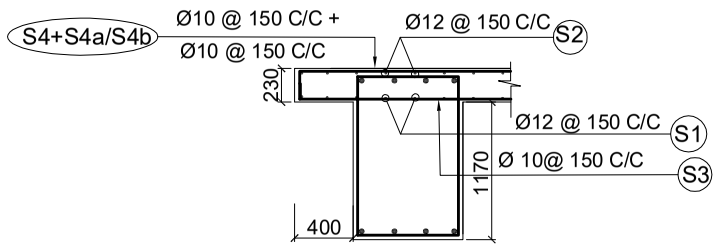

Reinforcement Details At Deck Extension

(Between The Main Girder)

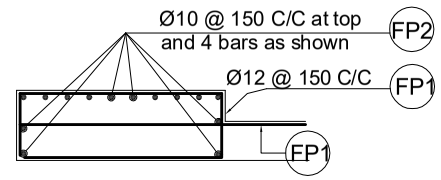

Reinforcement Details At Footpath

Scale:-1:50

NOTES:

1.ON SHEAR CONNECTION:
The transverse bars of the deck slab(S2) shall be tied to vertical stirrups of the longitudinal girders.

2.TOP SURFACE OF THE MAIN GIRDER:
Surface to be roughened by wire brush immediately after initial setting.
The surface shall be properly cleaned by pressure blower prior to casting of the deck concrete

3.ON WEARING COURSE:
The level of wearing course along the longitudinal direction shall be kept horizontal throughout the length of the deck. The thickness of wearing course towards the ends along the deck shall be increased suitably to compensate for the slope due to hogging of the girder by pre stress.

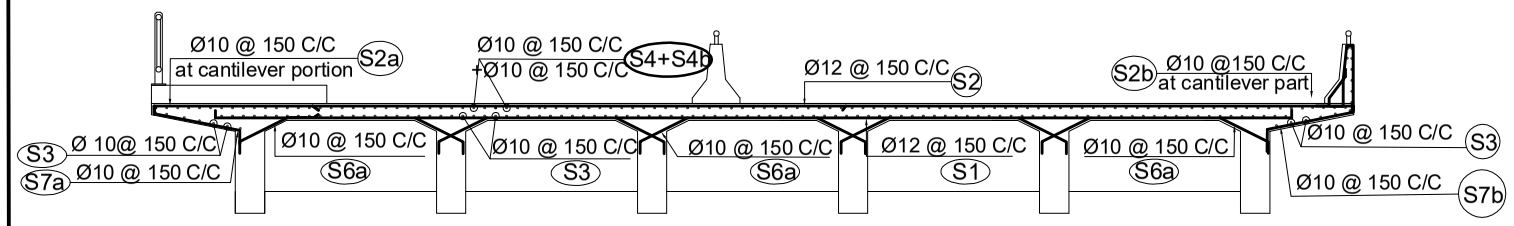

Section At 1-1

Scale:-1:100

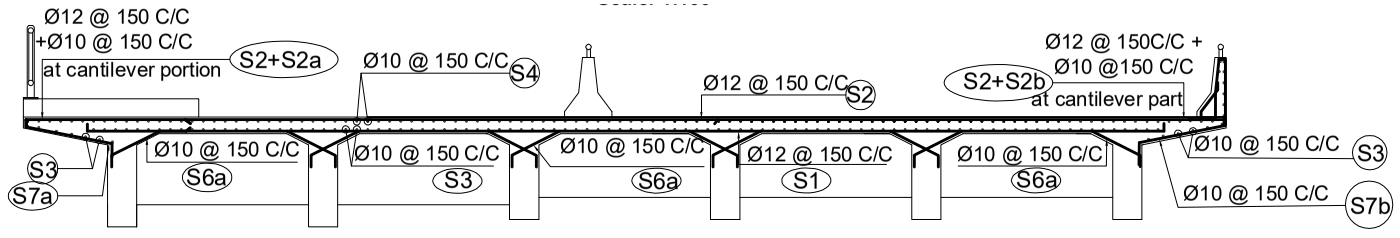

Section At 2-2

Scale:-1:100

Government of Nepal Ministry of Physical Infrastructure and Transport **Department of Roads** **Project Directorate Office (ADB)** **SASEC Highway Improvement Project-** **Project Preparatory Consultant (SHIP-PPC)** **ADB Loan No: 3722-NEP**	**CONSULTANT:** Soosung Engineering Co. Ltd, Korea in association with ERMC P (Ltd) and TSE-Tech Studio of Engineeering Nepal	**IMPLEMENTING AGENCY:** **DOR, DCID** **ROAD NAME:** **East West Highway (H01)** **Butwal - Gorusinghe Section**	**SHEET TITLE:** Reinforcement Details of Slab of **Narsinga Dry Nala Bridge** (46/H001/288_A,B)	**SCALE:** As Shown		**NAME**	**SIGNATURE**	**REV NO.**	**DESCRIPTION**	**DATE:** November , 2022 **DWG.NO.:** 288_Narsinga **SHEET NO.:** 07/19
					Designed by:	Saroj Bhattarai				
					Checked by:	P. Upadhyaya				
					Approved by:	Dr. T.H.Choi				

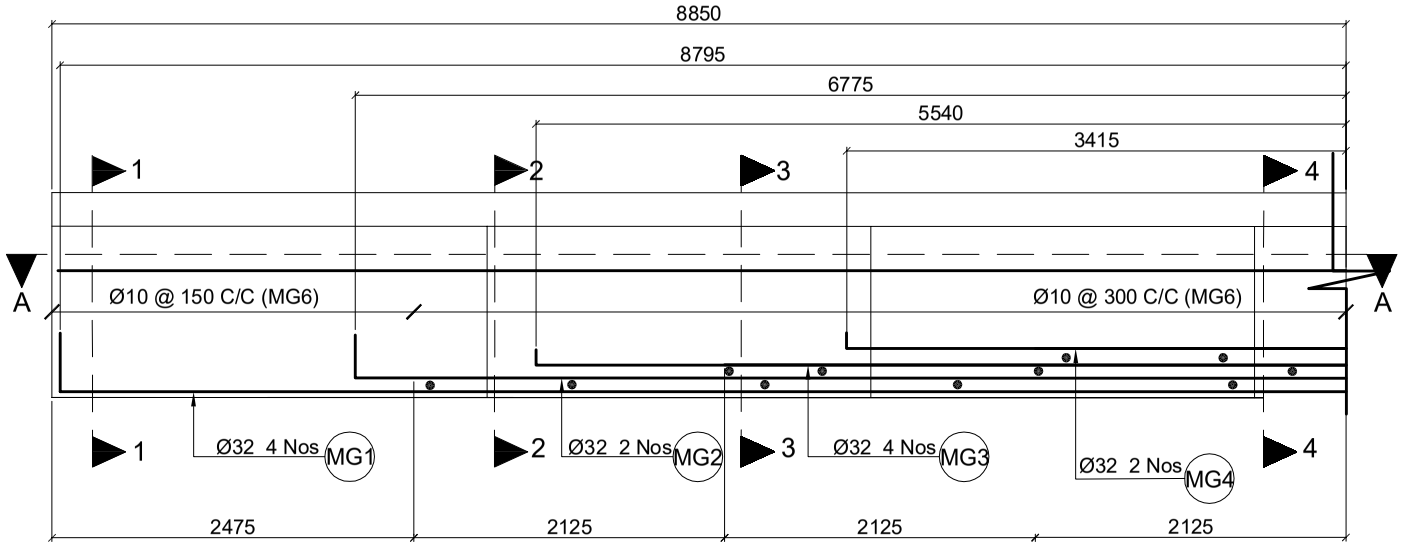

Reinforcement Details At Sectional Elevation Of Main Girder
Scale:-1:50

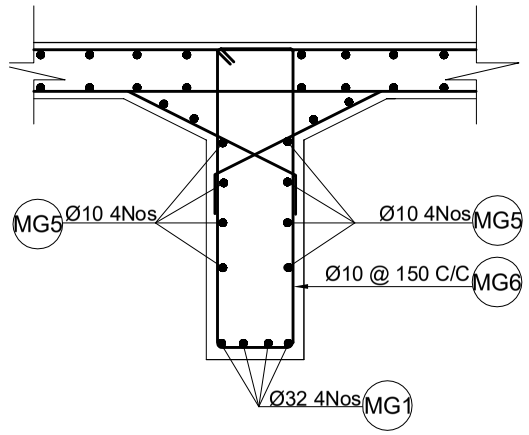

Section at 1-1
Scale:-1:30

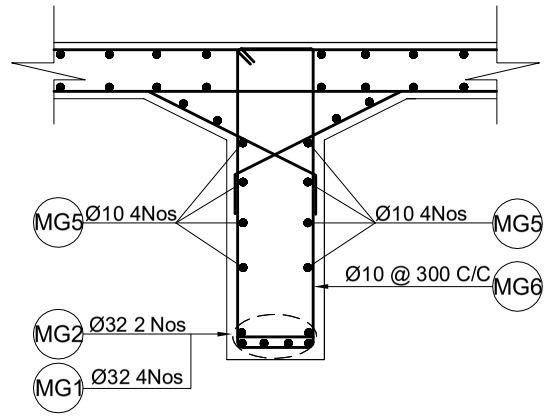

Section at 2-2
Scale:-1:30

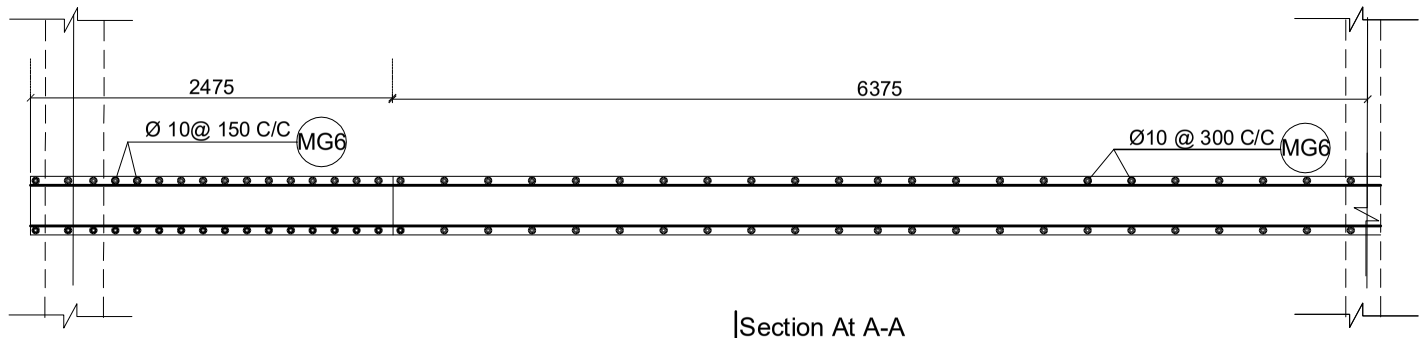

Section At A-A
Scale:-1:50

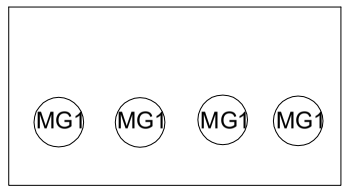

Diagram of Bar Position
Section at 1-1

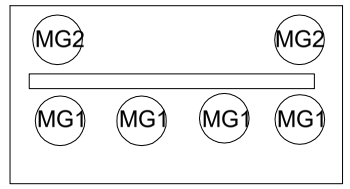

Diagram of Bar Position
Section at 2-2

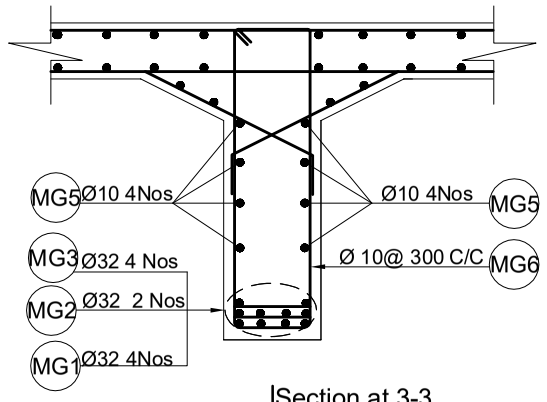

Section at 3-3
Scale:-1:30

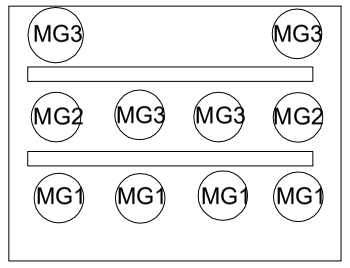

Diagram of Bar Position
Section at 3-3

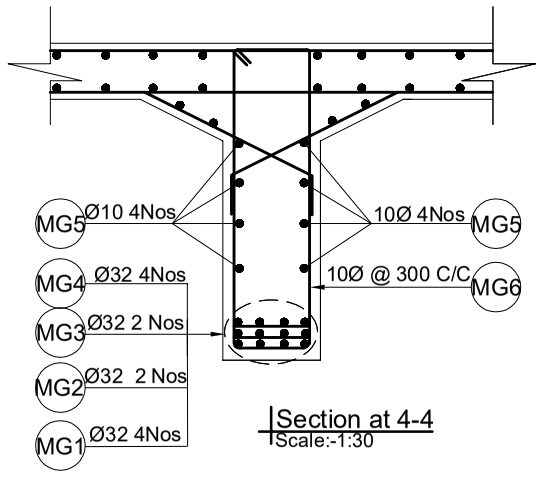

Section at 4-4
Scale:-1:30

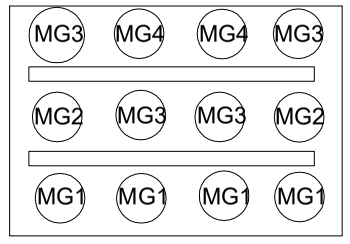

Diagram of Bar Position
Section at 4-4

Government of Nepal Ministry of Physical Infrastructure and Transport **Department of Roads** **Project Directorate Office (ADB)** **SASEC Highway Improvement Project-** **Project Preparatory Consultant (SHIP-PPC)** **ADB Loan No: 3722-NEP**	**CONSULTANT:** Soosung Engineering Co. Ltd, Korea in association with ERMC P (Ltd) and TE-Tech Studio of Engineeering Nepal	**IMPLEMENTING AGENCY:** **DOR, DCID** **ROAD NAME:** **East West Highway (H01)** **Butwal - Gorusinghe Section**	**SHEET TITLE:** Reinforcement Details of Main Girder of **Narsinga Dry Nala Bridge** (46/H001/288_A,B)	**SCALE:** As Shown		**NAME**	**SIGNATURE**	**REV NO.**	**DESCRIPTION**	**DATE:** November , 2022
					Designed by:	Saroj Bhattarai				**DWG.NO.:** 288_Narsinga
					Checked by:	P. Upadhyaya				
					Approved by:	Dr. T.H.Choi				**SHEET NO.:** 08/19

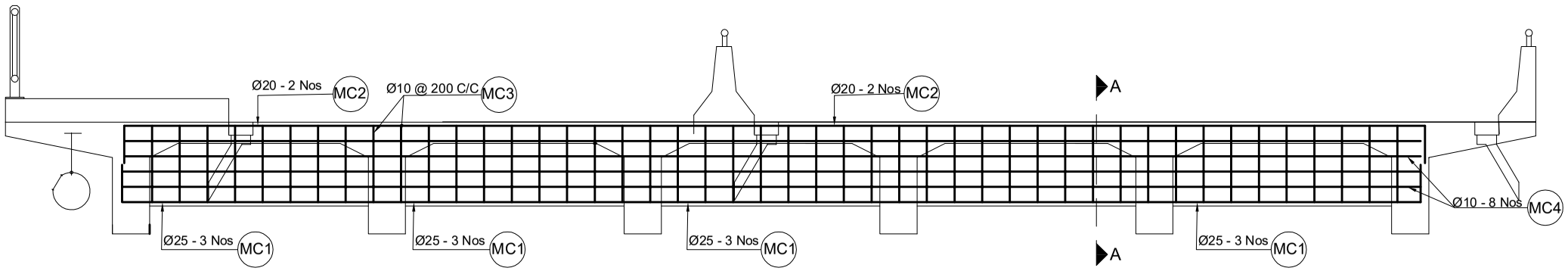

Intermediate Cross Girders
Scale:-1:50

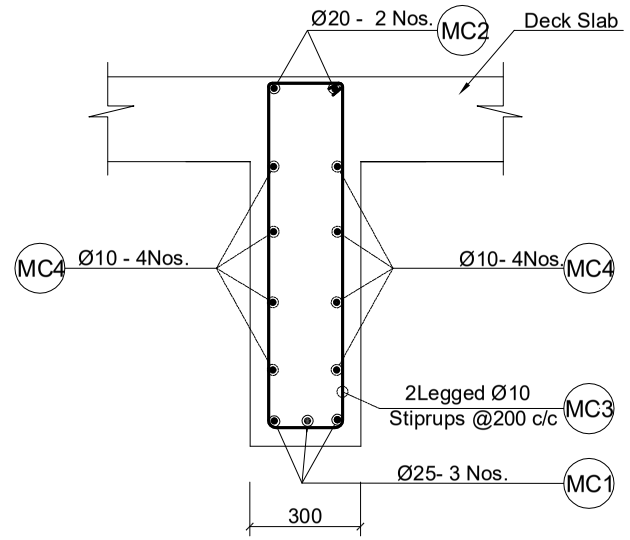

Section At A-A
Scale:-1:20

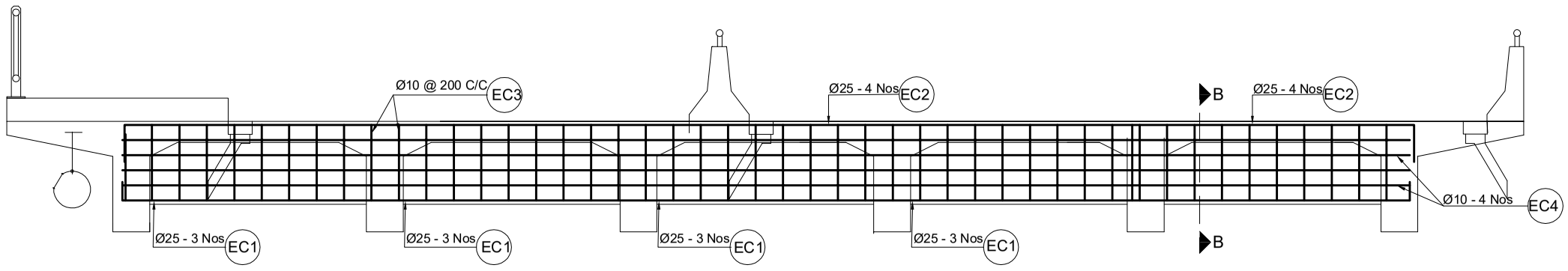

End Cross Girders
Scale:-1:50

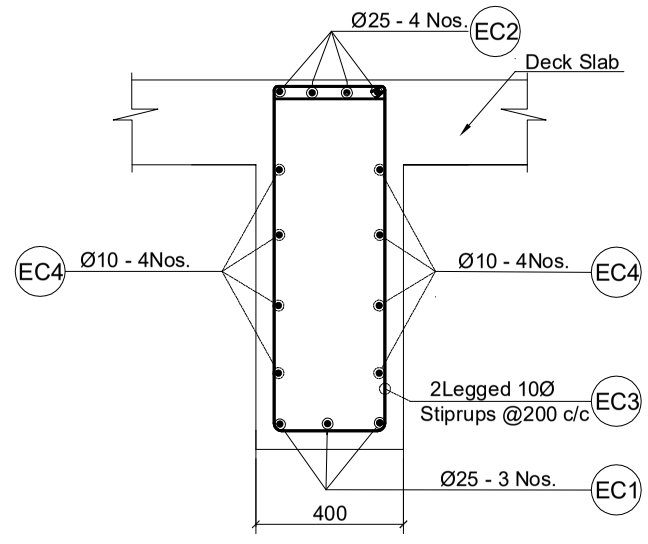

Section At B-B
Scale:-1:20

Government of Nepal Ministry of Physical Infrastructure and Transport **Department of Roads** **Project Directorate Office (ADB)** **SASEC Highway Improvement Project-** **Project Preparatory Consultant (SHIP-PPC)** **ADB Loan No: 3722-NEP**	**CONSULTANT:** Soosung Engineering Co. Ltd, Korea in association with ERMC P (Ltd) and FK-Tech Studio of Engineeering Nepal	**IMPLEMENTING AGENCY:** **DOR, DCID** **ROAD NAME:** **East West Highway (H01)** **Butwal - Gorusinghe Section**	**SHEET TITLE:** Reinforcement Details of Cross Girders of **Narsinga Dry Nala Bridge** (46/H001/288_A,B)	**SCALE:** As Shown		**NAME**	**SIGNATURE**	**REV NO.**	**DESCRIPTION**	**DATE:** November , 2022
					Designed by:	Saroj Bhattarai				**DWG.NO.:** 288_Narsinga
					Checked by:	P. Upadhyaya				
					Approved by:	Dr. T.H.Choi				**SHEET NO.:** 09/19

BAR BENDING SCHEDULE OF DECK SLAB

BAR ID	SKETCH (mm)	SPACING (mm)	Ø OF BARS (mm)	NO. OF BARS	LENGTH (m)	WEIGHT/LENGTH (kg/m)	TOTAL WEIGHT (kg)
S1	14750 100	150/ 7Nos meter	12	119	14.950	0.888	1579.469
S2	16358 100	150/ 7Nos meter	12	119	16.560	0.888	1749.566
S2a	100 2150 Additional Bars At Left Cantilever	150 In Between S2	10	119	2.250	0.617	165.078
S2b	2150 100 Additional Bars At Right Cantilever	150 In Between S2	10	119	2.250	0.617	165.078
S3	17610 155	Med Deck 150	10	100	17.920	0.617	1104.838
		Left Cantilever 150	10	10	17.920	0.617	110.484
		Right Cantilever 150	10	10	17.920	0.617	110.484
S4	17610 155	150/ 7Nos Per Meter	10	111	17.920	0.617	1226.370
S4a	155 2200 Additional Bars At Left Deck End	150 In Between S4	10	111	2.355	0.617	161.166
S4b	2200 155 Additional Bars At Right Deck End	150 In Between S4	10	111	2.355	0.617	161.166
S6a	360 733 160	150	8	1100 (10X110)	1.250	0.395	542.554
S7a	100 1095 200 Outer Side Of Left Exterior Girder	150/ 7Nos Per Meter	10	238	1.400	0.617	205.431
S7b	1095 100 200 Outer Side Of Right Exterior Girder	150/ 7Nos Per Meter	10	238	1.400	0.617	205.431
TOTAL EXCLUDING FOOTPATHS (in kg)							7487.116
TOTAL WEIGHT (IN METRIC TON)							7.487

BAR BENDING SCHEDULE FOR RCC MAIN GIRDER

BAR ID	SKETCH (mm)	SPACING (mm)	Ø OF BARS (mm)	NO. OF BARS	LENGTH (m)	WEIGHT/LENGTH (kg/m)	TOTAL WEIGHT (kg)
MG1	17585 400	@ 300 c/c	32	4	18.390	6.313	464.411
MG2	13550 200	@ 300 c/c	32	2	13.950	6.313	176.143
MG3	11080 200	@ 300 c/c	32	4	11.480	6.313	289.909
MG4	6830 200	@ 300 c/c	32	2	7.230	6.313	91.291
MG5	17620	@ 200 c/c	10	8	17.620	0.617	86.907
MG6	2*75 1110 310	varies (@ 300 c/c,@150 c/c at support)	10	84	2.990	0.617	154.850
MG7	320 Spacer Bar	-	32	28	0	6.313	56.568
TOTAL WEIGHT IN 1GIRDER (in kg)							1320.079
TOTAL NUMBER OF GIRDERS AND TOTAL WEIGHT (IN METRIC TON)							1.320

BAR BENDING SCHEDULE FOR END CROSS GIRDERS

BAR ID	SKETCH (mm)	SPACING (mm)	Ø OF BARS (mm)	NO. OF BARS	LENGTH (m)	WEIGHT/LENGTH (kg/m)	TOTAL WEIGHT (kg)
EC1	14045 400	@ 92 c/c	25	3	14.845	3.853	171.610
EC2	14045 400	varies(@ 138 c/c, @ 276 c/c)	25	4	14.845	3.853	228.813
EC3	2*60 1110 310	@ 200 c/c	10	72	2.360	0.617	104.762
EC4	14070 2X4 Nos each Face	300 c/c	10	8	14.070	0.617	69.398
TOTAL WEIGHT IN 1GIRDER(in kg)							574.583
TOTAL NUMBER OF GIRDERS AND TOTAL WEIGHT 2 (IN METRIC TON)							1.149

BAR BENDING SCHEDULE FOR INTERMEDIATE CROSS GIRDERS

BAR ID	SKETCH (mm)	SPACING (mm)	Ø OF BARS (mm)	NO. OF BARS	LENGTH (m)	WEIGHT/LENGTH (kg/m)	TOTAL WEIGHT (kg)
MC1	13945 400 2X2 Nos Each Row	@ 175 c/c	25	3	14.745	3.853	170.454
MC2	13945 400	@ 175 c/c	20	2	14.745	2.466	72.727
MC3	2*60 1110 210	@ 200 c/c	10	69	2.160	0.617	91.889
MC4	13970 2X4 Nos Each Face		8	8	13.970	0.395	44.099
TOTAL WEIGHT IN 1GIRDER(in kg)							379.168
TOTAL NUMBER OF GIRDERS AND TOTAL WEIGHT 1 (IN METRIC TON)							0.379

BAR BENDING SCHEDULE OF **RAISED FOOTPATH**

BAR ID	SHAPE OF BAR IN mm (NOT TO SCALE)	SPACING (MM)	Ø OF BARS (mm)	NO. OF BARS	LENGTH (m)	WEIGHT/LENGTH (kG/m)	TOTAL WEIGHT (kG)
FP1	2320 2*100 400	150	12	119	5.640	0.888	595.867
FP2	17610	150	10	21	17.610	0.617	228.002
ONE SIDE							823.869
TOTAL WEIGHT IN METRIC TON							0.824

Government of Nepal
Ministry of Physical Infrastructure and Transport
Department of Roads
Project Directorate Office (ADB)
SASEC Highway Improvement Project-
Project Preparatory Consultant (SHIP-PPC)
ADB Loan No: 3722-NEP

CONSULTANT: Soosung Engineering Co. Ltd, Korea in association with ERMC P (Ltd) and FSC-Tech Studio of Engineeering Nepal

IMPLEMENTING AGENCY: DOR, DCID

ROAD NAME: East West Highway (H01)

Butwal - Gorusinghe Section

SHEET TITLE: Detail of barbending Shedule of **Narsinga Dry Nala Bridge** (46/H001/288_A,B)

SCALE: As Shown

	NAME	SIGNATURE	REV NO.	DESCRIPTION
Designed by:	Saroj Bhattarai			
Checked by:	P. Upadhyaya			
Approved by:	Dr. T.H.Choi			

DATE: November , 2022

DWG.NO.: 288_Narsinga

SHEET NO.: 10/19

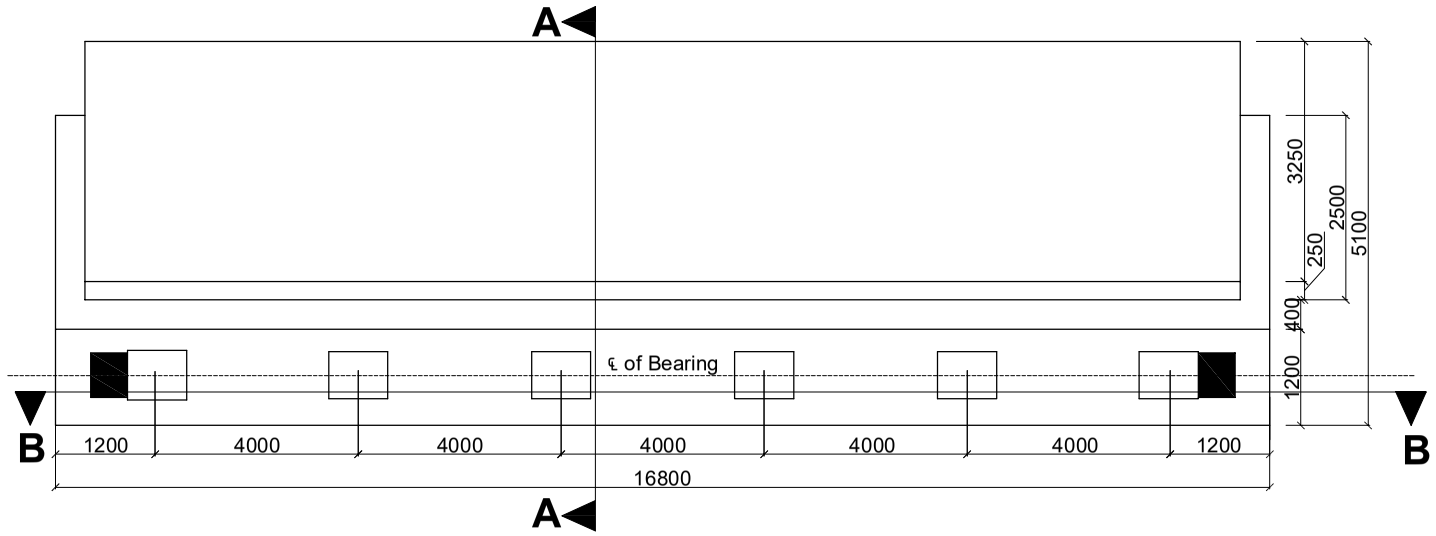

Plan Of Abutment
Scale:-1:100

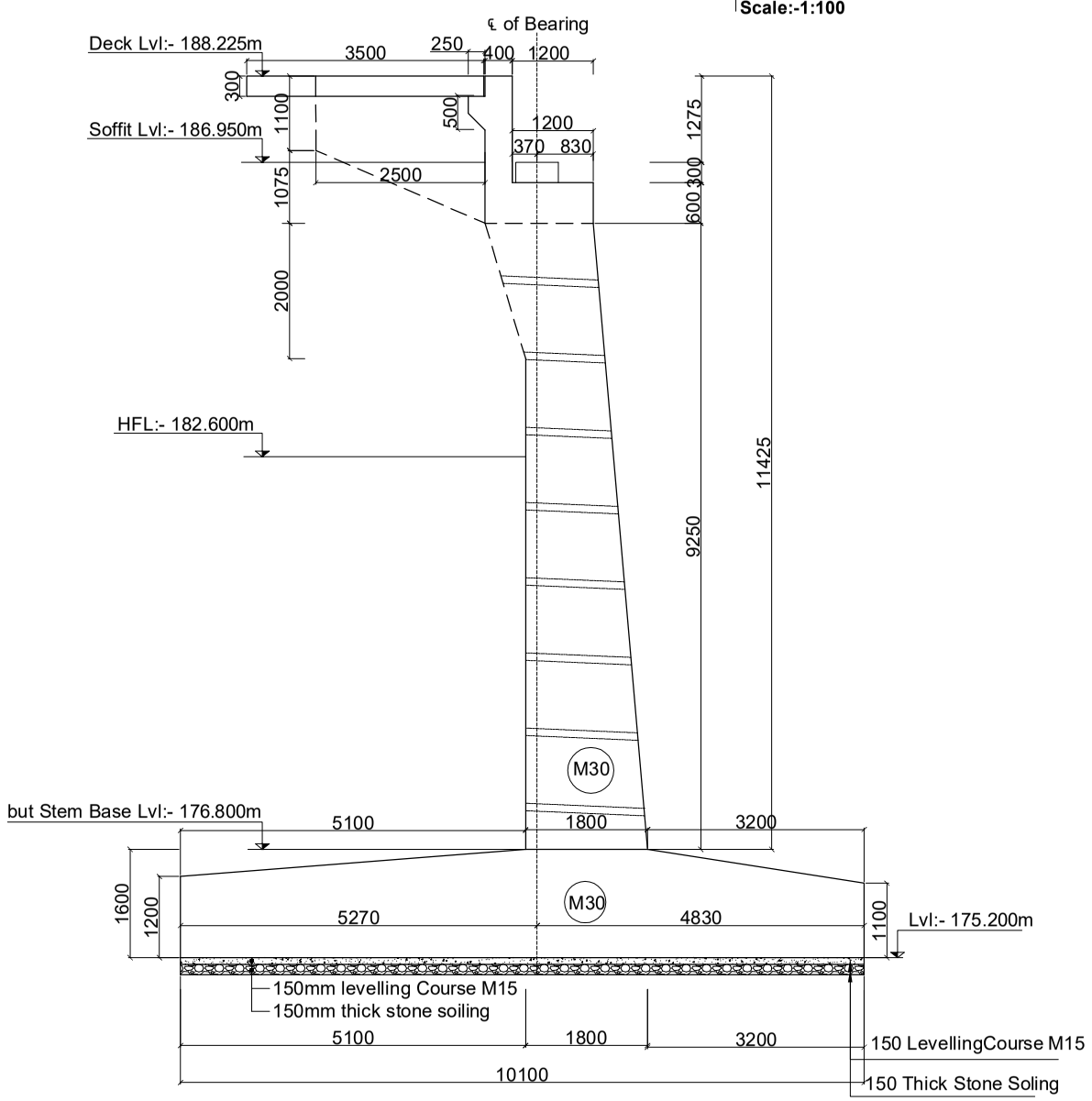

Section of Abutment At (A-A)
Scale:-1:100

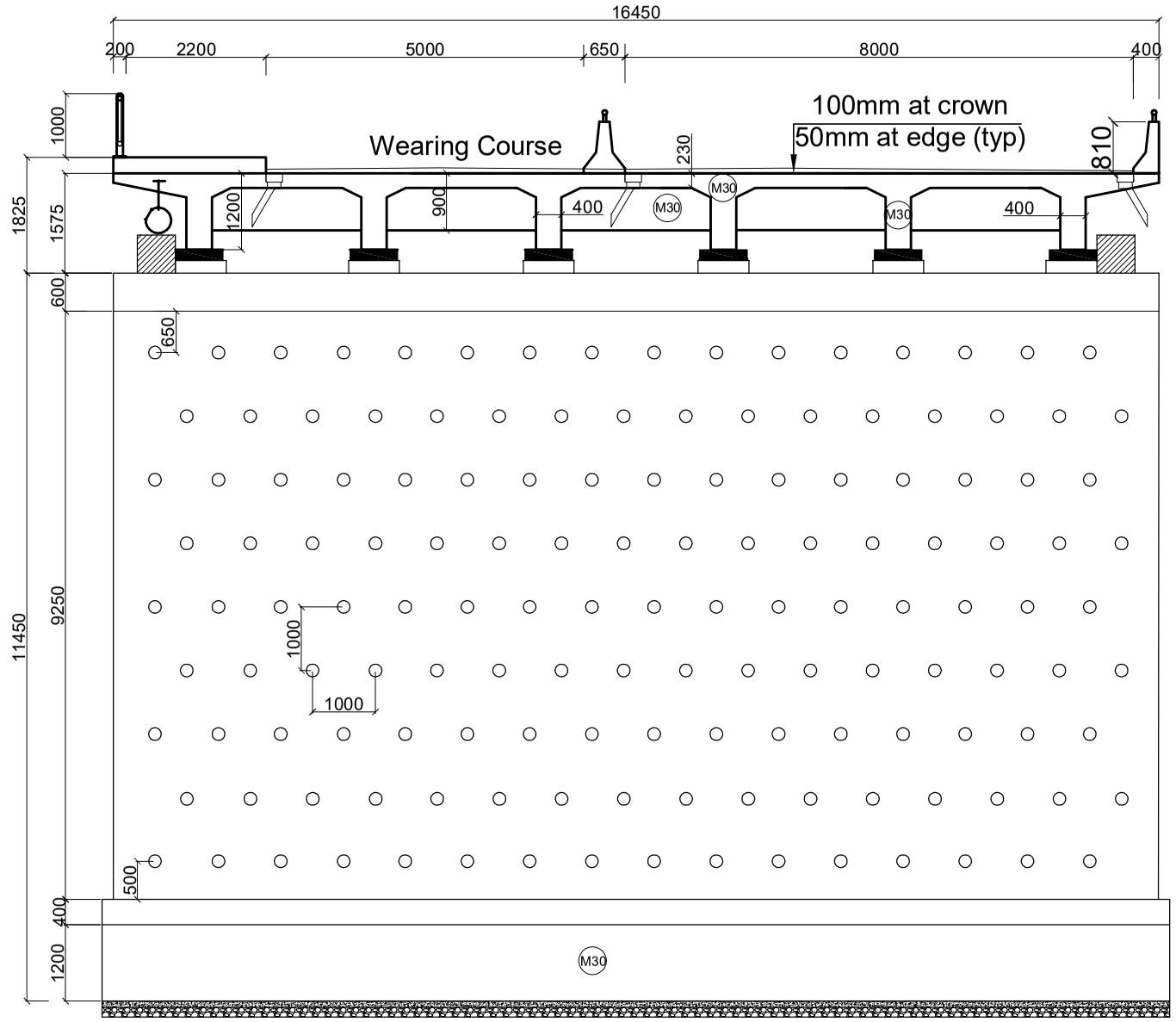

Section Of Abutment At (B-B)
Scale:-1:100

Government of Nepal Ministry of Physical Infrastructure and Transport **Department of Roads** **Project Directorate Office (ADB)** **SASEC Highway Improvement Project-** **Project Preparatory Consultant (SHIP-PPC)** **ADB Loan No: 3722-NEP**	**CONSULTANT:** Soosung Engineering Co. Ltd, Korea in association with ERMC P (Ltd) and TK-Tech Studio of Engineeering Nepal	**IMPLEMENTING AGENCY:** **DOR, DCID** **ROAD NAME:** **East West Highway (H01)** **Butwal - Gorusinghe Section**	**SHEET TITLE:** Abutment Details of Narsinga Dry Nala Bridge (46/H001/288_A,B)	**SCALE:** As Shown		**NAME**	**SIGNATURE**	**REV NO.**	**DESCRIPTION**	**DATE:** November , 2022
					Designed by:	Saroj Bhattarai				**DWG.NO.:** 288_Narsinga
					Checked by:	P. Upadhyaya				
					Approved by:	Dr. T.H.Choi				**SHEET NO.:** 11/19

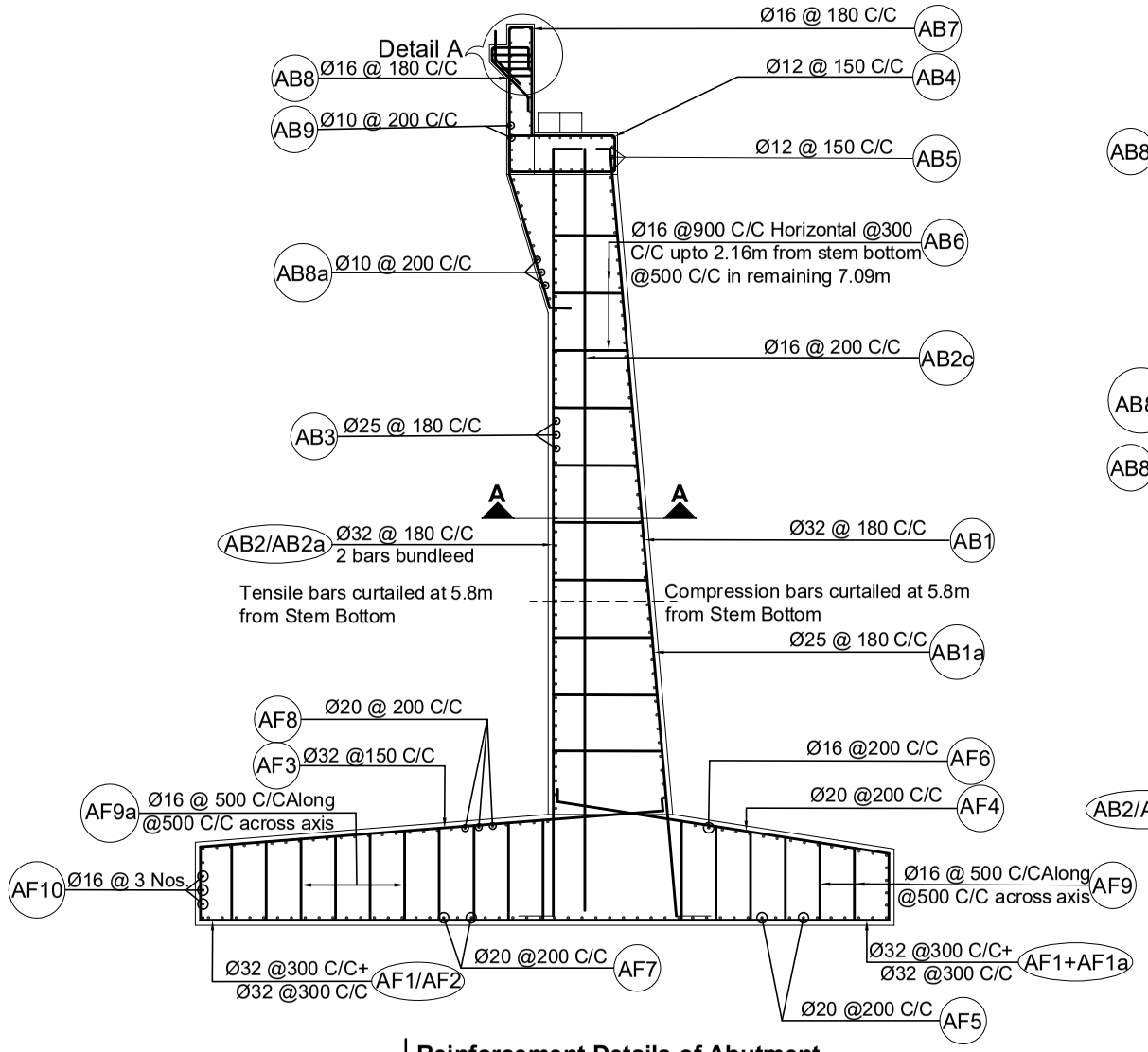

Reinforcement Details of Abutment
Scale:-1:100

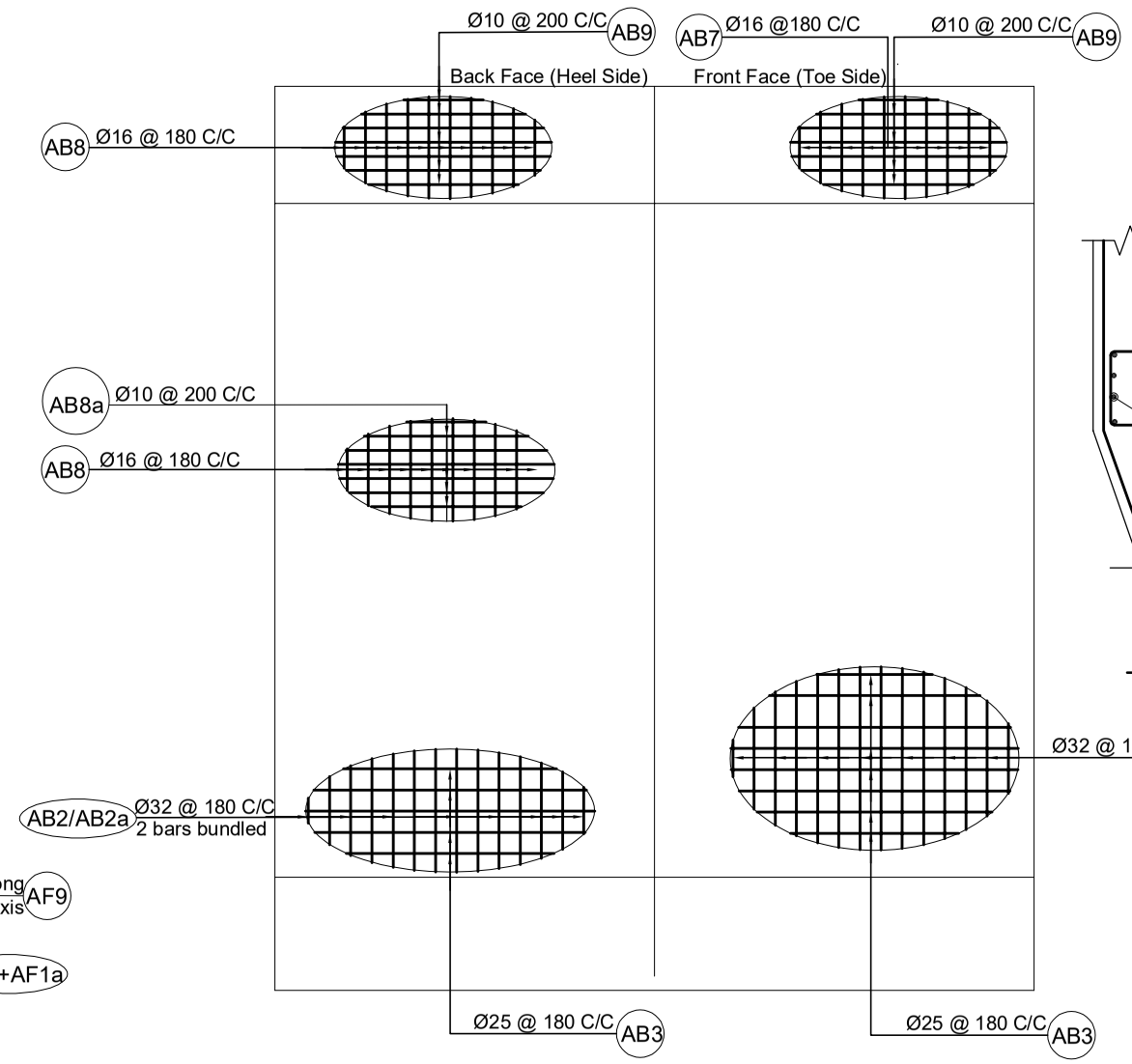

Reinforcement Details of Abutment
Scale:-1:100

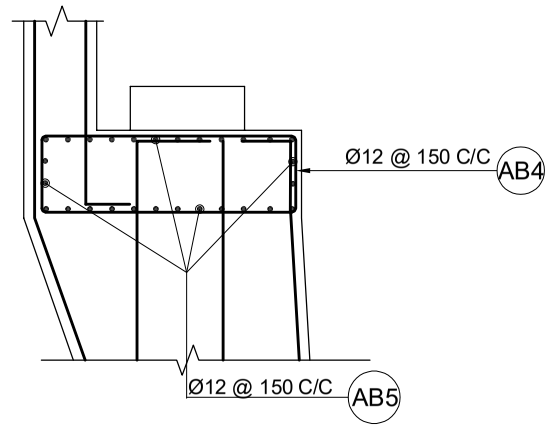

Reinforcement Details Of Abutment Cap
Scale:-1:50

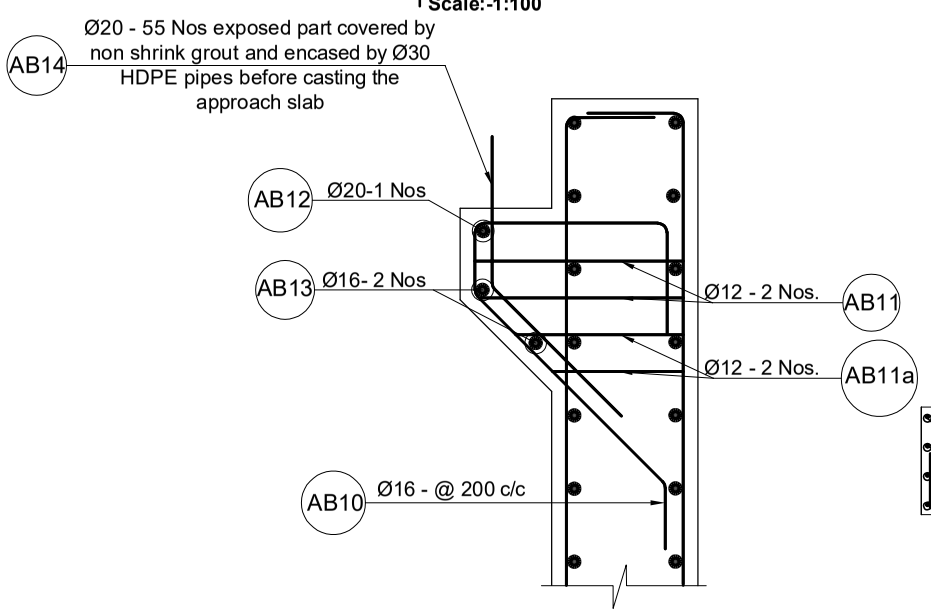

Detail at A
Scale:-1:20

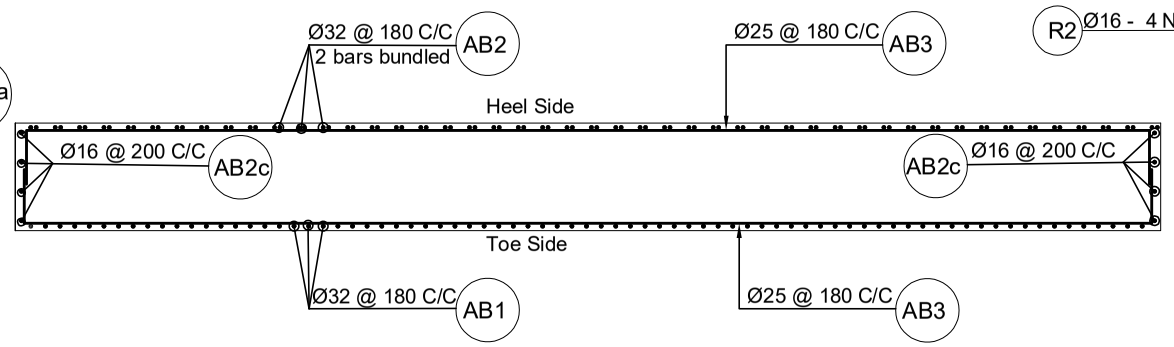

Section at A-A
Scale:-1:75

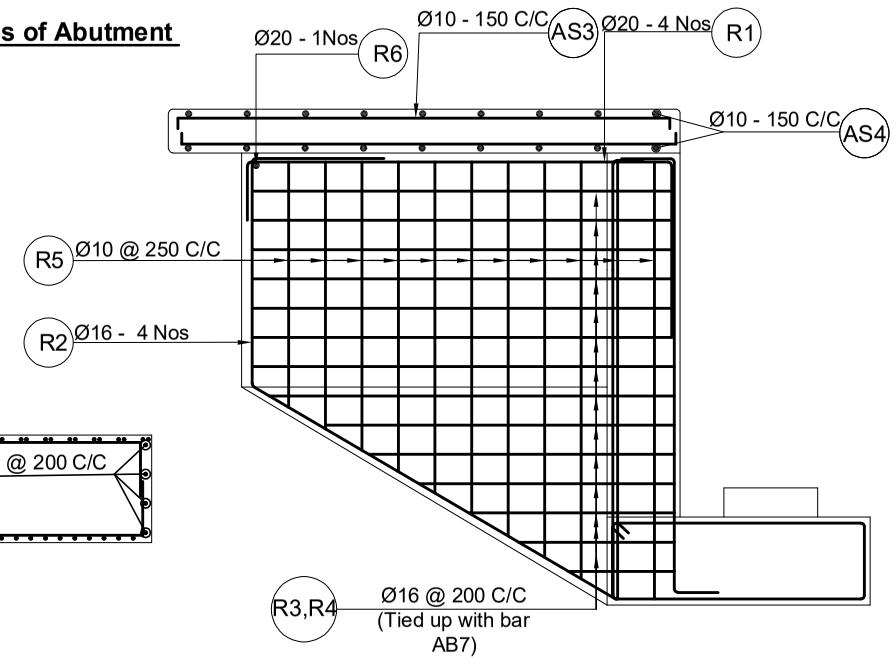

Reinforcement Details Of Wingwall
Scale:-1:50

Government of Nepal Ministry of Physical Infrastructure and Transport **Department of Roads** **Project Directorate Office (ADB)** **SASEC Highway Improvement Project-** **Project Preparatory Consultant (SHIP-PPC)** **ADB Loan No: 3722-NEP**	**CONSULTANT:** Soosung Engineering Co. Ltd, Korea in association with ERMC P (Ltd) and TSE-Tech Studio of Engineeering Nepal	**IMPLEMENTING AGENCY:** **DOR, DCID** **ROAD NAME:** **East West Highway (H01)** **Butwal - Gorusinghe Section**	**SHEET TITLE:** Reinforcement Details of Abutment of Narsinga Dry Nala Bridge (46/H001/288_A,B)	**SCALE:** As Shown		**NAME**	**SIGNATURE**	**REV NO.**	**DESCRIPTION**	**DATE:** November , 2022 **DWG.NO.:** 288_Narsinga **SHEET NO.:** 12/19
					Designed by:	Saroj Bhattarai				
					Checked by:	P. Upadhyaya				
					Approved by:	Dr. T.H.Choi				

BAR BENDING SCHEDULE OF ABUTMENT

BAR ID	SHAPE OF BAR IN mm (NOT TO SCALE)	SPACING (mm)	Ø OF BARS (mm)	NO. OF BARS	LENGTH (m)	WEIGHT/LENGTH (Kg/m)	TOTAL WEIGHT (Kg)
AB1	300; 7300; 95 deg; 500	180 mm c/c Approx	32	92	8.100	6.313	4704.715
AB1a	300; 5000	180 mm c/c Approx	25	92	5.3	3.853	1878.903
AB2	500; 11224; 500	180 mm c/c Approx	32	92	12.224	6.313	7100.054
			Provided as bundle of 2*92				
AB2 a	500; 9200; 500	180 mm c/c Approx	32	92	10.200	6.313	5924.456
AB2 c	11220; 500	At sideface 200 mm c/c	16	16	11.720	1.578	295.970
AB3	avg.16280; avg.1375	180 mm c/c	25	41	35.310	3.853	5578.560
AB3a	16280; avg.1175	200 mm c/c Approx	16	12	34.910	1.578	661.198
AB4	1440; 515; 2*100	150 mm c/c Approx	12	111	4.110	0.888	405.031
AB5	16300	150 mm c/c Approx	12	27	16.300	0.888	390.728
AB6	Varies 1670-870; Hook L = 100; Horizontal spacing: 900 c/c hotizontal (through the height); Vertical spacing: 300 c/c up 2.16 m from stem bottom, 500 c/c for remaining 7.09 m		16	460	1.598	1.578	1160.206
AB7	260; 2175; 300	180 mm c/c Approx	16	92	2.725	1.578	395.690
AB8	2105; 260; 2089; 300	180 mm c/c Approx	16	92	4.753	1.578	690.170
AB8a	16300	200 mm c/c Approx	10	12	16.300	0.617	120.595
AB9	16300; 268	200 mm c/c Approx	10	9	33.116	0.617	183.756
AB10	110; 510; 300; 655; 200	200 mm c/c Approx	16	79	1.775	1.578	221.323
AB11	510; 200		12	158	0.910	0.888	127.650
AB11a	255 Average; 200		12	158	0.655	0.888	91.880
AB12	16310		20	1	16.310	2.466	40.223
AB13	16310		16	2	16.310	1.578	51.485
AB14	400; 500		20	55	0.900	2.466	122.075
TOTAL WEIGHT ABUTMENT KG							30144.669
TOTAL WEIGHT (IN METRIC TON)							30.145

BAR BENDING SCHEDULE FOR ABUTMENT PILECAP

BAR ID	SHAPE OF BAR IN mm (NOT TO SCALE)	SPACING (mm)	Ø OF BARS (mm)	NO. OF BARS	LENGTH (m)	WEIGHT/LENGTH (Kg/m)	TOTAL WEIGHT (Kg)
AF1	9918; 800	300	32	56	11.458	6.313	4050.954
AF1(a)	4480; 740	300	32	56	5.520	6.313	1951.586
AF2	800; 6900; 200	300	25	56	7.900	3.853	1704.730
AF3	6845; 800	150	32	110	7.645	6.313	5309.220
AF4	4965; 740	0	20	110	5.705	2.466	1547.636
AF5	600; 16280; 600; Distribution bars toe bottom	200	20	22	17.480	2.466	948.385
AF6	16280; 600; Distribution bars toe bottom	200	16	18	17.480	1.578	496.609
AF7	600; 16280; Distribution bars toe bottom	200	20	31	17.480	2.466	1336.361
AF8	16280; 600; Distribution bars toe bottom	200	20	27	17.480	2.466	1163.927
AF9	1370-870; Curve length = 130; Curve radius = 40; Hook length = 80; Shear link Toe Side	0	16	272	1.540	1.578	661.135
AF9a	1370-970; Curve length = 130; Curve radius = 40; Hook length = 80; Shear link Heel Side	0	16	408	1.590	1.578	1023.901
AF10	16300; 9950	0	16	3	52.500	1.578	248.589
TOTAL IN PILE OF ONE ABUTMENT							20443.032
TOTAL WEIGHT (IN METRIC TON)							20.443

BAR BENDING SCHEDULE FOR WINGWALL

BAR ID	SHAPE OF BAR IN mm (NOT TO SCALE)	SPACING (mm)	Ø OF BARS (mm)	NO. OF BARS	LENGTH (m)	WEIGHT/LENGTH (Kg/m)	TOTAL WEIGHT (Kg)
R1	400; 2785; 1200	0	20	8	4.385	2.466	86.513
R2	1050; 300; 2725	0	16	8	4.075	1.578	51.454
R3	320; 2800; 2*150	200	16	12	6.540	1.578	123.868
R4	320; avg.1350; 2*150	200	16	12	3.640	1.578	68.942
R5	268; avg.1638	250	10	22	4.110	0.617	55.747
R6	320	0	20	2	0.320	2.466	1.578
R7	2400	0	10	4	2.400	0.617	5.919
R8	350; 250	0	10	13	1.320	0.617	10.580
TOTAL IN 2 WINGWALL IN ONE ABUTMENT							404.601
TOTAL WEIGHT (IN METRIC TON)							0.405

Government of Nepal
Ministry of Physical Infrastructure and Transport
Department of Roads
Project Directorate Office (ADB)
SASEC Highway Improvement Project-
Project Preparatory Consultant (SHIP-PPC)
ADB Loan No: 3722-NEP

CONSULTANT: Soosung Engineering Co. Ltd, Korea in association with ERMC P (Ltd) and TIE-Tech Studio of Engineeering Nepal

IMPLEMENTING AGENCY: DOR, DCID

ROAD NAME: East West Highway (H01)

Butwal - Gorusinghe Section

SHEET TITLE: Barbending Schedule of Narsinga Dry Nala Bridge (46/H001/288_A,B)

SCALE: As Shown

	NAME	SIGNATURE	REV NO.	DESCRIPTION
Designed by:	Saroj Bhattarai			
Checked by:	P. Upadhyaya			
Approved by:	Dr. T.H.Choi			

DATE: November , 2022

DWG.NO.: 288_Narsinga

SHEET NO.: 13/19

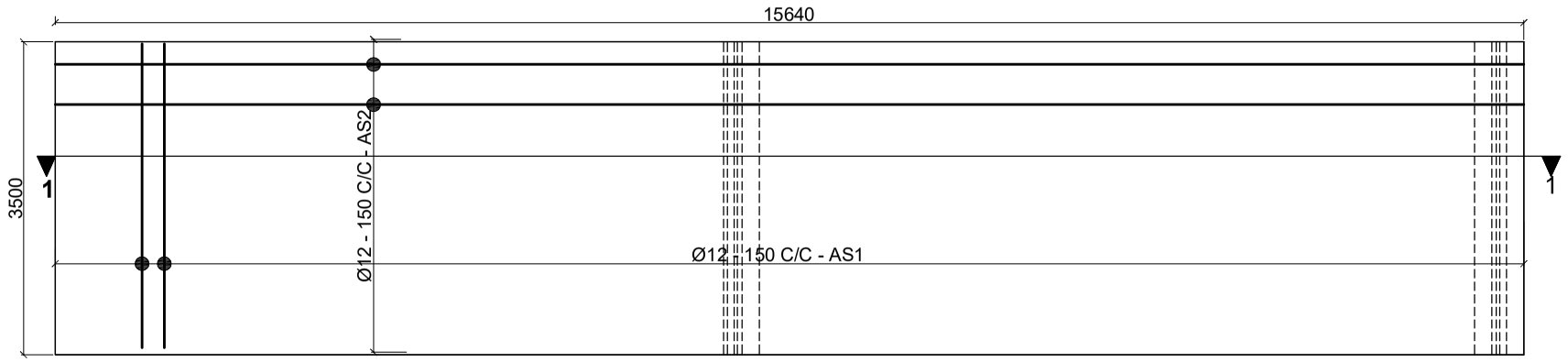

Plan of Reinforcement Details of Approach Slab
Scale:-1:75

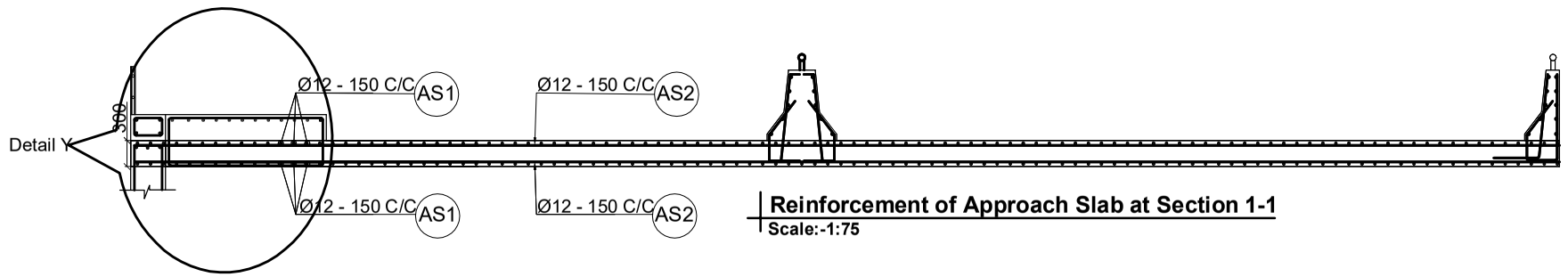

Reinforcement of Approach Slab at Section 1-1
Scale:-1:75

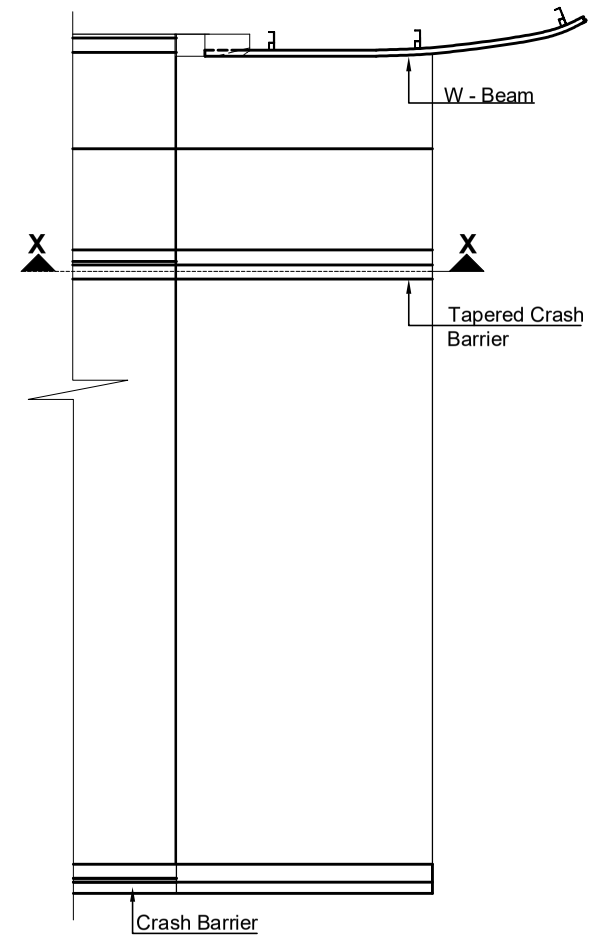

Plan of Approach Slab
Not to Scale

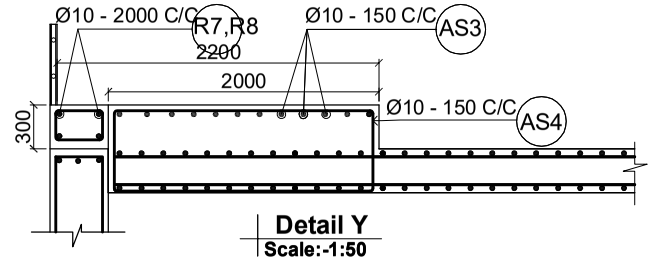

Detail Y
Scale:-1:50

BAR BENDING SCHEDULE OF APPROACH SLAB

BAR ID	SHAPE OF BAR IN mm (NOT TO SCALE)	SPACING (mm)	Ø OF BARS (mm)	NO. OF BARS	LENGTH (m)	WEIGHT/LENGTH (Kg/m)	TOTAL WEIGHT (Kg)
AS1	3400	-	12	210	3.400	0.888	633.901
AS2	15550	-	12	48	15.550	0.888	662.666
AS3	3400		10	15	3.400	0.617	31.443
AS4	1920, 520		10	18	5.000	0.617	55.489
TOTAL IN ONE APPROACH SLAB							1383.499
TOTAL WEIGHT IN METRIC TON							1.383

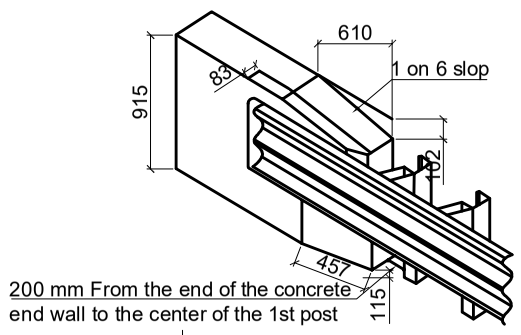

End Block Part Details
Scale:-1:50

Eleavation
Scale:-1:50

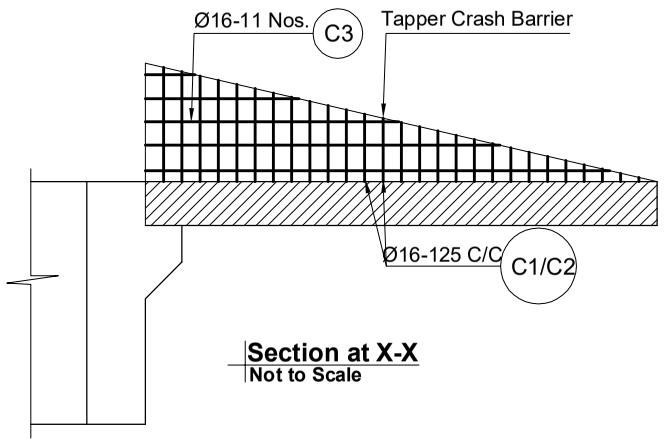

Section at X-X
Not to Scale

Government of Nepal Ministry of Physical Infrastructure and Transport **Department of Roads** **Project Directorate Office (ADB)** **SASEC Highway Improvement Project-** **Project Preparatory Consultant (SHIP-PPC)** **ADB Loan No: 3722-NEP**	**CONSULTANT:** Soosung Engineering Co. Ltd, Korea in association with ERMC P (Ltd) and J.K.-Tech Studio of Engineeering Nepal	**IMPLEMENTING AGENCY:** **DOR, DCID** **ROAD NAME:** **East West Highway (H01)** **Butwal - Gorusinghe Section**	**SHEET TITLE:** Approach Slab of Narsinga Dry Nala Bridge (46/H001/288_A,B)	**SCALE:** As Shown		**NAME**	**SIGNATURE**	**REV NO.**	**DESCRIPTION**	**DATE:** November , 2022 **DWG.NO.:** 288_Narsinga **SHEET NO.:** 14/19
					Designed by:	Saroj Bhattarai				
					Checked by:	P. Upadhyaya				
					Approved by:	Dr. T.H.Choi				

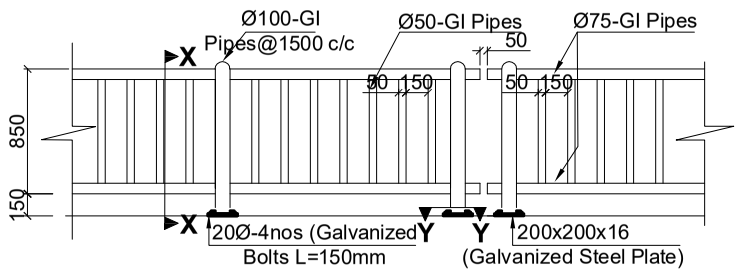

Railing Post Details
Scale:-1:50

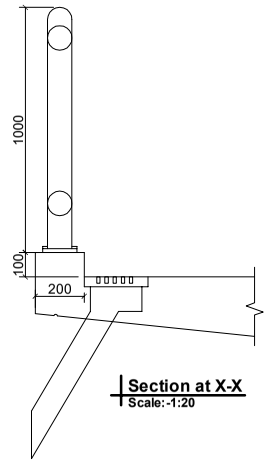

Section at X-X
Scale:-1:20

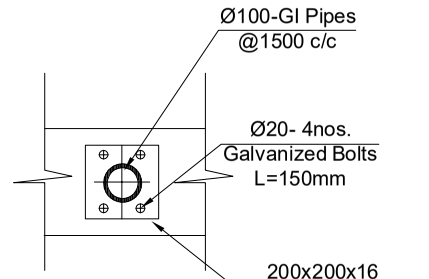

Section at Y-Y
Scale:-1:20

BAR BENDING SCHEDULE OF CENTRAL CRASH BARRIER

BAR ID	SHAPE OF BAR IN mm (NOT TO SCALE)	SPACING (MM)	Ø OF BARS (mm)	NO. OF BARS	LENGTH (m)	WEIGHT/LENGTH (kG/m)	TOTAL WEIGHT (kG)
C1	575, 250, 555	125	16	8	2.210	1.578	27.905
C2	915, 730	125	16	16	1.645	1.578	41.542
C3	960		16	11	0.960	1.578	16.667
TOTAL FOR 1M							86.114
TOTAL FOR 1.0M IN MT							0.086

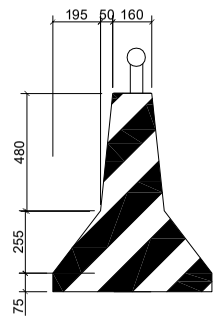

Painting Work on The Bridge Deck
Scale:-1:20

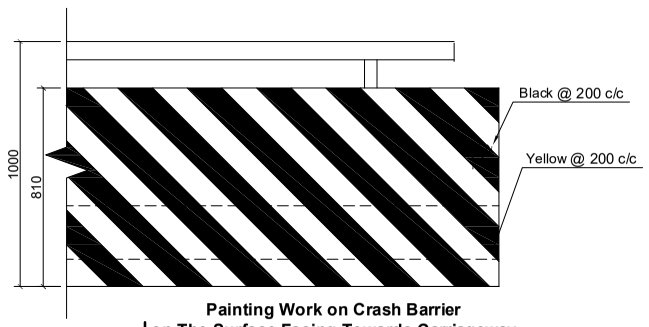

Painting Work on Crash Barrier on The Surface Facing Towards Carriageway
Scale:-1:20

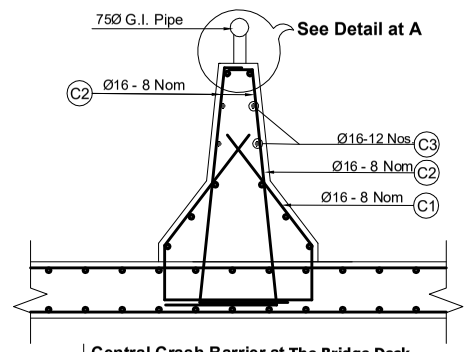

Central Crash Barrier at The Bridge Deck
Scale:-1:20

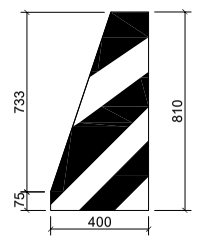

Painting Work on Tapper Crash Barrier
Scale:-1:20

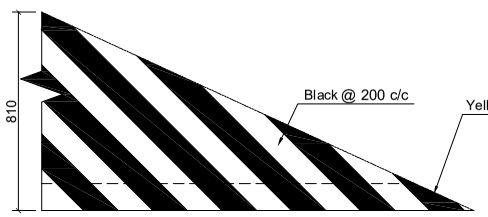

Painting Work on Crash Barrier on The Surface Facing Towards Carriageway
Scale:-1:20

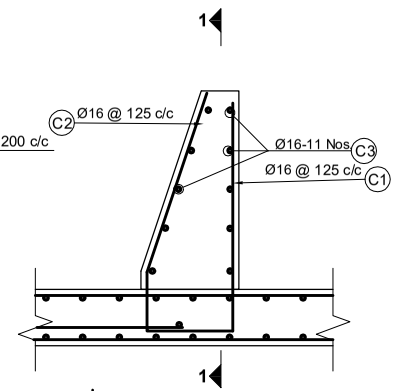

Crash Barrier Detail at The Tapered End
Scale:-1:20

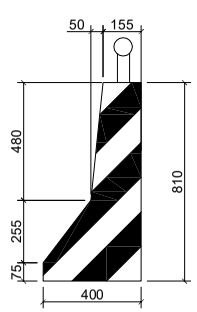

Painting Work on Crash Barrier
Scale:-1:20

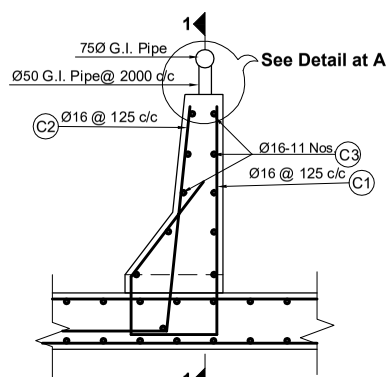

Crash Barrier Detail at The Bridge Deck
Scale:-1:20

NOTES:
The crash barrier shall be sloped at both ends of the bridge as shown and the reinforcement shall be adjusted according to the slope.

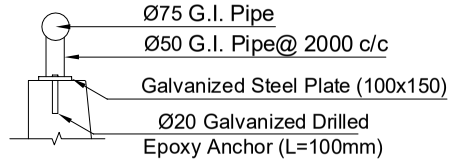

Details at- A-A
Scale:-1:20

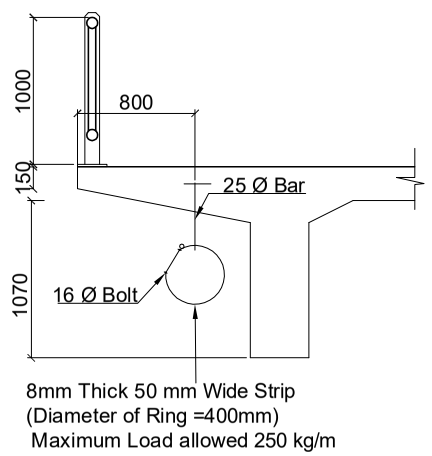

Utility hanger Detail
Scale:-1:50

BAR BENDING SCHEDULE OF CRASH BARRIER

BAR ID	SHAPE OF BAR IN mm (NOT TO SCALE)	SPACING (MM)	Ø OF BARS (mm)	NO. OF BARS	LENGTH (m)	WEIGHT/LENGTH (kG/m)	TOTAL WEIGHT (kG)
C1	575, 928, 225, 304	125	16	8	2.030	1.578	25.632
C2	915, 500	125	16	8	1.415	1.578	17.867
C3	9960		16	11	0.960	1.578	16.667
TOTAL FOR 1M							60.166
TOTAL FOR 1.0M IN MT							0.006

Government of Nepal Ministry of Physical Infrastructure and Transport **Department of Roads** **Project Directorate Office (ADB)** **SASEC Highway Improvement Project-** **Project Preparatory Consultant (SHIP-PPC)** **ADB Loan No: 3722-NEP**	**CONSULTANT:** Soosung Engineering Co. Ltd, Korea in association with ERMC P (Ltd) and TSC-Tech Studio of Engineeering Nepal	**IMPLEMENTING AGENCY:** **DOR, DCID** **ROAD NAME:** **East West Highway (H01)** **Butwal - Gorusinghe Section**	**SHEET TITLE:** Miscellaneous Details - 1 of Narsinga Dry Nala Bridge (46/H001/288_A,B)	**SCALE:** As Shown		**NAME**	**SIGNATURE**	**REV NO.**	**DESCRIPTION**	**DATE:** November , 2022
					Designed by:	Saroj Bhattarai				**DWG.NO.:** 288_Narsinga
					Checked by:	P. Upadhyaya				
					Approved by:	Dr. T.H.Choi				**SHEET NO.:** 15/19

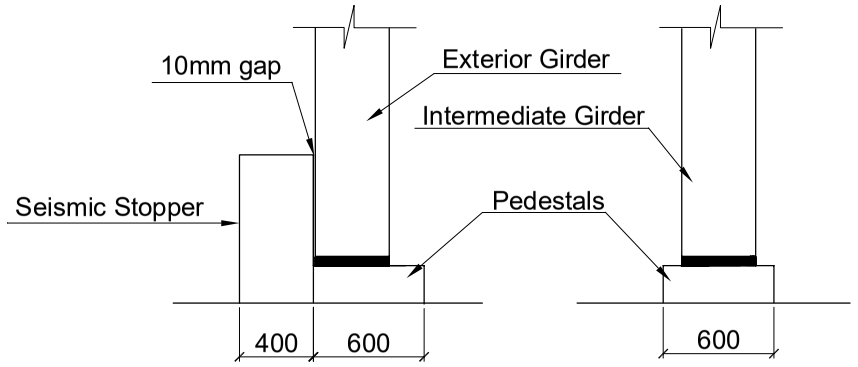

Abutment Cap With Stopper
Scale:-1:50

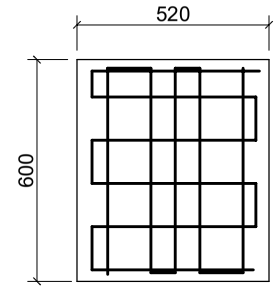

Pedestal Plan
Scale:-1:20

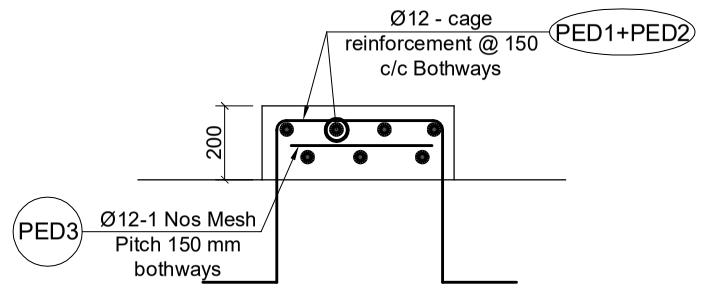

Pedestal Section
Scale:-1:20

BAR BENDING SCHEDULE OF PEDESTAL						
BAR ID	SHAPE OF BAR IN mm (NOT TO SCALE)	Ø OF BARS (mm)	NO. OF BARS	LENGTH (m)	WEIGHT/LENGTH (kG/m)	TOTAL WEIGHT (kG)
PED1	580, 520, 200	12	24	2.020	0.888	43.041
PED2	580, 440, 200	12	30	1.940	0.888	51.671
PED3	488, 430; Pitch 150 bothway, 1 layer	12	6	4.400	0.888	23.438
TOTAL BAR BENDING SCHEDULE OF PEDESTAL						118.151
TOTAL WEIGHT (IN METRIC TON)						0.118

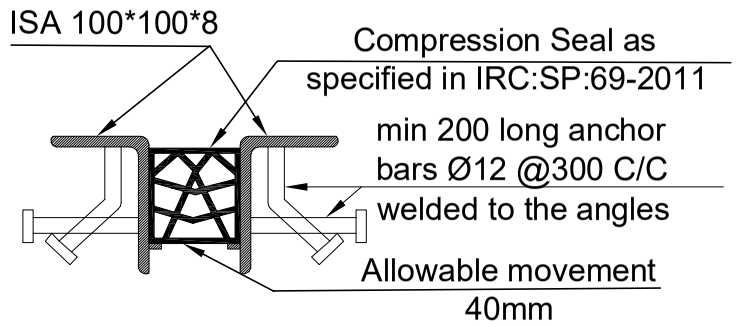

Compression seal type Expansion joints
Scale:-1:5

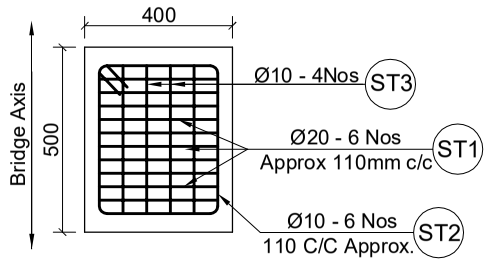

Stoppers Plan
Scale:-1:20

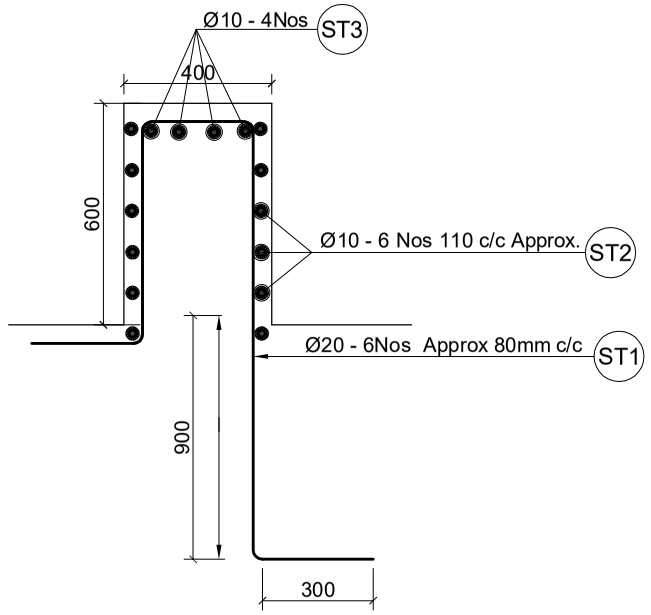

Stoppers Details
Scale:-1:20

BAR BENDING SCHEDULE OF STOPPER						
BAR ID	SHAPE OF BAR IN mm (NOT TO SCALE)	Ø OF BARS (mm)	NO. OF BARS	LENGTH (m)	WEIGHT/LENGTH (kG/m)	TOTAL WEIGHT (kG)
ST1	400, 600, 1500, 300, 300	20	6	3.000	2.466	44.391
ST2	420, 100, 400	10	6	1.640	0.617	6.067
ST3	400	10	4	0.616	0.617	1.519
TOTAL BAR BENDING SCHEDULE OF STOPPER						51.977
TOTAL WEIGHT (IN METRIC TON)						0.052

Notes on Elastomeric Bearings

The dimensions and properties of the bearings shown are tentative, based on IRC:83-2018, Part II, Table B2. The actual design shall be carried out by the manufacturer on the basis of provided load & deformation data. The effective stiffness shall not exceed the shown value.

Lateral stiffness corresponding to overall area and total thickness of elastomer = 2909 N/mm

NOTE:
To match the height of ballast wall, the pedestal thickness shall be suitably modified.

DESign Data For Bearing (Elastomeric Bearing)	All Loads Unfactored
Maximum permanent and superimposed dead loads	329.6 kN
Maximum load from surfacing (wearing course)	23.7 kN
Maximum live load reaction (including impact)	415.9 kN
Maximum horizontal seismic force	59 kN
Maximum braking force	88.6 kN
Total Maximum elongation of the deck	6 mm
Maximum Rotation due to dead load	0.0022 rad
Maximum rotation due to dead load + live load	0.0039 rad
Concrete for superstructure	M 30
Concrete for substructure	M25/M30
Width of girder at bearings	400 mm
Length of bearing along bridge axis (Assumed length)	320 mm

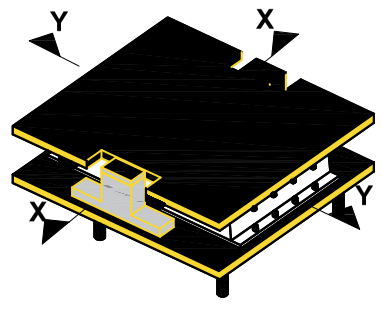

Elastrometric Bearing (partially free at longitudal direction Fixed at Transverse direction)

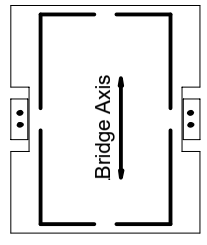

Elastomatric Bearing
Scale:-1:25

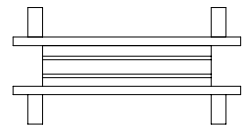

Section Y-Y
Scale:-1:25

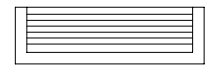

Section X-X
Scale:-1:25

Government of Nepal Ministry of Physical Infrastructure and Transport **Department of Roads** **Project Directorate Office (ADB)** **SASEC Highway Improvement Project-** **Project Preparatory Consultant (SHIP-PPC)** **ADB Loan No: 3722-NEP**	**CONSULTANT:**	**IMPLEMENTING AGENCY:**	**SHEET TITLE:**	**SCALE:**		**NAME**	**SIGNATURE**	**REV NO.**	**DESCRIPTION**	**DATE:**
	Soosung Engineering Co. Ltd, Korea in association with ERMC P (Ltd) and TTC-Tech Studio of Engineeering Nepal	**DOR, DCID**	Miscellaneous Details - 2 of Narsinga Dry Nala Bridge (46/H001/288_A,B)	As Shown	Designed by:	Saroj Bhattarai				November , 2022
		ROAD NAME: **East West Highway (H01)**			Checked by:	P. Upadhyaya				**DWG.NO.:** 288_Narsinga
		Butwal - Gorusinghe Section			Approved by:	Dr. T.H.Choi				**SHEET NO.:** 16/19

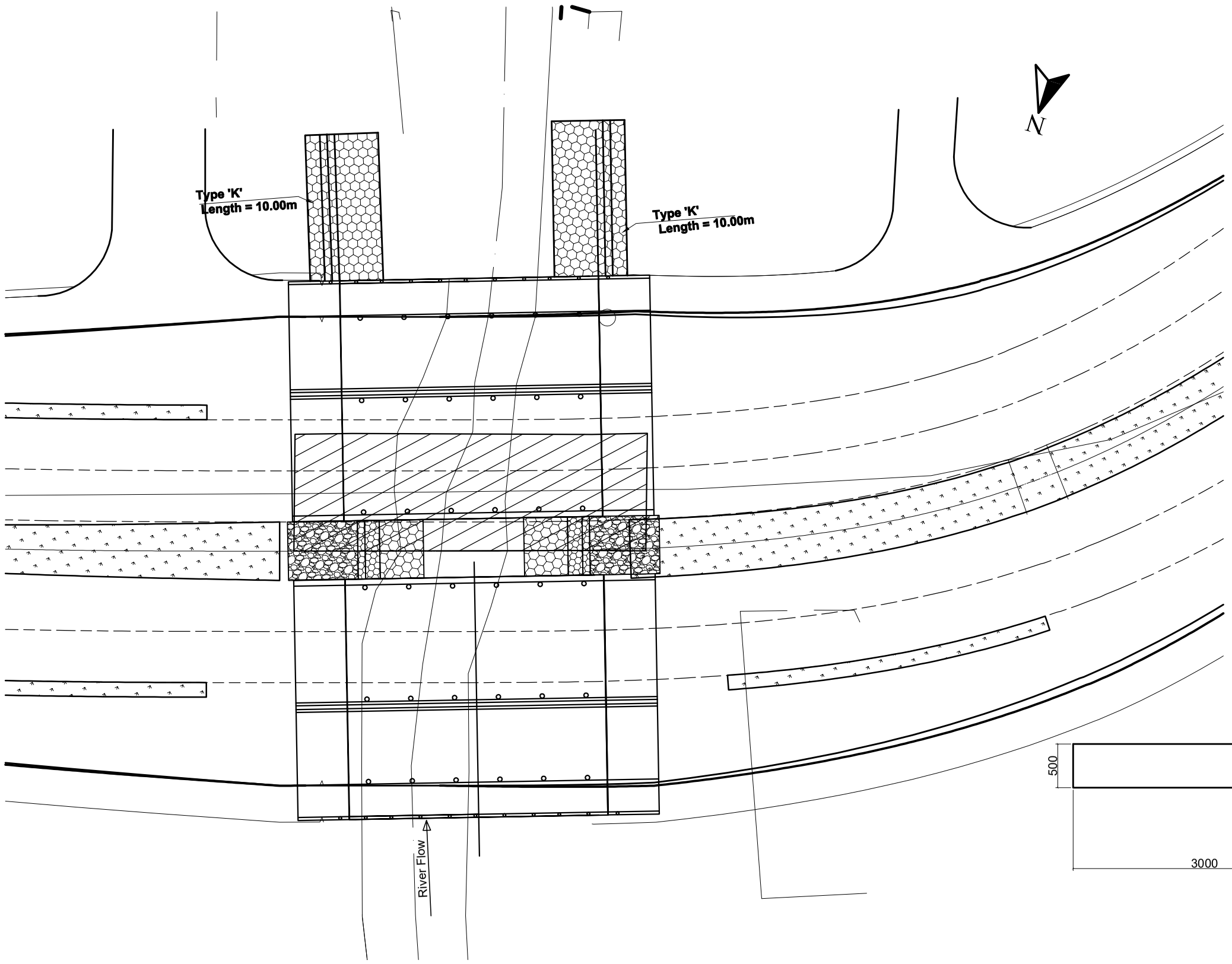

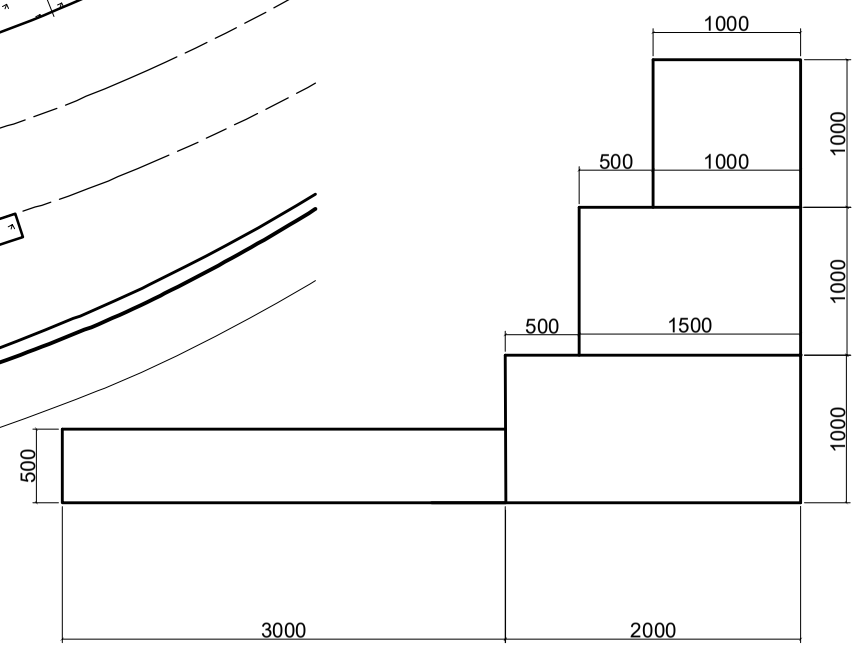

"K" Type River Training Structure
Scale:-1:50

Government of Nepal Ministry of Physical Infrastructure and Transport **Department of Roads** **Project Directorate Office (ADB)** **SASEC Highway Improvement Project-** **Project Preparatory Consultant (SHIP-PPC)** **ADB Loan No: 3722-NEP**	**CONSULTANT:** Soosung Engineering Co. Ltd, Korea in association with ERMC P (Ltd) and FIC-Tech Studio of Engineeering Nepal	**IMPLEMENTING AGENCY:** **DOR, DCID** **ROAD NAME:** **East West Highway (H01)** **Butwal - Gorusinghe Section**	**SHEET TITLE:** River Training Work of Narsinga Dry Nala Bridge (46/H001/288_A,B)	**SCALE:** As Shown		**NAME**	**SIGNATURE**	**REV NO.**	**DESCRIPTION**	**DATE:** November , 2022 **DWG.NO.:** 288_Narsinga **SHEET NO.:** 16.1/19
					Designed by:	Saroj Bhattarai				
					Checked by:	P. Upadhyaya				
					Approved by:	Dr. T.H.Choi				

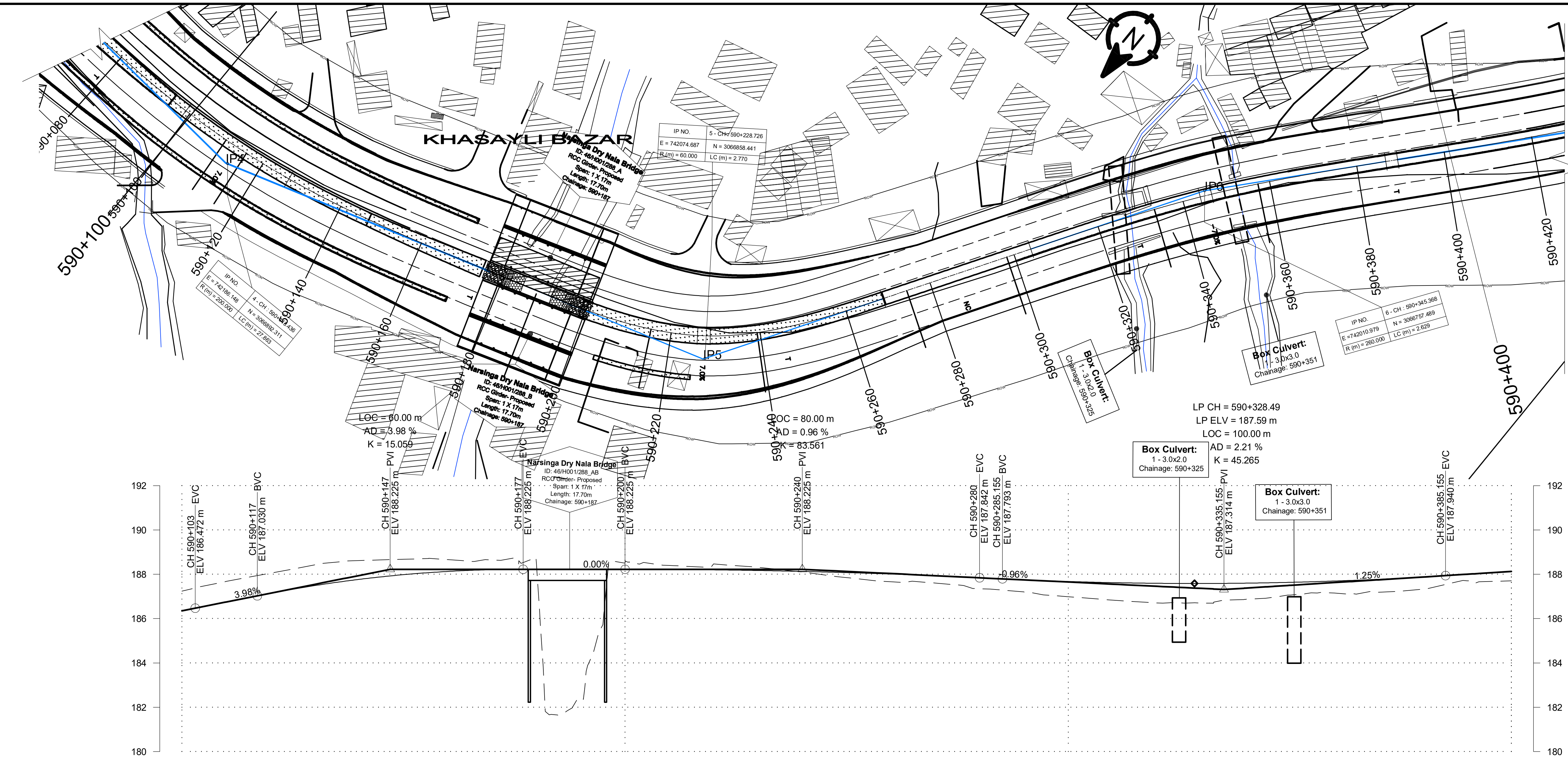

CHAINAGE(Km)	EXISTING LEVEL(m)	DESIGN LEVEL(m)
590+100	187.237	186.357
590+110	187.676	186.751
590+120	188.053	187.146
590+130	188.423	187.492
590+140	188.618	187.770
590+150	188.678	187.983
590+160	188.661	188.129
590+170	188.646	188.209
590+180	188.464	188.225
590+190	182.422	188.225
590+200	188.531	188.225
590+210	188.398	188.219
590+220	188.465	188.201
590+230	188.316	188.171
590+240	188.104	188.129
590+250	187.852	188.075
590+260	187.661	188.010
590+270	187.603	187.932
590+280	187.349	187.842
590+290	187.202	187.749
590+300	186.988	187.675
590+310	186.834	187.623
590+320	186.710	187.593
590+330	186.700	187.586
590+340	186.871	187.600
590+350	187.060	187.636
590+360	187.151	187.695
590+370	187.191	187.776
590+380	187.328	187.878
590+390	187.709	188.001
590+400	187.701	188.126

HORIZONTAL ALIGNMENT (RIGHT / LEFT): IP-4 R=200.00; IP-5 R=60.00; IP-6 R=260.00; IP-7 R=480.00

SUPER ELEVATION: 590+100; T; 590+110.099; 7; 590+115.569; T; 590+215.412; 7; 590+239.309; T; 590+274.459; NC; 590+298.27; T; 590+333.28; -7; 590+357.318; T; 590+400

Government of Nepal Ministry of Physical Infrastructure and Transport **Department of Roads** **Project Directorate Office (ADB)** **SASEC Highway Improvement Project-** **Project Preparatory Consultant (SHIP-PPC)** **ADB Loan No: 3722-NEP**	**CONSULTANT:** Soosung Engineering Co. Ltd, Korea in association with ERMC P (Ltd), Nepal and TSE-Tech Studio of Engineeering	**ROAD NAME:** **DOR, DCID** **ROAD NAME:** **East West Highway (H01)** **Butwal - Gorusinghe Section**	**SHEET TITLE:** Plan & Profile of Narsinga Drynala Bridge CH:590+100 - CH:590+400	**SCALE:** 0 2 4 6m Vertical Scale 0 10 20 30m Horizontal Scale	**DATE:** November , 2022 **DWG.NO.:** 388_Narsinga **SHEET NO.:** 17/19

	NAME	SIGNATURE	REV NO.	DESCRIPTION
DESIGNED BY:	S.B. Shrestha			
CHECKED BY:	P. Upadhyaya			
APPROVED BY:	Dr. T.H.Choi			

Ch:590+000
GL:185.672
DL:185.743

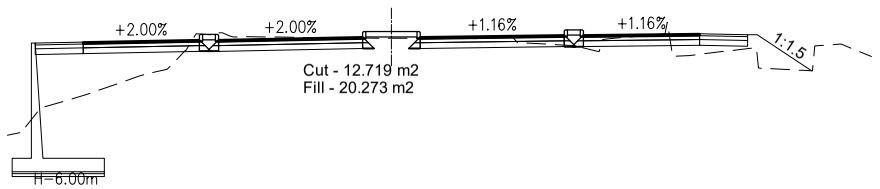

Ch:590+010
GL:185.834
DL:185.705

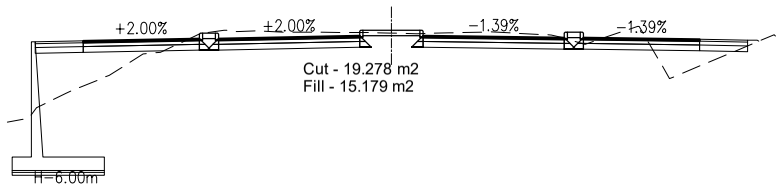

Ch:590+020
GL:185.890
DL:185.683

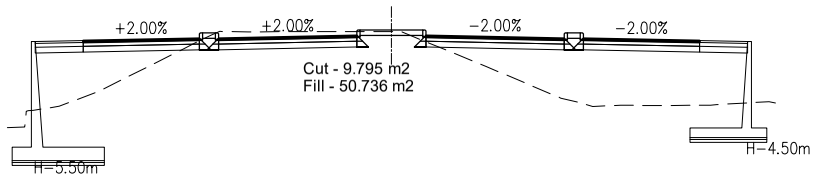

Ch:590+030
GL:185.827
DL:185.675

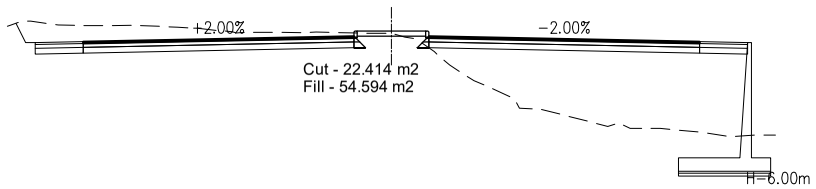

Ch:590+040
GL:179.717
DL:185.675

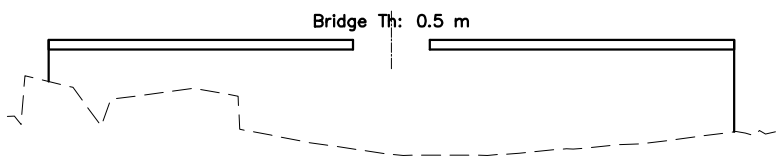

Ch:590+050
GL:180.099
DL:185.675

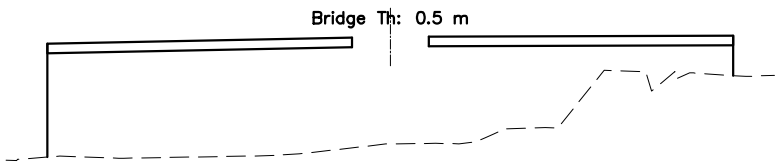

Ch:590+060
GL:184.702
DL:185.675

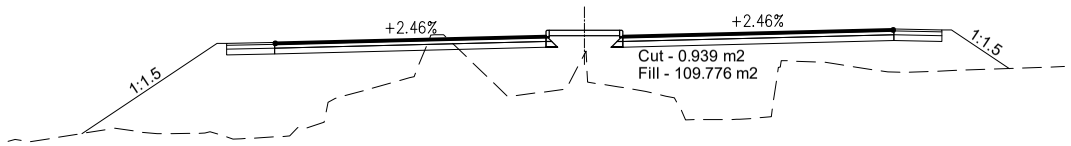

Ch:590+070
GL:186.046
DL:185.699

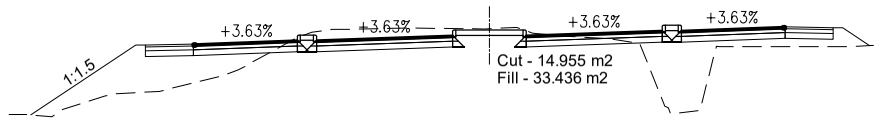

Ch:590+080
GL:186.406
DL:185.819

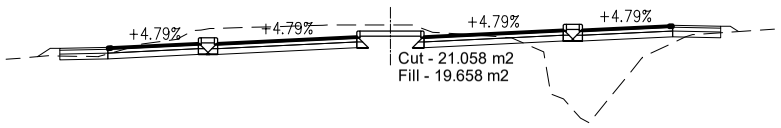

Ch:590+090
GL:186.773
DL:186.038

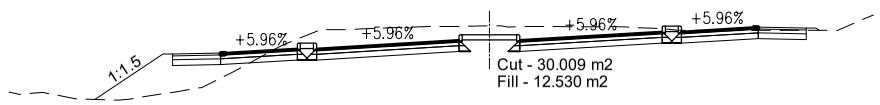

Ch:590+100
GL:187.237
DL:186.357

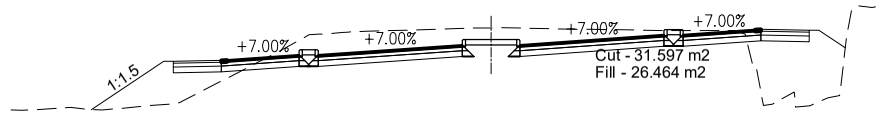

Ch:590+110
GL:187.676
DL:186.751

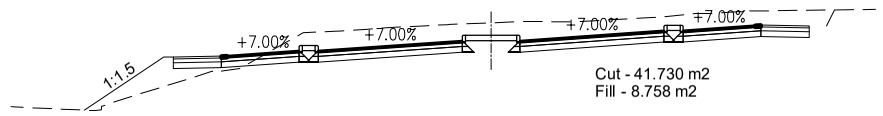

Ch:590+120
GL:188.053
DL:187.146

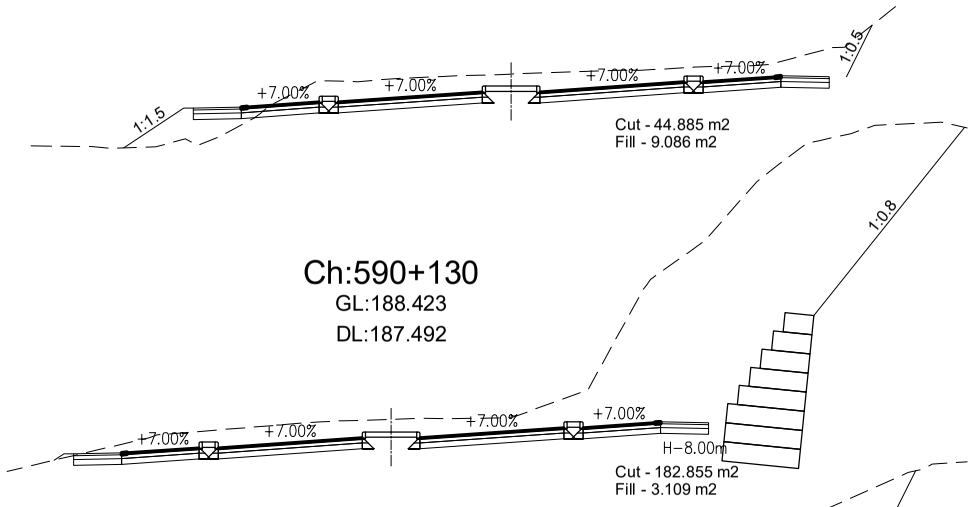

Ch:590+130
GL:188.423
DL:187.492

Ch:590+140
GL:188.618
DL:187.770

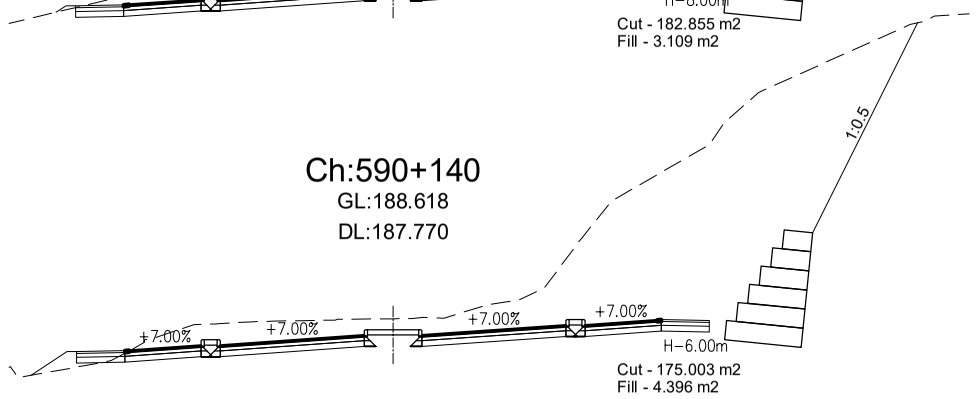

Government of Nepal Ministry of Physical Infrastructure and Transport **Department of Roads** **Project Directorate Office (ADB)** **SASEC Highway Improvement Project-** **Project Preparatory Consultant (SHIP-PPC)** **ADB Loan No: 3722-NEP**	**CONSULTANT:** Soosung Engineering Co. Ltd, Korea in association with ERMC P (Ltd), Nepal and TSE-Tech Studio of Engineeering	**ROAD NAME:** **DOR, DCID** **ROAD NAME:** **East West Highway (H01)** **Butwal - Gorusinghe Section**	**SHEET TITLE:** Cross Section of Ch:590+000 - 590+140	**SCALE:** 0 2 4 6m Vertical Scale 0 10 20 30m Horizontal Scale		**NAME**	**SIGNATURE**	**REV NO.**	**DESCRIPTION**
					DESIGNED BY:	S.B. Shrestha			
					CHECKED BY:	P. Upadhyaya			
					APPROVED BY:	Dr. T.H.Choi			

DATE: November , 2022

DWG.NO.: 388_Narsinga

SHEET NO.: 17.1/19

Ch:590+150
GL:188.678
DL:187.983

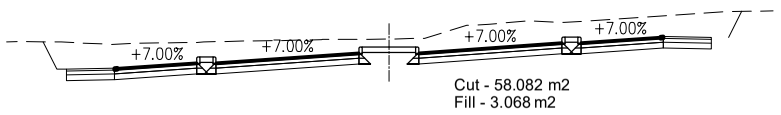

Ch:590+160
GL:188.661
DL:188.129

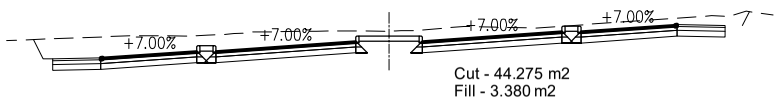

Ch:590+170
GL:188.646
DL:188.209

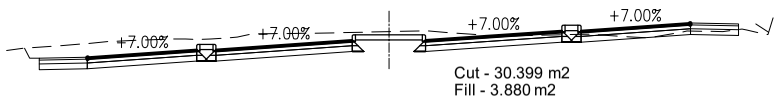

Ch:590+180
GL:188.464
DL:188.225

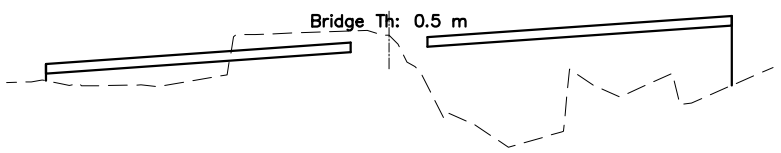

Ch:590+190
GL:182.422
DL:188.225

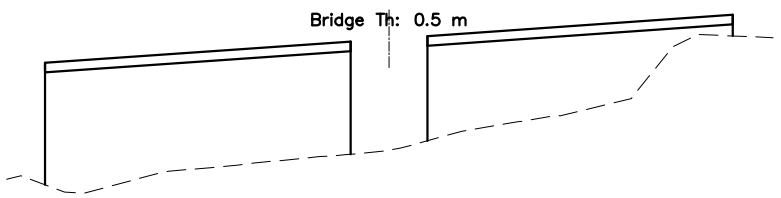

Ch:590+200
GL:188.531
DL:188.225

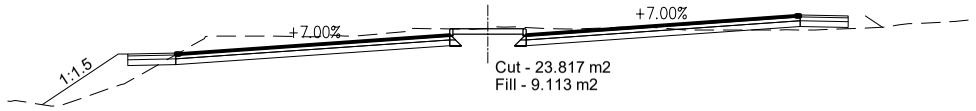

Ch:590+210
GL:188.398
DL:188.219

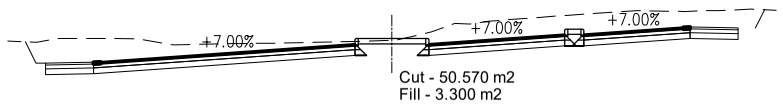

Ch:590+220
GL:188.465
DL:188.201

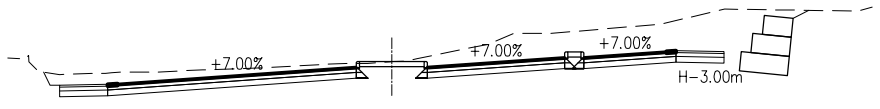

Ch:590+230
GL:188.316
DL:188.171

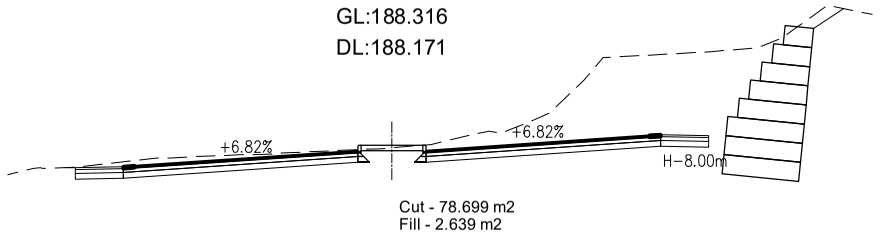

Ch:590+240
GL:188.104
DL:188.129

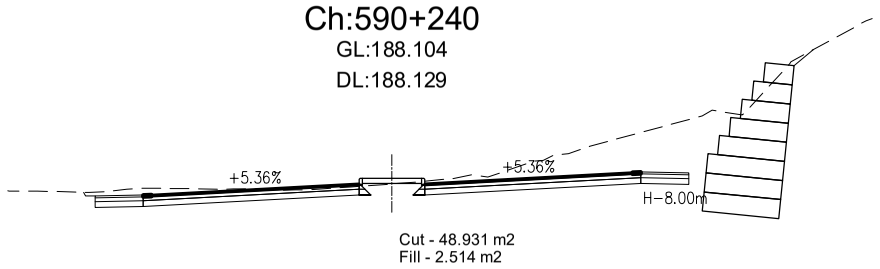

Ch:590+250
GL:187.852
DL:188.075

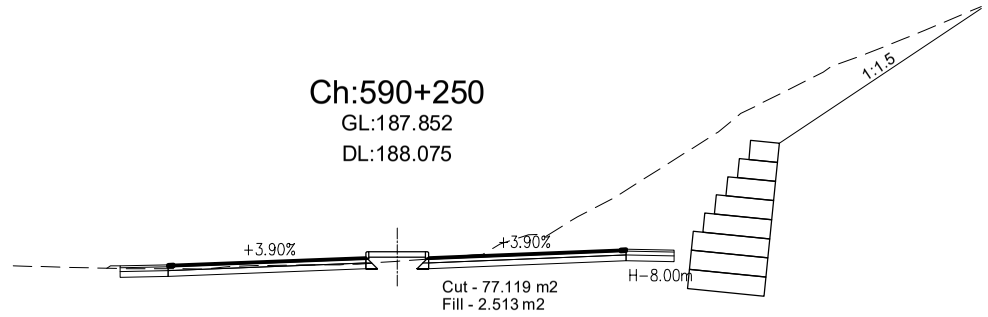

Ch:590+260
GL:187.661
DL:188.010

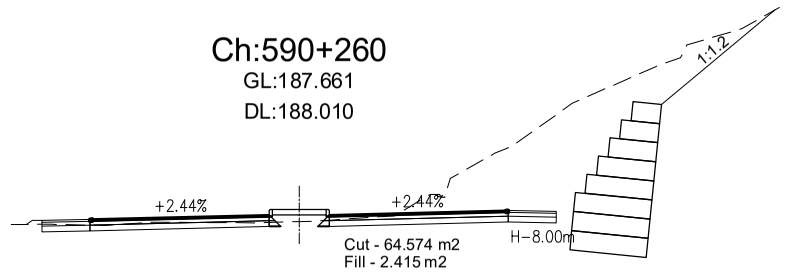

Ch:590+270
GL:187.603
DL:187.932

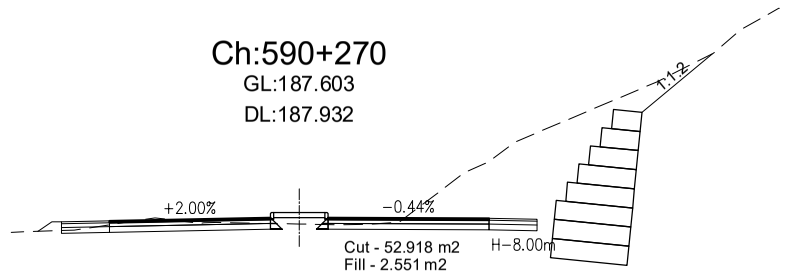

Ch:590+280
GL:187.349
DL:187.842

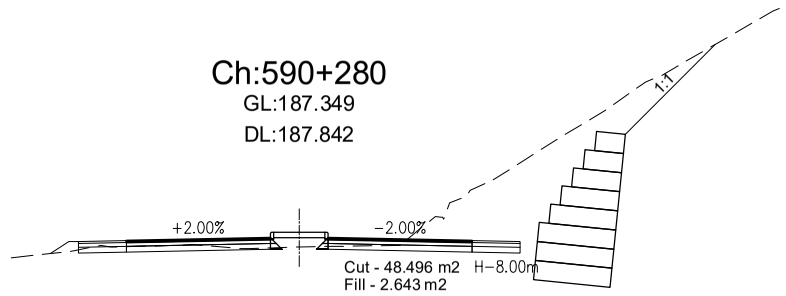

Ch:590+290
GL:187.202
DL:187.749

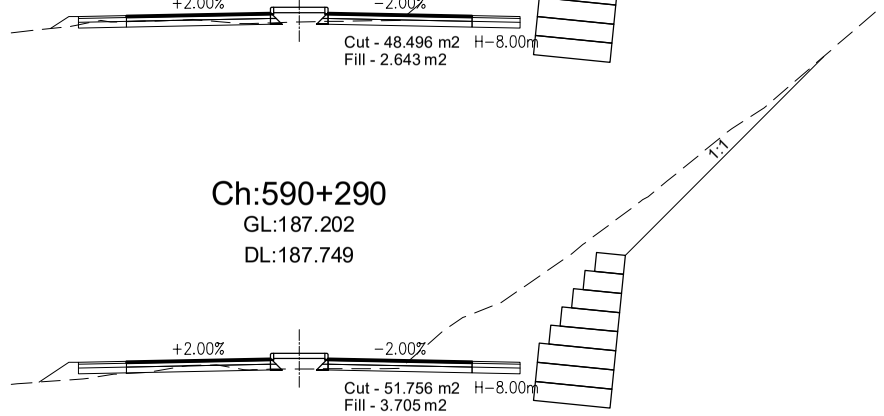

Government of Nepal Ministry of Physical Infrastructure and Transport **Department of Roads** **Project Directorate Office (ADB)** **SASEC Highway Improvement Project-** **Project Preparatory Consultant (SHIP-PPC)** **ADB Loan No: 3722-NEP**	**CONSULTANT:** Soosung Engineering Co. Ltd, Korea in association with ERMC P (Ltd), Nepal and TSE-Tech Studio of Engineeering	**ROAD NAME:** **DOR, DCID** **ROAD NAME:** **East West Highway (H01)** **Butwal - Gorusinghe Section**	**SHEET TITLE:** Cross Section of Ch:590+150 - 590+290	**SCALE:** 0 2 4 6m Vertical Scale 0 10 20 30m Horizontal Scale		**NAME**	**SIGNATURE**	**REV NO.**	**DESCRIPTION**	**DATE:** November , 2022 **DWG.NO.:** 388_Narsinga **SHEET NO.:** 17.2/19
					DESIGNED BY:	S.B. Shrestha				
					CHECKED BY:	P. Upadhyaya				
					APPROVED BY:	Dr. T.H.Choi				

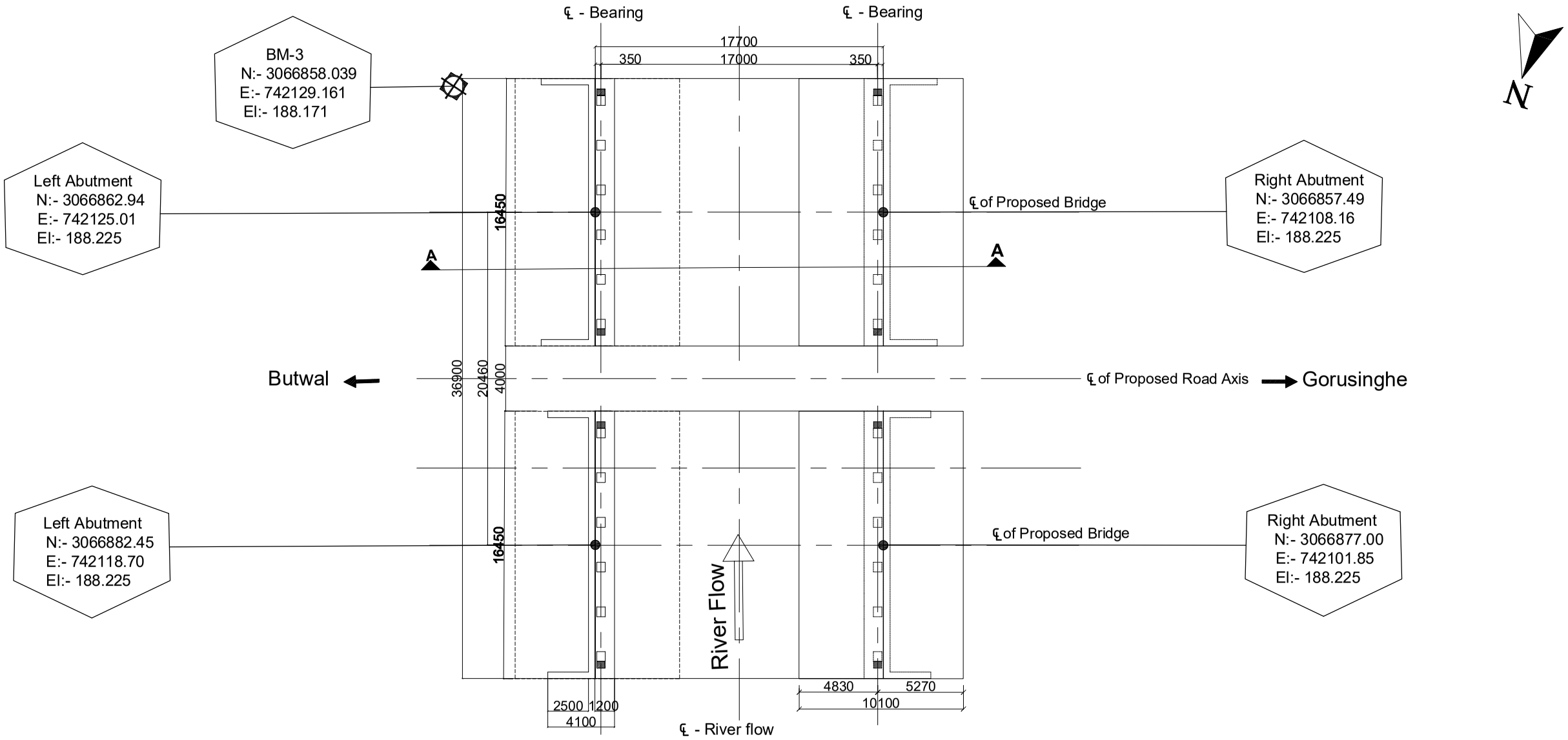

Layout Plan
Scale:-1:300

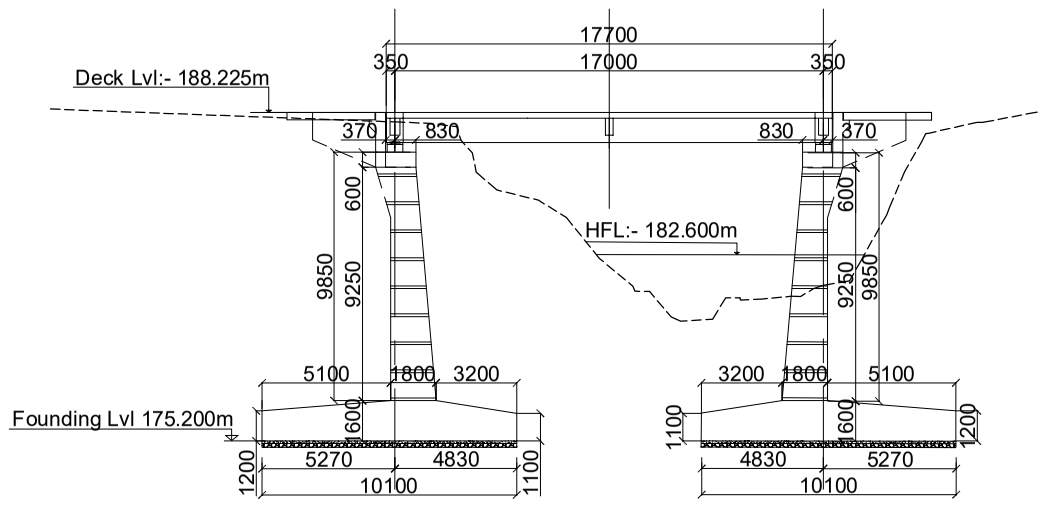

Section at A-A
Scale:-1:300

Government of Nepal Ministry of Physical Infrastructure and Transport **Department of Roads** **Project Directorate Office (ADB)** **SASEC Highway Improvement Project-** **Project Preparatory Consultant (SHIP-PPC)** **ADB Loan No: 3722-NEP**	**CONSULTANT:** Soosung Engineering Co. Ltd, Korea in association with ERMC P (Ltd) and TTE-Tech Studio of Engineeering Nepal	**IMPLEMENTING AGENCY:** **DOR, DCID** **ROAD NAME:** **East West Highway (H01)** **Butwal - Gorusinghe Section**	**SHEET TITLE:** PLayout Plan of **Narsinga Dry Nala Bridge** (46/H001/288_A,B)	**SCALE:** As Shown		**NAME**	**SIGNATURE**	**REV NO.**	**DESCRIPTION**	**DATE:** November , 2022 **DWG.NO.:** 388_Narsinga **SHEET NO.:** 18/19
					Designed by:	Saroj Bhattarai				
					Checked by:	P. Upadhyaya				
					Approved by:	Dr. T.H.Choi				

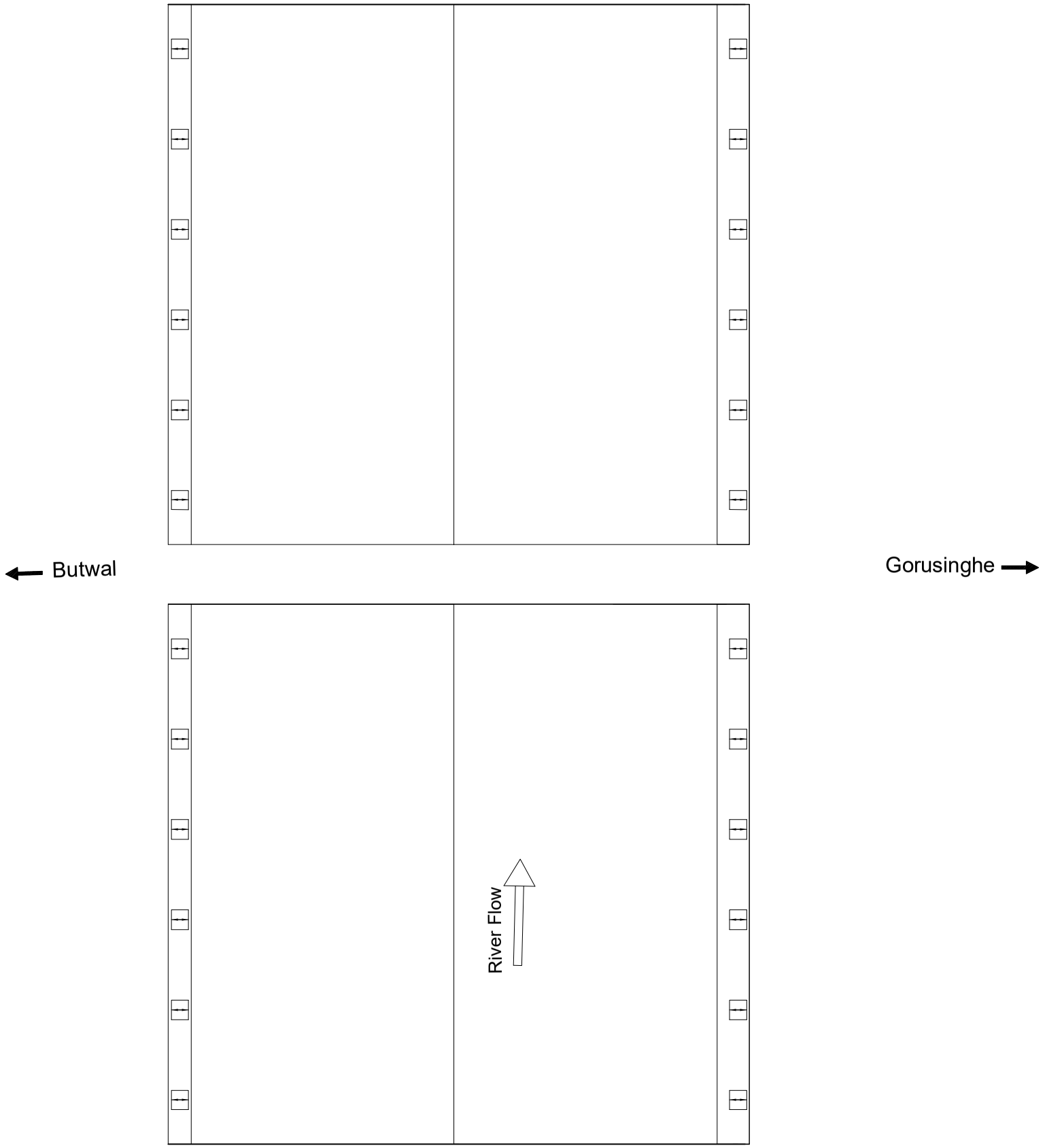

Layout of Bearing
Scale:-1:150

Legend

Elastomeric bearing.
Partial movement allowed in longitudinal direction.
Restrained to transverse movement.Free to rotate in any direction.

Fixed Pot-bearing.
Restrainde to lateral movement,Free to rotate in aney direction.

Free Pot-bearing.
Partial movement allowed in longitudinal direction.
Restrained to transverse movement.Free to rotate in any direction.

Government of Nepal Ministry of Physical Infrastructure and Transport **Department of Roads** **Project Directorate Office (ADB)** **SASEC Highway Improvement Project-** **Project Preparatory Consultant (SHIP-PPC)** **ADB Loan No: 3722-NEP**	**CONSULTANT:** Soosung Engineering Co. Ltd, Korea in association with ERMC P (Ltd) and TE-Tech Studio of Engineeering Nepal	**IMPLEMENTING AGENCY:** **DOR, DCID** **ROAD NAME:** **East West Highway (H01)** **Butwal - Gorusinghe Section**	**SHEET TITLE:** PLayout Plan of **Narsinga Dry Nala Bridge** (46/H001/288_A,B)	**SCALE:** As Shown		**NAME**	**SIGNATURE**	**REV NO.**	**DESCRIPTION**	**DATE:** November , 2022 **DWG.NO.:** 388_Narsinga **SHEET NO.:** 19/19
					Designed by:	Saroj Bhattarai				
					Checked by:	P. Upadhyaya				
					Approved by:	Dr. T.H.Choi				

Government of Nepal

Ministry of Physical Infrastructure and Transport

Department of Roads

Project Directorate (ADB)

Implementing Agency : DOR, DCID

Project Preparatory Consultants

Under

SASEC Highway Improvement Project (SHIP-PPC)

(ADB Loan No: 3722 Nep)

Contract No. SHIP/PPC/2020/02

Dry Nala Bridge(46-H001-289_AB)

St. Ch : 590+693.15 ~ End Ch : 590+704.85

Detailed Drawing

Butwal - Gorusinghe Sector

November,2022

CONTENTS

S.No.	DESCRIPTION	DWG. NO	NO. OF SHEETS
1.	General Notes.	1	1
2.	General Arrangement.	2	1
3.	Concrete Outline.	3	1
4.	Reinforcement Details.	4	1
5.	Typical Drawing of Wing Wall.	5	1
6.	Bar Bending Schedule.	6	1
7.	Layout Plan.	7	1
8.	Plan & Profile.	8-9	2

GENERAL NOTES

a) Bridge Design Specifications

IRC Standard Specifications and Code of Practice for Road Bridges - All Relevant Sections.

b) Bridge Design Method

Limit State method.

c) Live Load

IRC Class A and IRC Class 70R, Tracked and Wheeled vehicles. Load combinations are adopted as per IRC:6-2017, Section: II, Loads and Load Combinations.

Pedestrian Load: 4kN/m².

d) Concrete

Concrete Class for box, Approach Slab and Safety Kerb is M25.

e) Steel Reinforcement

Reinforcing Steel shall be HYSD bars of grade Fe 500 confirming to IS: 1786-2008.

f) Lap Length

Minimum Lap Length is 65xdiameter of steel reinforcement.

Laps shall be in staggered position.

Lapped bars more tha 50% shall not be allowed.

g) Clear covers

Top Slab

The clear cover to steel reinforcement is 40mm.

Side Wall and Base Slab

The clear cover to steel reinforcement steel is 75mm.

Approach Slab

The clear cover to steel reinforcement steel is 40mm.

Safety Kerb

The clear cover to steel reinforcement steel is 25mm.

h) All dimensions are in millimeters except otherwise mentioned.

Government of Nepal Ministry of Physical Infrastructure and Transport **Department of Roads** **Project Directorate Office (ADB)** **SASEC Highway Improvement Project-** **Project Preparatory Consultant (SHIP-PPC)** **ADB Loan No: 3722-NEP**	**CONSULTANT:** Soosung Engineering Co. Ltd, Korea in association with ERMC P (Ltd) and TTC-Tech Studio of Engineeering Nepal	**IMPLEMENTING AGENCY:** **DOR, DCID** **ROAD NAME:** **East West Highway (H01)** **Butwal - Gorusinghe Section**	**SHEET TITLE:** General Notes of **Dry Nala Box Bridge (5x8.5)** (46/H001/289_A,B) CH-590+695	**SCALE:** As Shown		**NAME**	**SIGNATURE**	**REV NO.**	**DESCRIPTION**	**DATE:** Nov,2022
					Designed by:	P.Shrestha				**DWG.NO.:** 289_Dry Nala
					Checked by:	P. Upadhyaya				
					Approved by:	Dr. T.H.Choi				**SHEET NO.:** 01/09

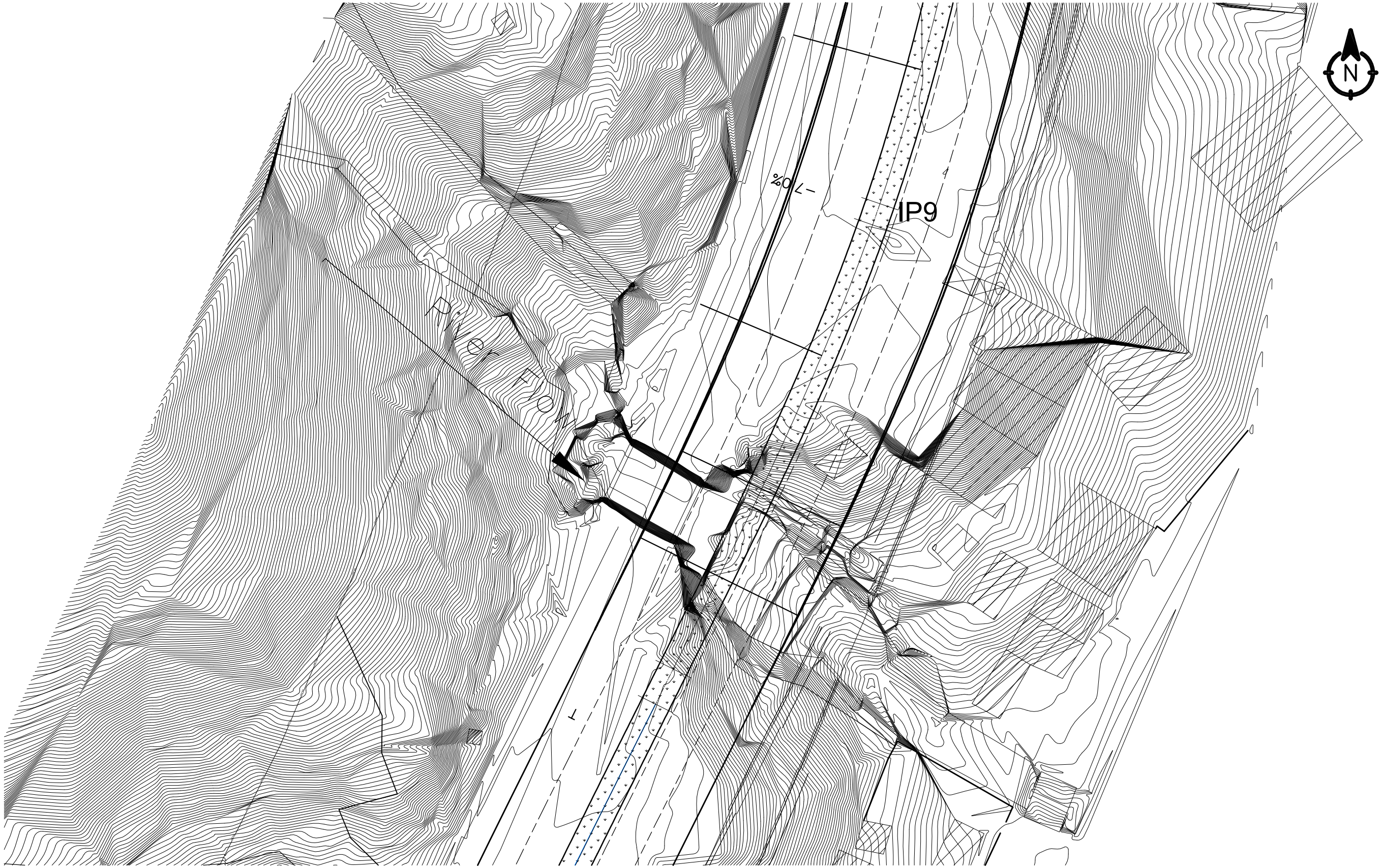

Government of Nepal Ministry of Physical Infrastructure and Transport **Department of Roads** **Project Directorate Office (ADB)** **SASEC Highway Improvement Project-** **Project Preparatory Consultant (SHIP-PPC)** **ADB Loan No: 3722-NEP**	**CONSULTANT:** Soosung Engineering Co. Ltd, Korea in association with ERMC P (Ltd) and FIC-Tech Studio of Engineeering Nepal	**IMPLEMENTING AGENCY:** **DOR, DCID** **ROAD NAME:** **East West Highway (H01)** **Butwal - Gorusinghe Section**	**SHEET TITLE:** Topographic Map of **Dry Nala Box Bridge (5x8.5)** (46/H001/289_A,B) CH-590+695	**SCALE:** 2:1		**NAME**	**SIGNATURE**	**REV NO.**	**DESCRIPTION**	**DATE:** Nov,2022 **DWG.NO.:** 289_Dry Nala **SHEET NO.:** 02/09
					Designed by:	P.Shrestha				
					Checked by:	P. Upadhyaya				
					Approved by:	Dr. T.H.Choi				

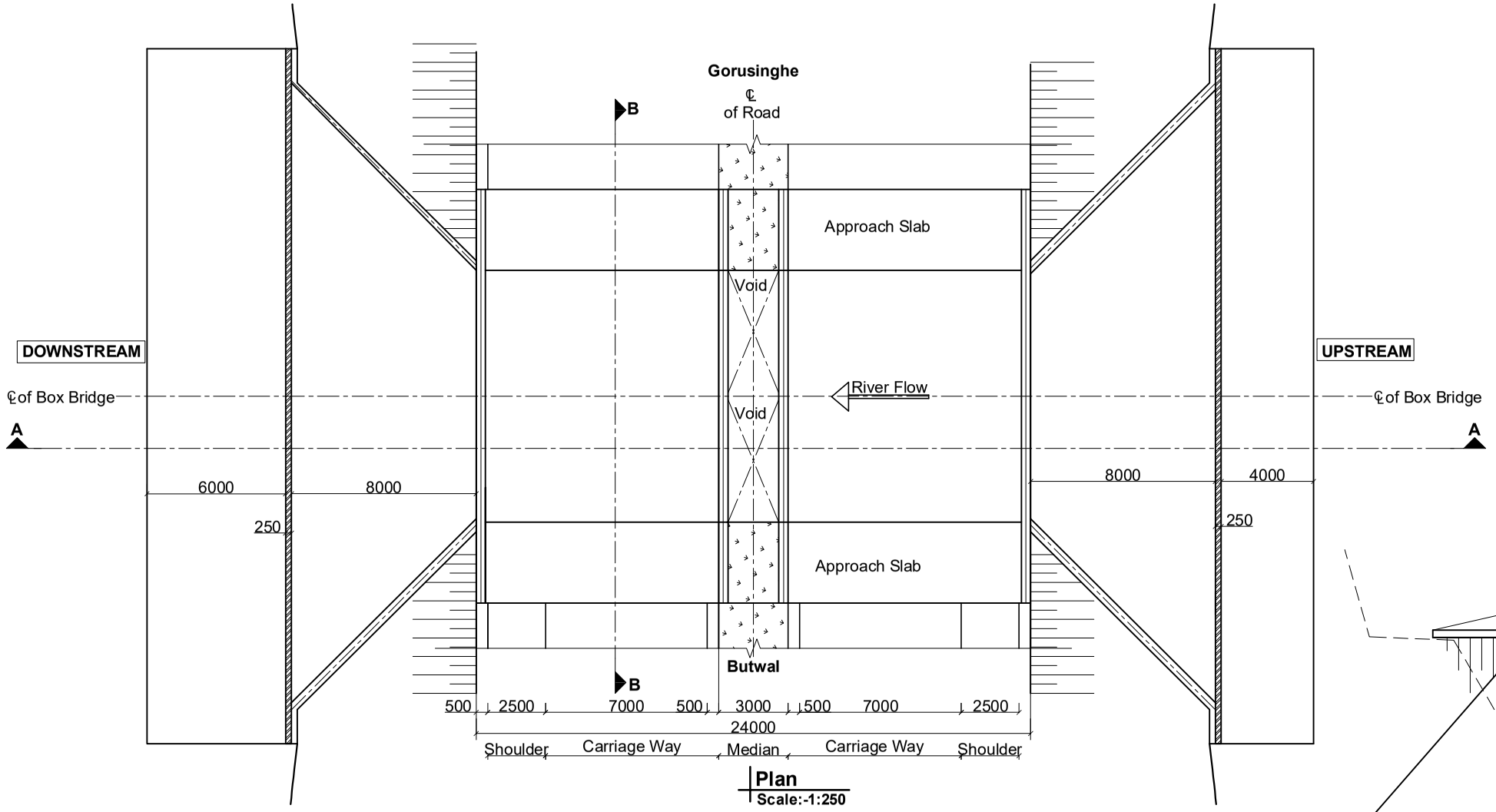

Plan
Scale:-1:250

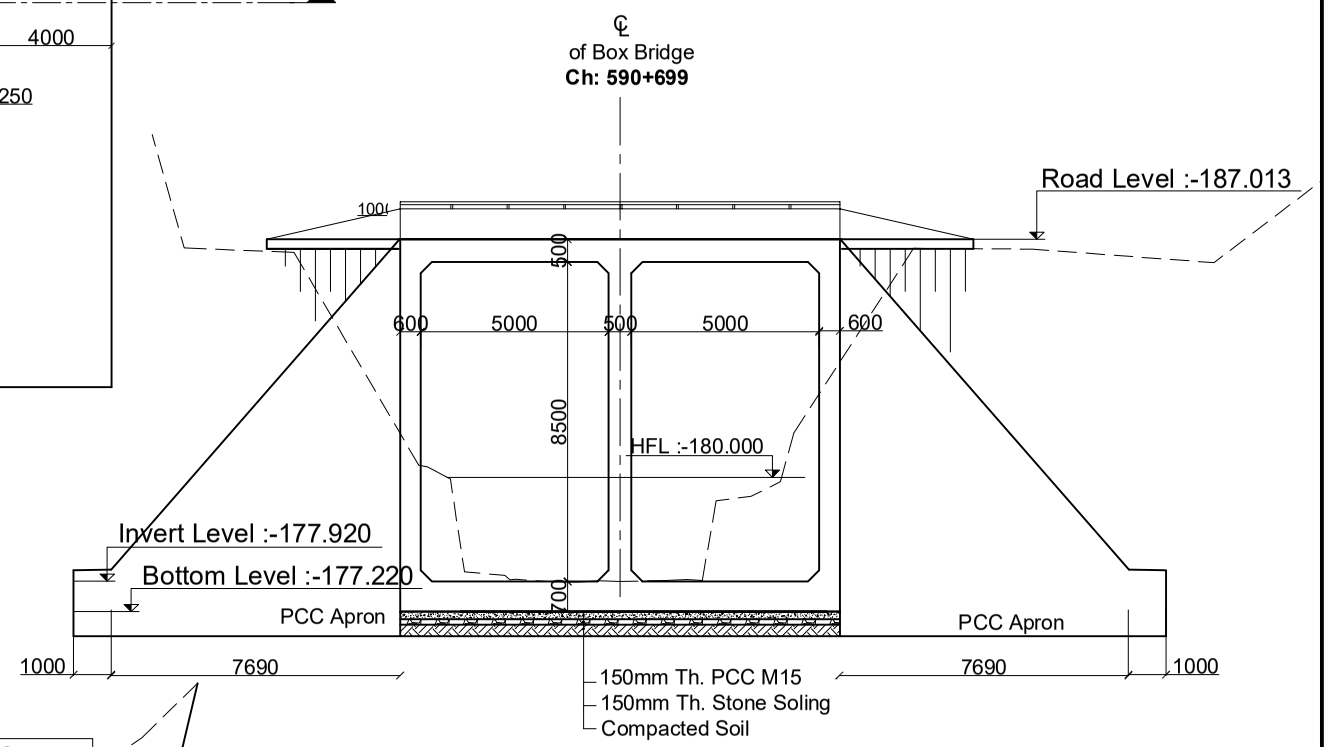

Section at B-B
Scale: 1:200

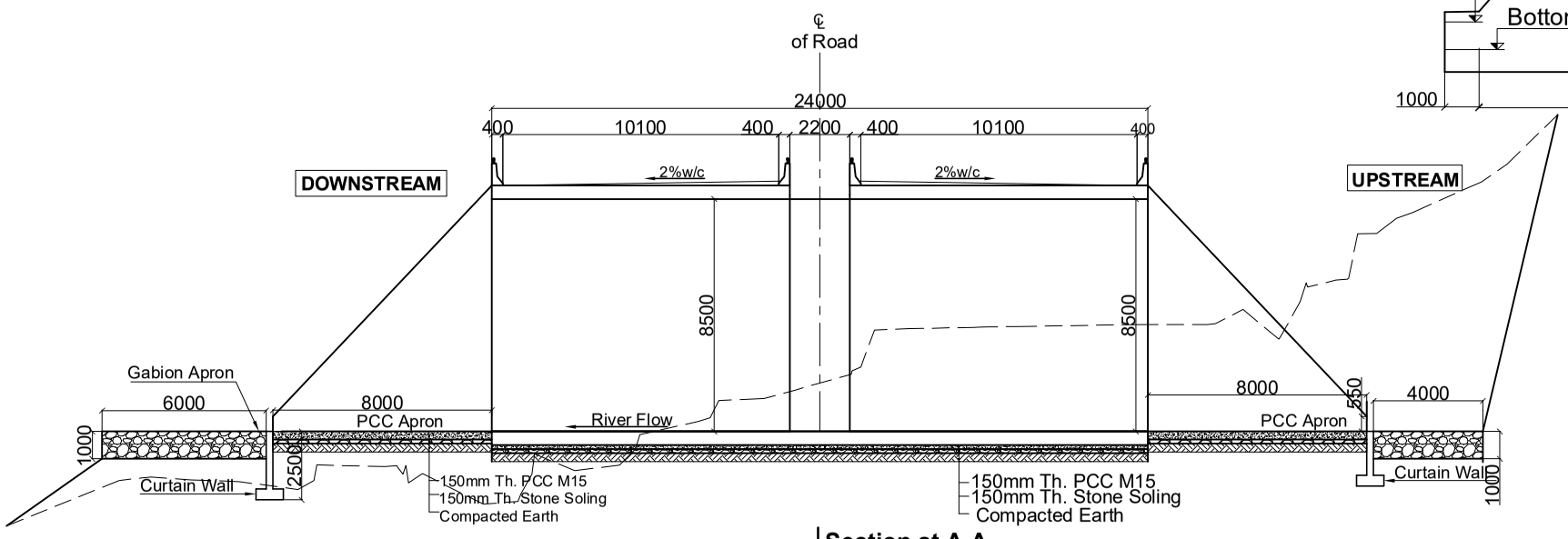

Section at A-A
Scale:-1:250

	Name(NMC Number)	Signature
P. Engineer	P. Upadhyaya (Civil A 675)	
Structure Engineer	K.P.Wagle(Civil A 127) / P.Shrestha(Civil A 676) / S.Bhattarai (Civil A 904)	
Hydrologist	Dr. P.C. Jha(Civil A 166) / S. Adhikari (Civil A 408)	
Geotechnical Engineer	A. Adhikari(ka 199) / Dr. V . R. S. Shahi	

Government of Nepal Ministry of Physical Infrastructure and Transport **Department of Roads** **Project Directorate Office (ADB)** **SASEC Highway Improvement Project-** **Project Preparatory Consultant (SHIP-PPC)** **ADB Loan No: 3722-NEP**	**CONSULTANT:** Soosung Engineering Co. Ltd, Korea in association with ERMC P (Ltd) and TSE-Tech Studio of Engineeering Nepal	**IMPLEMENTING AGENCY:** **DOR, DCID** **ROAD NAME:** **East West Highway (H01)** **Butwal - Gorusinghe Section**	**SHEET TITLE:** General Arrangement of **Dry Nala Box Bridge (5x8.5)** (46/H001/289_A,B) CH-590+695	**SCALE:** As Shown		**NAME**	**SIGNATURE**	**REV NO.**	**DESCRIPTION**	**DATE:** Nov,2022
					Designed by:	P.Shrestha				**DWG.NO.:** 289_Dry Nala
					Checked by:	P. Upadhyaya				
					Approved by:	Dr. T.H.Choi				**SHEET NO.:** 03/09

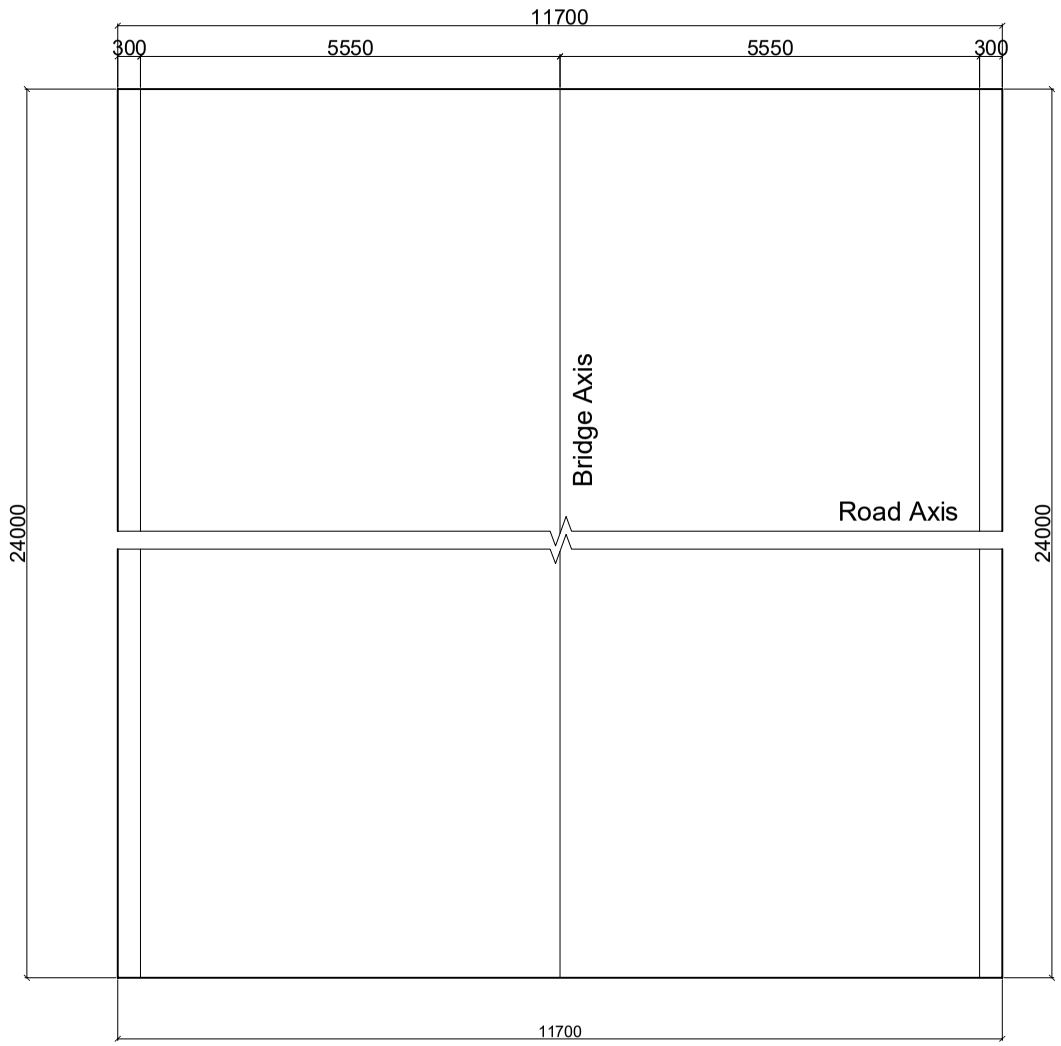

Concrete Outlines (Plan)
Scale:-1:100

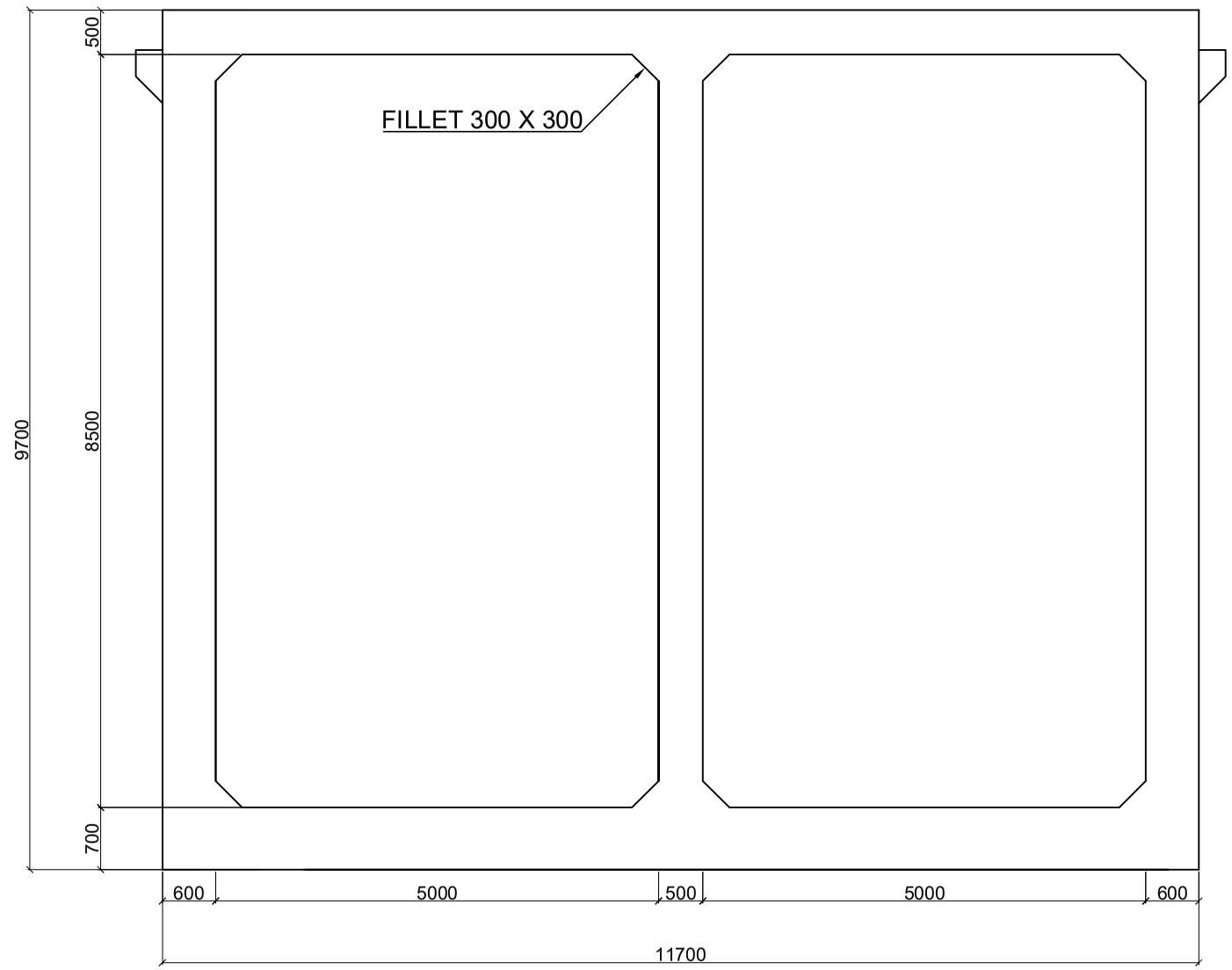

Concrete Outlines (Sectional Elevation)
Scale:-1:75

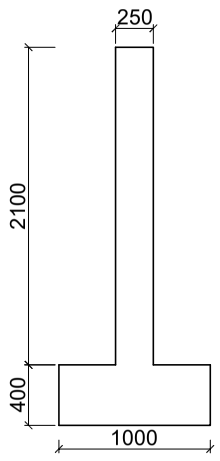

Curtain Wall D/S
Scale:-1:50

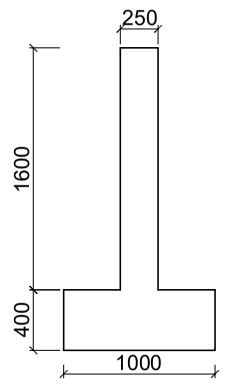

Curtain Wall U/S
Scale:-1:50

Government of Nepal Ministry of Physical Infrastructure and Transport **Department of Roads** **Project Directorate Office (ADB)** **SASEC Highway Improvement Project-** **Project Preparatory Consultant (SHIP-PPC)** **ADB Loan No: 3722-NEP**	**CONSULTANT:** Soosung Engineering Co. Ltd, Korea in association with ERMC P (Ltd) and TSE-Tech Studio of Engineeering Nepal	**IMPLEMENTING AGENCY:** **DOR, DCID** **ROAD NAME:** **East West Highway (H01)** **Butwal - Gorusinghe Section**	**SHEET TITLE:** Concrete Outline of **Dry Nala Box Bridge (5x8.5)** (46/H001/289_A,B) CH-590+695	**SCALE:** As Shown		**NAME**	**SIGNATURE**	**REV NO.**	**DESCRIPTION**	**DATE:** Nov,2022 **DWG.NO.:** 289_Dry Nala **SHEET NO.:** 04/09
					Designed by:	P.Shrestha				
					Checked by:	P. Upadhyaya				
					Approved by:	Dr. T.H.Choi				

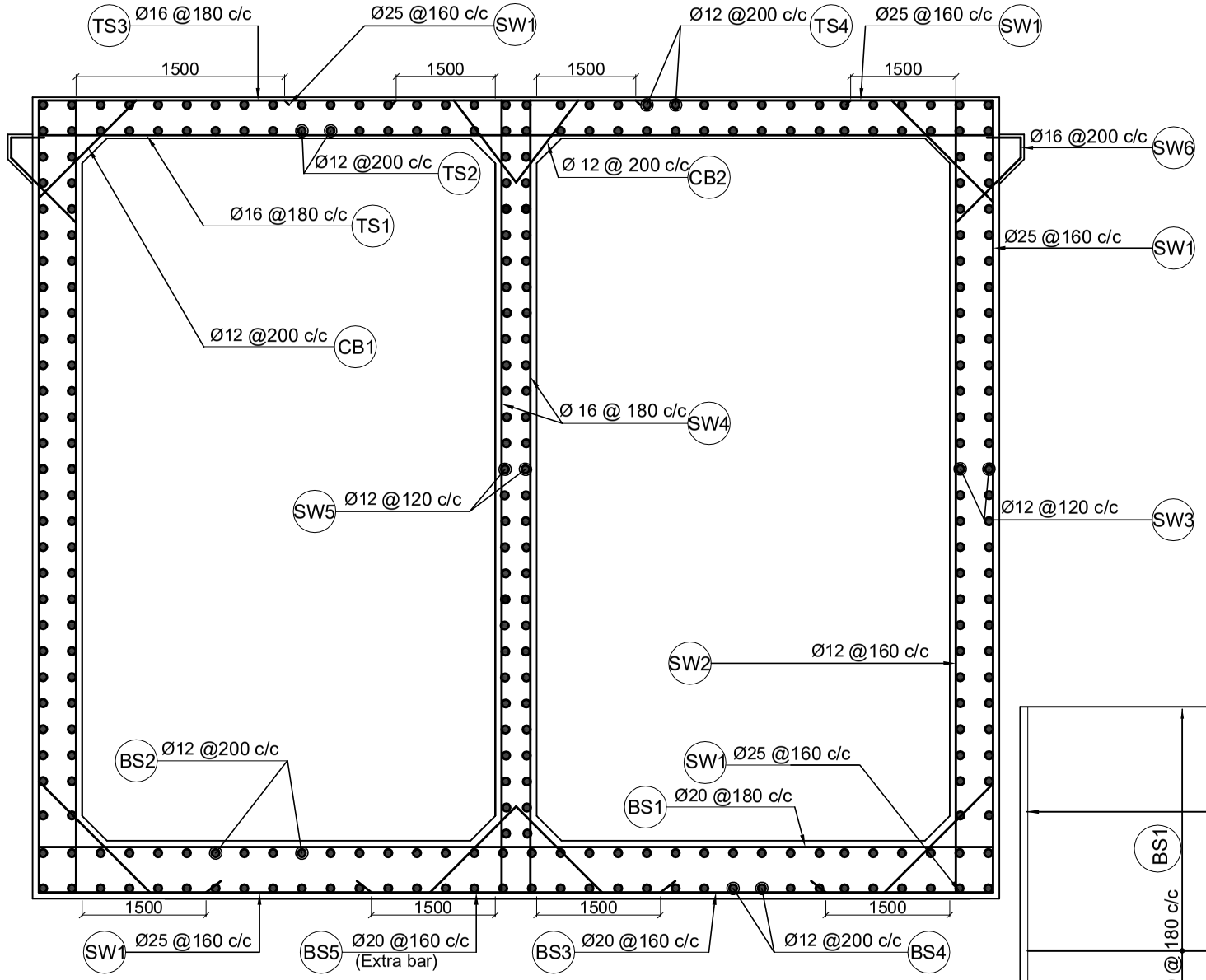

Sectional Elevation
Scale:-1:75

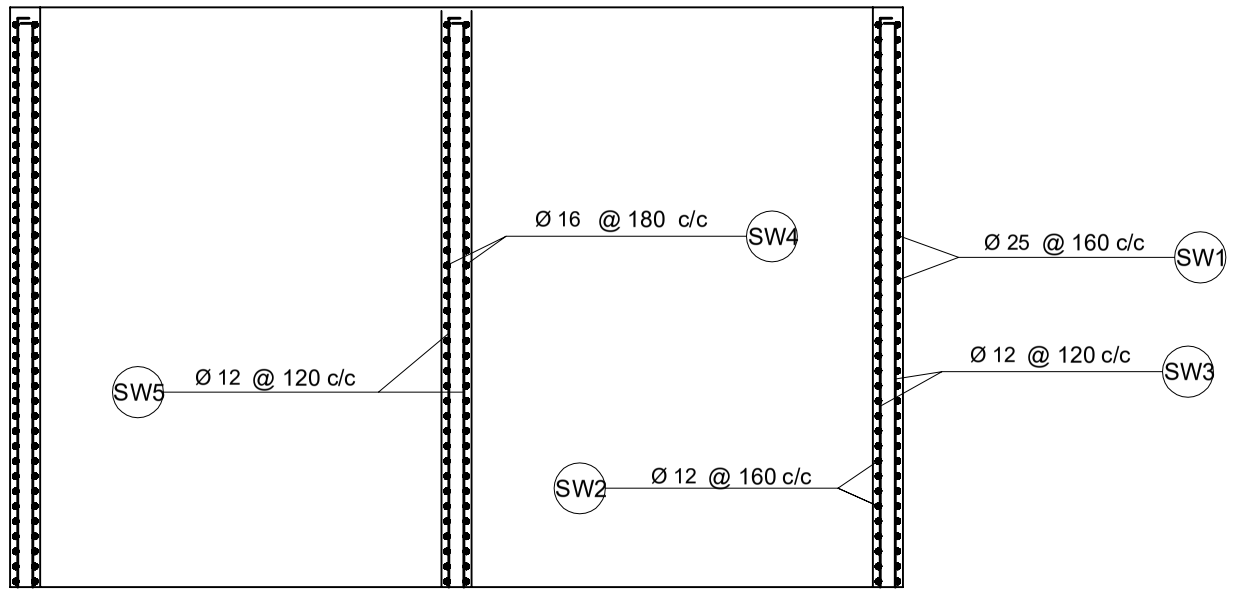

Sectional Plan of Vertical Wall
Scale:-1:75

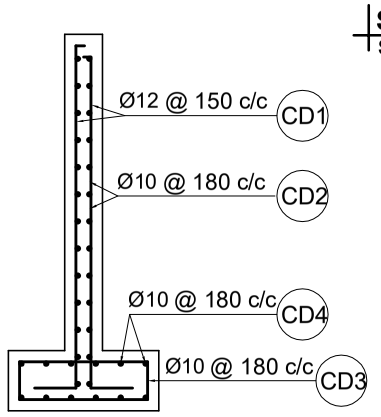

Downstream
Scale:-1:50

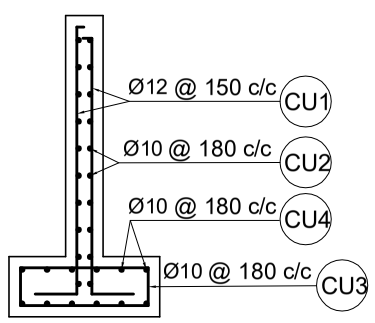

Upstream
Scale:-1:50

CURTAIN WALLS
Scale:-1:50

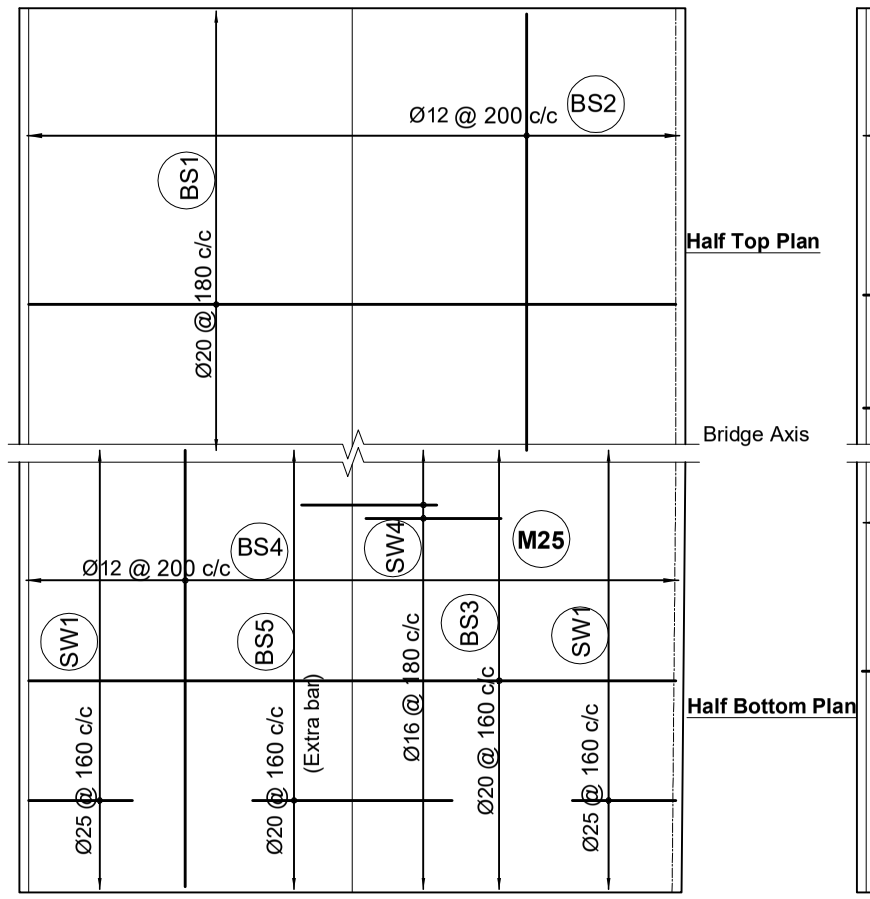

Bottom Sectional Plan
Scale:-1:100

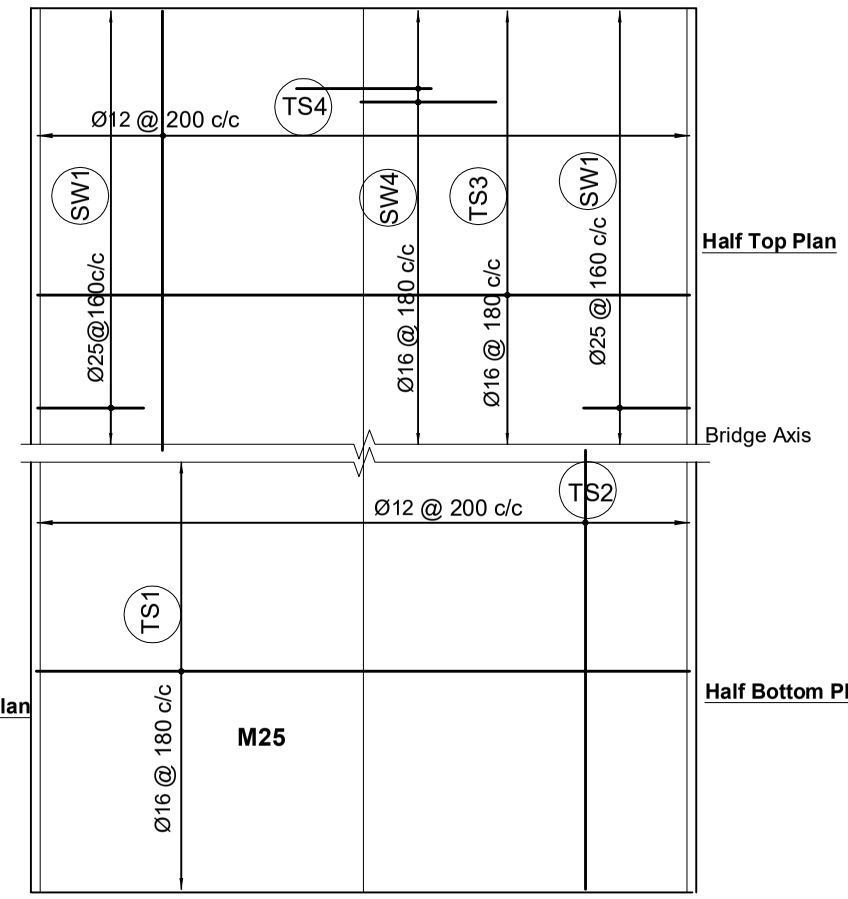

Top Sectional Plan
Scale:-1:100

Government of Nepal Ministry of Physical Infrastructure and Transport **Department of Roads** **Project Directorate Office (ADB)** **SASEC Highway Improvement Project-** **Project Preparatory Consultant (SHIP-PPC)** **ADB Loan No: 3722-NEP**	**CONSULTANT:** Soosung Engineering Co. Ltd, Korea in association with ERMC P (Ltd) and TSE-Tech Studio of Engineeering Nepal	**IMPLEMENTING AGENCY:** **DOR, DCID** **ROAD NAME:** **East West Highway (H01)** **Butwal - Gorusinghe Section**	**SHEET TITLE:** Reinforcement Details of **Dry Nala Box Bridge (5x8.5)** (46/H001/289_A,B) CH-590+695	**SCALE:** As Shown		**NAME**	**SIGNATURE**	**REV NO.**	**DESCRIPTION**
					Designed by:	P.Shrestha			
					Checked by:	P. Upadhyaya			
					Approved by:	Dr. T.H.Choi			

DATE: Nov,2022
DWG.NO.: 289_Dry Nala
SHEET NO.: 05/09

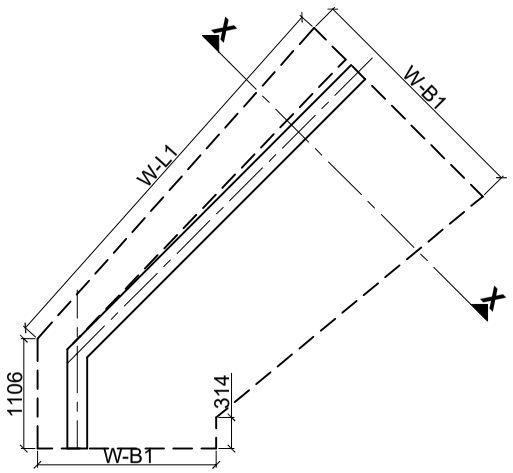

Wing Wall Plan
Scale:-1:75

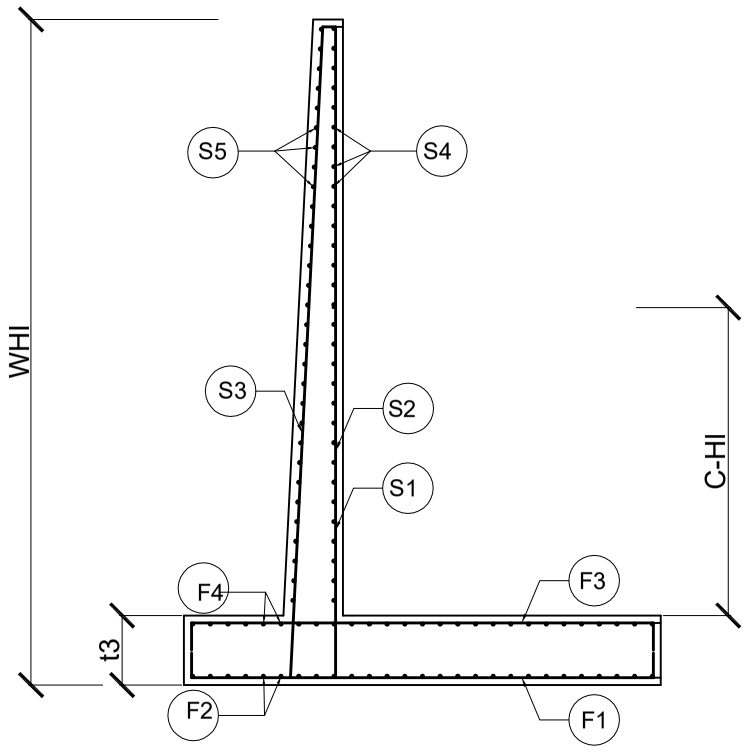

Section at X -X
Scale:-1:75

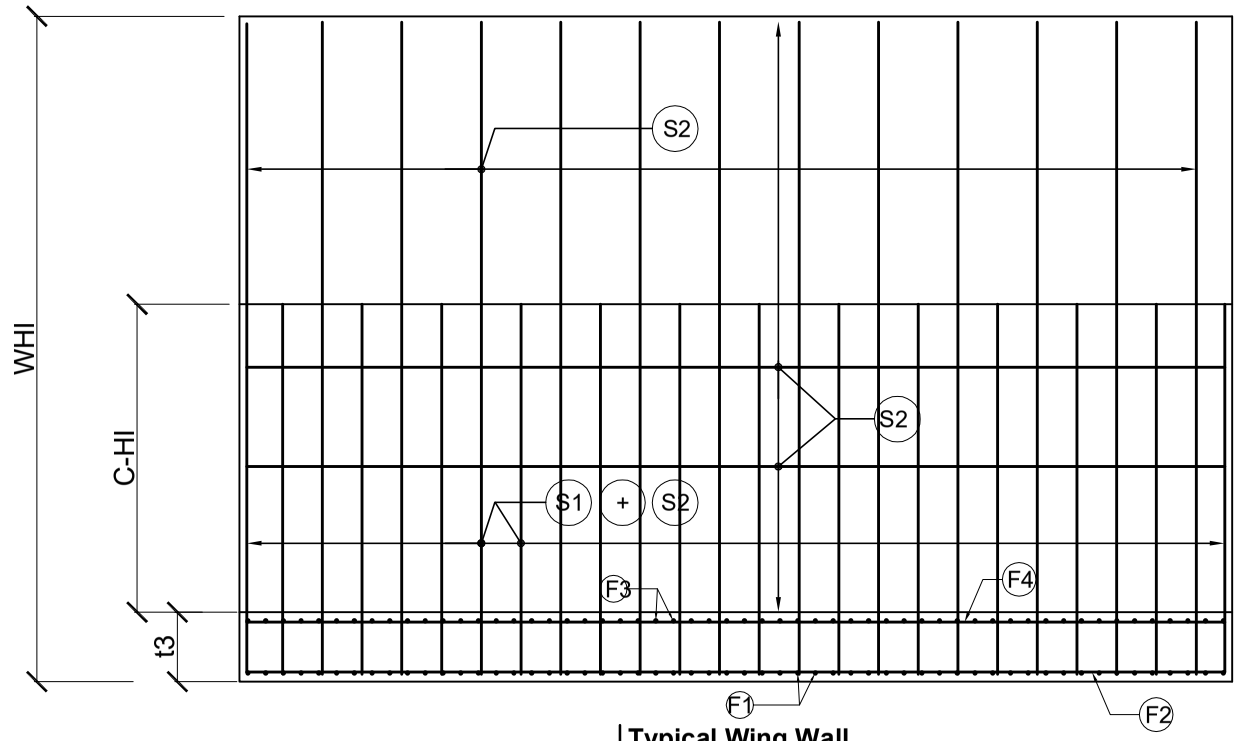

Typical Wing Wall
Scale:-1:75

S.No.	W-H1(m)	W-L1 Length	W-B1	W-B2	t1	t2	t3	x	y
1.	2.00	4300	1800	1800	200	200	200	300	1300
2.	2.50	4300	2200	1800	200	240	200	300	1660
3.	3.00	4300	2400	1800	200	280	250	450	1670
4.	3.50	500	2800	1800	200	300	250	450	2050
5.	4.00	5700	3200	1800	250	350	300	500	2350
6.	4.50	6000	3500	1800	250	400	350	500	2600
7.	5.00	6500	4000	1800	300	500	500	800	2700
8.	6.00	7000	4800	1800	300	600	700	1000	3200

REINFORCEMENT DETAIL OF WING WALL

HEIGHT W-H1	Curtailment Height C-H1	F1		F2		F3		F4		S1		S2		S3		S4		S5		Remarks
		Diameter	Spacing	Diameter	Spacing	Diameter	Spacing	Diameter	Spacing	Diameter	Spacing	Diameter	Spacing	Diameter	Spacing	Diameter	Spacing	Diameter	Spacing	
m	m	mm	mm	mm	mm	mm	mm	mm	mm	mm	mm	mm	mm	mm	mm	mm	mm	mm	mm	
2.0		8	230	8	230	12	200	8	230	12	100			10	200	8	230	8	230	
2.5		8	230	8	230	12	160	8	230	16	160			10	160	8	230	8	230	
3.0	1.60	10	230	8	230	12	140	8	230	12	180	12	180	10	180	8	230	8	230	
3.5	1.55	10	230	8	230	16	160	10	230	16	200	16	200	12	200	8	230	8	230	
4.0	1.65	10	230	10	300	16	150	10	230	16	200	16	200	12	200	10	230	10	230	
4.5	2.10	10	230	10	300	16	140	10	230	16	200	16	200	12	150	10	230	10	230	
5.0	2.45	12	220	10	250	12	150	10	250	16	180	16	180	12	160	10	230	10	230	
6.0	3.10	12	180	10	180	12	150	10	180	20	200	20	200	12	120	10	160	10	160	

Government of Nepal
Ministry of Physical Infrastructure and Transport
Department of Roads
Project Directorate Office (ADB)
SASEC Highway Improvement Project-
Project Preparatory Consultant (SHIP-PPC)
ADB Loan No: 3722-NEP

CONSULTANT:
Soosung Engineering Co. Ltd, Korea
in association with
ERMC P (Ltd)
and
TSE-Tech Studio of Engineeering Nepal

IMPLEMENTING AGENCY:
DOR, DCID

ROAD NAME:
East West Highway (H01)
Butwal - Gorusinghe Section

SHEET TITLE:
Typical Drawing of Wing Wall of
Dry Nala Box Bridge (5x8.5)
(46/H001/289_A,B)
CH-590+695

SCALE:
As Shown

	NAME	SIGNATURE	REV NO.	DESCRIPTION
Designed by:	P.Shrestha			
Checked by:	P. Upadhyaya			
Approved by:	Dr. T.H.Choi			

DATE: Nov,2022
DWG.NO.: 289_Dry Nala
SHEET NO.: 06/09

Bar Bending Schedule of Top Slab

Sketch	Spacing (mm)	Bar Mark	Ø, mm	No	Lot	Length, m	Total Length, m	Weight Kg/m	Total wt. Kg
Top Slab									
100 11720 100	180	TS1	16	118	1	11.92	1406.56	1.58	2222.71
100 10420 100	200	TS2	12	120	1	10.62	1274.40	0.89	1132.80
100 11720 100	180	TS3	16	118	1	11.92	1406.56	1.58	2222.71
100 10420 100	200	TS4	12	120	1	10.62	1274.40	0.89	1132.80
50 3600 50	300	TS5	12	72	1	3.70	266.40	0.89	236.80
							Sub-Total (Top Slab) =		6947.8
Base Slab									
100 11650 100	180	BS1	20	134	1	11.85	1587.90	2.47	3920.74
100 23850 100	200	BS2	12	60	1	24.05	1443.00	0.89	1282.67
100 11650 100	160	BS3	20	151	1	11.85	1789.35	2.47	4418.15
100 23850 100	200	BS4	12	60	1	24.05	1443.00	0.89	1282.67
50 3600 50	160	BS5	20	302	1	3.70	1117.40	2.47	2759.01
									0.0
							Sub-Total (Base Slab) =		13663.2

Bar Bending Schedule of Wing Wall

Sketch	Spacing (mm)	Bar Mark	Ø, mm	No	Lot	Length, m	Total Length, m	Weight Kg/m	Total wt. Kg
1440 to 5340; 900	200	S1	20	62	1	4.29	265.98	2.47	656.74
100; 2290 to 10090; 900	200	S2	20	62	1	7.19	445.78	2.47	1100.69
100; 2290 to 10090; 900	120	S3	12	103	1	7.19	740.57	0.89	658.28
12280	160	S4	10	40	1	12.28	491.20	0.62	303.21
12280	160	S5	10	40	1	12.28	491.20	0.62	303.21
100 1690 to 4690 100	180	F1	12	69	1	3.39	233.91	0.89	207.92
12280	180	F2	10	19	1	12.28	233.32	0.62	144.02
100 1690 to 4690 100	150	F3	12	83	1	3.39	281.37	0.89	250.11
12280	180	F4	10	19	1	12.28	233.32	0.62	144.02
12280		F5	10	6	1	12.28	73.68	0.62	45.48
							Sub-Total (Base Slab) =		3813.7

Bar Bending Schedule of Curtain Walls

Sketch	Spacing (mm)	Bar Mark	Ø, mm	No	Lot	Length, m	Total Length, m	Weight Kg/m	Total wt. Kg
Downstream									
300 2350	150	CD1	12	374	1	2.65	991.10	0.89	880.98
100 27850	180	CD2	10	15	1	55.90	838.50	0.62	517.59
850 250	180	CD3	10	156	1	2.20	343.20	0.62	211.85
27850	180	CD4	10	12	1	27.85	334.20	0.62	206.30
							Sub-Total (Downstream) =		1816.7
Upstream									
300 1850	150	CU1	12	374	1	2.15	804.10	0.89	714.76
100 27850	180	CU2	10	12	1	55.90	670.80	0.62	414.07
850 250	180	CU3	10	156	1	2.20	343.20	0.62	211.85
27850	180	CU4	10	12	1	27.85	334.20	0.62	206.30
							Sub-Total (Upstream) =		1547.0

Bar Bending Schedule of Side Walls

Sketch	spacing (mm)	Bar Mark	Ø, mm	No	Lot	Length, m	Total Length, m	Weight Kg/m	Total wt. Kg
9585 2075 2075	160	SW1	25	302	1	13.74	4147.97	3.86	16002.97
9585 150 150	160	SW2	12	302	1	9.89	2985.27	0.89	2653.57
23850 500	120	SW3	12	142	1	48.70	6915.40	0.89	6147.02
9585 2075 2075	180	SW4	16	268	1	13.74	3680.98	1.58	5816.86
23850 500	120	SW5	12	71	1	48.70	3457.70	0.89	3073.51
750; 200 300; 1061	200	SW6	16	242	1	2.31	559.26	1.58	883.77
1818	200	CB 1	12	484	1	1.82	879.91	0.89	782.14
1818 1818	200	CB 2	12	196	1	3.64	712.66	0.89	633.47
							Sub-Total (Side Walls) =		35993.3

Bar Bending Schedule of Approach Slab

Sketch	Spacing (mm)	Bar Mark	Ø, mm	No	Lot	Length, m	Total Length, m	Weight Kg/m	Total wt. Kg
100 3400 100	150	AS1	12	161	2	3.60	1159.20	0.89	1030.40
100 23900 100	150	AS2	12	24	2	24.10	1172.87	0.89	1042.55
100 3400 100	150	AS3	12	161	2	3.60	1159.20	0.89	1030.40
100 23900 100	150	AS4	12	24	2	24.10	1172.87	0.89	1042.55
							Sub-Total (Approach Slab) =		4145.9

Bar Bending Schedule of Safety Barrier Type - 1

Sketch	Spacing (mm)	Bar Mark	Ø, mm	No	Lot	Length, m	Total Length, m	Weight Kg/m	Total wt. Kg
575; 928; 225; 304	125	C1	16	81	1	2.03	164.59	1.58	260.10
915; 500	125	C2	16	81	1	1.42	114.62	1.58	181.12
9960		C3	16	11	1	9.96	109.56	1.58	173.13
							Sub-Total of 10m(Safety Barrier Type - 1) =		614.3
							For 84.8m Length		5209.3

Bar Bending Schedule of Safety Barrier Type - 2

Sketch	Spacing (mm)	Bar Mark	Ø, mm	No	Lot	Length, m	Total Length, m	Weight Kg/m	Total wt. Kg
575; 250; 555	150	C1	16	8	1	2.21	17.64	1.58	27.88
915; 730	150	C2	16	16	1	1.65	26.32	1.58	41.59
960		C3	16	12	1	0.96	11.52	1.58	18.20
							Sub-Total of 1m(Safety Barrier Type - 2) =		87.7
							For 23.6m Length		2069.7

Government of Nepal Ministry of Physical Infrastructure and Transport **Department of Roads** **Project Directorate Office (ADB)** **SASEC Highway Improvement Project-** **Project Preparatory Consultant (SHIP-PPC)** **ADB Loan No: 3722-NEP**	**CONSULTANT:** Soosung Engineering Co. Ltd, Korea in association with ERMC P (Ltd) and TSC-Tech Studio of Engineeering Nepal	**IMPLEMENTING AGENCY:** **DOR, DCID** **ROAD NAME:** **East West Highway (H01)** **Butwal - Gorusinghe Section**	**SHEET TITLE:** Bar Bending Schedule of **Dry Nala Box Bridge (5x8.5)** (46/H001/289_A,B) CH-590+695	**SCALE:** As Shown		**NAME**	**SIGNATURE**	**REV NO.**	**DESCRIPTION**
					Designed by:	P.Shrestha			
					Checked by:	P. Upadhyaya			
					Approved by:	Dr. T.H.Choi			

DATE: Nov,2022

DWG.NO.: 289_Dry Nala

SHEET NO.: 07/09

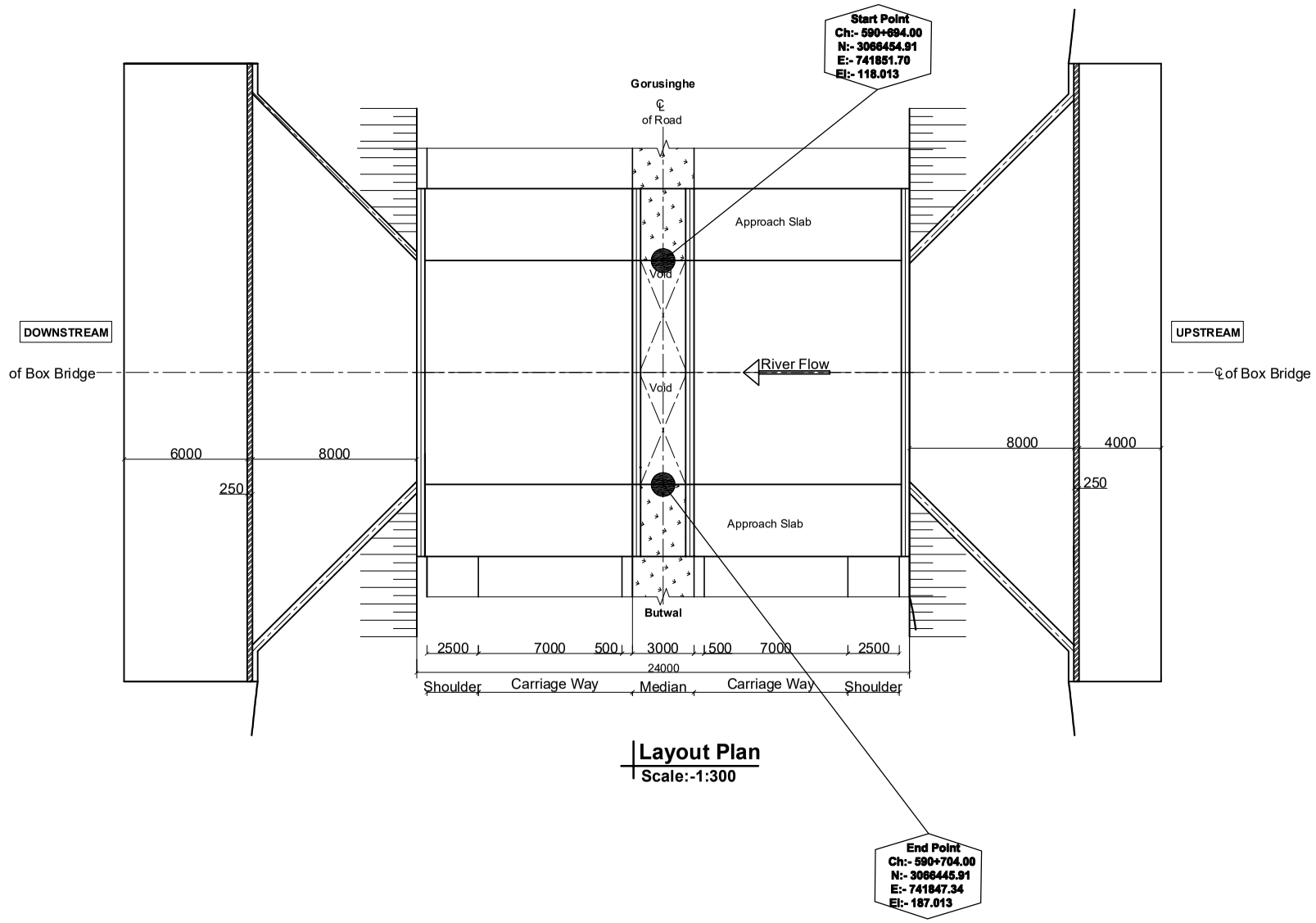

Layout Plan
Scale:-1:300

Note:-
BM Not Seen In Scale.

BM-5
N:- 3066332.26
E:- 741798.67
El:- 186.44

Government of Nepal Ministry of Physical Infrastructure and Transport **Department of Roads** **Project Directorate Office (ADB)** **SASEC Highway Improvement Project-** **Project Preparatory Consultant (SHIP-PPC)** **ADB Loan No: 3722-NEP**	**CONSULTANT:** Soosung Engineering Co. Ltd, Korea in association with ERMC P (Ltd) and TSE-Tech Studio of Engineeering Nepal	**IMPLEMENTING AGENCY:** **DOR, DCID** **ROAD NAME:** **East West Highway (H01)** **Butwal - Gorusinghe Section**	**SHEET TITLE:** Layout Plan of **Dry Nala Box Bridge (5x8.5)** (46/H001/289_A,B) CH-590+695	**SCALE:** As Shown		**NAME**	**SIGNATURE**	**REV NO.**	**DESCRIPTION**	**DATE:** Nov,2022 **DWG.NO.:** 289_Dry Nala **SHEET NO.:** 08/09
					Designed by:	P.Shrestha				
					Checked by:	P. Upadhyaya				
					Approved by:	Dr. T.H.Choi				

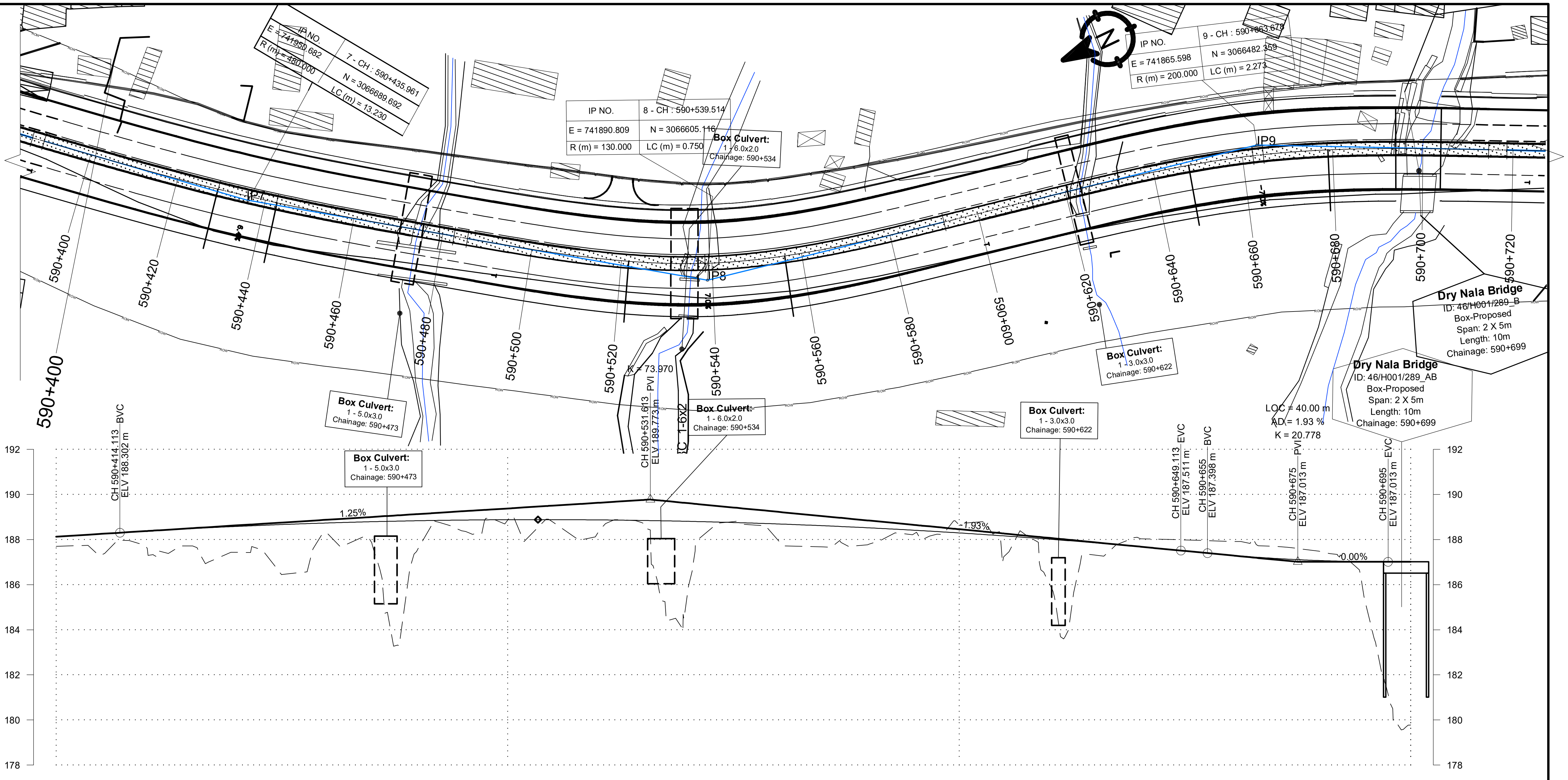

CHAINAGE(Km)	DESIGN LEVEL(m)	EXISTING LEVEL(m)
590+400	188.126	187.701
590+410	188.251	187.322
590+420	188.374	187.659
590+430	188.484	187.713
590+440	188.581	187.431
590+450	188.665	186.446
590+460	188.735	188.289
590+470	188.791	187.772
590+480	188.834	187.538
590+490	188.863	188.381
590+500	188.879	188.863
590+510	188.881	188.776
590+520	188.870	188.299
590+530	188.845	188.723
590+540	188.807	185.852
590+550	188.755	188.794
590+560	188.690	187.944
590+570	188.611	187.673
590+580	188.519	187.790
590+590	188.413	188.255
590+600	188.294	188.712
590+610	188.161	187.265
590+620	188.015	186.031
590+630	187.855	187.310
590+640	187.681	188.047
590+650	187.494	187.983
590+660	187.308	187.918
590+670	187.163	187.694
590+680	187.067	187.470
590+690	187.019	185.197
590+700	187.013	179.780

HORIZONTAL ALIGNMENT (RIGHT / LEFT): IP-7 R=480.00; IP-8 R=130.00; IP-9 R=200.00

SUPER ELEVATION: 590+400; T; 590+429.207; 6.44; 590+442.644; T; 590+521.645; 7; 590+556.228; T; 590+647.93; -7; T; 590+678.99; 590+700

Government of Nepal Ministry of Physical Infrastructure and Transport **Department of Roads** **Project Directorate Office (ADB)** **SASEC Highway Improvement Project-** **Project Preparatory Consultant (SHIP-PPC)** **ADB Loan No: 3722-NEP**	**CONSULTANT:** Soosung Engineering Co. Ltd, Korea in association with ERMC P (Ltd), Nepal and TTE-Tech Studio of Engineeering	**IMPLEMENTING AGENCY:** **DOR, DCID** **ROAD NAME:** **East West Highway (H01)** Butwal - Gorusinghe Section	**SHEET TITLE:** Plan And Profile of Dry Nala Box Bridge CH:590+400 - CH:590+700	**SCALE:** 0 2 4 6m Vertical Scale 0 10 20 30m Horizontal Scale

	NAME	SIGNATURE	REV NO.	DESCRIPTION
DESIGNED BY:	S.B. Shrestha			
CHECKED BY:	P. Upadhyaya			
APPROVED BY:	Dr. T.H.Choi			

DATE: September, 2022
DWG.NO.: 289_Dry Nala
SHEET NO.: 09/09

Government of Nepal

Ministry of Physical Infrastructure and Transport

Department of Roads

Project Directorate (ADB)

Implementing Agency : DOR, DCID

Project Preparatory Consultants

Under

SASEC Highway Improvement Project (SHIP-PPC)

(ADB Loan No: 3722 Nep)

Contract No. SHIP/PPC/2020/02

Dry Nala Bridge(46-H001-290_AB)

St. Ch : 590+754.10 ~ End Ch : 590+765.90

Detailed Drawing

Butwal - Gorusinghe Sector

November,2022

CONTENTS

S.No.	DESCRIPTION	DWG. NO	NO. OF SHEETS
1.	General Notes.	1	1
2.	General Arrangement.	2	1
3.	Concrete Outline.	3	1
4.	Reinforcement Details.	4	1
5.	Typical Drawing of Wing Wall.	5	1
6.	Bar Bending Schedule.	6	1
7.	Layout Plan.	7	1
8.	Plan & Profile.	8-9	2

GENERAL NOTES

a) Bridge Design Specifications

IRC Standard Specifications and Code of Practice for Road Bridges - All Relevant Sections.

b) Bridge Design Method

Limit State method.

c) Live Load

IRC Class A and IRC Class 70R, Tracked and Wheeled vehicles. Load combinations are adopted as per IRC:6-2017, Section: II, Loads and Load Combinations.

Pedestrian Load: 4kN/m².

d) Concrete

Concrete Class for box, Approach Slab and Safety Kerb is M25.

e) Steel Reinforcement

Reinforcing Steel shall be HYSD bars of grade Fe 500 confirming to IS: 1786-2008.

f) Lap Length

Minimum Lap Length is 65xdiameter of steel reinforcement.

Laps shall be in staggered position.

Lapped bars more tha 50% shall not be allowed.

g) Clear covers

Top Slab

The clear cover to steel reinforcement is 40mm.

Side Wall and Base Slab

The clear cover to steel reinforcement steel is 75mm.

Approach Slab

The clear cover to steel reinforcement steel is 40mm.

Safety Kerb

The clear cover to steel reinforcement steel is 25mm.

h) All dimensions are in millimeters except otherwise mentioned.

Government of Nepal Ministry of Physical Infrastructure and Transport **Department of Roads** **Project Directorate Office (ADB)** **SASEC Highway Improvement Project-** **Project Preparatory Consultant (SHIP-PPC)** **ADB Loan No: 3722-NEP**	**CONSULTANT:** Soosung Engineering Co. Ltd, Korea in association with ERMC P (Ltd) and TSC-Tech Studio of Engineeering Nepal	**IMPLEMENTING AGENCY:** **DOR, DCID** **ROAD NAME:** **East West Highway (H01)** **Butwal - Gorusinghe Section**	**SHEET TITLE:** General Notes of **Dry Nala Box Bridge (5x6.75)** (46/H001/290_A,B) CH-590+760	**SCALE:** As Shown		**NAME**	**SIGNATURE**	**REV NO.**	**DESCRIPTION**	**DATE:** Nov,2022
					Designed by:	P.Shrestha				**DWG.NO.:** 290_Dry Nala
					Checked by:	P. Upadhyaya				
					Approved by:	Dr. T.H.Choi				**SHEET NO.:** 01/09

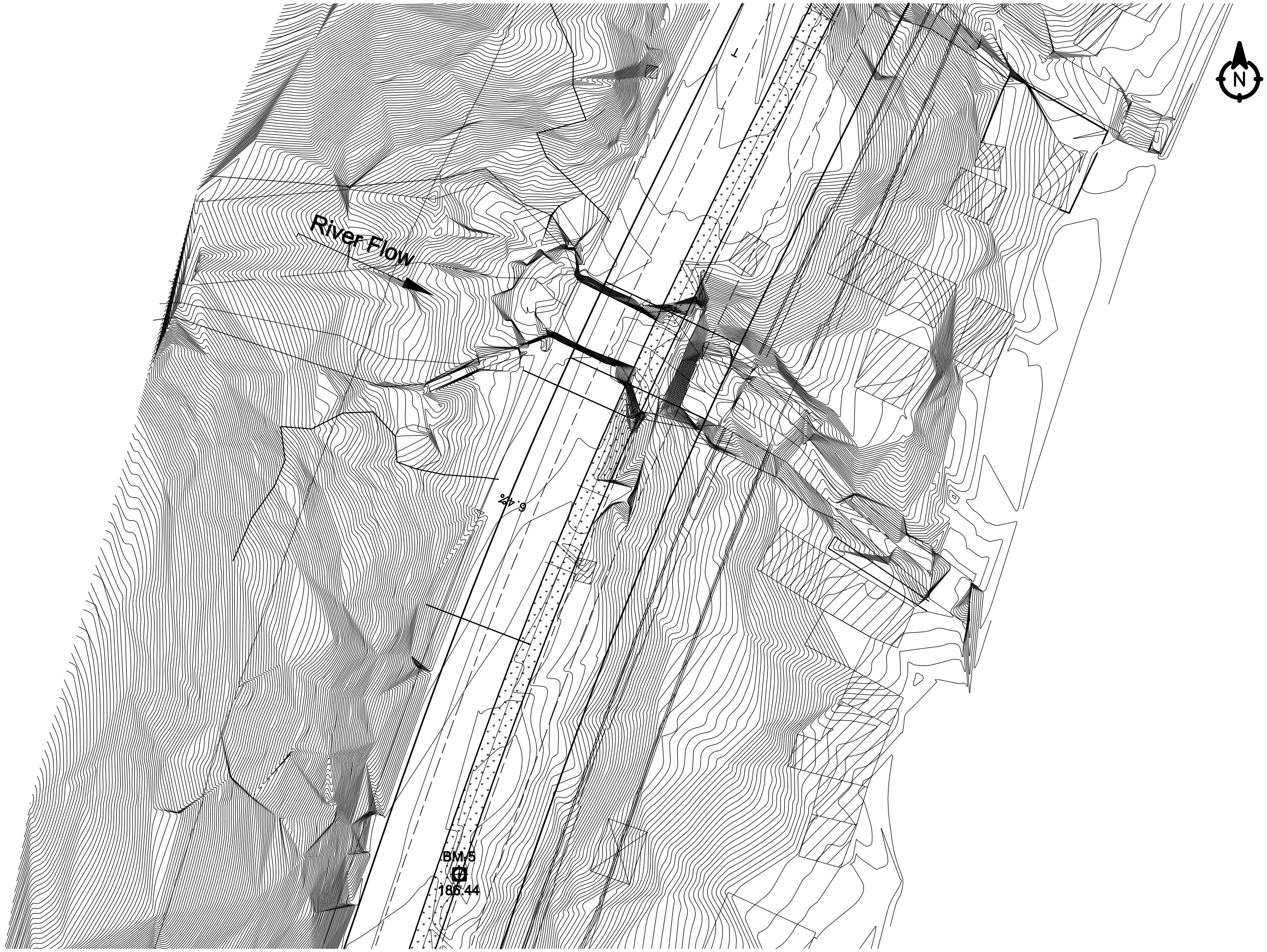

Government of Nepal Ministry of Physical Infrastructure and Transport **Department of Roads** **Project Directorate Office (ADB)** **SASEC Highway Improvement Project-** **Project Preparatory Consultant (SHIP-PPC)** **ADB Loan No: 3722-NEP**	**CONSULTANT:** Soosung Engineering Co. Ltd, Korea in association with ERMC P (Ltd) and TTE-Tech Studio of Engineeering Nepal	**IMPLEMENTING AGENCY:** **DOR, DCID** **ROAD NAME:** **East West Highway (H01)** **Butwal - Gorusinghe Section**	**SHEET TITLE:** Topographic Map of **Dry Nala Box Bridge (5x6.75)** (46/H001/290_A,B) CH-590+760	**SCALE:** 2:1		**NAME**	**SIGNATURE**	**REV NO.**	**DESCRIPTION**	**DATE:** Nov,2022 **DWG.NO.:** 290_Dry Nala **SHEET NO.:** 02/09
					Designed by:	P.Shrestha				
					Checked by:	P. Upadhyaya				
					Approved by:	Dr. T.H.Choi				

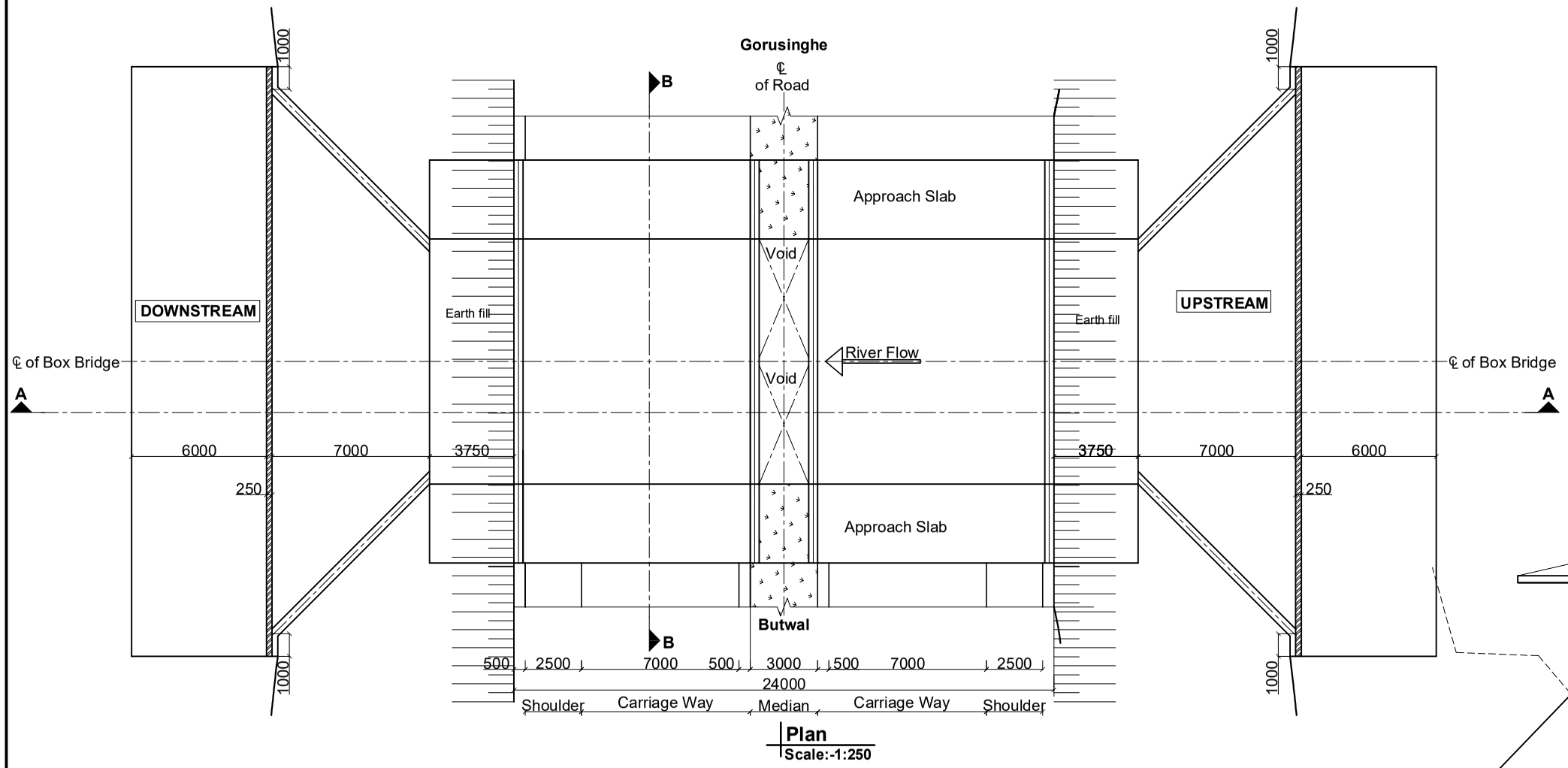

Plan
Scale:-1:250

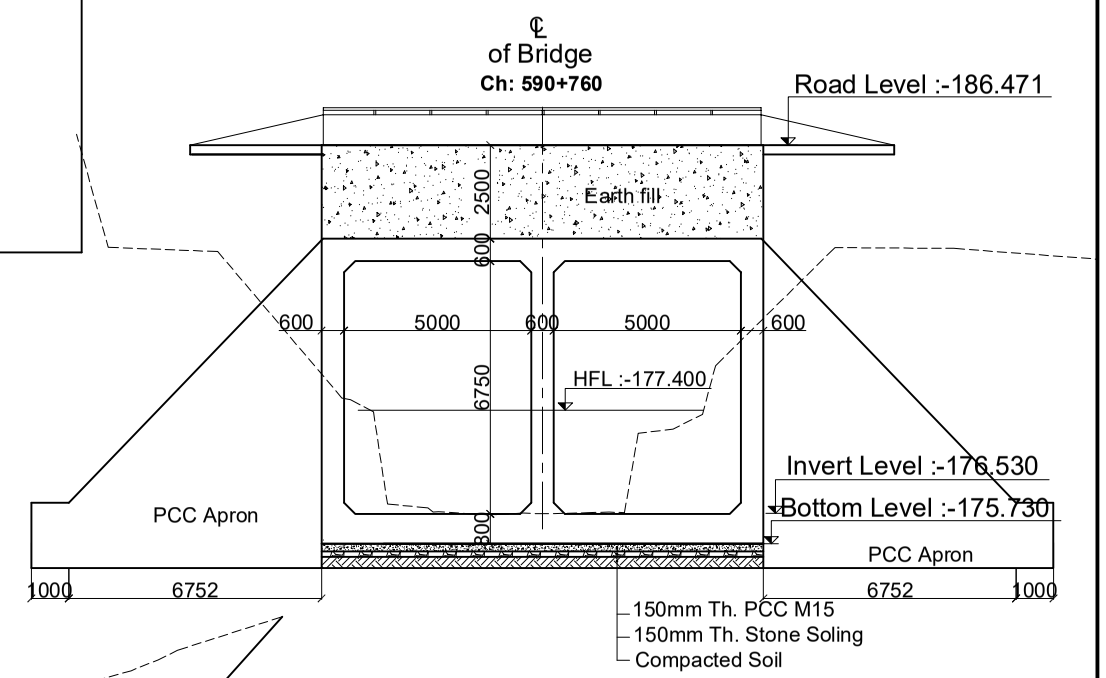

Section at B-B
Scale: 1:200

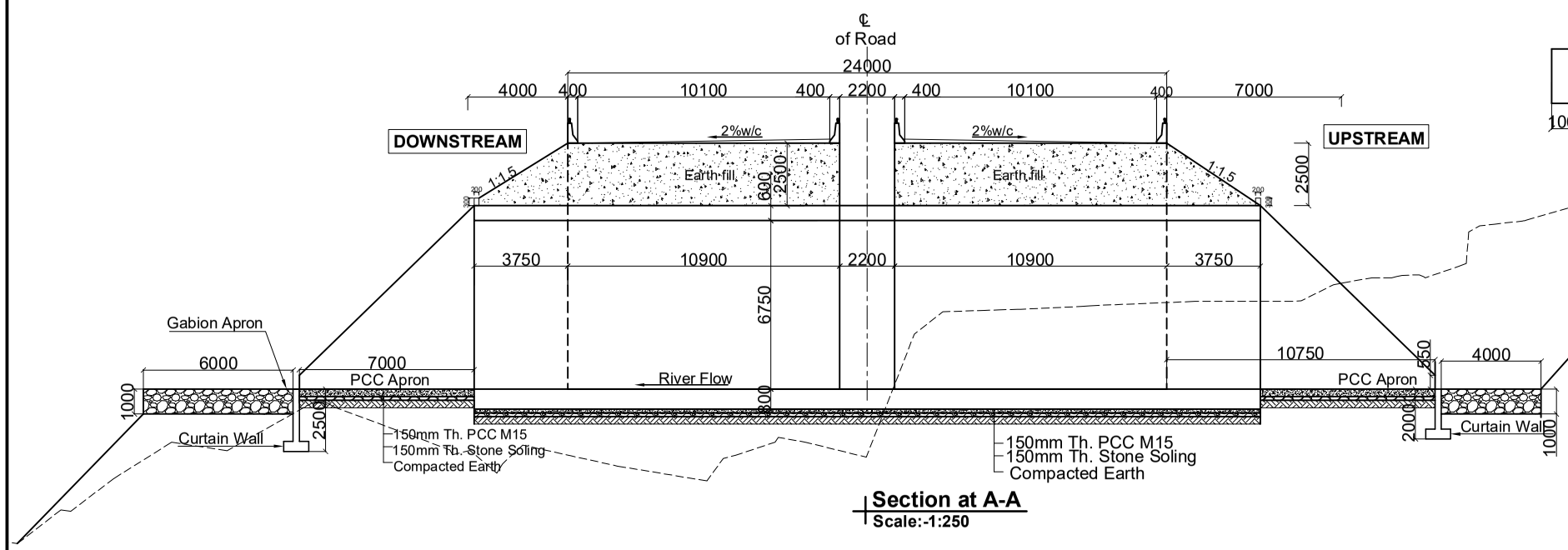

Section at A-A
Scale:-1:250

	Name(NMC Number)	Signature
P. Engineer	P. Upadhyaya (Civil A 675)	
Structure Engineer	K.P.Wagle(Civil A 127) / P.Shrestha(Civil A 676) / S.Bhattarai (Civil A 904)	
Hydrologist	Dr. P.C. Jha(Civil A 166) / S. Adhikari (Civil A 408)	
Geotechnical Engineer	A. Adhikari(ka 199) / Dr. V . R. S. Shahi	

Government of Nepal
Ministry of Physical Infrastructure and Transport
Department of Roads
Project Directorate Office (ADB)
SASEC Highway Improvement Project-
Project Preparatory Consultant (SHIP-PPC)
ADB Loan No: 3722-NEP

CONSULTANT:
Soosung Engineering Co. Ltd,
Korea
in association with
ERMC P (Ltd)
and
TSE-Tech Studio of Engineeering
Nepal

IMPLEMENTING AGENCY:
DOR, DCID

ROAD NAME:
East West Highway (H01)

Butwal - Gorusinghe Section

SHEET TITLE:
General Arrangement
of
Dry Nala Box Bridge (5x6.75)
(46/H001/290_A,B)
CH-590+760

SCALE:
As Shown

	NAME	SIGNATURE	REV NO.	DESCRIPTION
Designed by:	P.Shrestha			
Checked by:	P. Upadhyaya			
Approved by:	Dr. T.H.Choi			

DATE: Nov,2022
DWG.NO.: 290_Dry Nala
SHEET NO.: 03/09

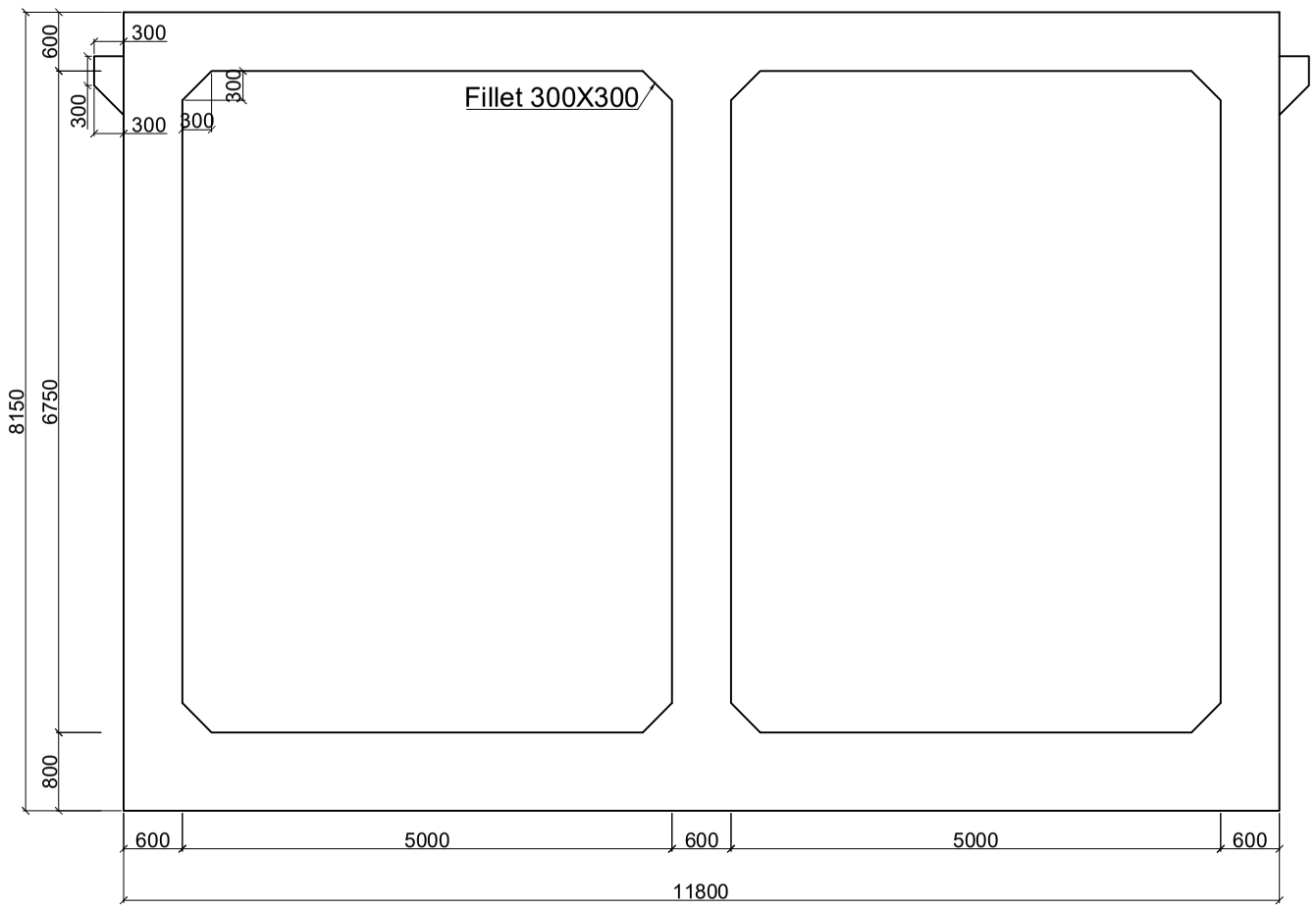

Concrete Outlines (Sectional Elevation)
Scale:-1:50

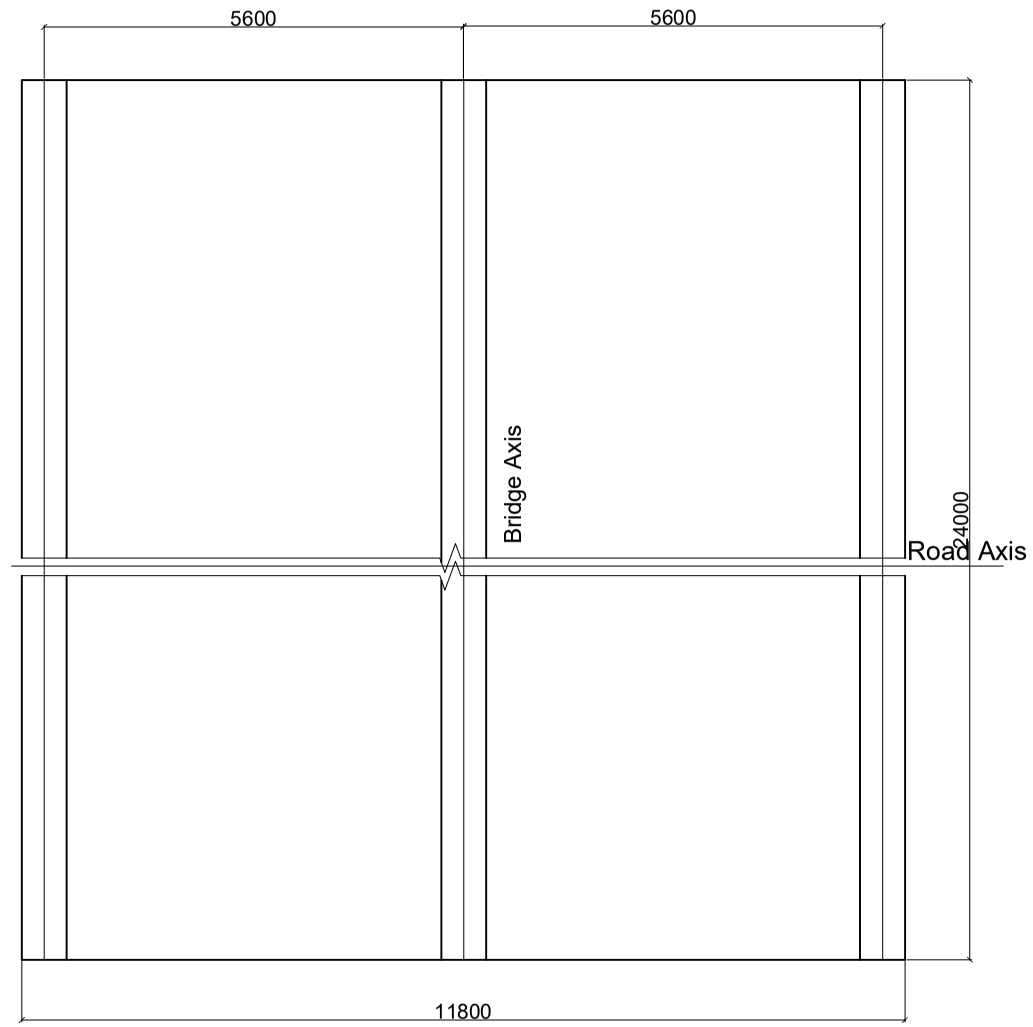

Concrete Outlines (Plan)
Scale:-1:100

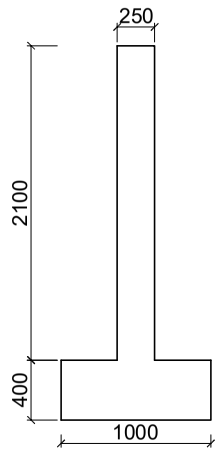

Curtain Wall D/S
Scale:-1:50

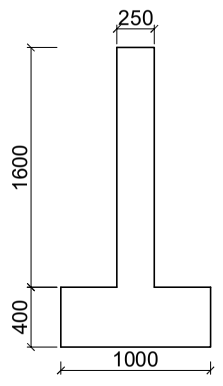

Curtain Wall U/S
Scale:-1:50

Government of Nepal Ministry of Physical Infrastructure and Transport **Department of Roads** **Project Directorate Office (ADB)** **SASEC Highway Improvement Project-** **Project Preparatory Consultant (SHIP-PPC)** **ADB Loan No: 3722-NEP**	**CONSULTANT:** Soosung Engineering Co. Ltd, Korea in association with ERMC P (Ltd) and TS-Tech Studio of Engineeering Nepal	**IMPLEMENTING AGENCY:** **DOR, DCID** **ROAD NAME:** **East West Highway (H01)** **Butwal - Gorusinghe Section**	**SHEET TITLE:** Concrete Outline of **Dry Nala Box Bridge (5x6.75)** (46/H001/290_A,B) CH-590+760	**SCALE:** As Shown		**NAME**	**SIGNATURE**	**REV NO.**	**DESCRIPTION**	**DATE:** Nov,2022 **DWG.NO.:** 290_Dry Nala **SHEET NO.:** 04/09
					Designed by:	P.Shrestha				
					Checked by:	P. Upadhyaya				
					Approved by:	Dr. T.H.Choi				

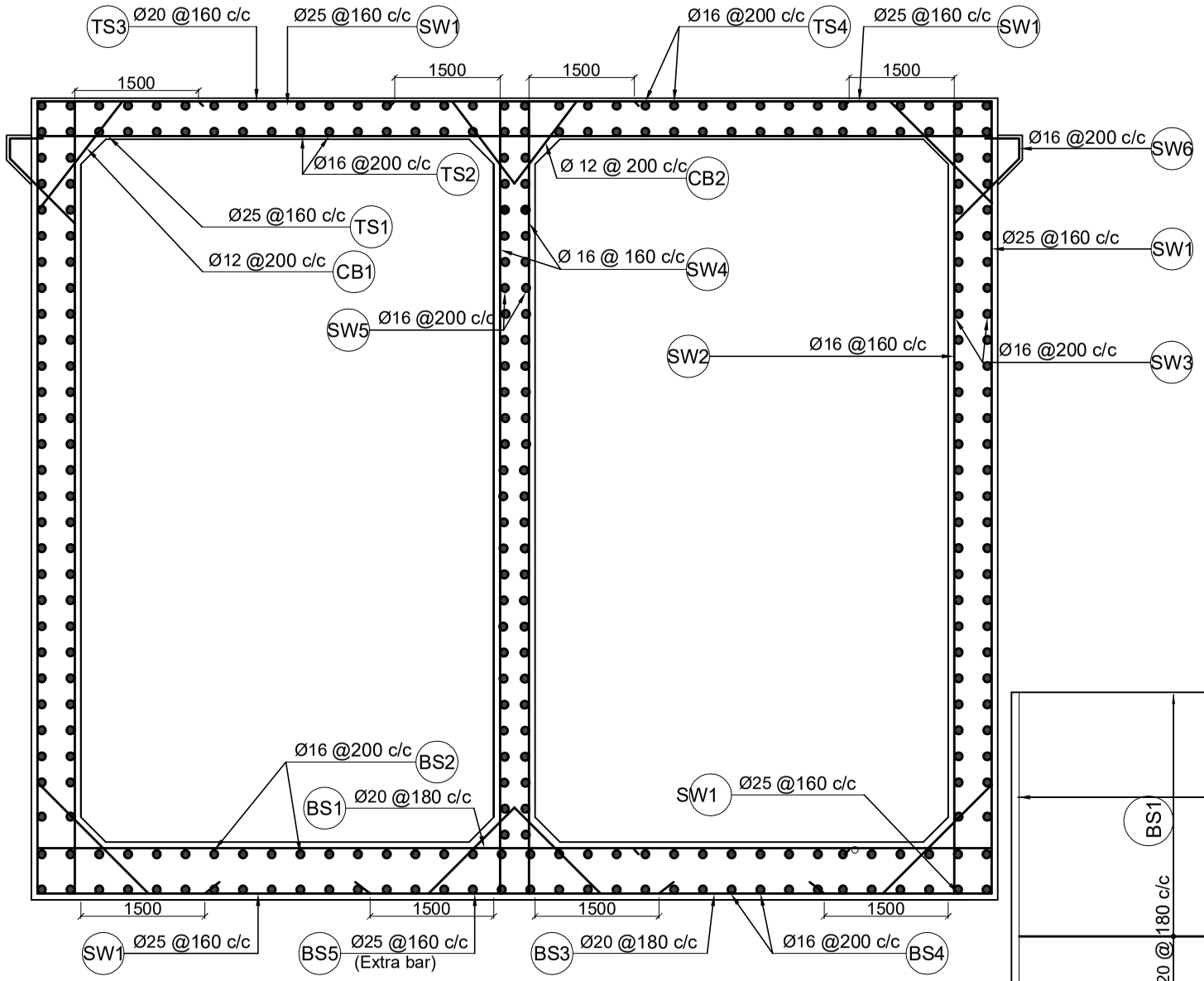

Sectional Elevation
Scale:-1:75

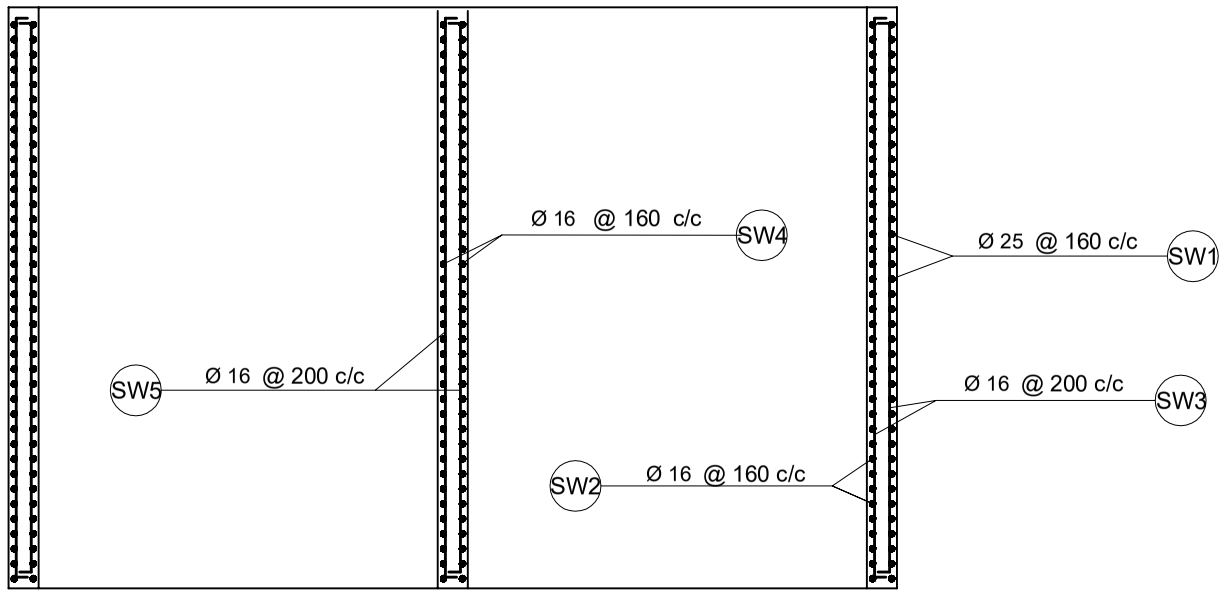

Sectional Plan of Vertical Wall
Scale:-1:75

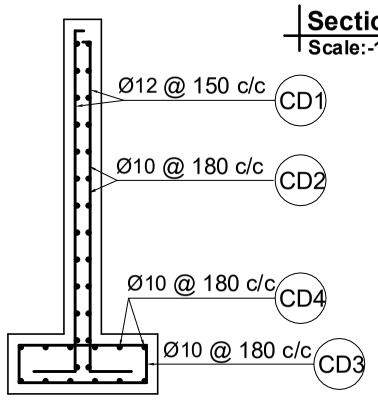

Downstream
Scale:-1:50

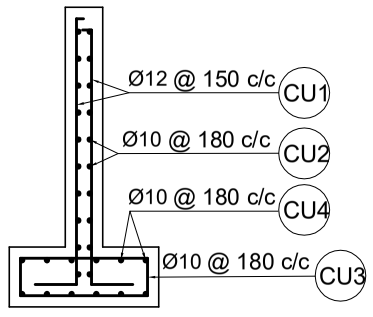

Upstream
Scale:-1:50

CURTAIN WALLS
Scale:-1:50

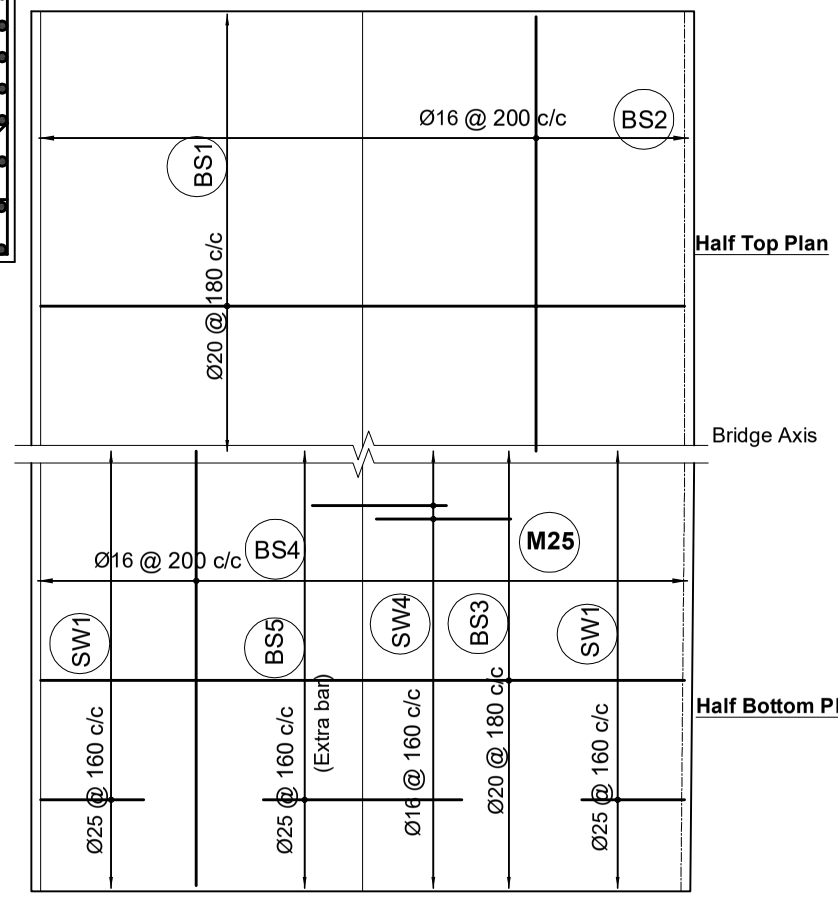

Bottom Sectional Plan
Scale:-1:100

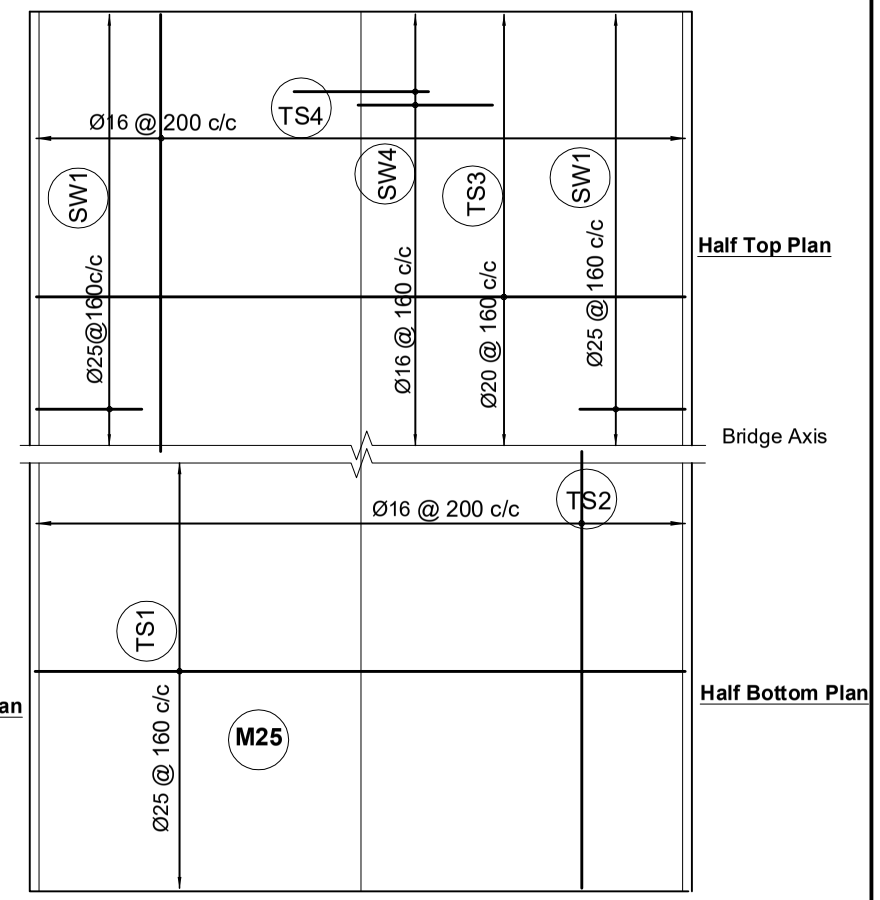

Top Sectional Plan
Scale:-1:100

Government of Nepal Ministry of Physical Infrastructure and Transport **Department of Roads** **Project Directorate Office (ADB)** **SASEC Highway Improvement Project-** **Project Preparatory Consultant (SHIP-PPC)** **ADB Loan No: 3722-NEP**	**CONSULTANT:** Soosung Engineering Co. Ltd, Korea in association with ERMC P (Ltd) and TSC-Tech Studio of Engineeering Nepal	**IMPLEMENTING AGENCY:** **DOR, DCID** **ROAD NAME:** **East West Highway (H01)** **Butwal - Gorusinghe Section**	**SHEET TITLE:** Reinforcement Details of **Dry Nala Box Bridge (5x6.75)** (46/H001/290_A,B) CH-590+760	**SCALE:** As Shown		**NAME**	**SIGNATURE**	**REV NO.**	**DESCRIPTION**	**DATE:** Nov,2022 **DWG.NO.:** 290_Dry Nala **SHEET NO.:** 05/09
					Designed by:	P.Shrestha				
					Checked by:	P. Upadhyaya				
					Approved by:	Dr. T.H.Choi				

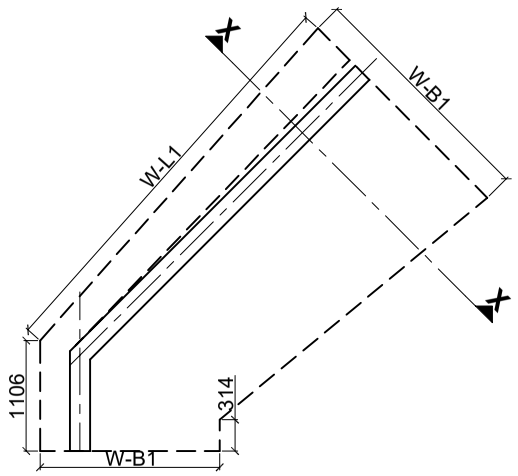

Wing Wall Plan
Scale:-1:75

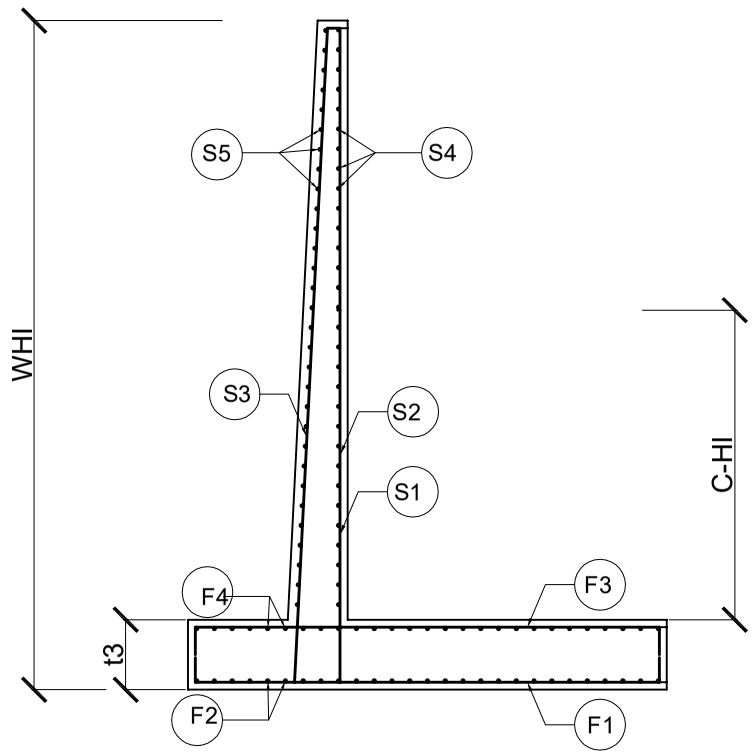

Section at X -X
Scale:-1:75

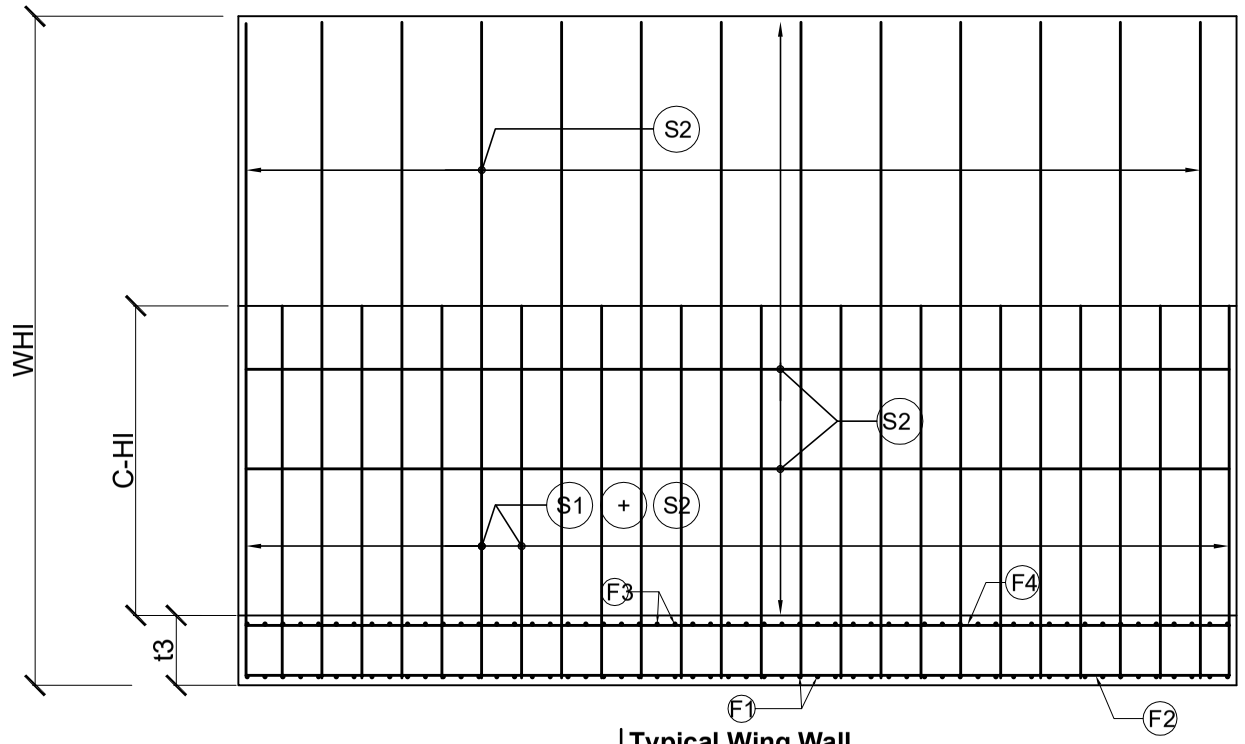

Typical Wing Wall
Scale:-1:75

S.No.	W-H1(m)	W-L1 Length	W-B1	W-B2	t1	t2	t3	x	y
1.	2.00	4300	1800	1800	200	200	200	300	1300
2.	2.50	4300	2200	1800	200	240	200	300	1660
3.	3.00	4300	2400	1800	200	280	250	450	1670
4.	3.50	500	2800	1800	200	300	250	450	2050
5.	4.00	5700	3200	1800	250	350	300	500	2350
6.	4.50	6000	3500	1800	250	400	350	500	2600
7.	5.00	6500	4000	1800	300	500	500	800	2700
8.	6.00	7000	4800	1800	300	600	700	1000	3200

REINFORCEMENT DETAIL OF WING WALL

HEIGHT W-H1	Curtailment Height C-H1	F1		F2		F3		F4		S1		S2		S3		S4		S5		Remarks
		Diameter	Spacing	Diameter	Spacing	Diameter	Spacing	Diameter	Spacing	Diameter	Spacing	Diameter	Spacing	Diameter	Spacing	Diameter	Spacing	Diameter	Spacing	
m	m	mm	mm	mm	mm	mm	mm	mm	mm	mm	mm	mm	mm	mm	mm	mm	mm	mm	mm	
2.0		8	230	8	230	12	200	8	230	12	100			10	200	8	230	8	230	
2.5		8	230	8	230	12	160	8	230	16	160			10	160	8	230	8	230	
3.0	1.60	10	230	8	230	12	140	8	230	12	180	12	180	10	180	8	230	8	230	
3.5	1.55	10	230	8	230	16	160	10	230	16	200	16	200	12	200	8	230	8	230	
4.0	1.65	10	230	10	300	16	150	10	230	16	200	16	200	12	200	10	230	10	230	
4.5	2.10	10	230	10	300	16	140	10	230	16	200	16	200	12	150	10	230	10	230	
5.0	2.45	12	220	10	250	12	150	10	250	16	180	16	180	12	160	10	230	10	230	
6.0	3.10	12	180	10	180	12	150	10	180	20	200	20	200	12	120	10	160	10	160	

Government of Nepal Ministry of Physical Infrastructure and Transport **Department of Roads** **Project Directorate Office (ADB)** **SASEC Highway Improvement Project-** **Project Preparatory Consultant (SHIP-PPC)** **ADB Loan No: 3722-NEP**	**CONSULTANT:** Soosung Engineering Co. Ltd, Korea in association with ERMC P (Ltd) and TSC-Tech Studio of Engineeering Nepal	**IMPLEMENTING AGENCY:** **DOR, DCID** **ROAD NAME:** **East West Highway (H01)** **Butwal - Gorusinghe Section**	**SHEET TITLE:** Typical Drawing of Wing Wall of **Dry Nala Box Bridge (5x6.75)** (46/H001/290_A,B) CH-590+760	**SCALE:** As Shown		**NAME**	**SIGNATURE**	**REV NO.**	**DESCRIPTION**	**DATE:** Nov,2022 **DWG.NO.:** 290_Dry Nala **SHEET NO.:** 06/09
					Designed by:	P.Shrestha				
					Checked by:	P. Upadhyaya				
					Approved by:	Dr. T.H.Choi				

Bar Bending Schedule of Top Slab

Sketch	Spacing (mm)	Bar Mark	Ø, mm	No	Lot	Length, m	Total Length, m	Weight Kg/m	Total wt. Kg
Top Slab									
100 11720 100	160	TS1	25	134	1	11.92	1597.28	3.86	6162.35
100 10420 100	200	TS2	16	120	1	10.62	1274.40	1.58	2013.87
100 11720 100	160	TS3	20	134	1	11.92	1597.28	2.47	3943.90
100 10420 100	200	TS4	16	120	1	10.62	1274.40	1.58	2013.87
50 3600 50	300	TS5	12	72	1	3.70	266.40	0.89	236.80
								Sub-Total (Top Slab) =	14370.8
Base Slab									
100 11650 100	180	BS1	20	134	1	11.85	1587.90	2.47	3920.74
100 23850 100	200	BS2	16	60	1	24.05	1443.00	1.58	2280.30
100 11650 100	180	BS3	20	134	1	11.85	1587.90	2.47	3920.74
100 23850 100	200	BS4	16	60	1	24.05	1443.00	1.58	2280.30
50 3600 50	160	BS5	25	302	1	3.70	1117.40	3.86	4310.96
								Sub-Total (Base Slab) =	16713.0

Bar Bending Schedule of Side Walls

Sketch	spacing (mm)	Bar Mark	Ø, mm	No	Lot	Length, m	Total Length, m	Weight Kg/m	Total wt. Kg
8035 2075 2075	160	SW1	25	302	1	12.19	3679.87	3.86	14197.03
8035 150 150	160	SW2	16	302	1	8.34	2517.17	1.58	3977.75
500 23850 500	200	SW3	16	68	1	48.70	3311.60	1.58	5233.15
8035 2075 2075	160	SW4	16	302	1	12.19	3679.87	1.58	5815.10
500 23850 500	200	SW5	16	34	1	48.70	1655.80	1.58	2616.57
750 200 300 1061	200	SW6	16	242	1	2.31	559.26	1.58	883.77
1959	200	CB 1	12	484	1	1.96	948.16	0.89	842.81
1959 1959	200	CB 2	12	168	1	3.92	658.22	0.89	585.09
								Sub-Total (Side Walls) =	34151.3

Bar Bending Schedule of Curtain Walls

Sketch	Spacing (mm)	Bar Mark	Ø, mm	No	Lot	Length, m	Total Length, m	Weight Kg/m	Total wt. Kg
Downstream									
300 2350	150	CD1	12	348	1	2.65	922.20	0.89	819.73
100 25850	180	CD2	10	15	1	51.90	778.50	0.62	480.56
850 250	180	CD3	10	145	1	2.20	319.00	0.62	196.91
25850	180	CD4	10	12	1	25.85	310.20	0.62	191.48
								Sub-Total (Downstream) =	1688.7
Upstream									
300 1850	150	CU1	12	348	1	2.15	748.20	0.89	665.07
100 25850 100	180	CU2	10	12	1	51.90	622.80	0.62	384.44
850 250	180	CU3	10	145	1	2.20	319.00	0.62	196.91
25850	180	CU4	10	12	1	25.85	310.20	0.62	191.48
								Sub-Total (Upstream) =	1437.9

Bar Bending Schedule of Wing Wall

Sketch	Spacing (mm)	Bar Mark	Ø, mm	No	Lot	Length, m	Total Length, m	Weight Kg/m	Total wt. Kg
1440 to 4460 900	200	S1	20	55	1	3.85	211.75	2.47	522.84
100 2290 to 8340 900	200	S2	20	55	1	6.31	347.05	2.47	856.91
100 2290 to 8340 900	120	S3	12	92	1	6.31	580.52	0.89	516.02
10860	160	S4	10	34	1	10.86	369.24	0.62	227.93
10860	160	S5	10	34	1	10.86	369.24	0.62	227.93
100 1690 to 4690 100	180	F1	12	61	1	3.39	206.79	0.89	183.81
10860	180	F2	10	19	1	10.86	206.34	0.62	127.37
100 1690 to 4690 100	150	F3	12	73	1	3.39	247.47	0.89	219.97
10860	180	F4	10	19	1	10.86	206.34	0.62	127.37
10860		F5	10	6	1	10.86	65.16	0.62	40.22
								Sub-Total (Base Slab) =	3050.4
									0.0

Bar Bending Schedule of Approach Slab

Sketch	Spacing (mm)	Bar Mark	Ø, mm	No	Lot	Length, m	Total Length, m	Weight Kg/m	Total wt. Kg
100 3400 100	150	AS1	12	161	2	3.60	1159.20	0.89	1030.40
100 23900 100	150	AS2	12	24	2	24.10	1156.80	0.89	1028.27
100 3400 100	150	AS3	12	161	2	3.60	1159.20	0.89	1030.40
100 23900 100	150	AS4	12	24	2	24.10	1156.80	0.89	1028.27
								Sub-Total (Approach Slab) =	4117.3

Bar Bending Schedule of Safety Barrier Type - 1

Sketch	Spacing (mm)	Bar Mark	Ø, mm	No	Lot	Length, m	Total Length, m	Weight Kg/m	Total wt. Kg
575 928 225 304	125	C1	16	81	1	2.03	164.59	1.58	260.10
915 500	125	C2	16	81	1	1.42	114.62	1.58	181.12
9960		C3	16	11	1	9.96	109.56	1.58	173.13
								Sub-Total of 10m(Safety Barrier Type - 1) =	614.3
								For 84.8m Length	5209.3

Bar Bending Schedule of Safety Barrier Type - 2

Sketch	Spacing (mm)	Bar Mark	Ø, mm	No	Lot	Length, m	Total Length, m	Weight Kg/m	Total wt. Kg
575 250 555	150	C1	16	8	1	2.21	17.64	1.58	27.88
915 730	150	C2	16	16	1	1.65	26.32	1.58	41.59
960		C3	16	12	1	0.96	11.52	1.58	18.20
								Sub-Total of1m (Safety Barrier Type - 2) =	87.7
								For 23.6m Length	2069.7

Government of Nepal
Ministry of Physical Infrastructure and Transport
Department of Roads
Project Directorate Office (ADB)
SASEC Highway Improvement Project-
Project Preparatory Consultant (SHIP-PPC)
ADB Loan No: 3722-NEP

CONSULTANT:
Soosung Engineering Co. Ltd,
Korea
in association with
ERMC P (Ltd)
and
TSE-Tech Studio of Engineeering
Nepal

IMPLEMENTING AGENCY:
DOR, DCID

ROAD NAME:
East West Highway (H01)
Butwal - Gorusinghe Section

SHEET TITLE:
Bar Bending Schedule
of
Dry Nala Box Bridge (5x6.75)
(46/H001/290_A,B)
CH-590+760

SCALE:
As Shown

	NAME	SIGNATURE	REV NO.	DESCRIPTION
Designed by:	P.Shrestha			
Checked by:	P. Upadhyaya			
Approved by:	Dr. T.H.Choi			

DATE: Nov,2022
DWG.NO.: 290_Dry Nala
SHEET NO.: 07/09

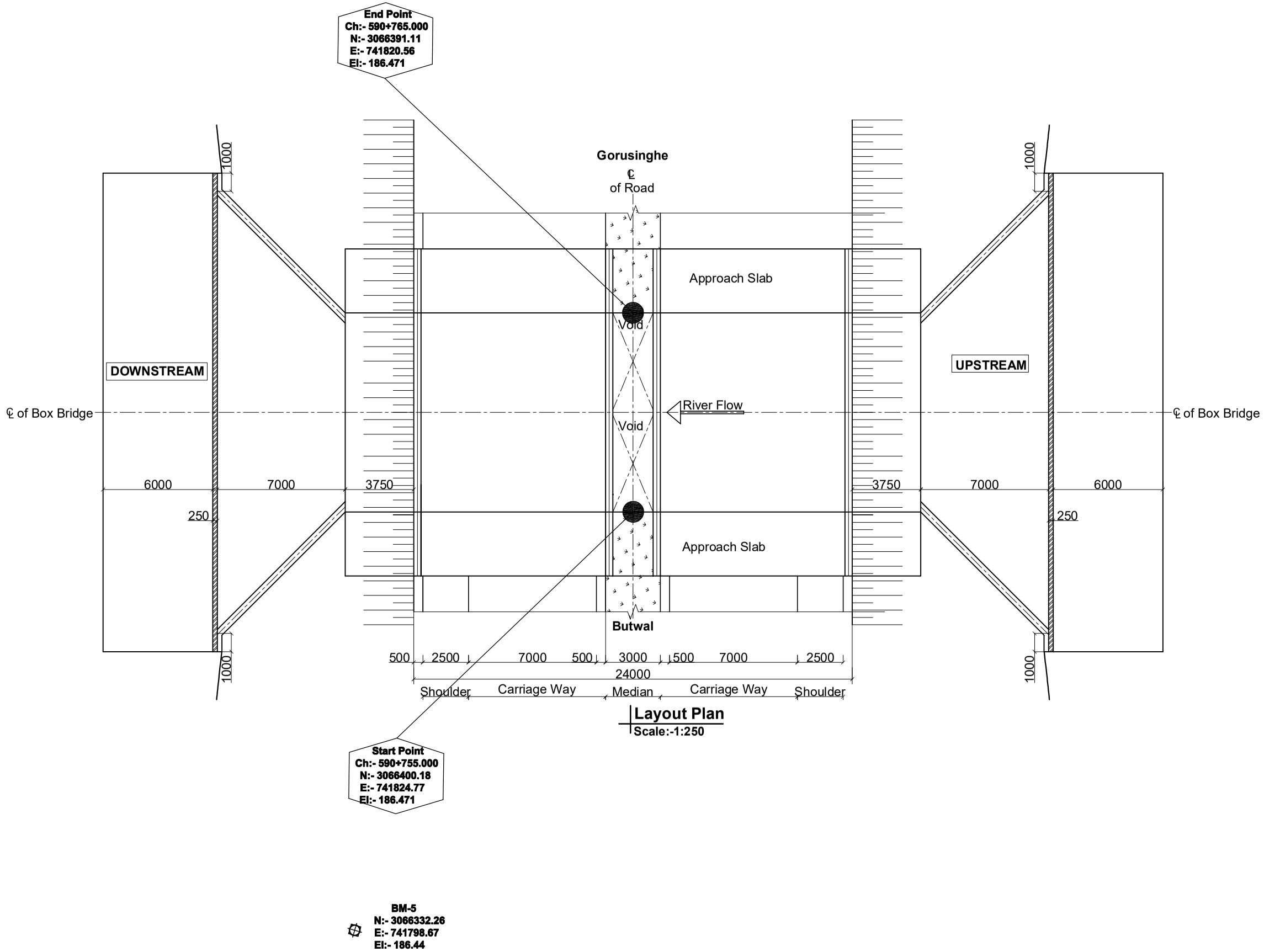

Government of Nepal Ministry of Physical Infrastructure and Transport **Department of Roads** **Project Directorate Office (ADB)** **SASEC Highway Improvement Project-** **Project Preparatory Consultant (SHIP-PPC)** **ADB Loan No: 3722-NEP**	**CONSULTANT:** Soosung Engineering Co. Ltd, Korea in association with ERMC P (Ltd) and TSE-Tech Studio of Engineeering Nepal	**IMPLEMENTING AGENCY:** **DOR, DCID** **ROAD NAME:** **East West Highway (H01)** **Butwal - Gorusinghe Section**	**SHEET TITLE:** Layout Plan of **Dry Nala Box Bridge (5x6.75)** (46/H001/290_A,B) CH-590+760	**SCALE:** As Shown		**NAME**	**SIGNATURE**	**REV NO.**	**DESCRIPTION**	**DATE:** Nov,2022
					Designed by:	P.Shrestha				**DWG.NO.:** 290_Dry Nala
					Checked by:	P. Upadhyaya				
					Approved by:	Dr. T.H.Choi				**SHEET NO.:** 08/09

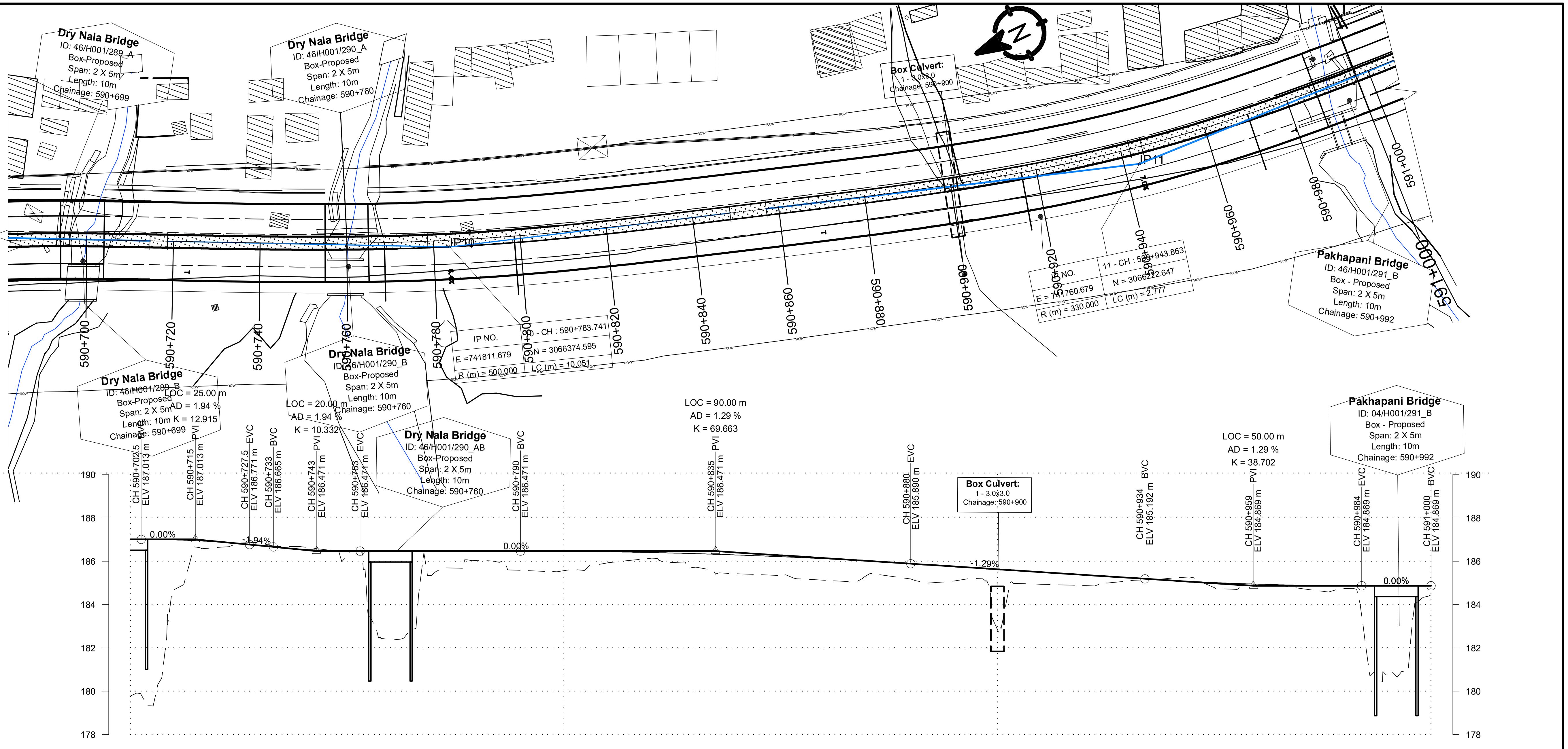

CHAINAGE(Km)	DESIGN LEVEL(m)	EXISTING LEVEL(m)
590+700	187.013	179.780
590+710	186.991	184.686
590+720	186.894	186.637
590+730	186.723	186.846
590+740	186.553	186.660
590+750	186.475	186.288
590+760	186.471	182.393
590+770	186.471	185.446
590+780	186.471	186.043
590+790	186.471	185.581
590+800	186.464	185.564
590+810	186.442	185.924
590+820	186.406	186.138
590+830	186.356	185.721
590+840	186.292	185.427
590+850	186.213	185.352
590+860	186.119	185.126
590+870	186.012	185.362
590+880	185.890	185.183
590+890	185.760	185.094
590+900	185.631	182.835
590+910	185.502	184.940
590+920	185.373	184.879
590+930	185.244	185.091
590+940	185.119	185.216
590+950	185.018	184.787
590+960	184.943	184.862
590+970	184.894	184.746
590+980	184.871	184.744
590+990	184.869	180.705
591+000	184.869	184.450

HORIZONTAL ALIGNMENT (RIGHT / LEFT): IP-9 R=200.00; IP-10 R=500.00; IP-11 R=330.00

SUPER ELEVATION: 590+700; T; 590+768.688; 6.44; 590+798.637; T; 590+916.536; 7; T; 590+970.426; 591+000

Government of Nepal
Ministry of Physical Infrastructure and Transport
Department of Roads
Project Directorate Office (ADB)
SASEC Highway Improvement Project-
Project Preparatory Consultant (SHIP-PPC)
ADB Loan No: 3722-NEP

CONSULTANT:
Soosung Engineering Co. Ltd, Korea in association with
ERMC P (Ltd), Nepal
and
TTE-Tech Studio of Engineeering

IMPLEMENTING AGENCY:
DOR, DCID

ROAD NAME:
East West Highway (H01)
Butwal - Gorusinghe Section

SHEET TITLE:
Plan And Profile
of
Dry Nala Box Bridge
CH:590+700 - CH:591+000

SCALE:
0 2 4 6m
Vertical Scale
0 10 20 30m
Horizontal Scale

	NAME	SIGNATURE	REV NO.	DESCRIPTION
DESIGNED BY:	S.B. Shrestha			
CHECKED BY:	P. Upadhyaya			
APPROVED BY:	Dr. T.H.Choi			

DATE: September, 2022
DWG.NO.: 290_Dry Nala
SHEET NO.: 09/09

Government of Nepal

Ministry of Physical Infrastructure and Transport

Department of Roads

Project Directorate (ADB)

Implementing Agency : DOR, DCID

Project Preparatory Consultants

Under

SASEC Highway Improvement Project (SHIP-PPC)

(ADB Loan No: 3722 Nep)

Contract No. SHIP/PPC/2020/02

Pakhapani Bridge(46-H001-291_AB)

St. Ch : 590+986.40 ~ End Ch : 590+997.60

Detailed Drawing

Butwal - Gorusinghe Sector

November,2022

CONTENTS

S.No.	DESCRIPTION	DWG. NO	NO. OF SHEETS
1.	General Notes.	1	1
2.	General Arrangement.	2	1
3.	Concrete Outline.	3	1
4.	Reinforcement Details.	4	1
5.	Typical Drawing of Wing Wall.	5	1
6.	Bar Bending Schedule.	6	1
7.	Layout Plan.	7	1
8.	Plan & Profile.	8-9	2

GENERAL NOTES

a) Bridge Design Specifications

IRC Standard Specifications and Code of Practice for Road Bridges - All Relevant Sections.

b) Bridge Design Method

Limit State method.

c) Live Load

IRC Class A and IRC Class 70R, Tracked and Wheeled vehicles. Load combinations are adopted as per IRC:6-2017, Section: II, Loads and Load Combinations.

Pedestrian Load: 4kN/m².

d) Concrete

Concrete Class for box, Approach Slab and Safety Kerb is M25.

e) Steel Reinforcement

Reinforcing Steel shall be HYSD bars of grade Fe 500 confirming to IS: 1786-2008.

f) Lap Length

Minimum Lap Length is 65xdiameter of steel reinforcement.

Laps shall be in staggered position.

Lapped bars more tha 50% shall not be allowed.

g) Clear covers

Top Slab

The clear cover to steel reinforcement is 40mm.

Side Wall and Base Slab

The clear cover to steel reinforcement steel is 75mm.

Approach Slab

The clear cover to steel reinforcement steel is 40mm.

Safety Kerb

The clear cover to steel reinforcement steel is 25mm.

h) All dimensions are in millimeters except otherwise mentioned.

Government of Nepal Ministry of Physical Infrastructure and Transport **Department of Roads** **Project Directorate Office (ADB)** **SASEC Highway Improvement Project-** **Project Preparatory Consultant (SHIP-PPC)** **ADB Loan No: 3722-NEP**	**CONSULTANT:** Soosung Engineering Co. Ltd, Korea in association with ERMC P (Ltd) and TTE-Tech Studio of Engineeering Nepal	**IMPLEMENTING AGENCY:** **DOR, DCID** **ROAD NAME:** **East West Highway (H01)** **Butwal - Gorusinghe Section**	**SHEET TITLE:** General Notes of **Pakhapani Box Bridge - (5x6.2)** (46/H001/291_A,B) CH-590+992	**SCALE:** As Shown		**NAME**	**SIGNATURE**	**REV NO.**	**DESCRIPTION**	**DATE:** Nov,2022 **DWG.NO.:** 291_Pakhapani **SHEET NO.:** 01/09
					Designed by:	P.Shrestha				
					Checked by:	P. Upadhyaya				
					Approved by:	Dr. T.H.Choi				

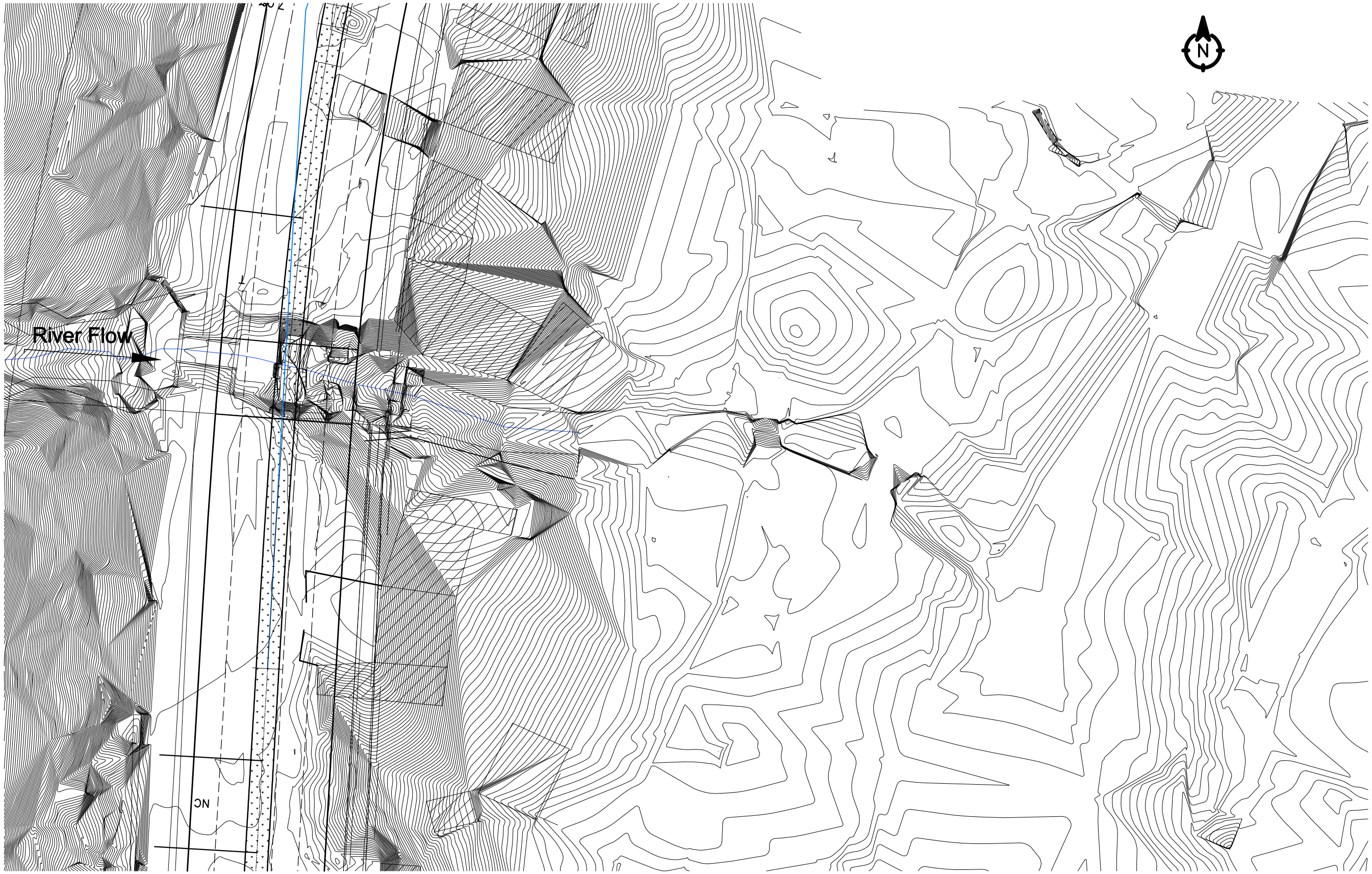

Government of Nepal Ministry of Physical Infrastructure and Transport **Department of Roads** **Project Directorate Office (ADB)** **SASEC Highway Improvement Project-** **Project Preparatory Consultant (SHIP-PPC)** **ADB Loan No: 3722-NEP**	**CONSULTANT:** Soosung Engineering Co. Ltd, Korea in association with ERMC P (Ltd) and TPE-Tech Studio of Engineeering Nepal	**IMPLEMENTING AGENCY:** **DOR, DCID** **ROAD NAME:** **East West Highway (H01)** **Butwal - Gorusinghe Section**	**SHEET TITLE:** Topographic Map of **Pakhapani Box Bridge - (5x6.2)** (46/H001/291_A,B) CH-590+992	**SCALE:** 2:1		**NAME**	**SIGNATURE**	**REV NO.**	**DESCRIPTION**	**DATE:** Nov,2022 **DWG.NO.:** 291_Pakhapani **SHEET NO.:** 02/09
					Designed by:	P.Shrestha				
					Checked by:	P. Upadhyaya				
					Approved by:	Dr. T.H.Choi				

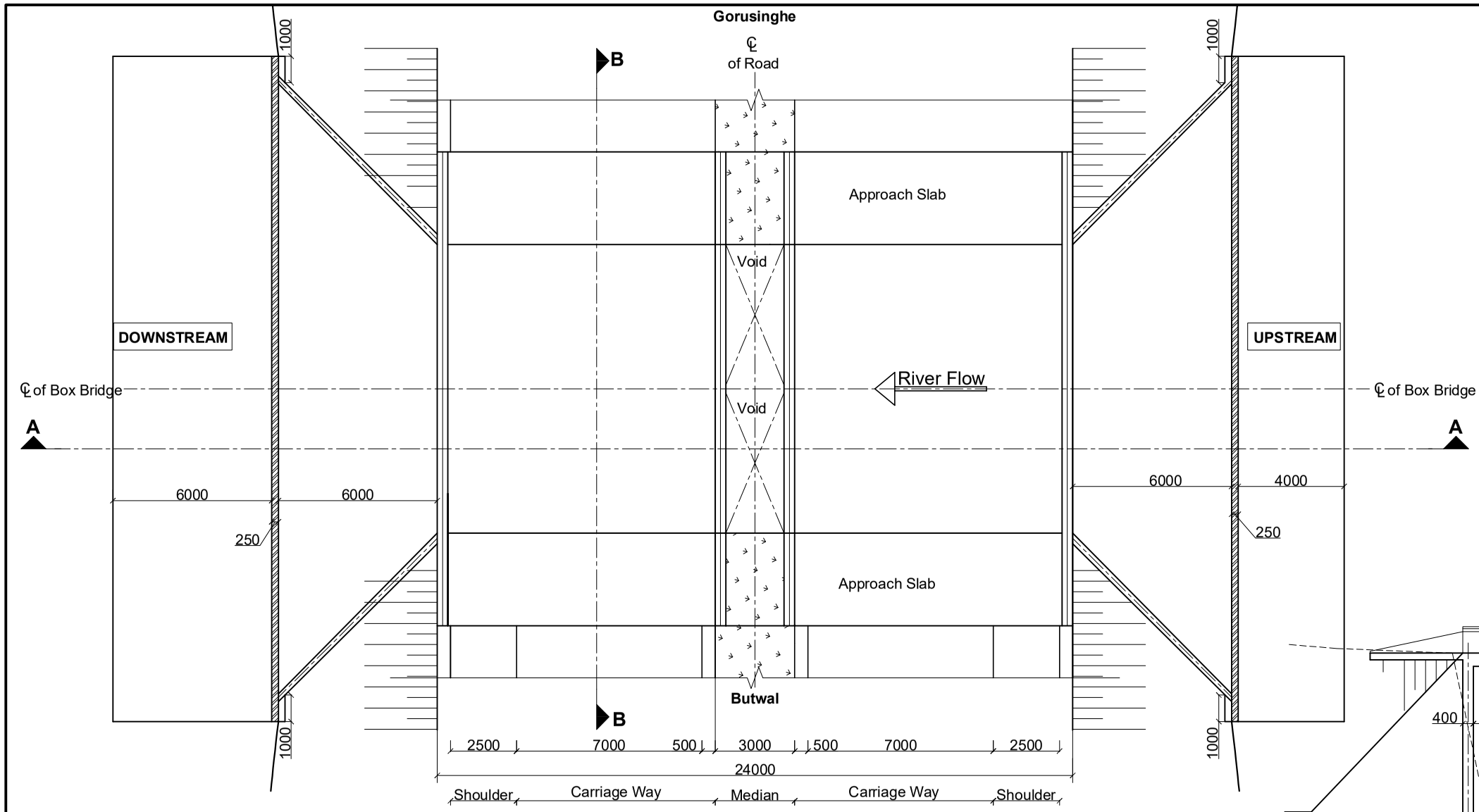

Plan
Scale:-1:200

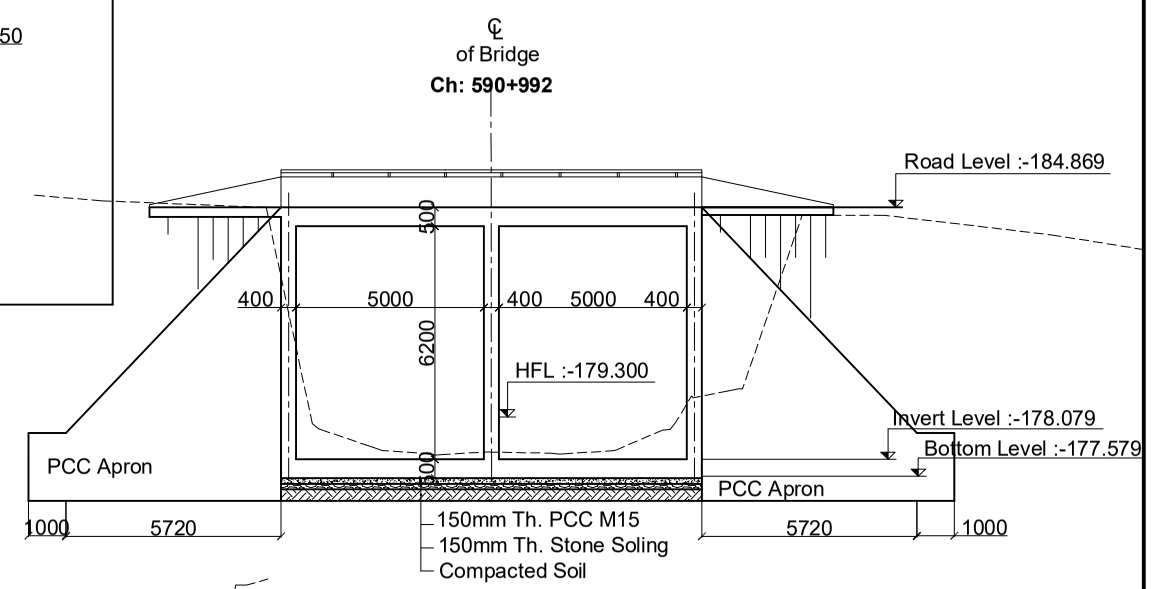

Section at B-B
Scale: 1:200

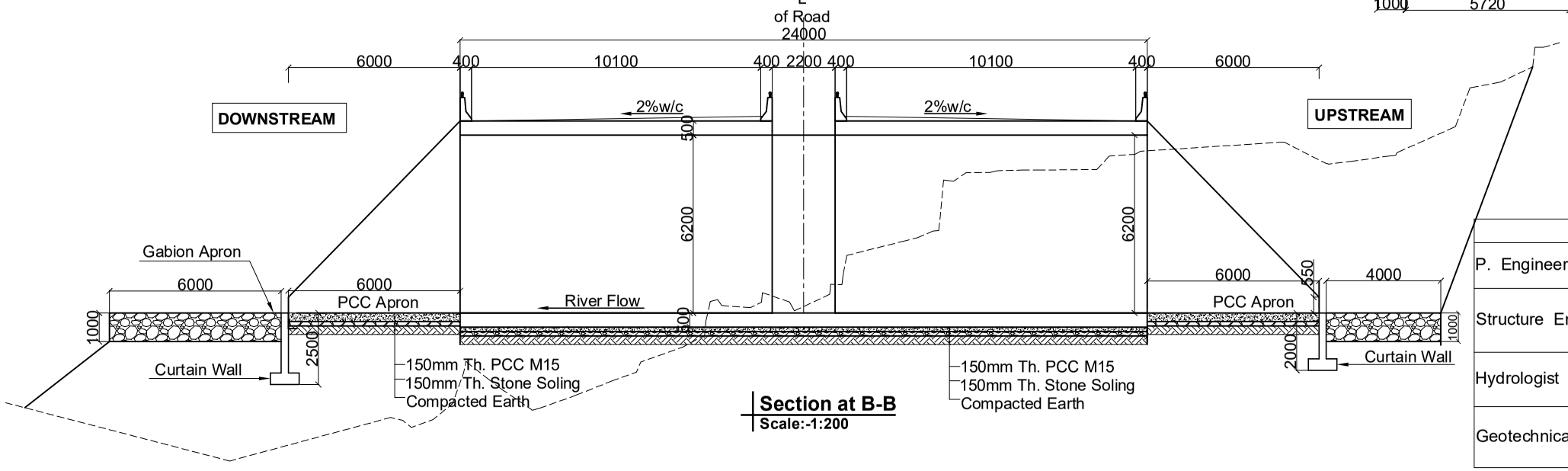

Section at B-B
Scale:-1:200

	Name(NMC Number)	Signature
P. Engineer	P. Upadhyaya (Civil A 675)	
Structure Engineer	K.P.Wagle(Civil A 127) / P.Shrestha(Civil A 676) / S.Bhattarai (Civil A 904)	
Hydrologist	Dr. P.C. Jha(Civil A 166) / S. Adhikari (Civil A 408)	
Geotechnical Engineer	A. Adhikari(ka 199) / Dr. V . R. S. Shahi	

Government of Nepal
Ministry of Physical Infrastructure and Transport
Department of Roads
Project Directorate Office (ADB)
SASEC Highway Improvement Project-
Project Preparatory Consultant (SHIP-PPC)
ADB Loan No: 3722-NEP

CONSULTANT:
Soosung Engineering Co. Ltd,
Korea
in association with
ERMC P (Ltd)
and
TSE-Tech Studio of Engineeering
Nepal

IMPLEMENTING AGENCY:
DOR, DCID

ROAD NAME:
East West Highway (H01)
Butwal - Gorusinghe Section

SHEET TITLE:
General Arrangement
of
Pakhapani Box Bridge - (5x6.2)
(46/H001/291_A,B)
CH-590+992

SCALE:
As Shown

	NAME	SIGNATURE	REV NO.	DESCRIPTION
Designed by:	P.Shrestha			
Checked by:	P. Upadhyaya			
Approved by:	Dr. T.H.Choi			

DATE: Nov,2022
DWG.NO.: 291_Pakhapani
SHEET NO.: 03/09

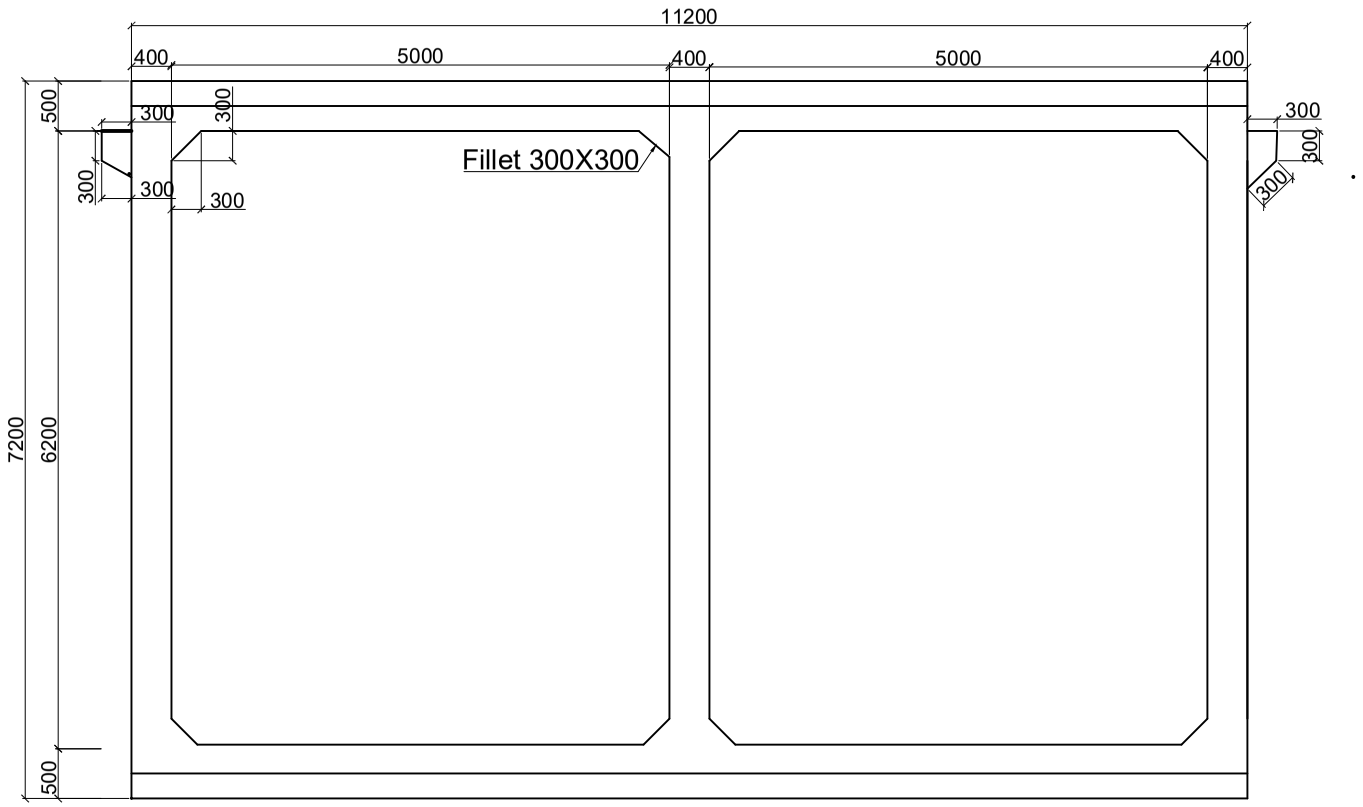

Concrete Outlines (Sectional Elevation)
Scale:-1:75

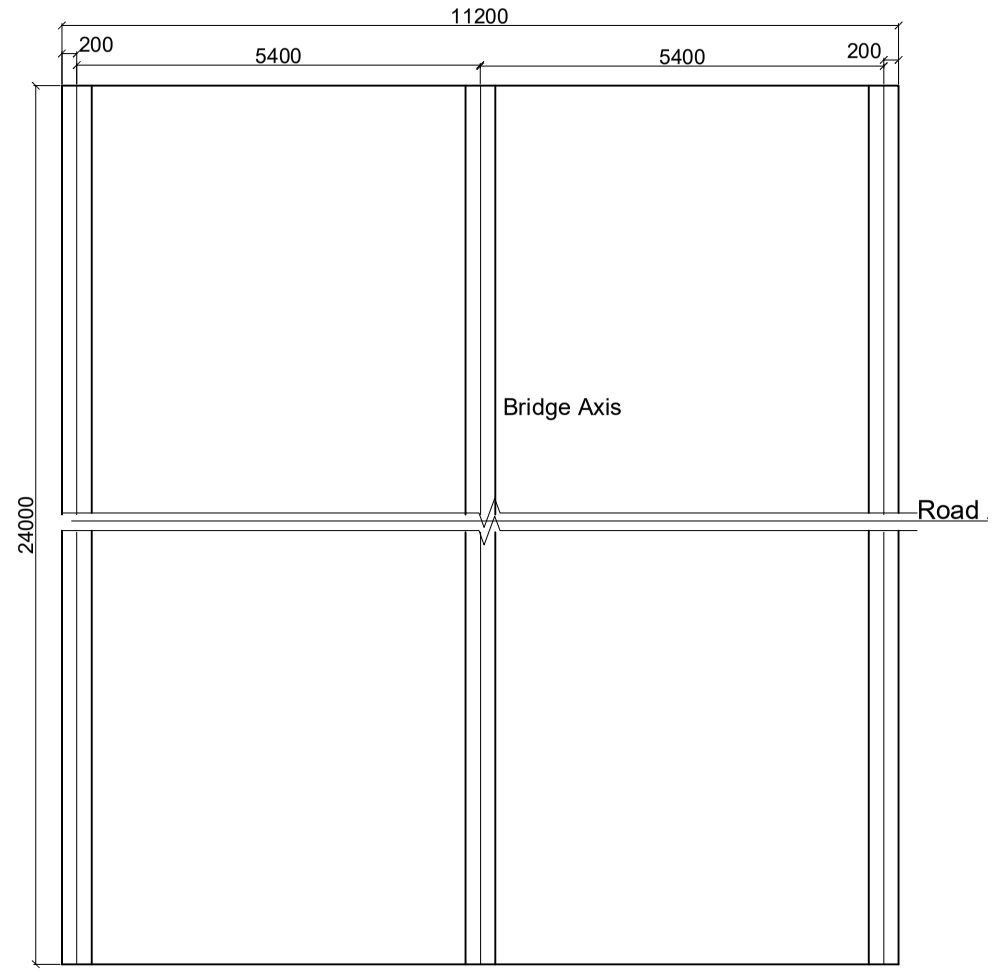

Concrete Outlines (Plan)
Scale:-1:100

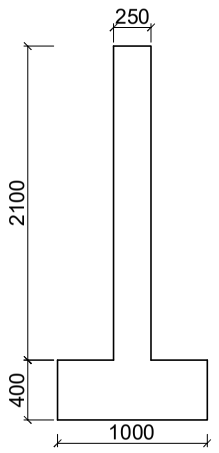

Curtain Wall D/S
Scale:-1:50

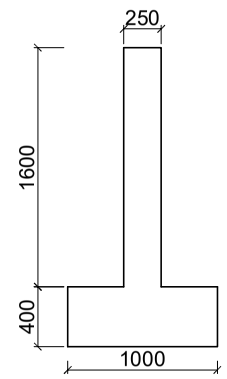

Curtain Wall U/S
Scale:-1:50

Government of Nepal Ministry of Physical Infrastructure and Transport **Department of Roads** **Project Directorate Office (ADB)** **SASEC Highway Improvement Project-** **Project Preparatory Consultant (SHIP-PPC)** **ADB Loan No: 3722-NEP**	**CONSULTANT:** Soosung Engineering Co. Ltd, Korea in association with ERMC P (Ltd) and TR-Tech Studio of Engineeering Nepal	**IMPLEMENTING AGENCY:** **DOR, DCID** **ROAD NAME:** **East West Highway (H01)** **Butwal - Gorusinghe Section**	**SHEET TITLE:** Concrete Outline of **Pakhapani Box Bridge - (5x6.2)** (46/H001/291_A,B) CH-590+992	**SCALE:** As Shown		**NAME**	**SIGNATURE**	**REV NO.**	**DESCRIPTION**	**DATE:** Nov,2022 **DWG.NO.:** 291_Pakhapani **SHEET NO.:** 04/09
					Designed by:	P.Shrestha				
					Checked by:	P. Upadhyaya				
					Approved by:	Dr. T.H.Choi				

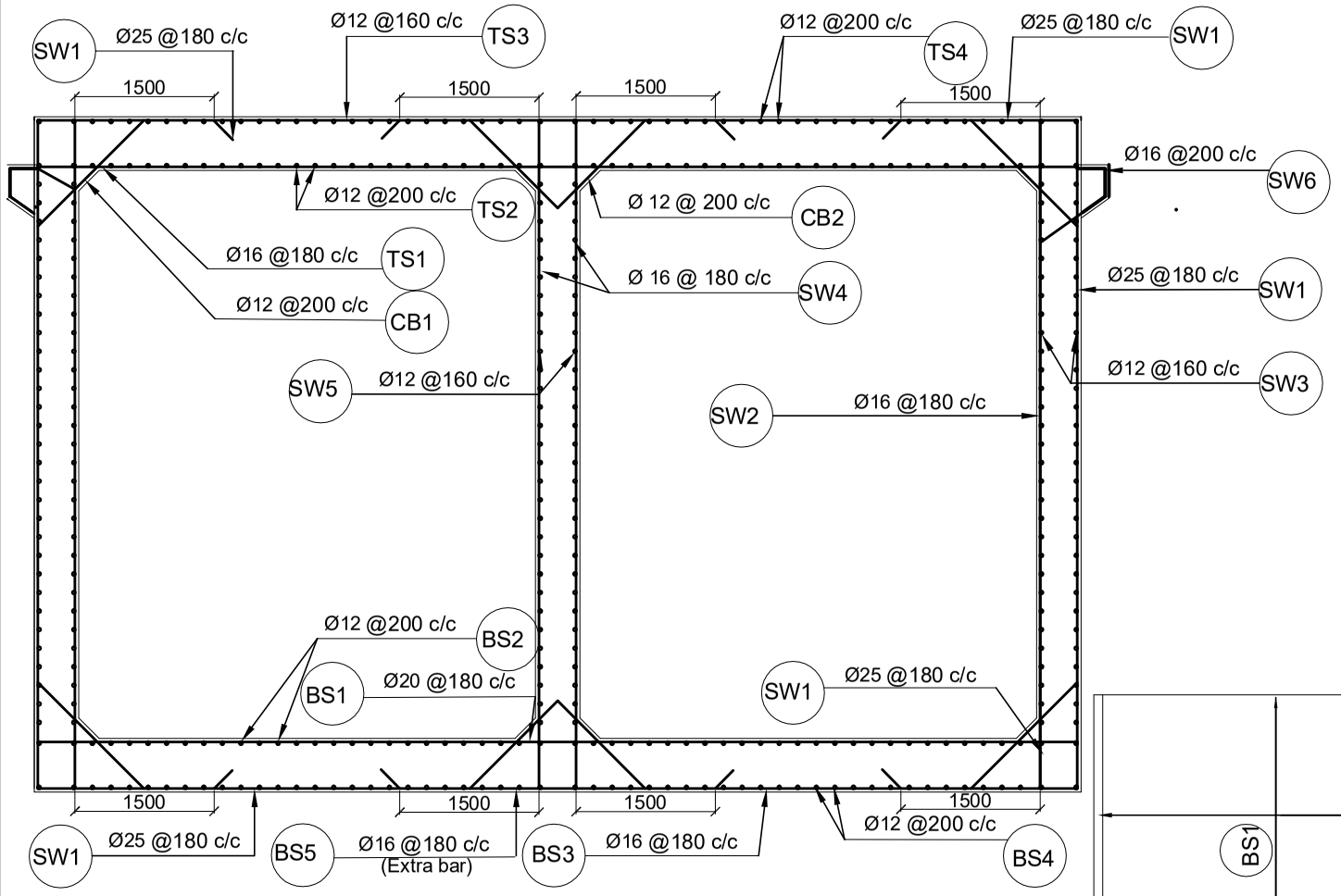

Sectional Elevation
Scale:-1:75

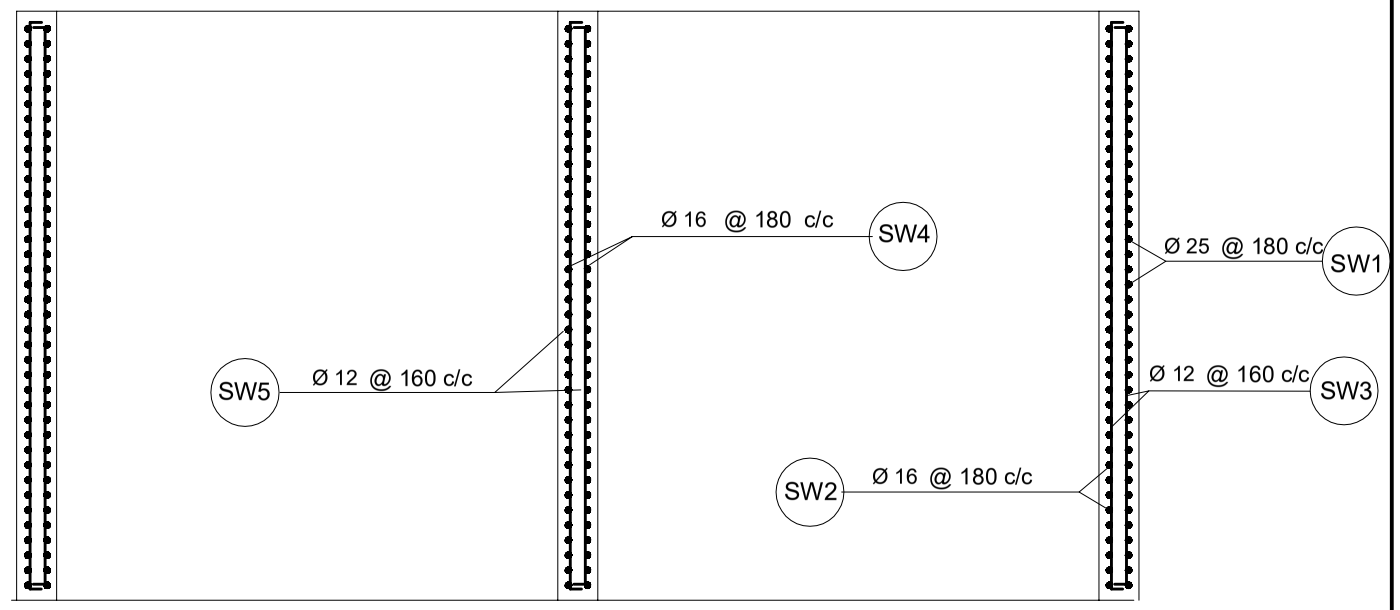

Sectional Plan of Vertical Wall
Scale:-1:75

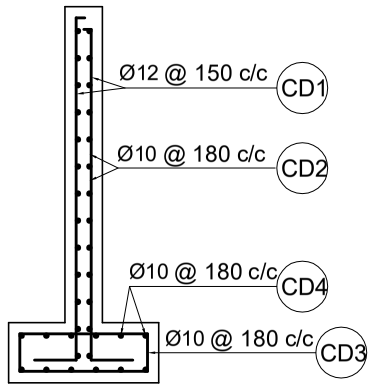

Downstream
Scale:-1:50

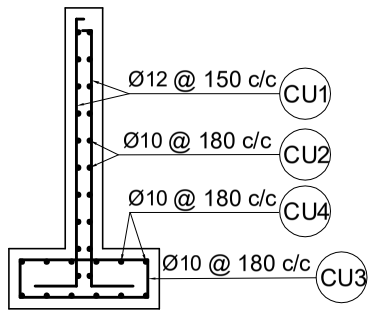

Upstream
Scale:-1:50

CURTAIN WALLS
Scale:-1:50

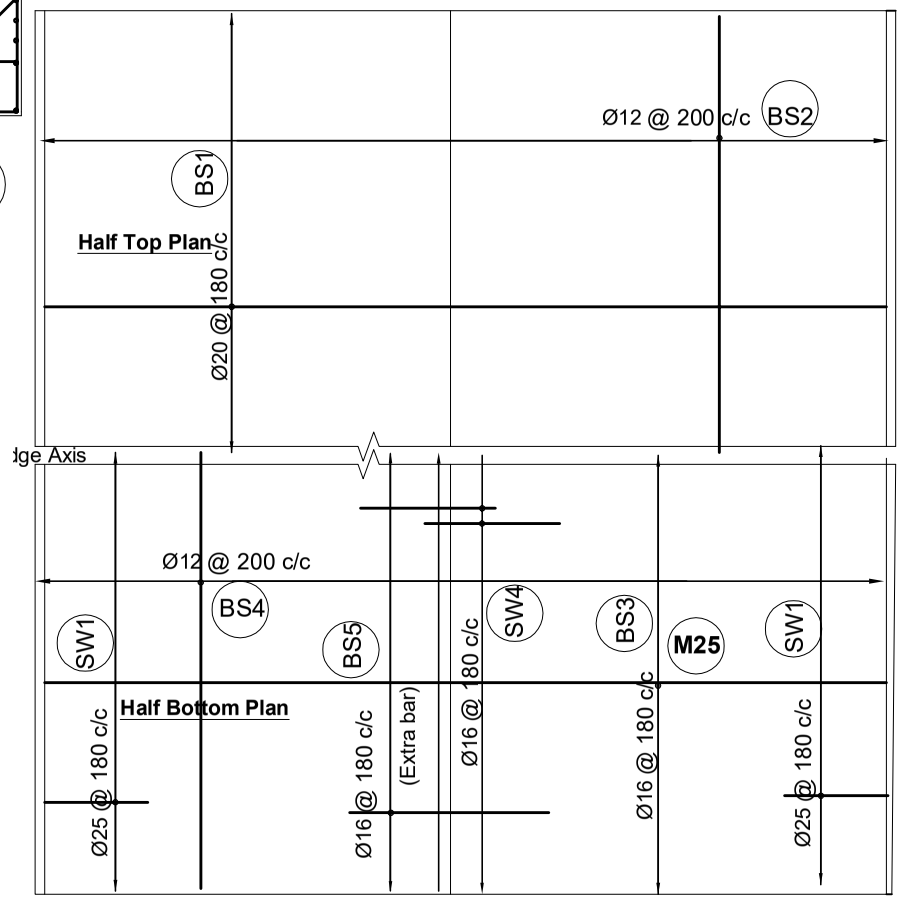

Bottom Sectional Plan
Scale:-1:100

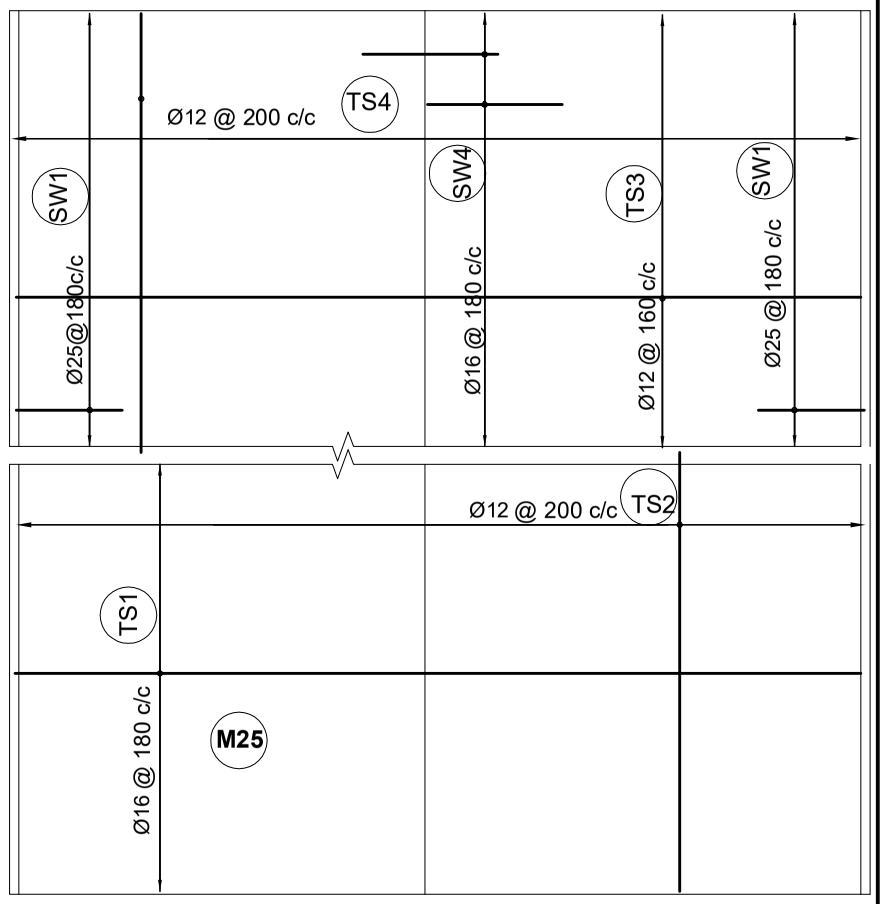

Top Sectional Plan
Scale:-1:100

Government of Nepal Ministry of Physical Infrastructure and Transport **Department of Roads** **Project Directorate Office (ADB)** **SASEC Highway Improvement Project-** **Project Preparatory Consultant (SHIP-PPC)** **ADB Loan No: 3722-NEP**	**CONSULTANT:** Soosung Engineering Co. Ltd, Korea in association with ERMC P (Ltd) and TTE-Tech Studio of Engineeering Nepal	**IMPLEMENTING AGENCY:** **DOR, DCID** **ROAD NAME:** **East West Highway (H01)** **Butwal - Gorusinghe Section**	**SHEET TITLE:** Reinforcement Details of **Pakhapani Box Bridge - (5x6.2)** (46/H001/291_A,B) CH-590+992	**SCALE:** As Shown		**NAME**	**SIGNATURE**	**REV NO.**	**DESCRIPTION**	**DATE:** Nov,2022 **DWG.NO.:** 291_Pakhapani **SHEET NO.:** 05/09
					Designed by:	P.Shrestha				
					Checked by:	P. Upadhyaya				
					Approved by:	Dr. T.H.Choi				

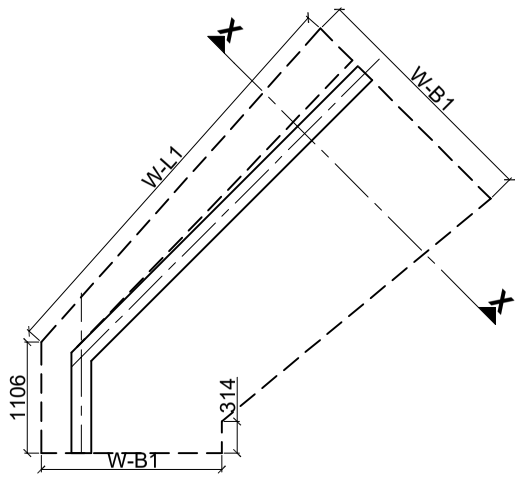

Wing Wall Plan
Scale:-1:75

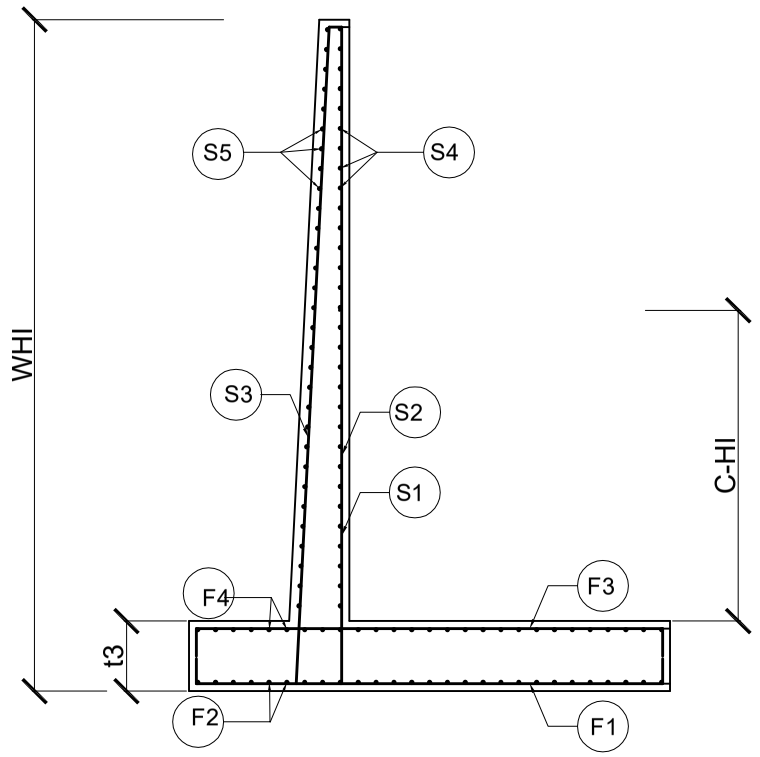

Section at X -X
Scale:-1:75

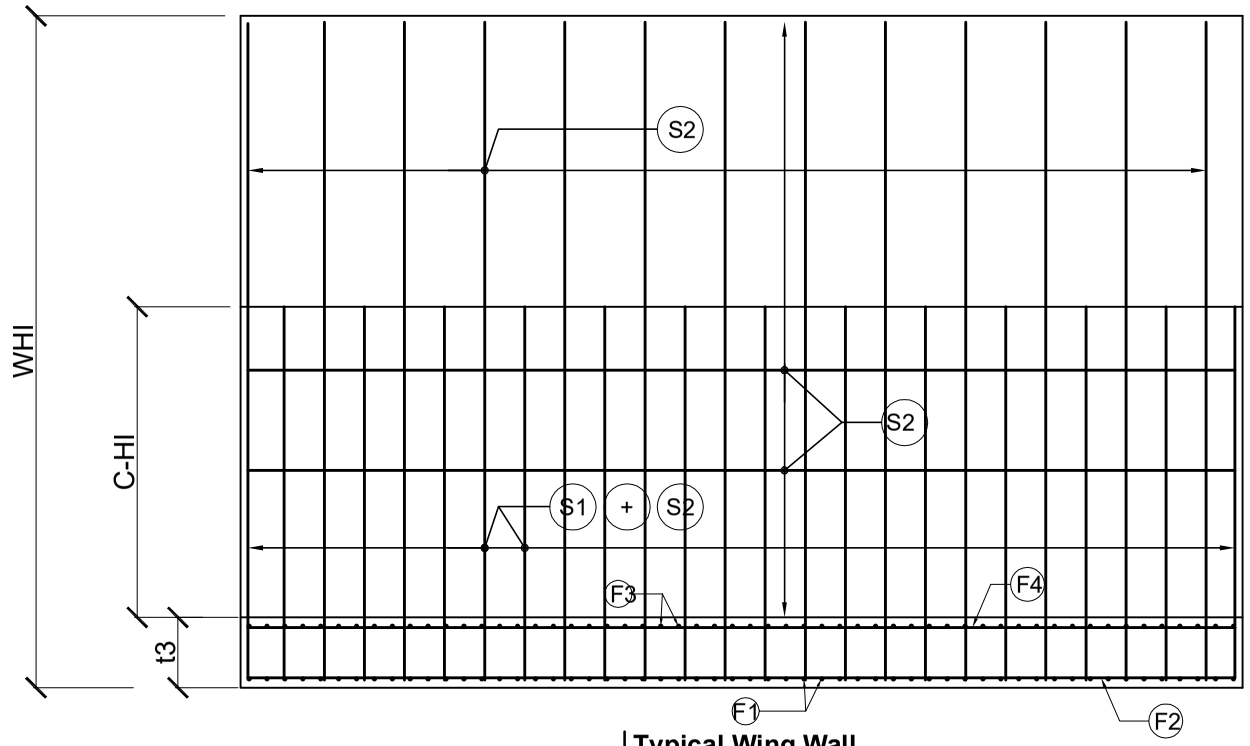

Typical Wing Wall
Scale:-1:75

S.No.	W-H1(m)	W-L1 Length	W-B1	W-B2	t1	t2	t3	x	y
1.	2.00	4300	1800	1800	200	200	200	300	1300
2.	2.50	4300	2200	1800	200	240	200	300	1660
3.	3.00	4300	2400	1800	200	280	250	450	1670
4.	3.50	500	2800	1800	200	300	250	450	2050
5.	4.00	5700	3200	1800	250	350	300	500	2350
6.	4.50	6000	3500	1800	250	400	350	500	2600
7.	5.00	6500	4000	1800	300	500	500	800	2700
8.	6.00	7000	4800	1800	300	600	700	1000	3200

REINFORCEMENT DETAIL OF WING WALL

HEIGHT W-H1	Curtailment Height C-H1	F1		F2		F3		F4		S1		S2		S3		S4		S5		Remarks
		Diameter	Spacing	Diameter	Spacing	Diameter	Spacing	Diameter	Spacing	Diameter	Spacing	Diameter	Spacing	Diameter	Spacing	Diameter	Spacing	Diameter	Spacing	
m	m	mm	mm	mm	mm	mm	mm	mm	mm	mm	mm	mm	mm	mm	mm	mm	mm	mm	mm	
2.0		8	230	8	230	12	200	8	230	12	100			10	200	8	230	8	230	
2.5		8	230	8	230	12	160	8	230	16	160			10	160	8	230	8	230	
3.0	1.60	10	230	8	230	12	140	8	230	12	180	12	180	10	180	8	230	8	230	
3.5	1.55	10	230	8	230	16	160	10	230	16	200	16	200	12	200	8	230	8	230	
4.0	1.65	10	230	10	300	16	150	10	230	16	200	16	200	12	200	10	230	10	230	
4.5	2.10	10	230	10	300	16	140	10	230	16	200	16	200	12	150	10	230	10	230	
5.0	2.45	12	220	10	250	12	150	10	250	16	180	16	180	12	160	10	230	10	230	
6.0	3.10	12	180	10	180	12	150	10	180	20	200	20	200	12	120	10	160	10	160	

Government of Nepal Ministry of Physical Infrastructure and Transport **Department of Roads** **Project Directorate Office (ADB)** **SASEC Highway Improvement Project-** **Project Preparatory Consultant (SHIP-PPC)** **ADB Loan No: 3722-NEP**	**CONSULTANT:** Soosung Engineering Co. Ltd, Korea in association with ERMC P (Ltd) and TIE-Tech Studio of Engineeering Nepal	**IMPLEMENTING AGENCY:** **DOR, DCID** **ROAD NAME:** **East West Highway (H01)** **Butwal - Gorusinghe Section**	**SHEET TITLE:** Typical Drawing of Wing Wall of **Pakhapani Box Bridge - (5x6.2)** (46/H001/291_A,B) CH-590+992	**SCALE:** As Shown		**NAME**	**SIGNATURE**	**REV NO.**	**DESCRIPTION**	**DATE:** Nov,2022 **DWG.NO.:** 291_Pakhapani **SHEET NO.:** 06/09
					Designed by:	P.Shrestha				
					Checked by:	P. Upadhyaya				
					Approved by:	Dr. T.H.Choi				

Bar Bending Schedule of Top Slab

Sketch	Spacing (mm)	Bar Mark	Ø, mm	No	Lot	Length, m	Total Length, m	Weight Kg/m	Total wt. Kg
Top Slab									
100 11120 100	180	TS1	16	118	1	11.32	1335.76	1.58	2110.83
100 10420 100	200	TS2	12	114	1	10.62	1210.68	0.89	1076.16
100 11120 100	160	TS3	12	134	1	11.32	1516.88	0.89	1348.34
100 10420 100	200	TS4	12	114	1	10.62	1210.68	0.89	1076.16
50 3400 50	300	TS5	12	72	1	3.50	252.00	0.89	224.00
							Sub-Total (Top Slab) =		5835.5
Base Slab									
100 11050 100	180	BS1	20	134	1	11.25	1507.50	2.47	3722.22
100 23850 100	200	BS2	12	57	1	24.05	1370.85	0.89	1218.53
100 11050 100	180	BS3	16	134	1	11.25	1507.50	1.58	2382.22
100 23850 100	200	BS4	12	57	1	24.05	1370.85	0.89	1218.53
50 3400 50	180	BS5	16	268	1	3.50	938.00	1.58	1482.27
									0.0
							Sub-Total (Base Slab) =		10023.8

Bar Bending Schedule of Wing Wall

Sketch	Spacing (mm)	Bar Mark	Ø, mm	No	Lot	Length, m	Total Length, m	Weight Kg/m	Total wt. Kg
1440 to 4190 / 900	200	S1	20	48	1	3.71	178.08	2.47	439.70
100 / 2290 to 7790 / 900	200	S2	20	48	1	6.04	289.92	2.47	715.85
100 / 2290 to 7790 / 900	120	S3	12	80	1	6.04	483.20	0.89	429.51
9450	160	S4	10	33	1	9.45	311.85	0.62	192.50
9450	160	S5	10	33	1	9.45	311.85	0.62	192.50
100 1690 to4690 100	180	F1	12	54	1	3.39	183.06	0.89	162.72
9450	180	F2	10	19	1	9.45	179.55	0.62	110.83
100 1690 to4690 100	150	F3	12	64	1	3.39	216.96	0.89	192.85
9450	180	F4	10	19	1	9.45	179.55	0.62	110.83
9450		F5	10	6	1	9.45	56.70	0.62	35.00
							Sub-Total (Base Slab) =		2582.3

Bar Bending Schedule of Curtain Walls

Sketch	Spacing (mm)	Bar Mark	Ø, mm	No	Lot	Length, m	Total Length, m	Weight Kg/m	Total wt. Kg
Downstream									
300 2350	150	CD1	12	320	1	2.65	848.00	0.89	753.78
100 23850	180	CD2	10	15	1	47.90	718.50	0.62	443.52
850 250	180	CD3	10	134	1	2.20	294.80	0.62	181.98
23850	180	CD4	10	12	1	23.85	286.20	0.62	176.67
							Sub-Total (Downstream) =		1555.9
Upstream									
300 1850	150	CU1	12	320	1	2.15	688.00	0.89	611.56
100 23850	180	CU2	10	12	1	47.90	574.80	0.62	354.81
850 250	180	CU3	10	134	1	2.20	294.80	0.62	181.98
23850	180	CU4	10	12	1	23.85	286.20	0.62	176.67
							Sub-Total (Upstream) =		1325.0

Bar Bending Schedule of Side Walls

Sketch	spacing (mm)	Bar Mark	Ø, mm	No	Lot	Length, m	Total Length, m	Weight Kg/m	Total wt. Kg
7085 1875 1875	180	SW1	25	268	1	10.84	2903.78	3.86	11202.85
7085 150 150	180	SW2	16	268	1	7.39	1979.18	1.58	3127.59
300 23850 300	160	SW3	12	78	1	48.30	3767.40	0.89	3348.80
7085 1875 1875	180	SW4	16	268	1	10.84	2903.78	1.58	4588.69
300 23850 300	160	SW5	12	39	1	48.30	1883.70	0.89	1674.40
200 550 300 778	200	SW6	16	242	1	1.83	442.38	1.58	699.06
1535	200	CB 1	12	484	1	1.54	742.94	0.89	660.39
1535 1535	200	CB 2	12	148	1	3.07	454.36	0.89	403.88
							Sub-Total (Side Walls) =		25705.7

Bar Bending Schedule of Approach Slab

Sketch	Spacing (mm)	Bar Mark	Ø, mm	No	Lot	Length, m	Total Length, m	Weight Kg/m	Total wt. Kg
100 3400 100	150	AS1	12	161	2	3.60	1159.20	0.89	1030.40
100 23900 100	150	AS2	12	24	2	24.10	1172.87	0.89	1042.55
100 3400 100	150	AS3	12	161	2	3.60	1159.20	0.89	1030.40
100 23900 100	150	AS4	12	24	2	24.10	1172.87	0.89	1042.55
							Sub-Total (Approach Slab) =		4145.9

Bar Bending Schedule of Safety Barrier Type - 1

Sketch	Spacing (mm)	Bar Mark	Ø, mm	No	Lot	Length, m	Total Length, m	Weight Kg/m	Total wt. Kg
575 928 225 304	125	C1	16	81	1	2.03	164.59	1.58	260.10
915 500	125	C2	16	81	1	1.42	114.62	1.58	181.12
9960		C3	16	11	1	9.96	109.56	1.58	173.13
							Sub-Total of 10m (Safety Barrier Type - 1) =		614.3
							`For 81.2m Length		4988.1

Bar Bending Schedule of Safety Barrier Type - 2

Sketch	Spacing (mm)	Bar Mark	Ø, mm	No	Lot	Length, m	Total Length, m	Weight Kg/m	Total wt. Kg
575 250 555	150	C1	16	8	1	2.21	17.64	1.58	27.88
915 730	150	C2	16	16	1	1.65	26.32	1.58	41.59
960		C3	16	12	1	0.96	11.52	1.58	18.20
							Sub-Total of 1m (Safety Barrier Type - 2) =		87.7
							For 22.4m Length		1964.5

Government of Nepal Ministry of Physical Infrastructure and Transport **Department of Roads** **Project Directorate Office (ADB)** **SASEC Highway Improvement Project-** **Project Preparatory Consultant (SHIP-PPC)** **ADB Loan No: 3722-NEP**	**CONSULTANT:** Soosung Engineering Co. Ltd, Korea in association with ERMC P (Ltd) and TPE-Tech Studio of Engineeering Nepal	**IMPLEMENTING AGENCY:** **DOR, DCID** **ROAD NAME:** **East West Highway (H01)** **Butwal - Gorusinghe Section**	**SHEET TITLE:** Bar Bending Schedule of **Pakhapani Box Bridge - (5x6.2)** (46/H001/291_A,B) CH-590+992	**SCALE:** As Shown		**NAME**	**SIGNATURE**	**REV NO.**	**DESCRIPTION**	**DATE:** Nov,2022 **DWG.NO.:** 291_Pakhapani **SHEET NO.:** 07/09
					Designed by:	P.Shrestha				
					Checked by:	P. Upadhyaya				
					Approved by:	Dr. T.H.Choi				

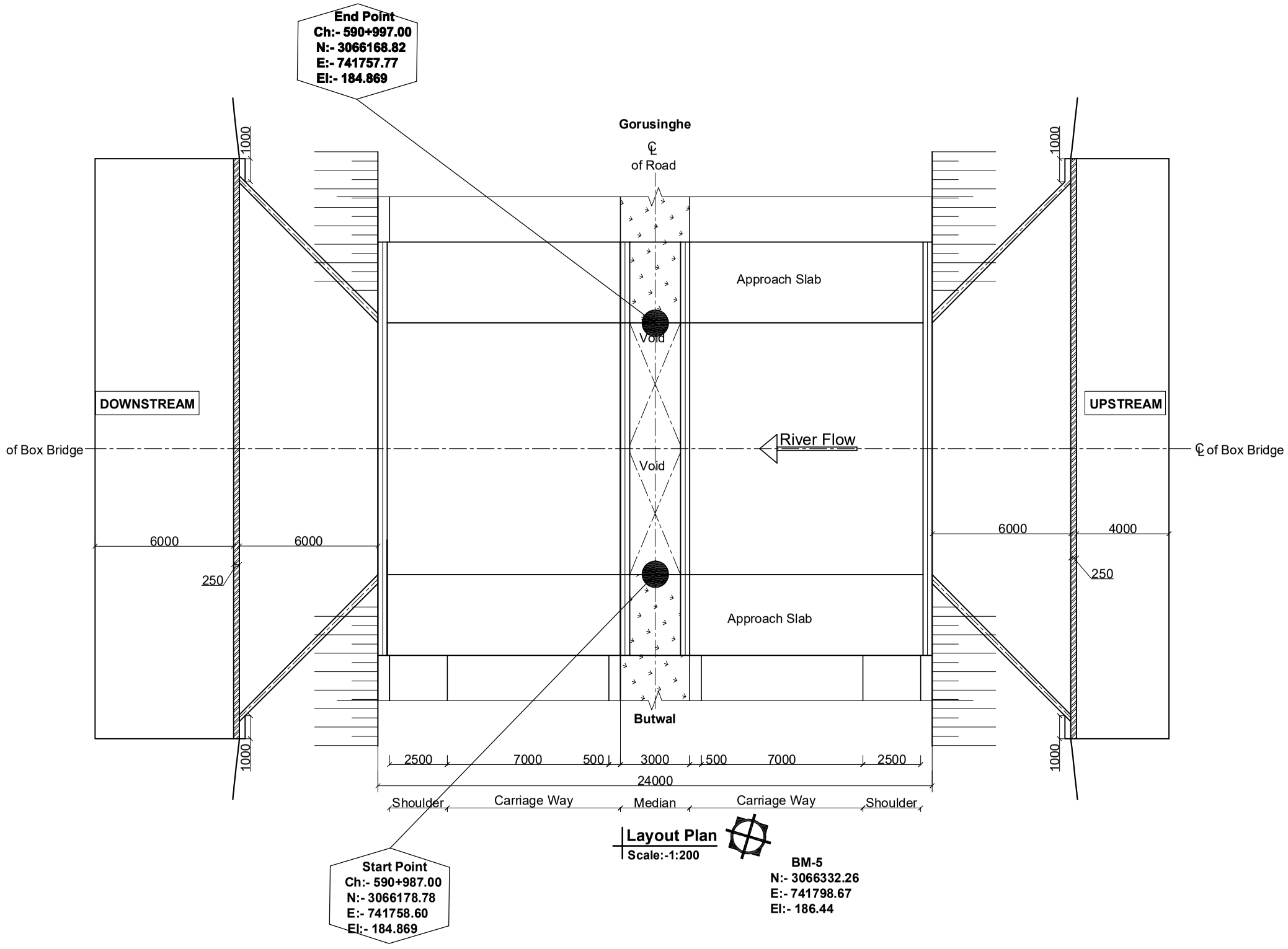

Note:-
BM Not Seen In Scale.

Government of Nepal Ministry of Physical Infrastructure and Transport **Department of Roads** **Project Directorate Office (ADB)** **SASEC Highway Improvement Project-** **Project Preparatory Consultant (SHIP-PPC)** **ADB Loan No: 3722-NEP**	**CONSULTANT:** Soosung Engineering Co. Ltd, Korea in association with ERMC P (Ltd) and TSE-Tech Studio of Engineeering Nepal	**IMPLEMENTING AGENCY:** **DOR, DCID** **ROAD NAME:** **East West Highway (H01)** **Butwal - Gorusinghe Section**	**SHEET TITLE:** General Arrangement of **Pakhapani Box Bridge - (5x6.2)** (46/H001/291_A,B) CH-590+992	**SCALE:** As Shown		**NAME**	**SIGNATURE**	**REV NO.**	**DESCRIPTION**	**DATE:** Nov,2022 **DWG.NO.:** 291_Pakhapani **SHEET NO.:** 08/09
					Designed by:	P.Shrestha				
					Checked by:	P. Upadhyaya				
					Approved by:	Dr. T.H.Choi				