# THE KATHMANDU POST

WITHOUT FEAR OR FAVOUR

epal's largest selling English daily
inted simultaneously in Kathmandu, Biratnagar, Bharatpur and Nepalgunj

Vol XXIX No. 217 | 10 pages | Rs.5
Thursday, September 23, 2021 | 07-06-2078

34.3° C 12.5° C


Government of Nepal
**Ministry of Physical Infrastructure & Transport**
**Department of Roads**
## Development Cooperation Implementation Division
**Strategic Road Connectivity and Trade Improvement Project**
Jwagal, Lalitpur

## Notice of Request for Bids Notice No.: SRCTIP/4/078-79

**Date of Publication: September 23, 2021**

The Department of Roads, Development Cooperation Implementation Division, Strategic Road Connectivity and Trade Improvement Project now invites sealed Bids from the prequalified eligible Applicants for following two lot nos. and contract identification number. The bids for lots and their combination shall be considered only from bidders that are prequalified and identified under respective lots. The details of the prequalified applicants for Lot-1, Lot-2 and both Lots 1 and 2 are provided in the DoR website: http://www.dor.gov.np/home/notices and Public Procurement Monitoring Office website **http://bolpatra.gov.np.**

| Package No. | Lot No. and Contract Identification No. | Contract Description | Cost of Bid Documents | Bid Security Amount | Last Date of Bid Submission |
|---|---|---|---|---|---|
| 1 | Lot-1: SRCTIP-DOR-W-NNM-ICB-1 | Improvement of Nagdunga-Naubise section (12.62 Km) of Tribhuvan Highway | NPR 20,000 | NPR 41,500,000 or USD 348,500 | 11 November, 2021 and time 12:00 hours Nepal Standard Time |
| | Lot-2: SRCTIP-DOR-W-NNM-ICB-2 | Improvement of Naubise - Malekhu section (43.542 Km) of Prithvi Highway | NPR 20,000 | NPR 158,500,000 or USD 1,331,000 | |

Interested Prequalified Eligible applicants are requested to visit DoR website: http://www.dor.gov.np/home/notices, Public Procurement Monitoring Office website http://bolpatra.gov.np and Request for Bid Documents for further detail notice and information.

**Project Director**

# Notice of Request for Bids

# Request for Bids
# Works
## (After Prequalification)

**Employer:** Department of Roads, Development Cooperation Implementation Division, Strategic Road Connectiviy and Trade Improvement Project

**Project:** Strategic Road Connectiviy and Trade Improvement Project

**Contract title: i)** *Improvement of Nagdhunga-Naubise-Mugling Road and Bridges [CH: 0+000 to CH: 12+260, Tribhuvan Highway]*

*ii) Improvement of Nagdhunga-Naubise-Mugling Road and Bridges [CH: 0+000 to CH: 43+540 Km, Prithvi Highway]*

**Country:** Nepal

**Credit No.: 6673-NP**

**RFB Nos: (i)** SRCTIP-DOR-W-NNM-ICB-1; and (ii) SRCTIP-DOR-W-NNM-ICB-2

**Issued on:** *23 September 2021*

1. The Government of Nepal, Ministry of Physical Infrastructure and Transport, Department of Roads has received financing from the World Bank toward the cost of the the Strategic Road Connectivity and Trade Improvement Project, and intends to apply part of the proceeds toward payments under the contracts for Improvement/Construction of following Works:

| Package No. | Lot No. and Contract Identification No. | Contract Description | Cost of Bid Documents | Bid Security Amount |
|---|---|---|---|---|
| 1 | Lot-1: SRCTIP-DOR-W-NNM-ICB-1 | Improvement of Nagdunga-Naubise section (12.62 Km) of Tribhuvan Highway | NPR 20,000.00 | NPR 41,500,000.00 or USD 348,500.00 |
| | Lot-2: SRCTIP-DOR-W-NNM-ICB-2 | Improvement of Naubise-Malekhu section (43.542 Km) of Prithvi Highway | NPR 20,000.00 | NPR 158,500,000.00 or USD 1,331,000.00 |

2. The Department of Roads, Development Cooperation Implementation Division, Strategic Road Connectivity and Trade Improvement Project now invites sealed Bids from the following prequalified eligible Applicants for Improvement of Nagdhunga-Naubise Section of the Tribhuvan Highway [Km 0+000 to Km 12+260] and (ii) Improvement of Naubise-Malekhu Section of the Prithvi Highway [Km 0+000 to Km 43+542]. The bids for lots and

Project Director

their combination shall be considered only from bidders that are prequalified and identified under respective lots as per paragraphs 2(a), 2 (b) and 2 (c) below. All other bids shall be rejected. A bidder prequalified for individual lots 1 and 2 but not for combination of both lots, if determined successful for both the lots individually, the Employer will decide which of the two lots will be awarded to the bidder based on the total lowest evaluated cost to the Employer for the Package comprising of both lots.The works mainly consists of widening of existing carriageway existing road to standard two- lane road with 4 lanes at built-up area with asphalt concrete pavement, constructing climbing/passing lanes at selected locations, construction of two lane bridges, extension of existing pipe and slab culverts, construction of retaining walls and drain. The total contract duration will be (i) 2 years for ICB-1 and 3 years for ICB-2 for construction/ improvement under Phase 1 followed by 5 years of Performance Based Maintenance period under Phase 2 (including DNP of Phase 1). The margin of preference shall apply and will be 7.5%.

a. **Prequalified Applicants for Lot-1**: SRCTIP-DOR-W-NNM-ICB-1

1. Niraj Cement Structurals Ltd., India
2. Jiangsu Provincial Transportation Engineering Group Co. Ltd., China
3. Kumar - GGHB - BBNS JV, Nepal
4. Ashish Nirman Sewa Pvt. Ltd., Nepal
5. Simplex- Rautaha - Khani JV, Kathmandu,Nepal
6. China Gezhouba Group Company Limited, China
7. China Civil Engineering Construction Corporation, China
8. VRSIPL- Hanuman- DS JV, Nepal
9. Sharma & Company Pvt. Ltd., Nepal
10. China International Water & Electric Corporation, China
11. Kalika - Vedanshee JV, Nepal
12. Lama - P.S. - Golden JV, Nepal
13. China Overseas Engineering Group Co., Ltd., China
14. Sichuan Road and Bridge Construction (Group) Co., Ltd, China
15. Poly Changda Engineering Co., Ltd, China
16. Dineshchandra R. Agrawal Infracon Pvt. Ltd., Gujrat, India
17. China Harbour Engineering Company Ltd, China
18. HICC & Amar Construction JV, Kathmandu, Nepal
19. Sanghai Construction Group Co. Ltd., China
20. GYC-Tundi Joint Venture, Lalitpur, Nepal
21. Zhejiang Teams International Economic & Technical Cooepration Co., Ltd., China
22. Zhejiang Communications Construction Group Co., Ltd, China
23. Hebei Construction Group Co. Ltd., China
24. Xinjiang Communications Construction Group Co., Ltd, China
25. HZMC-Aarogya JV, Kathmandu, Nepal
26. China State Construction Engineering Corporation Limited, Beijing, China
27. Jiangsu-Sagun Joint Venture, Butwal, Rupandehi, Nepal
28. Tianjin-ANK JV, Kathmandu, Nepal
29. ENEZ/Pacific JV, Kathmandu, Nepal
30. RMNIL-OASIS JV, Kathmandu, Nepal
31. Shandong Luqiao Group Co., Ltd, China
32. Ashoka Buildcon Ltd, India - *conditionally*

Project Director

**b. Prequalified applicants for contract for lot 2:** SRCTIP-DOR-W-NNM-ICB-2

1. Huashui-Kankai JV, Jhapa, Nepal
2. Guizhou Bridge Construction Group Co. Ltd., China
3. Jiangsu Provincial Transportation Engineering Group Co. Ltd, China
4. Kumar-GGHB Joint Venture, Kathmandu, Nepal
5. Simplex - Rautaha - Khani JV, Kathmandu, Nepal
6. China Gezhouba Group Company Limited, China
7. China Civil Engineering Construction Corporation, China
8. Longjian-Ashish Joint Venture, Chitwan, Nepal
9. Sharma-Lama-ZICG Joint Venture, Kathmandu, Nepal
10. China International Water & Electric Corporation, China
11. Kalika-Ranken Joint Venture, Kathmandu, Nepal
12. China National Aero - Technology International Engineering corporation, China
13. China Overseas Engineering Group Co., Ltd., China
14. Hunan Road and Bridge Construction Group Co., Ltd, China
15. Sichuan Road and Bridge Construction (Group) Co., Ltd, China
16. Poly Changda Engineering Co., Ltd, China
17. China Gansu International Economic and Technical Cooperation Co. Ltd, China
18. CAMCE-SCME JV, China
19. Hebei Construction Group Co. Ltd., China
20. Hangzhou Zhejiang Municipal Construction Co., Ltd., China
21. GYC-Tundi JV, Nepal
22. Zhejiang Communications Construction Group Co., Ltd, China
23. China State Construction Engineering Corporation Limited, Beijing, China
24. Dineshchandra R. Agrawal Infracon Pvt. Ltd., Gujrat, India
25. China First Highway Engineering Co., Ltd, China
26. Shanghai Construction Group Co. Ltd., China
27. EN-EZ Insaat Sanayi ve Ticaret Anonim Sirketi, Turkey
28. Raman-GIETC JV, Janakpur, Nepal
29. CICO-Samanantar JV, Kathmandu, Nepal
30. Shandong Luqiao Group Co., Ltd, China
31. Sichuan-Ank JV, Kathmandu, Nepal
32. Ashoka Buildcon Ltd, India - *conditionally*

**c. Prequalified applicants for combination of contracts both lot 1: SRCTIP-DOR-W-NNM-ICB-1 and lot 2: SRCTIP-DOR-W-NNM-ICB-2**

1. Jiangsu Provincial Transportation Engineering Group Co. Ltd, China
2. China Gezhouba Group Company Limited, China
3. China International Water and Electric Corporation, China
4. China Overseas Engineering Group Co., Ltd., China
5. Sichuan Road and Bridge Construction (Group) Co., Ltd, China
6. Poly Changda Engineering Co., Ltd, China
7. Hebei Construction Group Co. Ltd. China
8. GYC-Tundi JV, Nepal
9. Zhejiang Communication Construction Group Co., Ltd, China
10. China State Construction Engineering Corporation Limited, Beijing, China

Project Director

11. Dineshchandra R. Agrawal Infracon Pvt. Ltd., Gujrat, India
12. Shanghai Construction Group Co. Ltd., China
13. Shandong Luqiao Group Co., Ltd, China
14. Ashoka Buildcon Ltd, India - *conditionally*

3. Bidders may Bid for contracts pequaiifed for as indicated in paragraphs 2a, 2b, and 2c above and further defined in the bidding document. Bidders prequalified for both contracts and wishing to offer discounts in case they are awarded more than one contract will be allowed to do so, provided those discounts are included in the Letter of Bid.

4. Bidding will be conducted through international competitive procurement using Request for Bids (RFB) as specified in the World Bank's "Procurement Regulations for IPF Borrowers- July 2016 Revised November 2020" ("Procurement Regulations"), and is open to all prequalified eligible Bidders.

5. Prequalified eligible Bidders may obtain further information from Department of Roads, Development Cooperation Implementation Division, Strategic Road Connectivity and Trade Improvement Project, Jwagal, Lalitpur, email: dorfcb@dor.gov.np and inspect the bidding document during office hours at the address given below.

6. The bidding document in English may be purchased by prequalified eligible Bidders upon the submission of a written application to the address below and upon payment of a nonrefundable fee of NPR 20,000.00 or equivalent. The method of payment will be direct deposit to following account:

   Name of the Bank: Rastriya Banijya Bank, Teku, Kathmandu
   Name of Office: Road Sector Development Project, Jwagal, Lalitpur
   Office Code No.: 337013511
   Office Account No. 1000200010000
   Rajaswa (revenue) Shirshak No. 14229
   Swift Code: RBBANPKA.

The document may be downloaded from Department of Roads website: www.dor.gov.np or Public Procurement Monitoring Office website www.bolpatra.gov.np/egp

7. Bids must be delivered to the address below on or before **12:00 hours (Nepal Standard Time), 11 November, 2021**. Electronic bidding will be permitted. Alternatively, the applicant may inspect and or submit the bids by visiting electronic procurement portal http://www.bolpatra.gov.np of Public Procurement Monitoring Office (PPMO) of Government of Nepal. Prequalified bidders who choose to submit their bid electronically shall deposit the fee of bidding document in the revenue account given above and the scanned copy of the bank deposit voucher shall be uploaded at the time of e-bid submission. For e-submission, the bidder is required to register in the e-GP portal https://www.bolpatra.gov.np for downloading and submitting the bid electronically. Late Bids will be rejected. Bids will be publicly opened in the presence of the Bidders' designated representatives and anyone who chooses to attend at the address below on **14:00 hours (Nepal Standard Time), 11 November 2021.**

8. All Bids must be accompanied by a Bid Security as stated in paragraph 1 above.

Project Director

9. The bidder shall submit the bid with letter of bid duly completed as per Instructions to Bidders Clause 12.1. The bid without the total bid amount shall be considered non responsive and shall be rejected.

10. Attention is drawn to the Procurement Regulations requiring the Borrower to disclose information on the successful bidder's beneficial ownership, as part of the Contract Award Notice, using the Beneficial Ownership Disclosure Form as included in the bidding document.

11. The address referred to above is:

**Project Director**
Strategic Road Connectivity and Trade Improvement Project
Jwagal, Lalitpur, Nepal
Tel: +977-1-5541687 /+977-1-5541686
E-mail: dorfcb@dor.gov.np
Website: www.dor.gov.np

Project Director

# Request for Bids
# Works
## (After Prequalification)

Improvement of Nagdunga-Naubise Section (Km 0+000 to Km 12+260)
of Tribhuvan Highway

Contract Identification No. SRCTIP-DOR-W-NNM-ICB-1 [Lot 1]

Project Director

# Standard Procurement Document

# Summary

## Bidding Document: Request for Bids – Works (After Prequalification)

## PART 1 – BIDDING PROCEDURES

**Section I - Instructions to Bidders (ITB)**

This Section provides relevant information to help prequalified Bidders prepare their Bids. It is based on a one-envelope Bidding process. Information is also provided on the submission, opening, and evaluation of Bids and on the award of Contracts. **Section I contains provisions that are to be used without modification.**

**Section II - Bid Data Sheet (BDS)**

This Section includes provisions that are specific to each procurement and that supplement Section I, Instructions to Bidders.

**Section III - Evaluation and Qualification Criteria**

This Section specifies the criteria to determine the Most Advantageous Bid.

**Section IV - Bidding Forms**

This Section includes the forms for the Bid Submission, Bill of Quantities, Schedules of technical proposal, including technical and financial qualifications, personnel, financial resources, and equipment, Bid Security and others to be completed and submitted by the Bidder as part of its Bid.

**Section V - Eligible Countries**

This Section contains information regarding eligible countries.

**Section VI - Fraud and Corruption**

This Section includes the Fraud and Corruption provisions which apply to this Bidding process.

Project Director

## PART 2 – WORKS' REQUIREMENTS

### Section VII - Works' Requirements

This Section specifies the Scope of Works, Specification, the Drawings, and supplementary information that constitute the Works' Requirements for the Works to be procured. The Works' Requirements also include the environmental and social (ES) requirements (including requirements relating to Sexual Exploitation and Abuse (SEA) and Sexual Harassment (SH) which are to be satisfied by the Contractor in executing the works.

## PART 3 – CONDITIONS OF CONTRACT AND CONTRACT FORMS

### Section VIII - General Conditions (GC)

This Section refers to the "General Conditions" which form part of the Conditions of Contract for Construction (Second Edition 2017) published by the Federation Internationale Des Ingenieurs – Conseils (FIDIC).

### Section IX - Particular Conditions (PC)

This Section includes particular conditions of the contract consisting of: Part A-Contract Data; Part B -Special Provisions, PART C – Fraud and Corruption; and PART D – Environmental and Social (ES) Reporting Metrics for Progress Reports. The contents of this Section supplement the General Conditions and shall be completed by the Employer.

### Section X - Contract Forms

This Section contains the Letter of Acceptance, Contract Agreement and other relevant forms.

Project Director

## Notice of Request for Bids

# Request for Bids
# Works
## (After Prequalification)

**Employer:** Department of Roads, Development Cooperation Implementation Division, Strategic Road Connectiviy and Trade Improvement Project

**Project:** Strategic Road Connectiviy and Trade Improvement Project

**Contract title: i)** *Improvement of Nagdhunga-Naubise-Mugling Road and Bridges [CH: 0+000 to CH: 12+260, Tribhuvan Highway]*

*ii) Improvement of Nagdhunga-Naubise-Mugling Road and Bridges [CH: 0+000 to CH: 43+540 Km, Prithvi Highway]*

**Country:** Nepal

**Credit No.: 6673-NP**

**RFB Nos: (i)** SRCTIP-DOR-W-NNM-ICB-1; and (ii) SRCTIP-DOR-W-NNM-ICB-2

**Issued on:** *23 September 2021*

1. The Government of Nepal, Ministry of Physical Infrastructure and Transport, Department of Roads has received financing from the World Bank toward the cost of the the Strategic Road Connectivity and Trade Improvement Project, and intends to apply part of the proceeds toward payments under the contracts for Improvement/Construction of following Works:

| Package No. | Lot No. and Contract Identification No. | Contract Description | Cost of Bid Documents | Bid Security Amount |
|---|---|---|---|---|
| 1 | Lot-1: SRCTIP-DOR-W-NNM-ICB-1 | Improvement of Nagdunga-Naubise section (12.62 Km) of Tribhuvan Highway | NPR 20,000.00 | NPR 41,500,000.00 or USD 348,500.00 |
| | Lot-2: SRCTIP-DOR-W-NNM-ICB-2 | Improvement of Naubise-Malekhu section (43.542 Km) of Prithvi Highway | NPR 20,000.00 | NPR 158,500,000.00 or USD 1,331,000.00 |

2. The Department of Roads, Development Cooperation Implementation Division, Strategic Road Connectivity and Trade Improvement Project now invites sealed Bids from the following prequalified eligible Applicants for Improvement of Nagdhunga-Naubise Section of the Tribhuvan Highway [Km 0+000 to Km 12+260] and (ii) Improvement of Naubise-Malekhu Section of the Prithvi Highway [Km 0+000 to Km 43+542]. The bids for lots and

Project Director

their combination shall be considered only from bidders that are prequalified and identified under respective lots as per paragraphs 2(a), 2 (b) and 2 (c) below. All other bids shall be rejected. A bidder prequalified for individual lots 1 and 2 but not for combination of both lots, if determined successful for both the lots individually, the Employer will decide which of the two lots will be awarded to the bidder based on the total lowest evaluated cost to the Employer for the Package comprising of both lots.The works mainly consists of widening of existing carriageway existing road to standard two- lane road with 4 lanes at built-up area with asphalt concrete pavement, constructing climbing/passing lanes at selected locations, construction of two lane bridges, extension of existing pipe and slab culverts, construction of retaining walls and drain. The total contract duration will be (i) 2 years for ICB-1 and 3 years for ICB-2 for construction/ improvement under Phase 1 followed by 5 years of Performance Based Maintenance period under Phase 2 (including DNP of Phase 1). The margin of preference shall apply and will be 7.5%.

a. **Prequalified Applicants for Lot-1**: SRCTIP-DOR-W-NNM-ICB-1

1. Niraj Cement Structurals Ltd., India
2. Jiangsu Provincial Transportation Engineering Group Co. Ltd., China
3. Kumar - GGHB - BBNS JV, Nepal
4. Ashish Nirman Sewa Pvt. Ltd., Nepal
5. Simplex- Rautaha - Khani JV, Kathmandu,Nepal
6. China Gezhouba Group Company Limited, China
7. China Civil Engineering Construction Corporation, China
8. VRSIPL- Hanuman- DS JV, Nepal
9. Sharma & Company Pvt. Ltd., Nepal
10. China International Water & Electric Corporation, China
11. Kalika - Vedanshee JV, Nepal
12. Lama - P.S. - Golden JV, Nepal
13. China Overseas Engineering Group Co., Ltd., China
14. Sichuan Road and Bridge Construction (Group) Co., Ltd, China
15. Poly Changda Engineering Co., Ltd, China
16. Dineshchandra R. Agrawal Infracon Pvt. Ltd., Gujrat, India
17. China Harbour Engineering Company Ltd, China
18. HICC & Amar Construction JV, Kathmandu, Nepal
19. Sanghai Construction Group Co. Ltd., China
20. GYC-Tundi Joint Venture, Lalitpur, Nepal
21. Zhejiang Teams International Economic & Technical Cooepration Co., Ltd., China
22. Zhejiang Communications Construction Group Co., Ltd, China
23. Hebei Construction Group Co. Ltd., China
24. Xinjiang Communications Construction Group Co., Ltd, China
25. HZMC-Aarogya JV, Kathmandu, Nepal
26. China State Construction Engineering Corporation Limited, Beijing, China
27. Jiangsu-Sagun Joint Venture, Butwal, Rupandehi, Nepal
28. Tianjin-ANK JV, Kathmandu, Nepal
29. ENEZ/Pacific JV, Kathmandu, Nepal
30. RMNIL-OASIS JV, Kathmandu, Nepal
31. Shandong Luqiao Group Co., Ltd, China
32. Ashoka Buildcon Ltd, India - *conditionally*

Project Director

**b. Prequalified applicants for contract for lot 2:** SRCTIP-DOR-W-NNM-ICB-2

1. Huashui-Kankai JV, Jhapa, Nepal
2. Guizhou Bridge Construction Group Co. Ltd., China
3. Jiangsu Provincial Transportation Engineering Group Co. Ltd, China
4. Kumar-GGHB Joint Venture, Kathmandu, Nepal
5. Simplex - Rautaha - Khani JV, Kathmandu, Nepal
6. China Gezhouba Group Company Limited, China
7. China Civil Engineering Construction Corporation, China
8. Longjian-Ashish Joint Venture, Chitwan, Nepal
9. Sharma-Lama-ZICG Joint Venture, Kathmandu, Nepal
10. China International Water & Electric Corporation, China
11. Kalika-Ranken Joint Venture, Kathmandu, Nepal
12. China National Aero - Technology International Engineering corporation, China
13. China Overseas Engineering Group Co., Ltd., China
14. Hunan Road and Bridge Construction Group Co., Ltd, China
15. Sichuan Road and Bridge Construction (Group) Co., Ltd, China
16. Poly Changda Engineering Co., Ltd, China
17. China Gansu International Economic and Technical Cooperation Co. Ltd, China
18. CAMCE-SCME JV, China
19. Hebei Construction Group Co. Ltd., China
20. Hangzhou Zhejiang Municipal Construction Co., Ltd., China
21. GYC-Tundi JV, Nepal
22. Zhejiang Communications Construction Group Co., Ltd, China
23. China State Construction Engineering Corporation Limited, Beijing, China
24. Dineshchandra R. Agrawal Infracon Pvt. Ltd., Gujrat, India
25. China First Highway Engineering Co., Ltd, China
26. Shanghai Construction Group Co. Ltd., China
27. EN-EZ Insaat Sanayi ve Ticaret Anonim Sirketi, Turkey
28. Raman-GIETC JV, Janakpur, Nepal
29. CICO-Samanantar JV, Kathmandu, Nepal
30. Shandong Luqiao Group Co., Ltd, China
31. Sichuan-Ank JV, Kathmandu, Nepal
32. Ashoka Buildcon Ltd, India - *conditionally*

**c. Prequalified applicants for combination of contracts both lot 1: SRCTIP-DOR-W-NNM-ICB-1 and lot 2: SRCTIP-DOR-W-NNM-ICB-2**

1. Jiangsu Provincial Transportation Engineering Group Co. Ltd, China
2. China Gezhouba Group Company Limited, China
3. China International Water and Electric Corporation, China
4. China Overseas Engineering Group Co., Ltd., China
5. Sichuan Road and Bridge Construction (Group) Co., Ltd, China
6. Poly Changda Engineering Co., Ltd, China
7. Hebei Construction Group Co. Ltd. China
8. GYC-Tundi JV, Nepal
9. Zhejiang Communication Construction Group Co., Ltd, China
10. China State Construction Engineering Corporation Limited, Beijing, China

Project Director

11. Dineshchandra R. Agrawal Infracon Pvt. Ltd., Gujrat, India
12. Shanghai Construction Group Co. Ltd., China
13. Shandong Luqiao Group Co., Ltd, China
14. Ashoka Buildcon Ltd, India - *conditionally*

3. Bidders may Bid for contracts pequaiifed for as indicated in paragraphs 2a, 2b, and 2c above and further defined in the bidding document. Bidders prequalified for both contracts and wishing to offer discounts in case they are awarded more than one contract will be allowed to do so, provided those discounts are included in the Letter of Bid.

4. Bidding will be conducted through international competitive procurement using Request for Bids (RFB) as specified in the World Bank's "Procurement Regulations for IPF Borrowers- July 2016 Revised November 2020" ("Procurement Regulations"), and is open to all prequalified eligible Bidders.

5. Prequalified eligible Bidders may obtain further information from Department of Roads, Development Cooperation Implementation Division, Strategic Road Connectivity and Trade Improvement Project, Jwagal, Lalitpur, email: dorfcb@dor.gov.np and inspect the bidding document during office hours at the address given below.

6. The bidding document in English may be purchased by prequalified eligible Bidders upon the submission of a written application to the address below and upon payment of a nonrefundable fee of NPR 20,000.00 or equivalent. The method of payment will be direct deposit to following account:

   Name of the Bank: Rastriya Banijya Bank, Teku, Kathmandu
   Name of Office: Road Sector Development Project, Jwagal, Lalitpur
   Office Code No.: 337013511
   Office Account No. 1000200010000
   Rajaswa (revenue) Shirshak No. 14229
   Swift Code: RBBANPKA.

The document may be downloaded from Department of Roads website: www.dor.gov.np or Public Procurement Monitoring Office website www.bolpatra.gov.np/egp

7. Bids must be delivered to the address below on or before **12:00 hours (Nepal Standard Time), 11 November, 2021**. Electronic bidding will be permitted. Alternatively, the applicant may inspect and or submit the bids by visiting electronic procurement portal http://www.bolpatra.gov.np of Public Procurement Monitoring Office (PPMO) of Government of Nepal. Prequalified bidders who choose to submit their bid electronically shall deposit the fee of bidding document in the revenue account given above and the scanned copy of the bank deposit voucher shall be uploaded at the time of e-bid submission. For e-submission, the bidder is required to register in the e-GP portal https://www.bolpatra.gov.np for downloading and submitting the bid electronically. Late Bids will be rejected. Bids will be publicly opened in the presence of the Bidders' designated representatives and anyone who chooses to attend at the address below on **14:00 hours (Nepal Standard Time), 11 November 2021.**

8. All Bids must be accompanied by a Bid Security as stated in paragraph 1 above.

Project Director

9. The bidder shall submit the bid with letter of bid duly completed as per Instructions to Bidders Clause 12.1. The bid without the total bid amount shall be considered non responsive and shall be rejected.
10. Attention is drawn to the Procurement Regulations requiring the Borrower to disclose information on the successful bidder's beneficial ownership, as part of the Contract Award Notice, using the Beneficial Ownership Disclosure Form as included in the bidding document.
11. The address referred to above is:

**Project Director**
Strategic Road Connectivity and Trade Improvement Project
Jwagal, Lalitpur, Nepal
Tel: +977-1-5541687 /+977-1-5541686
E-mail: dorfcb@dor.gov.np
Website: www.dor.gov.np

Project Director

# Request for Bids
# Works
## (After Prequalification)

## Procurement of:
## Improvement of Nagdunga-Naubise Section of Tribhuvan Highway (Km 0+000 – Km 12+260)
### Contract Identification No. SRCTIP-DOR-W-NNM-ICB-1

**Employer:** Department of Roads, Development Cooperation Implementation Division, Strategic Road Connectivity and Trade Improvement Project

**Project:**Strategic Road Connecitivty and Trade Improvement Project

**Contract title:** Improvement of Nagdhunga-Naubise-Mugling Road and Bridges [CH: 0+000 to CH: 12+260, Tribhuvan Highway]

**Country:** Nepal

**Credit No.:** 6673-NP

**RFB No:** SRCTIP-DOR-W-NNM-ICB-1

**Issued on:** *23 September 2021*

Project Director

# Standard Procurement Document

## Table of Contents

**PART 1 – Bidding Procedures.....3**
Section I - Instructions to Bidders .....4
Section II - Bid Data Sheet (BDS).....35
Section III - Evaluation and Qualification Criteria.....44
Section IV - Bidding Forms.....49
Section V - Eligible Countries .....92
Section VI - Fraud and Corruption .....93

**PART 2 –Works' Requirements.....95**
Section VII - Works' Requirements .....97

**PART 3 – Conditions of Contract and Contract Forms .....107**
Section VIII - General Conditions (GC).....108
Section IX - Particular Conditions of Contract.....109
Section X - Contract Forms .....168

Project Director

# PART 1 – Bidding Procedures

Project Director

# Section I - Instructions to Bidders

Table of Content

**A. General** ..... **6**
**1.** Scope of Bid ..... 6
**2.** Source of Funds ..... 7
**3.** Fraud and Corruption ..... 7
**4.** Eligible Bidders ..... 8
**5.** Eligible Materials, Equipment, and Services ..... 10

**B. Contents of Bidding Document** ..... **11**
**6.** Sections of Bidding Document ..... 11
**7.** Clarification of Bidding Document, Site Visit, Pre-Bid Meeting ..... 12
**8.** Amendment of Bidding Document ..... 13

**C. Preparation of Bids** ..... **13**
**9.** Cost of Bidding ..... 13
**10.** Language of Bid ..... 13
**11.** Documents Comprising the Bid ..... 14
**12.** Letter of Bid and Schedules ..... 14
**13.** Alternative Bids ..... 15
**14.** Bid Prices and Discounts ..... 15
**15.** Currencies of Bid and Payment ..... 16
**16.** Documents Comprising the Technical Proposal ..... 17
**17.** Documents Establishing the Eligibility and Qualifications of the Bidder ..... 17
**18.** Period of Validity of Bids ..... 17
**19.** Bid Security ..... 18
**20.** Format and Signing of Bid ..... 20

**D. Submission and Opening of Bids** ..... **21**
**21.** Sealing and Marking of Bids ..... 21
**22.** Deadline for Submission of Bids ..... 21
**23.** Late Bids ..... 22
**24.** Withdrawal, Substitution, and Modification of Bids ..... 22

Project Director

**25.** Bid Opening ..... 22

**E. Evaluation and Comparison of Bids ..... 24**

**26.** Confidentiality ..... 24
**27.** Clarification of Bids ..... 24
**28.** Deviations, Reservations, and Omissions ..... 25
**29.** Determination of Responsiveness ..... 25
**30.** Nonmaterial Nonconformities ..... 25
**31.** Correction of Arithmetical Errors ..... 26
**32.** Conversion to Single Currency ..... 27
**33.** Margin of Preference ..... 27
**34.** Subcontractors ..... 27
**35.** Evaluation of Bids ..... 27
**36.** Comparison of Bids ..... 28
**37.** Abnormally Low Bids ..... 28
**38.** Unbalanced or Front Loaded Bids ..... 29
**39.** Qualifications of the Bidder ..... 29
**40.** Most Advantageous Bid ..... 30
**41.** Employer's Right to Accept Any Bid, and to Reject Any or All Bids ..... 30
**42.** Standstill Period ..... 30
**43.** Notification of Intention to Award ..... 30

**F. Award of Contract ..... 31**

**44.** Award Criteria ..... 31
**45.** Notification of Award ..... 31
**46.** Debriefing by the Employer ..... 32
**47.** Signing of Contract ..... 33
**48.** Performance Security ..... 33
**49.** Procurement Related Complaint ..... 33

Project Director

# SECTION I - INSTRUCTIONS TO BIDDERS

## A. General

**1. Scope of Bid**

1.1. The Employer, as **specified in the BDS**, issues this bidding document for the provision of Works as specified in Section VII, Works' Requirements. The name, identification, and number of lots (contracts) of this RFB are **specified in the BDS.**

1.2. Throughout this bidding document:

the term "**in writing**" means communicated in written form (e.g. by mail, e-mail, fax, including if **specified in the BDS**, distributed or received through electronic-procurement system used by the Employer) with proof of receipt;

if the context so requires, "**singular**" means "**plural**' and vice versa;

"**Day**" means calendar day, unless otherwise specified as a "Business Day." A Business Day is any day that is a working day of the Borrower. It excludes the Borrower's official public holidays;

**"ES"** means environmental and social (including Sexual Exploitation and Abuse (SEA), and Sexual Harassment (SH));

**"Sexual Exploitation and Abuse" "(SEA)"** means the following:

**Sexual Exploitation** is defined as any actual or attempted abuse of position of vulnerability, differential power or trust, for sexual purposes, including, but not limited to, profiting monetarily, socially or politically from the sexual exploitation of another.

**Sexual Abuse** is defined as the actual or threatened physical intrusion of a sexual nature, whether by force or under unequal or coercive conditions;

**"Sexual Harassment" "(SH)"** is defined as unwelcome sexual advances, requests for sexual favors, and other verbal or physical conduct of a sexual nature by the Contractor's Personnel with other Contractor's or Employer's Personnel;

Project Director

**"Contractor's Personnel"** is as defined in Sub-Clause 1.1.17 of the General Conditions; and

**"Employer's Personnel"** is as defined in Sub-Clause 1.1.33 of the General Conditions.

A non-exhaustive list of (i) behaviors which constitute SEA and (ii) behaviors which constitute SH is attached to the Code of Conduct form in Section IV.

**2. Source of Funds**

2.1. The Borrower or Recipient (hereinafter called "Borrower") **specified in the BDS** has received or has applied for financing (hereinafter called "funds") from the International Bank for Reconstruction and Development or the International Development Association (hereinafter called "the Bank") in an amount specified in the BDS, toward the project named in the BDS. The Borrower intends to apply a portion of the funds to eligible payments under the contract(s) for which this bidding document is issued.

2.2. Payment by the Bank will be made only at the request of the Borrower and upon approval by the Bank, and will be subject, in all respects, to the terms and conditions of the Loan (or other financing) Agreement. The Loan (or other financing) Agreement prohibits a withdrawal from the loan account for the purpose of any payment to persons or entities, or for any import of goods, equipment, plant, or materials, if such payment or import is prohibited by a decision of the United Nations Security Council taken under Chapter VII of the Charter of the United Nations. No party other than the Borrower shall derive any rights from the Loan (or other financing) Agreement or have any claim to the proceeds of the Loan (or other financing).

**3. Fraud and Corruption**

3.1. The Bank requires compliance with the Bank's Anti-Corruption Guidelines and its prevailing sanctions policies and procedures as set forth in the WBG's Sanctions Framework, as set forth in Section VI.

3.2. In further pursuance of this policy, Bidders shall permit and shall cause their agents (where declared or not), subcontractors, subconsultants, service providers, suppliers, and personnel, to permit the Bank to inspect all accounts, records and other documents relating to any initial selection process, prequalification process, bid submission, proposal submission and contract performance (in the case of award), and to have them audited by auditors appointed by the Bank.

Project Director

## 4. Eligible Bidders

**4.1.** A Bidder may be a firm that is a private entity, a state-owned enterprise or institution subject to ITB 4.6 or any combination of such entities in the form of a joint venture (JV) under an existing agreement or with the intent to enter into such an agreement supported by a letter of intent. In the case of a joint venture, all members shall be jointly and severally liable for the execution of the entire Contract in accordance with the Contract terms. The JV shall nominate a Representative who shall `have the authority to conduct all business for and on behalf of any and all the members of the JV during the Bidding process and, in the event the JV is awarded the Contract, during contract execution. Unless specified in the BDS, there is no limit on the number of members in a JV.

4.2. A Bidder shall not have a conflict of interest. Any Bidder found to have a conflict of interest shall be disqualified. A Bidder may be considered to have a conflict of interest for the purpose of this Bidding process, if the Bidder:

(a) directly or indirectly controls, is controlled by or is under common control with another Bidder; or

(b) receives or has received any direct or indirect subsidy from another Bidder; or

(c) has the same legal representative as another Bidder; or

(d) has a relationship with another Bidder, directly or through common third parties, that puts it in a position to influence the Bid of another Bidder, or influence the decisions of the Employer regarding this Bidding process; or

(e) or any of its affiliates participated as a consultant in the preparation of the design or technical specifications of the works that are the subject of the Bid; or

(f) or any of its affiliates has been hired (or is proposed to be hired) by the Employer or Borrower as Engineer for the Contract implementation; or

(g) would be providing goods, works, or non-consulting services resulting from or directly related to consulting services for the preparation or implementation of the project specified in the BDS ITB 2.1 that it provided or were provided by any affiliate that directly or indirectly controls, is

Project Director

controlled by, or is under common control with that firm; or

(h) has a close business or family relationship with a professional staff of the Borrower (or of the project implementing agency, or of a recipient of a part of the loan) who: (i) are directly or indirectly involved in the preparation of the bidding document or specifications of the Contract, and/or the Bid evaluation process of such Contract; or (ii) would be involved in the implementation or supervision of such contract unless the conflict stemming from such relationship has been resolved in a manner acceptable to the Bank throughout the Bidding process and execution of the Contract.

4.3. A firm that is a Bidder (either individually or as a JV member) shall not participate in more than one Bid, except for permitted alternative Bids. This includes participation as a subcontractor in other Bids. Such participation shall result in the disqualification of all Bids in which the firm is involved. A firm that is not a Bidder or a JV member may participate as a subcontractor in more than one Bid.

4.4. A Bidder may have the nationality of any country, subject to the restrictions pursuant to ITB 4.8. A Bidder shall be deemed to have the nationality of a country if the Bidder is constituted, incorporated or registered in and operates in conformity with the provisions of the laws of that country, as evidenced by its articles of incorporation (or equivalent documents of constitution or association) and its registration documents, as the case may be. This criterion also shall apply to the determination of the nationality of proposed subcontractors or subconsultants for any part of the Contract including related Services.

4.5. A Bidder that has been sanctioned by the Bank, pursuant to the Bank's Anti-Corruption Guidelines, and in accordance with its prevailing sanctions policies and procedures as set forth in the WBG's Sanctions Framework, - as described in Section VI paragraph 2.2 d. shall be ineligible to be prequalified for, initially selected for, bid for, propose for, or be awarded a Bank-financed contract or benefit from a Bank-financed contract, financially or otherwise, during such period of time as the Bank shall have determined. The list of debarred firms and individuals is available at the electronic address specified in the BDS.

Project Director

4.6. Bidders that are state-owned enterprise or institutions in the Employer's Country may be eligible to compete and be awarded a Contract(s) only if they can establish, in a manner acceptable to the Bank, that they (i) are legally and financially autonomous (ii) operate under commercial law, and (iii) are not under supervision of the Employer.

4.7. A Bidder shall not be under suspension from bidding by the Employer as the result of the operation of a Bid–Securing or Proposal-Securing Declaration.

4.8. Firms and individuals may be ineligible if so indicated in Section V and (a) as a matter of law or official regulations, the Borrower's Country prohibits commercial relations with that country, provided that the Bank is satisfied that such exclusion does not preclude effective competition for the supply of goods or the contracting of works or services required; or (b) by an act of compliance with a decision of the United Nations Security Council taken under Chapter VII of the Charter of the United Nations, the Borrower's country prohibits any import of goods or contracting of works or services from that country, or any payments to any country, person, or entity in that country. When the Works are implemented across jurisdictional boundaries (and more than one country is a Borrower, and is involved in the procurement), then exclusion of a firm or individual on the basis of ITB 4.8 (a) above by any country may be applied to that procurement across other countries involved, if the Bank and the Borrowers involved in the procurement agree.

4.9. This Bidding is open only to prequalified Bidders.

4.10. A Bidder shall provide such documentary evidence of eligibility satisfactory to the Employer, as the Employer shall reasonably request.

4.11. A firm that is under a sanction of debarment by the Borrower from being awarded a contract is eligible to participate in this procurement, unless the Bank, at the Borrower's request, is satisfied that the debarment; (a) relates to fraud or corruption, and (b) followed a judicial or administrative proceeding that afforded the firm adequate due process.

**5. Eligible Materials, Equipment, and Services**

5.1. The materials, equipment and services to be supplied under the Contract and financed by the Bank may have their origin in any country subject to the restrictions specified in Section V, Eligible Countries, and all expenditures under the Contract will not contravene such restrictions. At the

Project Director

Employer's request, Bidders may be required to provide evidence of the origin of materials, equipment and services.

## B. Contents of Bidding Document

**6. Sections of Bidding Document**

6.1. The bidding document consists of Parts 1, 2, and 3, which includes all the sections specified below, and which should be read in conjunction with any Addenda issued in accordance with ITB 8.

PART 1 Bidding Procedures

- Section I - Instructions to Bidders (ITB)
- Section II - Bid Data Sheet (BDS)
- Section III - Evaluation and Qualification Criteria
- Section IV - Bidding Forms
- Section V - Eligible Countries
- Section VI - Fraud and Corruption

PART 2 Works' Requirements

- Section VII - Works' Requirements

PART 3 Conditions of Contract and Contract Forms

- Section VIII - General Conditions (GC)
- Section IX - Particular Conditions (PC)
- Section X - Contract Forms

6.2. The notice of Request for Bids (RFB) issued by the Employer to the prequalified Bidders is not part of the bidding document.

6.3. Unless obtained directly from the Employer, the Employer is not responsible for the completeness of the bidding document, responses to requests for clarification, the minutes of the pre-Bid meeting (if any), or Addenda to the bidding document in accordance with ITB 8. In case of any contradiction, documents obtained directly from the Employer shall prevail.

6.4. The Bidder is expected to examine all instructions, forms, terms, and specifications in the bidding document and to furnish with its Bid all information and documentation as is required by the bidding document.

Project Director

**7. Clarification of Bidding Document, Site Visit, Pre-Bid Meeting**

7.1. A Bidder requiring any clarification of the bidding document shall contact the Employer in writing at the Employer's address **specified in the BDS** or raise its enquiries during the pre-Bid meeting if provided for in accordance with ITB 7.4. The Employer will respond in writing to any request for clarification, provided that such request is received no later than fourteen (14) days prior to the deadline for submission of Bids. The Employer shall forward copies of its response to all Bidders who have acquired the bidding document in accordance with ITB 6.3, including a description of the inquiry but without identifying its source. If so specified in the BDS, the Employer shall also promptly publish its response at the web page identified in the BDS. Should the clarification result in changes to the essential elements of the bidding document, the Employer shall amend the bidding document following the procedure under ITB 8 and ITB 22.2.

7.2. The Bidder is advised to visit and examine the Site of Works and its surroundings and obtain for itself on its own responsibility all information that may be necessary for preparing the Bid and entering into a contract for construction of the Works. The costs of visiting the Site shall be at the Bidder's own expense.

7.3. The Bidder and any of its personnel or agents will be granted permission by the Employer to enter upon its premises and lands for the purpose of such visit, but only upon the express condition that the Bidder, its personnel, and agents will release and indemnify the Employer and its personnel and agents from and against all liability in respect thereof, and will be responsible for death or personal injury, loss of or damage to property, and any other loss, damage, costs, and expenses incurred as a result of the inspection.

7.4. If so specified in the BDS, the Bidder's designated representative is invited to attend a pre-Bid meeting and/or a Site of Works visit. The purpose of the meeting will be to clarify issues and to answer questions on any matter that may be raised at that stage.

7.5. The Bidder is requested to submit any questions in writing, to reach the Employer not later than one week before the meeting.

Project Director

7.6. Minutes of the pre-Bid meeting, if applicable, including the text of the questions asked by Bidders, without identifying the source, and the responses given, together with any responses prepared after the meeting, will be transmitted promptly to all Bidders who have acquired the bidding document in accordance with ITB 6.3. If so specified in the BDS, the Employer shall also promptly publish the Minutes of the pre-Bid meeting at the web page identified in the BDS. Any modification to the bidding document that may become necessary as a result of the pre-Bid meeting shall be made by the Employer exclusively through the issue of an Addendum pursuant to ITB 8 and not through the minutes of the pre-Bid meeting. Nonattendance at the pre-Bid meeting will not be a cause for disqualification of a Bidder.

**8. Amendment of Bidding Document**

8.1. At any time prior to the deadline for submission of Bids, the Employer may amend the bidding document by issuing addenda.

8.2. Any addendum issued shall be part of the bidding document and shall be communicated in writing to all who have obtained the bidding document from the Employer in accordance with ITB 6.3. The Employer shall also promptly publish the addendum on the Employer's web page in accordance with ITB 7.1.

8.3. To give Bidders reasonable time in which to take an addendum into account in preparing their Bids, the Employer should extend the deadline for the submission of Bids, pursuant to ITB 22.2.

## C. Preparation of Bids

**9. Cost of Bidding**

9.1. The Bidder shall bear all costs associated with the preparation and submission of its Bid, and the Employer shall not be responsible or liable for those costs, regardless of the conduct or outcome of the Bidding process.

**10. Language of Bid**

10.1. The Bid, as well as all correspondence and documents relating to the Bid exchanged by the Bidder and the Employer, shall be written in the language **specified in the BDS**. Supporting documents and printed literature that are part of the Bid may be in another language provided they are accompanied by an accurate translation of the relevant passages in the language **specified in the BDS**, in which

Project Director

case, for purposes of interpretation of the Bid, such translation shall govern.

**11. Documents Comprising the Bid**

11.1. The Bid shall comprise the following:

(a) Letter of Bid prepared in accordance with ITB 12;

(b) Schedules including priced Bill of Quantities, completed in accordance with ITB 12 and ITB 14;

(c) Bid Security or Bid-Securing Declaration, in accordance with ITB 19.1;

(d) Alternative Bid, if permissible, in accordance with ITB 13;

(e) Authorization: written confirmation authorizing the signatory of the Bid to commit the Bidder, in accordance with ITB 20.3;

(f) Qualifications: documentary evidence in accordance with ITB 17 establishing the Bidder's continued qualified status to perform the Contract if its Bid is accepted;

(g) Conformity: a technical proposal in accordance with ITB 16;

(h) any other document required in the BDS.

11.2. In addition to the requirements under ITB 11.1, Bids submitted by a JV shall include a copy of the Joint Venture Agreement entered into by all members. Alternatively, a letter of intent to execute a Joint Venture Agreement in the event of a successful Bid shall be signed by all members and submitted with the Bid, together with a copy of the proposed Agreement.

11.3. The Bidder shall furnish in the Letter of Bid information on commissions and gratuities, if any, paid or to be paid to agents or any other party relating to this Bid.

11.4. The Bidder shall furnish in the Letter of Bid three names of the potential DAAB members and attach their curriculum vitae. The list of potential DAAB members proposed by the Employer (Contract Data 21.1) and by the Bidder (Letter of Bid) shall be subject to Bank's No-objection.

**12. Letter of Bid and Schedules**

12.1. The Letter of Bid and Schedules, including the Bill of Quantities, shall be prepared using the relevant forms furnished in Section IV, Bidding Forms. The forms must be completed without any alterations to the text, and no substitutes shall be accepted except as provided under ITB

Project Director

20.3. All blank spaces shall be filled in with the information requested.

**13. Alternative Bids**

13.1. **Unless otherwise specified in the BDS**, alternative Bids shall not be considered.

13.2. When alternative time for completion are explicitly invited, a statement to that effect will be included in the BDS and the method of evaluating different alternative time for completion will be described in Section III, Evaluation and Qualification Criteria.

13.3. Except as provided under ITB 13.4 below, Bidders wishing to offer technical alternatives to the requirements of the bidding document must first price the Employer's design as described in the bidding document and shall further provide all information necessary for a complete evaluation of the alternative by the Employer, including drawings, design calculations, technical specifications, breakdown of prices, and proposed construction methodology and other relevant details. Only the technical alternatives, if any, of the Bidder with the Most Advantageous Bid conforming to the basic technical requirements shall be considered by the Employer.

13.4. When **specified in the BDS**, Bidders are permitted to submit alternative technical solutions for specified parts of the Works, and such parts will be identified **in the BDS**, as will the method for their evaluating, and described in Section VII, Works' Requirements.

**14. Bid Prices and Discounts**

14.1. The prices and discounts (including any price reduction) quoted by the Bidder in the Letter of Bid and in the Bill of Quantities shall conform to the requirements specified below.

14.2. The Bidder shall fill in rates and prices for all items of the Works described in the Bill of Quantities. Items against which no rate or price is entered by the Bidder shall be deemed covered by the rates for other items in the Bill of Quantities and will not be paid for separately by the Employer. An item not listed in the priced Bill of Quantities shall be assumed to be not included in the Bid, and provided that the Bid is determined substantially responsive notwithstanding this omission, the average price of the item quoted by substantially responsive Bidders will be added to the Bid price and the equivalent total cost of the Bid so determined will be used for price comparison.

Project Director

14.3. The price to be quoted in the Letter of Bid, in accordance with ITB 12.1, shall be the total price of the Bid, excluding any discounts offered.

14.4. The Bidder shall quote any discounts and the methodology for their application in the Letter of Bid, in accordance with ITB 12.1.

14.5. Unless otherwise **specified in the BDS** and the Conditions of Contract, the rates and prices quoted by the Bidder are subject to adjustment during the performance of the Contract in accordance with the provisions of the Conditions of Contract. In such a case, the Bidder shall furnish the indices and weightings for the price adjustment formulae in the Table of Adjustment Data and the Employer may require the Bidder to justify its proposed indices and weightings.

14.6. If so specified in ITB 1.1, Bids are being invited for individual lots (contracts) or for any combination of lots (packages). Bidders wishing to offer discounts for the award of more than one Contract shall specify in their Bid the price reductions applicable to each package, or alternatively, to individual Contracts within the package. Discounts shall be submitted in accordance with ITB 14.4, provided the Bids for all lots (contracts) are opened at the same time. **If, however, rated criteria is used in accordance with ITB 35.2, discounts on condition of award of more than one contract will not be used for Bid evaluation purpose.**

14.7. All duties, taxes, and other levies payable by the Contractor under the Contract, or for any other cause, as of the date 28 days prior to the deadline for submission of Bids, shall be included in the rates and prices and the total Bid Price submitted by the Bidder.

**15. Currencies of Bid and Payment**

15.1. The currency (ies) of the Bid and the currency (ies) of payments shall be the same and shall be as specified in the BDS.

15.2. Bidders may be required by the Employer to justify, to the Employer's satisfaction, their local and foreign currency requirements, and to substantiate that the amounts included in the unit rates and prices and shown in the Table of Adjustment Data in the Appendix to Bid are reasonable, in which case a detailed breakdown of the foreign currency requirements shall be provided by Bidders.

Project Director

**16. Documents Comprising the Technical Proposal**

16.1. The Bidder shall furnish a technical proposal including a statement of work methods, equipment, personnel, schedule and any other information as stipulated in Section IV, Bidding Forms, in sufficient detail to demonstrate the adequacy of the Bidder's proposal to meet the Work's requirements and the completion time.

**17. Documents Establishing the Eligibility and Qualifications of the Bidder**

17.1. In accordance with Section III, Evaluation and Qualification Criteria, to establish that the Bidder continues to meet the criteria used at the time of prequalification, the Bidder shall provide updated information on any assessed aspect that changed from that time including on Sexual Exploitation and Abuse (SEA) / SH disqualification status.

17.2. Any change in the structure or formation of a Bidder after being prequalified and invited to Bid (including, in the case of a JV, any change in the structure or formation of any member thereto) shall be subject to the written approval of the Employer prior to the deadline for submission of Bids. Such approval shall be denied if (i) a Bidder proposes to associate with a disqualified Bidder or in case of a disqualified joint venture, any of its members; (ii) as a consequence of the change, the Bidder no longer substantially meets the qualification criteria; or (iii) in the opinion of the Employer, the change may result in a substantial reduction in competition. Any such change should be submitted to the Employer not later than fourteen (14) days after the date of the notice for RFB sent to the prequalified Bidders.

17.3. If a margin of preference applies as specified in accordance with ITB 33.1, domestic Bidders, individually or in joint ventures, applying for eligibility for domestic preference shall supply all information required to satisfy the criteria for eligibility specified in accordance with ITB 33.1.

**18. Period of Validity of Bids**

18.1. Bids shall remain valid until the date specified in the BDS or any extended date if amended by the Employer in accordance with ITB 8. A Bid that is not valid until the date specified in the BDS, or any extended date if amended by the Employer in accordance with ITB 8, shall be rejected by the Employer as nonresponsive.

18.2. In exceptional circumstances, prior to the date of expiration of the Bid validity, the Employer may request Bidders to extend the period of validity of their Bids. The request and the responses shall be made in writing. If a Bid Security is requested in accordance with ITB 19, it shall also be

Project Director

extended for twenty-eight (28) days beyond the extended date for bid validity. A Bidder may refuse the request without forfeiting its Bid security. A Bidder granting the request shall not be required or permitted to modify its Bid, except as provided in ITB 18.3

18.3. If the award is delayed by a period exceeding fifty-six (56) days beyond the date of expiry of the Bid validity specified in accordance with ITB 18.1, the Contract price shall be determined as follows:

(a) in the case of fixed price contracts, the Contract price shall be the Bid price adjusted by the factor specified in the BDS;

(b) in the case of adjustable price contracts, no adjustment shall be made; or

(c) in any case, Bid evaluation shall be based on the Bid price without taking into consideration the applicable correction from those indicated above.

**19. Bid Security**

19.1. The Bidder shall furnish as part of its Bid, either a Bid-Securing Declaration or a Bid Security as specified in the BDS, in original form and, in the case of a Bid Security, in the amount and currency **specified in the BDS**.

19.2. A Bid-Securing Declaration shall use the form included in Section IV, Bidding Forms.

19.3. If a Bid Security is specified pursuant to ITB 19.1, the Bid Security shall be a demand guarantee in any of the following forms at the Bidder's option:

(a) an unconditional guarantee issued by a bank or non-bank financial institution (such as an insurance, bonding or surety company);

(b) an irrevocable letter of credit;

(c) a cashier's or certified check; or

(d) another security specified in the BDS,

from a reputable source from an eligible country. If an unconditional guarantee is issued by a non-bank financial institution located outside the Employer's Country, the issuing non-bank financial institution shall have a correspondent financial institution located in the Employer's Country to make it enforceable unless the Employer has agreed in writing, prior to Bid submission,

Project Director

that a correspondent financial institution is not required. In the case of a bank guarantee, the Bid Security shall be submitted either using the Bid Security Form included in Section IV, Bidding Forms, or in another substantially similar format approved by the Employer prior to Bid submission. The Bid Security shall be valid for twenty-eight (28) days beyond the original date of expiry of the Bid validity, or beyond any extended date if requested under ITB 18.2

19.4. If a Bid Security or Bid Securing Declaration is specified pursuant to ITB 19.1, any Bid not accompanied by a substantially responsive Bid Security or Bid-Securing Declaration shall be rejected by the Employer as non-responsive.

19.5. If a Bid Security is specified pursuant to ITB 19.1, the Bid Security of unsuccessful Bidders shall be returned as promptly as possible upon the successful Bidder's signing the Contract and furnishing the Performance Security and if required in the BDS, the Environmental and Social (ES) Performance Security pursuant to ITB 48.

19.6. The Bid Security of the successful Bidder shall be returned as promptly as possible once the successful Bidder has signed the Contract and furnished the required Performance Security, and if required in the BDS, the Environmental and Social, (ES) Performance Security.

19.7. The Bid Security may be forfeited:

(a) if a Bidder withdraws its Bid prior to the expiry date of the Bid validity specified by the Bidder on the Letter of Bid, or any extended date provided by the Bidder; or

(b) if the successful Bidder fails to:

(i) sign the Contract in accordance with ITB 47; or

(ii) furnish a Performance Security and if required in the BDS, the Environmental and Social (ES) Performance Security in accordance with ITB 48.

19.8. The Bid Security or the Bid-Securing Declaration of a JV shall be in the name of the JV that submits the Bid. If the JV has not been legally constituted into a legally enforceable JV at the time of Bidding, the Bid Security or the Bid-Securing

Project Director

Declaration shall be in the names of all future members as named in the letter of intent referred to in ITB 4.1 and ITB 11.2.

19.9. If a Bid Security is not required in the BDS, pursuant to ITB 19.1, and:

(a) if a Bidder withdraws its Bid prior to the expiry date of the Bid validity specified by the Bidder on the Letter of Bid or any extended date provided by the Bidder;; or

(b) if the successful Bidder fails to:

(i) sign the Contract in accordance with ITB 47; or

(ii) furnish a Performance Security and if required in the BDS, the Environmental and Social (ES) Performance Security in accordance with ITB 48.

the Borrower may, if provided for in the BDS, declare the Bidder ineligible to be awarded a contract by the Employer for a period of time stated in the BDS.

**20. Format and Signing of Bid**

20.1. The Bidder shall prepare one original of the documents comprising the Bid as described in ITB 11 and clearly mark it "ORIGINAL." Alternative Bids, if permitted in accordance with ITB 13, shall be clearly marked "ALTERNATIVE." In addition, the Bidder shall submit copies of the Bid, in the number **specified in the BDS** and clearly mark them "COPY." In the event of any discrepancy between the original and the copies, the original shall prevail.

20.2. Bidders shall mark as "CONFIDENTIAL" all information in their Bids which is confidential to their business. This may include proprietary information, trade secrets, or commercial or financially sensitive information.

20.3. The original and all copies of the Bid shall be typed or written in indelible ink and shall be signed by a person duly authorized to sign on behalf of the Bidder. This authorization shall consist of a written confirmation as specified in the BDS and shall be attached to the Bid. The name and position held by each person signing the authorization must be typed or printed below the signature. All pages of the Bid where entries or amendments have been made shall be signed or initialed by the person signing the Bid.

20.4. In case the Bidder is a JV, the Bid shall be signed by an authorized representative of the JV on behalf of the JV, and so as to be legally binding on all the members as evidenced

Project Director

by a power of attorney signed by their legally authorized representatives.

20.5. Any inter-lineation, erasures, or overwriting shall be valid only if they are signed or initialed by the person signing the Bid.

## D. Submission and Opening of Bids

**21. Sealing and Marking of Bids**

21.1. The Bidder shall deliver the Bid in a single, sealed envelope (one-envelope Bidding process). Within the single envelope the Bidder shall place the following separate, sealed envelopes:

(a) in an envelope marked "ORIGINAL", all documents comprising the Bid, as described in ITB 11; and

(b) in an envelope marked "COPIES", all required copies of the Bid; and

(c) if alternative Bids are permitted in accordance with ITB 13, and if relevant:

(i) in an envelope marked "ORIGINAL – ALTERNATIVE BID", the alternative Bid; and

(ii) in the envelope marked "COPIES – ALTERNATIVE BID", all required copies of the alternative Bid.

21.2. The inner and outer envelopes shall:

(a) bear the name and address of the Bidder;

(b) be addressed to the Employer in accordance with ITB 22.1;

(c) bear the specific identification of this Bidding process specified in accordance with BDS 1.1; and

(d) bear a warning not to open before the time and date for Bid opening.

21.3. If all envelopes are not sealed and marked as required, the Employer will assume no responsibility for the misplacement or premature opening of the Bid.

**22. Deadline for Submission of Bids**

22.1. Bids must be received by the Employer at the address and no later than the date and time specified in the BDS. When so specified in the BDS, Bidders shall have the option of submitting their Bids electronically. Bidders submitting

Project Director

Bids electronically shall follow the electronic Bid submission procedures specified in the BDS.

22.2. The Employer may, at its discretion, extend the deadline for the submission of Bids by amending the bidding document in accordance with ITB 8, in which case all rights and obligations of the Employer and Bidders previously subject to the deadline shall thereafter be subject to the deadline as extended.

**23. Late Bids**

23.1. The Employer shall not consider any Bid that arrives after the deadline for submission of Bids, in accordance with ITB 22. Any Bid received by the Employer after the deadline for submission of Bids shall be declared late, rejected, and returned unopened to the Bidder.

**24. Withdrawal, Substitution, and Modification of Bids**

24.1. A Bidder may withdraw, substitute, or modify its Bid after it has been submitted by sending a written notice, duly signed by an authorized representative, and shall include a copy of the authorization in accordance with ITB 20.3, (except that withdrawal notices do not require copies). The corresponding substitution or modification of the Bid must accompany the respective written notice. All notices must be:

(a) prepared and submitted in accordance with ITB 20 and ITB 21 (except that withdrawals notices do not require copies), and in addition, the respective envelopes shall be clearly marked "WITHDRAWAL," "SUBSTITUTION," "MODIFICATION;" and

(b) received by the Employer prior to the deadline prescribed for submission of Bids, in accordance with ITB 22.

24.2. Bids requested to be withdrawn in accordance with ITB 24.1 shall be returned unopened to the Bidders.

24.3. No Bid may be withdrawn, substituted, or modified in the interval between the deadline for submission of Bids and the date of expiry of Bid validity specified by the Bidder on the Letter of Bid or any extended date thereof.

**25. Bid Opening**

25.1. Except in the cases specified in ITB 23 and ITB 24.2, the Employer shall publicly open and read out in accordance with this ITB all Bids received by the deadline, at the date, time and place specified in the BDS, in the presence of Bidders` designated representatives and anyone who chooses to attend. Any specific electronic Bid opening

Project Director

procedures required if electronic Bidding is permitted in accordance with ITB 22.1, shall be as specified in the BDS.

25.2. First, envelopes marked "WITHDRAWAL" shall be opened and read out and the envelope with the corresponding Bid shall not be opened, but returned to the Bidder. No Bid withdrawal shall be permitted unless the corresponding withdrawal notice contains a valid authorization to request the withdrawal and is read out at Bid opening.

25.3. Next, envelopes marked "SUBSTITUTION" shall be opened and read out and exchanged with the corresponding Bid being substituted, and the substituted Bid shall not be opened, but returned to the Bidder. No Bid substitution shall be permitted unless the corresponding substitution notice contains a valid authorization to request the substitution and is read out at Bid opening.

25.4. Next, envelopes marked "MODIFICATION" shall be opened and read out with the corresponding Bid. No Bid modification shall be permitted unless the corresponding modification notice contains a valid authorization to request the modification and is read out at Bid opening.

25.5. Next, all remaining envelopes shall be opened one at a time, reading out: the name of the Bidder and whether there is a modification; the total Bid Price, per lot (contract) if applicable, including any discounts and alternative Bids; the presence or absence of a Bid Security or Bid-Securing Declaration, if required; and any other details as the Employer may consider appropriate.

25.6. Only Bids, alternative Bids and discounts that are opened and read out at Bid opening shall be considered further for evaluation. The Letter of Bid and the Bill of Quantities are to be initialed by representatives of the Employer attending Bid opening in the manner specified in the BDS.

25.7. The Employer shall neither discuss the merits of any Bid nor reject any Bid (except for late Bids, in accordance with ITB 23.1).

25.8. The Employer shall prepare a record of the Bid opening that shall include, as a minimum:

(a) the name of the Bidder and whether there is a withdrawal, substitution, or modification;

(b) the Bid Price, per lot (contract) if applicable, including any discounts;

Project Director

(c) any alternative Bids; and

(d) the presence or absence of a Bid Security, if one was required.

25.9. The Bidders' representatives who are present shall be requested to sign the record. The omission of a Bidder's signature on the record shall not invalidate the contents and effect of the record. A copy of the record shall be distributed to all Bidders.

## E. Evaluation and Comparison of Bids

**26. Confidentiality**

26.1. Information relating to the evaluation of Bids and recommendation of contract award shall not be disclosed to Bidders or any other persons not officially concerned with the Bidding process until information on Intention to Award the Contract is transmitted to all Bidders in accordance with ITB 43.

26.2. Any effort by a Bidder to influence the Employer in the evaluation of the Bids or Contract award decisions may result in the rejection of its Bid.

26.3. Notwithstanding ITB 26.2, from the time of Bid opening to the time of Contract award, if a Bidder wishes to contact the Employer on any matter related to the Bidding process, it shall do so in writing.

**27. Clarification of Bids**

27.1. To assist in the examination, evaluation, and comparison of the Bids, and qualification of the Bidders, the Employer may, at its discretion, ask any Bidder for a clarification of its Bid, given a reasonable time for a response. Any clarification submitted by a Bidder that is not in response to a request by the Employer shall not be considered. The Employer's request for clarification and the response shall be in writing. No change, including any voluntary increase or decrease, in the prices or substance of the Bid shall be sought, offered, or permitted, except to confirm the correction of arithmetic errors discovered by the Employer in the evaluation of the Bids, in accordance with ITB 31.

27.2. If a Bidder does not provide clarifications of its Bid by the date and time set in the Employer's request for clarification, its Bid may be rejected.

Project Director

**28. Deviations, Reservations, and Omissions**

28.1. During the evaluation of Bids, the following definitions apply:

(a) "Deviation" is a departure from the requirements specified in the bidding document;

(b) "Reservation" is the setting of limiting conditions or withholding from complete acceptance of the requirements specified in the bidding document; and

(c) "Omission" is the failure to submit part or all of the information or documentation required in the bidding document.

**29. Determination of Responsiveness**

29.1. The Employer's determination of a Bid's responsiveness is to be based on the contents of the Bid itself, as defined in ITB 11.

29.2. A substantially responsive Bid is one that meets the requirements of the bidding document without material deviation, reservation, or omission. A material deviation, reservation, or omission is one that:

(a) if accepted, would:

(i) affect in any substantial way the scope, quality, or performance of the Works specified in the Contract; or

(ii) limit in any substantial way, inconsistent with the bidding document, the Employer's rights or the Bidder's obligations under the proposed Contract; or

(b) if rectified, would unfairly affect the competitive position of other Bidders presenting substantially responsive Bids.

29.3. The Employer shall examine the technical aspects of the Bid submitted in accordance with ITB 16, in particular, to confirm that all requirements of Section VII, Works' Requirements have been met without any material deviation, reservation or omission.

29.4. If a Bid is not substantially responsive to the requirements of the bidding document, it shall be rejected by the Employer and may not subsequently be made responsive by correction of the material deviation, reservation, or omission.

**30. Nonmaterial Nonconformities**

30.1. Provided that a Bid is substantially responsive, the Employer may waive any nonconformities in the Bid.

Project Director

30.2. Provided that a Bid is substantially responsive, the Employer may request that the Bidder submit the necessary information or documentation, within a reasonable period of time, to rectify nonmaterial nonconformities in the Bid related to documentation requirements. Requesting information or documentation on such nonconformities shall not be related to any aspect of the price of the Bid. Failure of the Bidder to comply with the request may result in the rejection of its Bid.

30.3. Provided that a Bid is substantially responsive, the Employer shall rectify quantifiable nonmaterial nonconformities related to the Bid Price. To this effect, the Bid Price shall be adjusted, for comparison purposes only, to reflect the price of a missing or non-conforming item or component , by adding the average price of the item or component quoted by substantially responsive Bidders. If the price of the item or component cannot be derived from the price of other substantially responsive Bids, the Employer shall use its best estimate.

**31. Correction of Arithmetical Errors**

31.1. Provided that the Bid is substantially responsive, the Employer shall correct arithmetical errors on the following basis:

(a) if there is a discrepancy between the unit price and the total price that is obtained by multiplying the unit price and quantity, the unit price shall prevail and the total price shall be corrected, unless in the opinion of the Employer there is an obvious misplacement of the decimal point in the unit price, in which case the total price as quoted shall govern and the unit price shall be corrected;

(b) if there is an error in a total corresponding to the addition or subtraction of subtotals, the subtotals shall prevail and the total shall be corrected; and

(c) if there is a discrepancy between words and figures, the amount in words shall prevail, unless the amount expressed in words is related to an arithmetic error, in which case the amount in figures shall prevail subject to (a) and (b) above.

31.2. Bidders shall be requested to accept correction of arithmetical errors. Failure to accept the correction in accordance with ITB 31.1 shall result in the rejection of the Bid.

Project Director

**32. Conversion to Single Currency**

32.1. For evaluation and comparison purposes, the currency(ies) of the Bid shall be converted into a single currency **as specified in the BDS**.

**33. Margin of Preference**

33.1. Unless otherwise specified in the BDS, a margin of preference for domestic Bidders shall not apply.[1]

**34. Subcontractors**

34.1. Unless otherwise stated in the BDS, the Employer does not intend to **execute** any specific elements of the Works by subcontractors selected in advance by the Employer.

34.2. Bidders may propose subcontracting up to the percentage of total value of contracts or the volume of works as specified in the BDS. Subcontractors proposed by the Bidder shall be fully qualified for their parts of the Works.

**35. Evaluation of Bids**

**Technical Evaluation**

35.1. The Employer shall use the criteria and methodologies listed in Section III, Evaluation and Qualification Criteria.

35.2. If **specified in the BDS**, the Employer's evaluation will be carried out by applying rated criteria that take into account technical factors, in addition to cost factors. An Evaluated Bid Score will be calculated for each responsive Bid using the formula, specified in Section III, Evaluation and Qualification Criteria. The scores to be given to technical factors and sub factors are **specified in the BDS**. The weight to be assigned for the Technical factors and cost is **specified in the BDS**.

**Financial Evaluation**

35.3. To evaluate a Bid, the Employer shall consider the following:

(a) the Bid price, excluding Provisional Sums and the provision, if any, for contingencies in the Summary

[1] An individual firm is considered a domestic Bidder for purposes of the margin of preference if it is registered in the country of the Employer, has more than 50 percent ownership by nationals of the country of the Employer, and if it does not subcontract more than 10 percent of the contract price, excluding provisional sums, to foreign contractors. JVs are considered as domestic Bidders and eligible for domestic preference only if the individual member firms are registered in the country of the Employer or have more than 50 percent ownership by nationals of the country of the Employer, and the JV shall be registered in the country of the Borrower. The JV shall not subcontract more than 10 percent of the contract price, excluding provisional sums, to foreign firms. JVs between foreign and national firms will not be eligible for domestic preference.

Project Director

Bill of Quantities, but including Daywork items, where priced competitively;

(b) price adjustment for correction of arithmetic errors in accordance with ITB 31.1;

(c) price adjustment due to discounts offered in accordance with ITB 14.4;

(d) converting the amount resulting from applying (a) to (c) above, if relevant, to a single currency in accordance with ITB 32;

(e) price adjustment due to quantifiable nonmaterial nonconformities in accordance with ITB 30.3; and

(f) the additional evaluation factors specified in the BDS and Section III, Evaluation and Qualification Criteria.

35.4. The estimated effect of the price adjustment provisions of the Conditions of Contract, applied over the period of execution of the Contract, shall not be taken into account in Bid evaluation.

35.5. If this bidding document allows Bidders to quote separate prices for different lots (contracts), the methodology to determine the lowest evaluated cost of the lot (contract) combinations, including any discounts offered in the Letter of Bid, is specified in Section III, Evaluation and Qualification Criteria. **If, however, rated criteria is used in accordance with ITB 35.2, discounts on condition of award of more than one contract will not be used for Bid evaluation purpose.**

**36. Comparison of Bids**

36.1. The Employer shall compare the evaluated costs of all substantially responsive Bids established in accordance with ITB 35.2 to determine the Bid that has the lowest evaluated cost.

36.2. If ITB 35.2 is applicable, the Employer will determine the Bid with the highest combined technical and financial score in accordance with BDS 35.2.

**37. Abnormally Low Bids**

37.1. An Abnormally Low Bid is one where the Bid price, in combination with other elements of the Bid, appears so low that it raises material concerns as to the capability of the Bidder in regard to the Bidder's ability to perform the Contract for the offered Bid Price

37.2. In the event of identification of a potentially Abnormally Low Bid, the Employer shall seek written clarifications from

Project Director

the Bidder, including detailed price analyses of its Bid price in relation to the subject matter of the contract, scope, proposed methodology, schedule, allocation of risks and responsibilities and any other requirements of the bidding document.

37.3. After evaluation of the price analyses, in the event that the Employer determines that the Bidder has failed to demonstrate its capability to perform the Contract for the offered Bid Price, the Employer shall reject the Bid.

**38. Unbalanced or Front Loaded Bids**

38.1. If the Bid that is evaluated as the lowest evaluated cost is, in the Employer's opinion, seriously unbalanced or front loaded, the Employer may require the Bidder to provide written clarifications. Clarifications may include detailed price analyses to demonstrate the consistency of the Bid prices with the scope of works, proposed methodology, schedule and any other requirements of the bidding document.

38.2. After the evaluation of the information and detailed price analyses presented by the Bidder, the Employer may as appropriate:

(a) accept the Bid; or

(b) require that the total amount of the Performance Security be increased at the expense of the Bidder to a level not exceeding 20 % of the Contract Price; or

(c) reject the Bid.

**39. Qualifications of the Bidder**

39.1. The Employer shall determine to its satisfaction whether the Bidder that is selected as having submitted the lowest evaluated cost and substantially responsive Bid continues to be eligible and continues to meet the qualifying criteria.

39.2. The determination shall be based upon an examination of the documentary evidence of the Bidder's qualifications submitted by the Bidder, pursuant to ITB 17. The determination shall not take into consideration the qualifications of other firms such as the Bidder's subsidiaries, parent entities, affiliates, subcontractors (other than Specialized Subcontractors if permitted in the bidding document) or any other firm(s) different from the Bidder.

39.3. Prior to Contract award, the Employer will verify that the successful Bidder (including each member of a JV) is not disqualified by the Bank due to noncompliance with contractual SEA/SH prevention and response obligations. The Employer will conduct the same verification for each

Project Director

subcontractor proposed by the successful Bidder. If any proposed subcontractor does not meet the requirement, the Employer will require the Bidder to propose a replacement subcontractor.

39.4. An affirmative determination shall be a prerequisite for award of the Contract to the Bidder. A negative determination shall result in disqualification of the Bid, in which event the Employer shall proceed to the Bidder who offers a substantially responsive Bid with the next lowest evaluated cost to make a similar determination of that Bidder's qualifications to perform satisfactorily.

**40. Most Advantageous Bid**

40.1. The Employer shall determine the Most Advantageous Bid. The Most Advantageous Bid is the Bid of the Bidder that meets the Qualification Criteria and whose Bid has been after determined to be substantially responsive to the Bidding document and:

(a) when **rated criteria are used** is the Bid with the highest combined technical and financial score**;** or

(b) when **rated criteria are not used***,* is the Bid with the lowest evaluated cost.

**41. Employer's Right to Accept Any Bid, and to Reject Any or All Bids**

41.1. The Employer reserves the right to accept or reject any Bid and to annul the Bidding process and reject all Bids at any time prior to Contract Award, without thereby incurring any liability to Bidders. In case of annulment, all Bids submitted and specifically, Bid securities, shall be promptly returned to the Bidders.

**42. Standstill Period**

42.1. The Contract shall not be awarded earlier than the expiry of the Standstill Period. The Standstill Period shall be ten (10) Business Days unless extended in accordance with ITB 46. The Standstill Period commences the day after the date the Employer has transmitted to each Bidder the Notification of Intention to Award the Contract. Where only one Bid is submitted, or if this contract is in response to an emergency situation recognized by the Bank, the Standstill Period shall not apply.

**43. Notification of Intention to Award**

43.1. The Employer shall send to each Bidder the Notification of Intention to Award the Contract to the successful Bidder. The Notification of Intention to Award shall contain, at a minimum, the following information:

Project Director

(a) the name and address of the Bidder submitting the successful Bid;

(b) the Contract price of the successful Bid;

(c) the names of all Bidders who submitted Bids, and their Bid prices as readout, and as evaluated;

(d) a statement of the reason(s) the Bid (of the unsuccessful Bidder to whom the notification is addressed) was unsuccessful, unless the price information in c) above already reveals the reason;

(e) the expiry date of the Standstill Period; and

(f) instructions on how to request a debriefing and/or submit a complaint during the standstill period.

## F. Award of Contract

**44. Award Criteria**

44.1. Subject to ITB 41, the Employer shall award the Contract to the successful Bidder. This is the Bidder whose Bid has been determined to be the Most Advantageous Bid.

**45. Notification of Award**

45.1. Prior to the date of expiry of the bid validity**,** and upon expiry of the Standstill Period specified in ITB 42.1 or any extension thereof, and, upon satisfactorily addressing any complaint that has been filed within the Standstill Period, the Employer shall notify the successful Bidder, in writing, that its Bid has been accepted. The notification of award (hereinafter and in the Conditions of Contract and Contract Forms called the "Letter of Acceptance") shall specify the sum that the Employer will pay the Contractor in consideration of the execution of the Contract (hereinafter and in the Conditions of Contract and Contract Forms called "the Contract Price").

45.2. Within ten (10) Business Days after the date of transmission of the Letter of Acceptance, the Employer shall publish the Contract Award Notice which shall contain, at a minimum, the following information:

(a) name and address of the Employer;

(b) name and reference number of the contract being awarded, and the selection method used;

(c) names of all Bidders that submitted Bids, and their Bid prices as read out at Bid opening, and as evaluated;

Project Director

(d) names of all Bidders whose Bids were rejected either as nonresponsive or as not meeting qualification criteria, or were not evaluated, with the reasons therefor;

(e) the name of the successful Bidder, the final total contract price, the contract duration and a summary of its scope; and

(f) successful Bidder's Beneficial Ownership Disclosure Form, if specified in BDS ITB 47.1.

45.3. The Contract Award Notice shall be published on the Employer's website with free access if available, or in at least one newspaper of national circulation in the Employer's Country, or in the official gazette. The Employer shall also publish the contract award notice in UNDB online.

45.4. Until a formal Contract is prepared and executed, the Letter of Acceptance shall constitute a binding Contract.

**46. Debriefing by the Employer**

46.1. On receipt of the Employer's Notification of Intention to Award referred to in ITB 43.1, an unsuccessful Bidder has three (3) Business Days to make a written request to the Employer for a debriefing. The Employer shall provide a debriefing to all unsuccessful Bidders whose request is received within this deadline.

46.2. Where a request for debriefing is received within the deadline, the Employer shall provide a debriefing within five (5) Business Days, unless the Employer decides, for justifiable reasons, to provide the debriefing outside this timeframe. In that case, the standstill period shall automatically be extended until five (5) Business Days after such debriefing is provided. If more than one debriefing is so delayed, the standstill period shall not end earlier than five (5) Business Days after the last debriefing takes place. The Employer shall promptly inform, by the quickest means available, all Bidders of the extended standstill period.

46.3. Where a request for debriefing is received by the Employer later than the three (3)-Business Day deadline, the Employer should provide the debriefing as soon as practicable, and normally no later than fifteen (15) Business Days from the date of publication of Public Notice of Award of contract. Requests for debriefing received outside the three (3)-day deadline shall not lead to extension of the standstill period.

Project Director

46.4. Debriefings of unsuccessful Bidders may be done in writing or verbally. The Bidder shall bear their own costs of attending such a debriefing meeting.

**47. Signing of Contract**

47.1. The Employer shall send to the successful Bidder the Letter of Acceptance including the Contract Agreement, and, if specified in the BDS, a request to submit the Beneficial Ownership Disclosure Form providing additional information on its beneficial ownership. The Beneficial Ownership Disclosure Form, if so requested, shall be submitted within eight (8) Business Days of receiving this request.

47.2. The successful Bidder shall sign, date and return to the Employer the Contract Agreement within twenty-eight (28) days of its receipt.

**48. Performance Security**

48.1. Within twenty-eight (28) days of the receipt of the Letter of Acceptance from the Employer, the successful Bidder shall furnish the Performance Security and if required in the BDS, the Environmental and Social (ES) Performance Security in accordance with the General Conditions of Contract, subject to ITB 38.2(b), using for that purpose the Performance Security and ES Performance Security Forms included in Section X, Contract Forms, or another form acceptable to the Employer. If the Performance Security furnished by the successful Bidder is in the form of a bond, it shall be issued by a bonding or insurance company that has been determined by the successful Bidder to be acceptable to the Employer. A foreign institution providing a bond shall have a correspondent financial institution located in the Employer's Country, unless the Employer has agreed in writing that a correspondent financial institution is not required.

48.2. Failure of the successful Bidder to submit the above-mentioned Performance Security and if required in the BDS, the Environmental and Social (ES) Performance Security, or sign the Contract shall constitute sufficient grounds for the annulment of the award and forfeiture of the Bid Security. In that event the Employer may award the Contract to the Bidder offering the next Most Advantageous Bid.

**49. Procurement Related Complaint**

49.1. The procedures for making a Procurement-related Complaint are as specified in the BDS.

Project Director

# Section II - Bid Data Sheet (BDS)

The following specific data for the Works to be procured shall complement, supplement, or amend the provisions in the Instructions to Bidders (ITB). Whenever there is a conflict, the provisions herein shall prevail over those in ITB.

| A. General | |
|---|---|
| **ITB 1.1** | The reference number of the Request for Bids (RFB) is: **SRCTIP-DOR-W-NNM-ICB-1**<br>The name of the RFB is: **Improvement of Nagdunga-Naubise Section of Tribhuvan Highway (Km 0+000 – Km 12+260)**<br>Contract Identification No.**: SRCTIP-DOR-W-NNM-ICB-1 [Lot 1]**<br>The number and identification of lots (contracts) comprising a single Package 1 are as follows. A seperate bidding document is available for ICB-2.<br>i) Improvement of Nagdunga-Naubise section (Km 0+000 to Km 12+260) of Tribhuvan Highway SRCTIP-DOR-W-NNM-ICB-1 [Lot 1]<br>ii) Improvement of Naubise-Malekhu section (Km 0+000 to Km 43+542)of Prithvi Highway SRCTIP-DOR-W-NNM-ICB-2 [Lot 2] |
| **ITB 2.1** | The Borrower is: **Government of Nepal**<br>Loan or Financing Agreement amount: **US$ 450 Million**<br>The name of the Project is: **Strategic Road Connectivity and Trade Improvement Project** |
| **ITB 4.1** | Maximum number of members in the JV shall be: **Three (3). However, bids shall be submitted by the same entities, whether single or JV and in case of a JV comprising of the same members of the JV, as prequalified and approved by the Employer.** |
| **ITB 4.5** | A list of debarred firms and individuals is available on the Bank's external website: http://www.worldbank.org/debarr. |
| **B. Contents of Bidding Document** | |
| **ITB 7.1** | For **Clarification of Bid purposes** only, the Employer's address is:<br>Attention: Project Director<br>Address: Strategic Road Connectivity and Trade Improvement Project, Jwagal, Lalitpur |

Project Director

| | |
|---|---|
| | City: Lalitpur<br>ZIP Code:<br>Country: Nepal<br>Telephone: +977-1-5541686<br>Electronic mail address: **dorfcb@dor.gov.np** |
| **ITB 7.4** | A Pre-Bid meeting **shall** take place at the following date, time and place:<br>Date: **21 October, 2021**<br>Time: **11:30 hours (Nepal Standard Time)**<br>Place: **Department of Roads, Chakupat, Lalitpur**<br>A site visit conducted by the Employer **shall not be** organized. |
| **ITB 7.6** | Web page: www.dor.gov.np/home/notices |
| **C. Preparation of Bids** | |
| **ITB 10.1** | The language of the Bid is: **English**.<br>All correspondence exchange shall be in **English** language.<br>Language for translation of supporting documents and printed literature is **English.** |
| **ITB 11.1 (h)** | The Bidder shall submit the following additional documents in its Bid:<br>**Code of Conduct for Contractor's Personnel (ES)**<br>The Bidder shall submit its Code of Conduct that will apply to Contractor's Personnel (as defined in Sub-Clause 1.1.17 of the General Conditions of Contract), to ensure compliance with the Contractor's Environmental and Social (ES) obligations under the Contract. The Bidder shall use for this purpose the Code of Conduct form provided in Section IV. No substantial modifications shall be made to this form, except that the Bidder may introduce additional requirements, including as necessary to take into account specific Contract issues/risks.<br>**Management Strategies and Implementation Plans (MSIP) to manage the (ES) risks**<br>The Bidder shall submit Management Strategies and Implementation Plans (MSIPs) to manage the following key Environmental and Social (ES) risks:<br>• Contractors Environmental and Social Management Plan (ESMP);<br>• Traffic Management Plan to ensure safety of local communities from construction traffic; |

Project Director

| | |
|---|---|
| | • Sexual Exploitation and Abuse and Sexual Harassment (SEA/SH) prevention and response action plan;<br>• Spoil disposal management plan and stockpiling plan to minimize the impact during construction and rehabilitate landscape after construction;<br>• Air and Noise Quality Management Plan to minimize vehicle emissions, manage fugitive dust, noise and vibration during construction;<br>• Solid Waste Management Plan to manage solid wastes (including hazardous wastes) during road construction and operations;<br>• Quarrying of materials, restoration and burrow pit management plan;<br>• Occupational Health and Safety Plan;<br>• Workers Camp Management Plan;<br>• Community Health and safety plan;<br>• Emergency preparedness plan including accident and incident reporting and management plan; |
| **ITB 12.1** | The letter of bid without the total bid amount shall be considered non responsive and shall be rejected. |
| **ITB 13.1** | ITB 13 is not applicable. Alternative Bids shall not be permitted. |
| **ITB 13.2** | Alternative times for completion **shall not be** permitted. |
| **ITB 13.4** | Alternative technical solutions shall be permitted for the following parts of the Works: **Not applicable** |
| **ITB 14.5** | The prices quoted by the Bidder shall be **subject to adjustment** |
| **ITB 15.1** | The currency(ies) of the Bid and the payment currency(ies) shall be in accordance with **Alternative A** as described below:<br>**Alternative A (Bidders to quote entirely in local currency):**<br>(a) The unit rates and the prices shall be quoted by the Bidder in the Bill of Quantities, entirely in **Nepalese Rupees** and further referred to as "the local currency". A Bidder expecting to incur expenditures in other currencies for inputs to the Works supplied from outside the Employer's country (referred to as "the foreign currency requirements") shall indicate in the Appendix to Bid - Table C, the percentage(s) of the Bid Price (excluding Provisional Sums), needed by the Bidder for the payment of such foreign currency requirements, limited to no more than three foreign currencies. |

Project Director

| | |
|---|---|
| | (b) The rates of exchange to be used by the Bidder in arriving at the local currency equivalent and the percentage(s) mentioned in (a) above shall be specified by the Bidder in the Appendix to Bid - Table C, and shall apply for all payments under the Contract so that no exchange risk will be borne by the successful Bidder. |
| **ITB 18.1** | **The Bid shall be valid until: 11 March, 2022** |
| **ITB 18.3 (a)** | The Bid price shall be adjusted by the following factor(s): **Not Applicable** |
| **ITB 19.1** | A bid security shall be required.<br>For Lot-1:<br>The amount and currency of the bid security shall be **NPR 41,500,000.00 or** USD **348,500.00** from a commercial bank.<br>Bid security issued by a foreign bank shall be **counter guaranteed** by "A" class commercial bank established in Nepal. |
| **ITB 19.3 (a)** | Bid security shall be in the form of an **unconditional and irrecovable guarantee** issued by a bank as per the form provided in section IV Bidding Forms Form of Bid Security – Demand Guarantee. |
| **ITB 19.3 (b)** | **Not Applicable** |
| **ITB 19.3 (c)** | **Not Applicable** |
| **ITB 19.3 (d)** | Other types of acceptable securities: **None** |
| **ITB 20.1** | In addition to the original of the Bid, the number of copies is: **One (1)**<br>In case of e-submission of bid:<br>The Bidder shall submit the bid electronically in PDF files in the manner as specified in ITB Clause 22.1, and submission of hard copy of "original bid plus one copy of bid" (as stated above) is not required. |
| **ITB 20.3** | The written confirmation of authorization to sign on behalf of the Bidder shall consist of:<br>a. The name and description of the documentation required to demonstrate the authority of the signatory to sign the Bid such as a Power of Attorny; and |

Project Director

| | |
|---|---|
| | In the case of Bids submitted by an existing or intended JV an undertaking signed by all parties (i) stating that all parties shall be jointly and severally liable, if so required in accordance with ITB 4.1, and (ii) nominating a Representative who shall have the authority to conduct all business for and on behalf of any and all the parties of the JV during the bidding process and, during contract execution in the event the JV is awarded the Contract. |
| **D. Submission and Opening of Bids** | |
| **ITB 22.1** | For **Bid submission purposes** only, the Employer's address is:<br>Attention: Project Director<br>Address: Strategic Road Connectivity and Trade Improvement Project, Jwagal, Lalitpur<br>City: Lalitpur<br>ZIP Code:<br>Country: Nepal<br>Telephone: +977-1-5541686<br>Electronic mail address: **dorfcb@dor.gov.np**<br>The deadline for Bid submission is:<br>Date: **11 November, 2021**<br>Time: **12:00 hours (Nepal Standard Time)**<br>In addition to the **Hard Copy** submission as an alternative the Employer shall use the **electronic-procurement** system to manage this Bidding process.<br>**The electronic bid (through e-GP) submission procedures shall be as follows:**<br>i. For e-submission, the bidder is required to register in the e-GP portal https://www.bolpatra.gov.np for downloading and submitting the bid electronically.<br>ii. Interested prequalified bidder may either purchase the bidding documents from the Employer's office as specified in the Request for Bids (RFB) or bidders registered in the e-GP portal of Public Procurement Monitoring Office (PPMO) may download the bidding document from http://www.bolpatra.gov.np after login. If bidders choose to download the bidding document and submit the bidding documents electronically, then the cost of the bidding document shall be deposited as specified in RFB. In addition, electronic scanned copy (.pdf format) of the bank deposit voucher/cash receipt should also be submitted along with the electronic bid submission files.<br>iii. The bidder shall then prepare/fill the documents and forms included in the issued bidding documents or the downloaded bidding documents from the e-GP portal of PPMO http://www.bolpatra.gov.np as |

Project Director

applicable. The required documents and forms shall be prepared in PDF form in the e-GP system as specified below:

| S. N. | Document | Requirement[1] | Remarks |
|---|---|---|---|
| 1 | Letter of Bid | Mandatory | PDF |
| 2 | Power of Attorney of bid submission signatory | Mandatory | PDF |
| 3 | Bank Voucher for cost of bid document | Mandatory | PDF |
| 4 | Joint venture agreement under an existing agreement or with the intent to enter into such an agreement supported by a letter of intent | Mandatory (in case of JV only) | PDF |
| 5 | Qualification Information | Mandatory | PDF (Experience as per section III) |
| 6 | Additional Document , if any | Mandatory | PDF |

**Note:**

(a) Bidders (all partners in case of JV) should verify/update their profile documents as appropriate for the specific bid before submitting their bid electronically.

(b) The Bidder shall then upload the PDF bid files and submit the complete bid document through e-GP portal of PPMO- http://www.bolpatra.gov.np within the specified date and time as mentioned in the PPMO website.

(c)Biders are advised to download the bid submission report to ensure that all the documents/ files are up to date and complete.

(d) The Bidders shall meet the following requirements and conditions for e-submission of bids;

[1] these requirements are equally applicable for hardcopy submission too.

Project Director

| | |
|---|---|
| | aa) The facility for submission of bids electronically through e-submission is to promote transparency, non-discrimination, equality of access, and open competition in the application process. The Bidders are fully responsible to use the e- submission facility properly in e-GP portal of PPMO- http://www.bolpatra.gov.np as per specified procedures and in no case the Employer shall be held liable for Bidder's inability to use this facility.<br><br>When a Bidder submits electronic application through the PPMO e-GP portal, it is assumed that the bidder has prepared the bid by studying and examining the complete set of the bidding documents. Bidders who submit electronic bid should deposit the bidding document fee as specified in RFB and upload the scan copy (in pdf format) of the deposit voucher at the time of bid submission. The deposited amount shall be verified by the Employer during the evaluation process. Bidders are cautioned to ensure that they provide evidence of payment for the cost of the Bidding Document along with their bid failing which the Employer may decide to reject such bid.<br><br>In case of e-submission, discount offered in scan copy of Letter of Bid and e-GP system, the discount mentioned in Letter of Bid shall previl, if any. |
| **ITB 25.1** | The Bid opening shall take place at:<br><br>Address: Strategic Road Connectivity and Trade Improvement Project, Jwagal, Lalitpur<br><br>City: Lalitpur<br><br>Country: Nepal<br><br>Telephone: +977-1-5541686<br><br>Electronic mail address: **dorfcb@dor.gov.np**<br><br>Date: **11 November, 2021**<br><br>Time: **14:00 hours (Nepal Standard Time)** |
| **ITB 25.1** | The electronic Bid opening procedures shall be:<br><br>E-submitted bids will be downloaded from PPMO's e-GP portal and opening will be performed along with the hard copy submission. |
| **ITB 25.6** | The Letter of Bid and priced Bill of Quantities shall be initialed by representatives of the Employer and the Bidder conducting Bid opening. Any modification to the unit or total price shall be initialed by the Representatives who choose to attend the Bid opening. |
| **E. Evaluation, and Comparison of Bids** | |
| **ITB 32.1** | The currency that shall be used for Bid evaluation and comparison purposes to convert at the selling exchange rate all Bid prices expressed in various |

Project Director

| | |
|---|---|
| | currencies into a single currency is: **Nepalese Rupees.**<br>The source of exchange rate shall be: **Nepal Rastra Bank – Selling Rate.**<br>The date for the exchange rate shall be*: **28 days prior to submission of bid.***<br>The currency(ies) of the Bid shall be converted into a single currency in accordance with the procedure under **Alternative A** that follows:<br>***Alternative A: Bidders quote entirely in local currency***<br>For comparison of Bids, the Bid Price, corrected pursuant to ITB 31, shall first be broken down into the respective amounts payable in various currencies by using the selling exchange rates specified by the Bidder in accordance with ITB 15.1.<br>In the second step, the Employer will convert the amounts in various currencies in which the Bid Price is payable (excluding Provisional Sums but including Daywork where priced competitively) to the single currency identified above at the selling rates established for similar transactions by the authority specified and on the date stipulated above. |
| **ITB 33.1** | A margin of domestic preference **7.5% shall** apply.<br>**The application methodology will be as per Section III, Evaluation and Qualification Criteria.** |
| **ITB 34.1** | At this time the Employer **does not intend** to execute certain specific parts of the Works by subcontractors selected in advance. |
| **ITB 34.2** | Contractor's proposed subcontracting:Maximum percentage of subcontracting permitted is: **25% of the total contract amount.** Bidders planning to subcontract more than 10% of total volume of work shall specify, in the Letter of Bid, the activity (ies) or parts of the Works to be subcontracted along with complete details of the Subcontractors and their qualification and experience. |
| **ITB 35.2** | **Not Applicable** |
| **F. Award of Contract** | |
| **ITB 47.1** | The successful Bidder **shall** submit the Beneficial Ownership Disclosure Form. |
| **ITB 48.1 and 48.2** | The successful Bidder shall be required to submit an Environmental and Social (ES) Performance Security. |

Project Director

| | |
|---|---|
| **ITB 49.1** | The procedures for making a Procurement-related Complaint are detailed in the **"Procurement Regulations for IPF Borrowers** (Annex III)." If a Bidder wishes to make a Procurement-related Complaint, the Bidder shall submit its complaint following these procedures, In Writing (by the quickest means available, such as by email or fax), to:<br>For the attention: **Mr. Ram Hari Pokharel**<br>Title/position: **Project Director**<br>Employer: **Department of Roads, Development Cooperation Implementation Division, Strategic Road Connectivity and Trade Improvement Project**<br>Email address: **dorfcb@dor.gov.np**<br>In summary, a Procurement-related Complaint may challenge any of the following:<br>**1.** the terms of the Bidding Documents; and<br>**2.** the Employer's decision to award the contract. |

Project Director

# Section III - Evaluation and Qualification Criteria

This section contains all the criteria that the Employer shall use to evaluate Bids of qualified Bidders. No other factor methods or criteria shall be used other than specified in this bidding document. The Bidder shall provide all the information requested in the forms included in Section IV, Bidding Forms.

Wherever a Bidder is required to state a monetary amount, Bidders should indicate the USD equivalent using the rate of exchange determined as follows:

- For construction turnover or financial data required for each year - Exchange rate prevailing on the last day of the respective calendar year (in which the amounts for that year is to be converted) was originally established.
- Value of single contract - Exchange rate prevailing on the date of the contract.

Exchange rates shall be taken from the publicly available source identified in the ITB 32.1. Any error in determining the exchange rates in the Bid may be corrected by the Employer.

Project Director

## a. Technical and Financial Evaluation

1.1 Evaluation of Technical Proposal

In addition to the criteria listed in ITB 35.3 (a) – (e) the following criteria shall apply

**Assessment of adequacy of Technical Proposal with Requirements** in accordance with **ITB 35.1.**

1.2 Techinical Proposal Scoring Methology**:** ***Not Applicable***
1.3 Sustainable Procurement**:** ***Not Applicable***
1.4 Alternative Technical Solutions for specified parts of the Works: ***Not Applicable***

**2. Financial Evaluation**

2.1 **Margin of Preference**

If the BDS so specifies, the Employer will grant a margin of preference of 7.5% (seven and one-half percent) to domestic contractors, in accordance with, and subject to, the following provisions:

i. Contractors applying for such preference shall be asked to provide, as part of the data for qualification, such information, including details of ownership, as shall be required to determine whether, according to the classification established by the Borrower and accepted by the Bank, a particular contractor or group of contractors qualifies for a domestic preference. The Bidding document shall clearly indicate the preference and the method that will be followed in the evaluation and comparison of Bids to give effect to such preference.
ii. After Bids have been received and reviewed by the Employer, responsive Bids shall be classified into the following groups:
   (a) Group A: Bids offered by domestic contractors eligible for the preference.
   (b) Group B: Bids offered by other contractors.

All evaluated Bids in each group shall, as a first evaluation step, be compared to determine the Most Advantageous Bid, and the Most Advantageous Bid in each group shall be further compared with each other. If a result of this comparison, a Bid from Group A is the Most Advantageous Bid, it shall be selected for the award, if the Bidder is qualified. If a Bid from Group B is the Most Advantageous Bid, as a second evaluation step, all Bids from Group B shall then be further compared with the Most Advantageous Bid from Group A. For the purpose of this further comparison only, an amount equal to 7.5% (seven and one-half percent) of the respective Bid price corrected for arithmetical errors, including unconditional discounts but excluding provisional sums and the cost of day works, if any, shall be added to the evaluated cost offered in each Bid from Group B. If the Bid from Group A is the Most Advantageous Bid, it shall be selected for award. If not, the Most Advanatgeous Bid from Group B based on the first evaluation step shall be selected.

Project Director

### 2.2 Criteria for Financial Evaluation

In addition to the criteria listed in ITB 35.3 (a) – (e) the following criteria shall apply:

**(a)** Time Schedule

Time for completion of the Works from the Commencment Date shall be as specified in the Particular Conditions Part A-Contract Data Sub-clause 1.1.84. No credit will be given for earlier completion.

**(b)** Life Cycle Costs

**Life cycle costing shall not apply.**

## 3. Combined Evaluation : Not Applicable

## 4. Multiple Contracts

If permitted under ITB 35.5, will be evaluated as follows:

**Award Criteria for Multiple Contracts [ITB 35.5]:**

(a) **When rated criteria is not applied**

Lots

The Package contains two lots namely, Contract No. SRCTIP-DOR-W-NNM-ICB-1(lot 1) & Contract No. SRCTIP-DOR-W-NNM-ICB-2 (lot 2). Bidders have the option to Bid for lot 1, or lot 2, or both lots 1 and 2 for which they were prequalified. Bids will be evaluated lot-wise, taking into account discounts offered, if any, only by those bidders that were prequalified for combination of both lots, for award of both lots. The contract(s) will be awarded to the Bidder or Bidders offering the lowest evaluated cost to the Employer for combined lots, subject to the selected Bidder(s) continuing to meet the criteria used at the time of prequalification based on updated information as per paragraph 5.1, for lot or combination of lots, as the case may be, for which they were prequalified. A bidder prequalified for individual lots 1 and 2 but not for combination of both lots, if determined successful for both the lots individually, the Employer will decide which of the two lots will be awarded to the bidder based on the total lowest evaluated cost to the Employer for the Package comprising of both lots.

(b) **When rated criteria is applied: Not Applicable**

## 5. Qualification

### 5.1 Update of Information

The Bidder shall update information on its Qualification and demonstrate that it continues to meet the criteria based on which it was prequalified. The Bidder shall complete the relevant Forms in Section IV, Bidding Forms.

Project Director

## 5.2 Specialized Subcontractors

Only the Specialized Subcontractors as approved by the Employer will be considered. The Specialized Subcontractor shall continue to meet the criteria used at the time of prequalification. The general experience and financial resources of the Specialized Subcontractors shall not be added to those of the Bidder for purposes of qualification of the Bidder.

## 5.3 Financial Resources

Using the relevant Form 3.1 in Section IV, Bidding Forms, the Bidder must demonstrate access to, or availability of, financial resources such as liquid assets, unencumbered real assets, lines of credit, and other financial means, other than any contractual advance payments to meet the overall cash flow requirements for this Contract(s) for which it was prequalified and its current Works commitment.

## 5.4 Contractor's Representative and Key Personnel

The Bidder must demonstrate that it will have a suitably qualified Contractor's Representative and suitably qualified (and in adequate numbers) Key Personnel, as described in the Specification.

The Bidder shall provide details of the Contractor's Representative and Key Personnel and such other Key Personnel that the Bidder considers appropriate to perform the Contract, together with their academic qualifications and work experience. The Bidder shall complete the relevant Forms in Section IV, Bidding Forms.

## 5.5 Equipment

The Bidder must demonstrate that it has access to the key equipments listed hereafter:

**For the Award of Contract No. SRCTIP-DOR-W-NNM-ICB-1 (lot-1)**

| S/N | Type of Plant/Equipment | Number |
|---|---|---|
| 1 | Cement Concrete batching plant (min capacity 25 cum per hour) | 1 |
| 2 | Asphalt Concrete Hot Mix Plant (min Capacity 90 Tonne per hour) | 1 |
| 3 | Asphalt Paving Machine (Hopper capacity min 4 cum) | 1 |

**For the Award of Contract No. SRCTIP-DOR-W-NNM-ICB-1 and 2 both (lot-1 &2)**

| S/N | Type of Plant/Equipment | Number |
|---|---|---|
| 1 | Cement Concrete batching plant (min capacity 25 cum per hour) | 3 |

Project Director

| | | |
|---|---|---|
| 2 | Asphalt Concrete Hot Mix Plant (min Capacity 90 Tonne per hour) | 3 |
| 3 | Asphalt Paving Machine (Hopper capacity min 4 cum) | 3 |

Note:

Less number may be accepted if cumulative capacity is equal or more than indicated.

Project Director

# Section IV - Bidding Forms

## Table of Forms

**Letter of Bid …… ….50**
**Appendix to Bid …… …54**
Schedule of Cost Indexation .....54
Table A. Local Currency.....55
Table B. Foreign Currency (FC).....56
Table C. Summary of Payment Currencies.....57

**Bill of Quantities**.....58
Daywork Schedule .....60

**Technical Proposal.....62**
Site Organization .....63
Method Statement .....64
Mobilization Schedule .....65
Construction Schedule .....66
ES Management Strategies and Implementation Plans .....67
Code of Conduct for Contractor's Personnel (ES) Form.....68
Form EQU: Equipment .....72
Form PER -1 .....73
Form PER-2: .....76
Form ELI -1.1 .....79
Form ELI -1.2 .....80
Form CON – 2 .....81
Form CON – 3 .....83
Form CON – 4 .....85
Sexual Exploitation and Abuse (SEA) and/or Sexual Harassment Performance Declaration .....85
Form FIN – 3.1 .....87
Form FIN - 3.2 .....89
Form FIN – 3.4: .....90

**Form of Bid Security – Demand Guarantee ……..……91**

Project Director

# Letter of Bid

*INSTRUCTIONS TO BIDDERS: DELETE THIS BOX ONCE YOU HAVE COMPLETED THE DOCUMENT*

*The Bidder must prepare this Letter of Bid on stationery with its letterhead clearly showing the Bidder's complete name and business address.*

*Note: All italicized text in is to help Bidders in preparing this form.*

**Date of this Bid submission**: [*insert date (as day, month and year) of Bid submission*]

**Request for Bid No**.: [*insert identification*]

To:

The **Department of Roads,**

**Development Cooperation Implementation Division**

**Strategic Road Connectivity and Trade Improvement Project,**

**Jwagal, Lalitpur**

We, the undersigned, declare that:

(a) **No reservations:** We have examined and have no reservations to the bidding document, including Addenda issued in accordance to ITB 8;

(b) **Eligibility:** We meet the eligibility requirements and have no conflict of interest in accordance with ITB 4;

(c) **Bid-Securing Declaration:** We have not been suspended nor declared ineligible by the Employer based on execution of a Bid-Securing or Proposal-Securing Declaration in the Employer's country in accordance with ITB 4.7;

(d) **Sexual Exploitation and Abuse (SEA) and/or Sexual Harassment (SH):** [*select the appropriate option from (i) to (v) below and delete the others*].

We *[where JV, insert:* "including any of our JV members"*]*, and any of our subcontractors:

(i) [have not been subject to disqualification by the Bank for non-compliance with SEA/ SH obligations.]

(ii) [are subject to disqualification by the Bank for non-compliance with SEA/ SH obligations.]

(iii) [had been subject to disqualification by the Bank for non-compliance with SEA/ SH obligations. An arbitral award on the disqualification case has been made in our favor.]

Project Director

(iv) [had been subject to disqualification by the Bank for non-compliance with SEA/ SH obligations for a period of two years. We have subsequently provided and demonstrated that we have adequate capacity and commitment to comply with SEA and SH prevention and response obligations.]

(v) [had been subject to disqualification by the Bank for non-compliance with SEA/ SH obligations for a period of two years. We have attached documents demonstrating that we have adequate capacity and commitment to comply with SEA and SH prevention and response obligations.]

(e) **Conformity:** We offer to execute in conformity with the bidding document and in accordance with the construction schedule the following Works: *[insert a brief description of the Works];*

(f) **Bid Price:** The total price of our Bid, excluding any discounts offered in item (g) below is: *[Insert one of the options below as appropriate]*

(i) Total price of our bid for Lot 1 (Contract No. SRCTIP-DOR-W-NNM-ICB-1) is **NPR** ..... [*insert the total price in words and figures*]; and

(ii)[1] Total price of our bid for Lot 1 (Contract No. SRCTIP-DOR-W-NNM-ICB-1) & Lot 2 (Contract No. SRCTIP-DOR-W-NNM-ICB-2) is **NPR** ..... [*insert the total price of all lots in words and figures*]. Bidder shall ensure that the total amount indicated herein for both lots is the correct aggregation of total amounts as indicated separately under Letters of Bid for individual lots 1 and Lot 2. In case of any discrepancies in the total amounts, the total amount for individual lots as indicated in each Letter of Bid shall prevail subject to provisions under ITB 31 for arithmetical correction;

(g) **Discounts:** The discounts offered and the methodology for their application are:

(i)We offer an unconditional discount of .....% in unit rates of Contract No. SRCTIP-DOR-W-NNM-ICB-1,
(ii)[1] WE offer a discount of .....% in unit rates of both the Contracts , if we are awarded both the Contracts SRCTIP-DOR-W-NNM-ICB-1 & SRCTIP-DOR-W-NNM-ICB-2.[2]

iii) The exact method of calculations to determine the net price after application of discounts is shown below which shall prevail in case of any discrepancies in net amounts derived based on percentage discounts indicated above and the method used to apply the discount: [*Specify in detail the method that shall be used to apply the discounts*];

iv) We understand that any serious discrepancies noted by the Employer under items (f) and/or (g) may render our bid non-responsive

(h) **Bid Validity**: Our Bid shall be valid until *[insert day, month and year in accordance with ITB 18.1]*, and it shall remain binding upon us and may be accepted at any time before the expiration of that period;

---

[1] Applicable only for those Bidders that have been prequalified for both contracts combined (lot1 and lot2).

[2] If offered discount for awarding both contracts is found different in the letter of bid of Contract No. SRCTIP-DOR-W-NNM-ICB-1 and Contract No. SRCTIP-DOR-W-NNM-ICB-2, then the higher value of offered discount shall be considered.

Project Director

(i) **Performance Security**: If our Bid is accepted, we commit to obtain a Performance Security *and an Environmental and Social (ES) Performance Security,* in the forms in accordance with the bidding document;

(j) **One Bid Per Bidder:** We are not submitting any other Bid(s) as an individual Bidder, and we are not participating in any other Bid(s) as a Joint Venture member or as a subcontractor, and meet the requirements of ITB 4.3, other than alternative Bids submitted in accordance with ITB 13;

(k) **Suspension and Debarment**: We, along with any of our subcontractors, suppliers, consultants, manufacturers, or service providers for any part of the contract, are not subject to, and not controlled by any entity or individual that is subject to, a temporary suspension or a debarment imposed by the World Bank Group or a debarment imposed by the World Bank Group in accordance with the Agreement for Mutual Enforcement of Debarment Decisions between the World Bank and other development banks. Further, we are not ineligible under the Employer's country laws or official regulations or pursuant to a decision of the United Nations Security Council;

(l) **State-owned enterprise or institution:** [*select the appropriate option and delete the other*] [*We are not a state-owned enterprise or institution*] / [*We are a state-owned enterprise or institution but meet the requirements of ITB 4.6*];

(m) **Commissions, gratuities, fees:** We have paid, or will pay the following commissions, gratuities, or fees with respect to the Bidding process or execution of the Contract: *[insert complete name of each Recipient, its full address, the reason for which each commission or gratuity was paid and the amount and currency of each such commission or gratuity]*

| Name of Recipient | Address | Reason | Amount |
|---|---|---|---|
| _____ | _____ | _____ | _____ |
| _____ | _____ | _____ | _____ |
| _____ | _____ | _____ | _____ |
| _____ | _____ | _____ | _____ |

(If none has been paid or is to be paid, indicate "none.")

(n) **Binding Contract:** We understand that this Bid, together with your written acceptance thereof included in your Letter of Acceptance, shall constitute a binding contract between us, until a formal contract is prepared and executed;

(o) **Not Bound to Accept**: We understand that you are not bound to accept the lowest evaluated cost Bid, the Most Advantageous Bid or any other Bid that you may receive;

(p) **Fraud and Corruption:** We hereby certify that we have taken steps to ensure that no person acting for us or on our behalf engages in any type of Fraud and Corruption;

Project Director

(q) **Potential DAAB Members:** We hereby propose the following three persons, whose curriculum vitae are attached, as potential DAAB members:

| Name | Address |
|---|---|
| 1. ……..... | |
| 2. …….. | |
| 3. …… | |

**Name of the Bidder**:*[*insert name of the Bidder*]

**Name of the person duly authorized to sign the Bid on behalf of the Bidder**:**[*insert complete name of person duly authorized to sign the Bid*]

**Title of the person signing the Bid**: [*insert complete title of the person signing the Bid*]

**Signature of the person named above**: [*insert signature of person whose name and capacity are shown above*]

**Date signed** [*insert date of signing*] **day of** [*insert month*], [*insert year*]

Date signed _____ day of _____, _____

*****: In the case of the Bid submitted by joint venture specify the name of the Joint Venture as Bidder

**: Person signing the Bid shall have the power of attorney given by the Bidder to be attached with the Bid

Project Director

# Appendix to Bid

## Schedule of Cost Indexation

*[The formulae for price adjustment shall be of the following general type:]*

**Pn= a + b Ln / Lo + c En/ Eo + d Mn/Mo + .....**

*where:*

"Pn" is the adjustment multiplier to be applied to the estimated contract value in the relevant currency of the work carried out in period "n", this period being a month unless otherwise stated in the Contract Data;

"a" is a fixed coefficient, stated in the relevant table of adjustment data, representing the non-adjustable portion in contractual payments;

"b", "c", "d", ... are coefficients representing the estimated proportion of each cost element related to the execution of the Works as stated in the relevant table of adjustment data; such tabulated cost elements may be indicative of resources such as labour, equipment and materials;

"Ln", "En", "Mn", ... are the current cost indices or reference prices for period "n", expressed in the relevant currency of payment, each of which is applicable to the relevant tabulated cost element on the date 49 days prior to the last day of the period (to which the particular Payment Certificate relates); and

"Lo", "Eo", "Mo", ... are the base cost indices or reference prices, expressed in the relevant currency of payment, each of which is applicable to the relevant tabulated cost element on the Base Date.

The cost indices or reference prices stated in the Table of Adjustment Data shall be used. If their source is in doubt, it shall be determined by the Engineer. For this purpose, reference shall be made to the values of the indices at stated dates (quoted in the fourth and fifth columns respectively of the table).

If the currency in which the Contract price is expressed is different from the currency of the country of origin of the indices, a correction factor will be applied to avoid incorrect adjustments of the Contract price. The correction factor shall be: $Z_0$ / $Z_1$, where,

$Z_0$ = the number of units of currency of the origin of the indices which equal to one unit of the currency of the Contract Price on the Base date, and

$Z_1$ = the number of units of currency of the origin of the indices which equal to one unit of the currency of the Contract Price on the Date of Adjustment.

Project Director

# Table of Adjustment Data

[In Tables A, B, and C, below, the Bidder shall (a) indicate its amount of local currency payment, (b) indicate its proposed source and base values of indices for the different foreign currency elements of cost, (c) derive its proposed weightings for local and foreign currency payment, and (d) list the exchange rates used in the currency conversion. In the case of very large and/or complex works contracts, it may be necessary to specify several families of price adjustment formulae corresponding to the different works involved.]

## Table A. Local Currency

| Index code* | Index description* | Source of index* | Base value and date* | Bidder's related currency amount | Range of weighing | Bidder's proposed weighting |
|---|---|---|---|---|---|---|
| A | Nonadjustable | — | — | — | A: 0.15 | 0.15 |
| B | Construction Labour | Nepal Rastra Bank (National Salary and Wage Rate Index - Construction Labour ) | 28 days prior to deadline of submission of bids | | B: 0.15 - 0.25 | |
| C | Fuel, Oil and Lubricants | Nepal Oil Corporation (Diesel price, Thankot) | 28 days prior to deadline of submission of bids | | C: 0.10 - 0.25 | |
| D | Bitumen | Nepal Rastra Bank (National Wholesale Price Index – Construction Material) | 28 days prior to deadline of submission of bids | | D: 0.10 – 0.20 | |
| E | Cement | Nepal Rastra Bank (National Wholesale Price Index – Construction Material) | 28 days prior to deadline of submission of bids | | E: 0.05 – 0.15 | |
| F | Reinforcement Steel | Nepal Rastra Bank (National Wholesale Price Index – Construction Material) | 28 days prior to deadline of submission of bids | | F: 0.05 – 0.15 | |
| G | Other Construction Materials (Aggregates, Sand) | Nepal Rastra Bank (National Wholesale Price Index – Overall Index) | 28 days prior to deadline of submission of bids | | G: 0.10-0.25 | |
| | | | Total | | | 1.00 |

Note:

1. The Bidder will be required to specify weightings within the range such that the total weightings = 1.00.

Project Director

# Table B. Foreign Currency (FC)

**State type:** ..... [If the Bidder is allowed to receive payment in foreign currencies this table shall be used. If Bidder wishes to quote in more than one foreign currency (up to three currencies permitted) then this table should be repeated for each foreign currency.]

| Index code | Index description | Source of index | Base value and date | Bidder's related source currency in type/amount | Equivalent in FC1 | Bidder's proposed weighting |
|---|---|---|---|---|---|---|
| **A** | Nonadjustable | — | — | — | | **A: 0.15** |
| **B** | Construction labour | | | | | **B:** _____ |
| **C** | Fuel, Oil and Lubricants | | | | | **C:** _____ |
| **D** | Bitumen | | | | | **D:** _____ |
| **E** | Cement | | | | | **E:** _____ |
| **F** | Reinforcement Steel | | | | | **F:** _____ |
| **G** | Other Construction Materials (Aggregates, Sand, etc) | | | | | **G:** _____ |
| | | | | **Total** | | **1.00** |

Note:

1. The Bidder shall complete the above table for indices as applicable.
2. The Bidder will be required to specify weightings within the range such that the total weightings = 1.00.

Project Director

# Table C. Summary of Payment Currencies

Table: Alternative A

| Name of payment currency | A<br>Amount of currency | B<br>Rate of exchange<br>(local currency per unit of foreign) | C<br>Local currency equivalent<br>C = A x B | D<br>Percentage of Total Bid Price (TBP)<br>100xC / TBP |
|---|---|---|---|---|
| **Local currency** _____ | | **1.00** | | |
| **Foreign currency #1** _____ | | | | |
| **Foreign currency #2** _____ | | | | |
| **Foreign currency #3** _____ | | | | |
| **Total Bid Price** | | | | **100.00** |
| **Provisional sums expressed in local currency** | 93,000,000.00 | **1.00** | 93,000,000.00 | |
| **TOTAL BID PRICE (including provisional sum)** | | | | |

Project Director

# Bill of Quantities

## A. Preamble

1. The Bill of Quantities shall be read in conjunction with the Instructions to Bidders, General and Particular Conditions, Technical Specifications, and Drawings.
2. The quantities given in the Bill of Quantities are estimated and provisional, and are given to provide a common basis for bidding. The basis of payment will be the actual quantities of work ordered and carried out, as measured by the Contractor and verified by the Engineer and valued at the rates and prices bid in the priced Bill of Quantities, where applicable, and otherwise at such rates and prices as the Engineer may fix within the terms of the Contract.
3. The rates and prices bid in the priced Bill of Quantities shall, except insofar as it is otherwise provided under the Contract, include all Constructional Plant, labour, supervision, materials, erection, maintenance, insurance, profit, taxes, and duties, together with all general risks, liabilities, and obligations set out or implied in the Contract.
4. A rate or price shall be entered against each item in the priced Bill of Quantities, whether quantities are stated or not. The cost of Items against which the Contractor has failed to enter a rate or price shall be deemed to be covered by other rates and prices entered in the Bill of Quantities.
5. The whole cost of complying with the provisions of the Contract shall be included in the Items provided in the priced Bill of Quantities, and where no Items are provided, the cost shall be deemed to be distributed among the rates and prices entered for the related Items of Work.
6. General directions and descriptions of work and materials are not necessarily repeated nor summarized in the Bill of Quantities. References to the relevant sections of the Contract documentation shall be made before entering prices against each item in the priced Bill of Quantities.
7. Provisional Sums included and so designated in the Bill of Quantities shall be expended in whole or in part at the direction and discretion of the Engineer in accordance with Sub-Clauses 13.4 and 13.5 of the General Conditions except with respect to DAAB Fees and Expenses for which no instruction will be required from the Engineer.
8. Provisional Sums included and so designated in the Bill of Quantities shall be expended in whole or in part at the direction and discretion of the Engineer in accordance with Sub-Clause 13.4 and Clause 13.5 of the General Conditions.
9. The method of measurement of completed work for payment shall be in accordance with *Special Provision and Standard Specification for Road and Bridge Works published by the Department of Roads, 2073 (With amendment 2075)BS.*
10. The bidder shall enter unit rate **exclusive** of VAT.

Note:

**Bill of Quantities is attached in the end of this bid document.**

Project Director

## B. Work Items

1. The Bill of Quantities usually contains the following part Bills, which have been grouped according to the nature or timing of the work:

Item No. 1—Provisional Sum
Item No. 2—General Items;
Item No. 3—Site Clearance
Item No. 4—Earthwork
Item No. 5—Pavement work
Item No. 6 – Structures
Item No. 7 – Road furnitures and Traffic Safety Measures
Item No. 8 – Environmental and Social Safeguard Works (Including Bio-engineering)
Item No. 9 – Schedule of Day Works
Item No. – Provisional sum
Item No. 10– Bridge
Item No. 11 – Bridge Repaip and Rehabilitation
Item No. 12 – Foot Over Bridge
Item No. 13– Geo-Synthetic and Reinforced Wall
Item No. 14 – Performance Based Mintenance

3. Bidders shall price the Bill of Quantities in **local currency** only and shall indicate in the **Appendix to Bid** the percentage expected for payment in foreign currency or currencies.

4. Abbriviation used in Bill of Quantities:

| | |
|---|---|
| Cum. | Cubic meter |
| Cum-Km | Cubic meter-Kilometer |
| hr | hour |
| Km | Kilometer |
| Km-month | Kilometer-Month |
| Lit | Liter |
| LS | Lump Sum |
| md | man days |
| m | meter |
| M.Ton | Metric Tonne |
| Mth | Month |
| No./Nos. | Number |
| PS | Provisional Sum |
| Rm | Running meter |
| Sqm. | Squar meter |

Project Director

# Daywork Schedule

## General

1. Reference should be made to Sub-Clause 13.6 of the General Conditions. Work shall not be executed on a daywork basis except by written order of the Engineer. Bidders shall enter basic rates for daywork items in the Schedules, which rates shall apply to any quantity of daywork ordered by the Engineer. Nominal quantities have been indicated against each item of daywork, and the extended total for Daywork shall be carried forward as a Provisional Sum to the Summary Total Bid Amount. Unless otherwise adjusted, payments for daywork shall be subject to price adjustment in accordance with the provisions in the Conditions of Contract.

## Daywork Labour

2. In calculating payments due to the Contractor for the execution of daywork, the hours for labour will be reckoned from the time of arrival of the labour at the job site to execute the particular item of daywork to the time of return to the original place of departure, but excluding meal breaks and rest periods. Only the time of classes of labour directly doing work ordered by the Engineer and for which they are competent to perform will be measured. The time of gangers (charge hands) actually doing work with the gangs will also be measured but not the time of foremen or other supervisory personnel.

3. The Contractor shall be entitled to payment in respect of the total time that labour is employed on daywork, calculated at the basic rates entered by the Contractor in the **Schedule of Daywork Rates: 1. Labour.** All the rates quoted by the bidder are inclusive of the Contractor's overhead and profit.

## Daywork Materials

4. The Contractor shall be entitled to payment in respect of materials used for daywork (except for materials for which the cost is included in the percentage addition to labour costs as detailed heretofore), at the basic rates entered by the Contractor in the **Schedule of Daywork Rates: 2. Materials.** All the rates quoted by the bidder are inclusive of the Contractor's overhead and profit.

## Daywork Contractor's Equipment

5. The Contractor shall be entitled to payments in respect of Contractor's Equipment already on Site and employed on daywork at the basic rental rates entered by the Contractor in the **Schedule of Daywork Rates: 3. Contractor's Equipment.** Said rates shall be deemed to include due and complete allowance for depreciation, interest, indemnity, and insurance, repairs, maintenance, supplies, fuel, lubricants, and other consumables, and all overhead, profit, and administrative costs related to the use of such equipment.

6. In calculating the payment due to the Contractor for Contractor's Equipment employed on daywork, only the actual number of working hours, excluding travelling time from the part of the Site where the Contractor's Equipment was located when ordered by the Engineer to be employed on daywork and the time for return journey thereto, will be eligible for payment.

Project Director

Project Director

# Technical Proposal

- **Site Organization**
- **Method Statement**
- **Mobilization Schedule**
- **Construction Schedule**
- **ES Management Strategies and Implementation Plans**
- **Code of Conduct for Contractor's Personnel (ES)**
- **Equipment**
- **Key Personnel Schedule**
- **Others**

Project Director

# Site Organization

*[insert Site Organization information]*

Project Director

# Method Statement

*[insert Method Statement]*

Project Director

# Mobilization Schedule

*[insert Mobilization Schedule]*

In accordance with the Particular Conditions, Sub-Clause 4.1, the Contractor shall not carry out mobilization to Site unless the Engineer gives consent that appropriate measures are in place to address environmental and social risks and impacts, which as a minimum shall include applying the Management Strategies and Implementation Plans (MSIPs) and Code of Conduct for Contractor's Personnel, submitted as part of the Bid and agreed as part of the Contract.

Project Director

# Construction Schedule

*[insert Construction Schedule]*

*The construction schedule shall include the following key milestones:*

- *No-objection to the Contractor's MSIPs, which collectively form the C-ESMP, in accordance with the Particular Conditions - Special provisions Sub-Clause 4.1.*
- *Constitution of the DAAB*

Project Director

# ES Management Strategies and Implementation Plans

## (ES-MSIP)

The Bidder shall submit comprehensive and concise Environmental and Social Management Strategies and Implementation Plans (ES-MSIP) as required by ITB 11.1 (h) of the Bid Data Sheet. These strategies and plans shall describe in detail the actions, materials, equipment, management processes etc. that will be implemented by the Contractor, and its subcontractors.

In developing these strategies and plans, the Bidder shall have regard to the ES provisions of the contract including those as may be more fully described in the Works Requirements in Section VII.

Project Director

# Code of Conduct for Contractor's Personnel (ES) Form

## CODE OF CONDUCT FOR CONTRACTOR'S PERSONNEL[3]

We are the Contractor, [*enter name of Contractor*]. We have signed a contract with [*enter name of Employer*] for [*enter description of the Works*]. These Works will be carried out at [*enter the Site and other locations where the Works will be carried out*]. Our contract requires us to implement measures to address environmental and social risks related to the Works, including the risks of sexual exploitation, sexual abuse and sexual harassment.

This Code of Conduct is part of our measures to deal with environmental and social risks related to the Works. It applies to all our staff, labourers and other employees at the Works Site or other places where the Works are being carried out. It also applies to the personnel of each subcontractor and any other personnel assisting us in the execution of the Works. All such persons are referred to as "**Contractor's Personnel"** and are subject to this Code of Conduct.

This Code of Conduct identifies the behavior that we require from all Contractor's Personnel.

Our workplace is an environment where unsafe, offensive, abusive or violent behavior will not be tolerated and where all persons should feel comfortable raising issues or concerns without fear of retaliation.

### REQUIRED CONDUCT

Contractor's Personnel shall:

1. carry out his/her duties competently and diligently;
2. comply with this Code of Conduct and all applicable laws, regulations and other requirements, including requirements to protect the health, safety and well-being of other Contractor's Personnel and any other person;
3. maintain a safe working environment including by:
    a. ensuring that workplaces, machinery, equipment and processes under each person's control are safe and without risk to health;
    b. wearing required personal protective equipment;
    c. using appropriate measures relating to chemical, physical and biological substances and agents; and
    d. following applicable emergency operating procedures.

[3] This form to be signed by contractor's personnel after contract is awarded.

Project Director

4. report work situations that he/she believes are not safe or healthy and remove himself/herself from a work situation which he/she reasonably believes presents an imminent and serious danger to his/her life or health;
5. treat other people with respect, and not discriminate against specific groups such as women, people with disabilities, migrant workers or children;
6. not engage in Sexual Harassment, which means unwelcome sexual advances, requests for sexual favors, and other verbal or physical conduct of a sexual nature with other Contractor's or Employer's Personnel;
7. not engage in Sexual Exploitation, which means any actual or attempted abuse of position of vulnerability, differential power or trust, for sexual purposes, including, but not limited to, profiting monetarily, socially or politically from the sexual exploitation of another;
8. not engage in Sexual Abuse, which means the actual or threatened physical intrusion of a sexual nature, whether by force or under unequal or coercive conditions;
9. not engage in any form of sexual activity with individuals under the age of 18, except in case of pre-existing marriage;
10. complete relevant training courses that will be provided related to the environmental and social aspects of the Contract, including on health and safety matters, Sexual Exploitation and Abuse (SEA), and Sexual Harassment (SH);
11. report violations of this Code of Conduct; and
12. not retaliate against any person who reports violations of this Code of Conduct, whether to us or the Employer, or who makes use of the grievance mechanism for Contractor's Personnel or the project's Grievance Redress Mechanism..

**RAISING CONCERNS**

If any person observes behavior that he/she believes may represent a violation of this Code of Conduct, or that otherwise concerns him/her, he/she should raise the issue promptly. This can be done in either of the following ways:

1. Contact [*enter name of the Contractor's Social Expert with relevant experience in handling gender-based violence, or if such person is not required under the Contract, another individual designated by the Contractor to handle these matters*] in writing at this address [ ] or by telephone at [ ] or in person at [ ]; or
2. Call [ ] to reach the Contractor's hotline *(if any)* and leave a message.

The person's identity will be kept confidential, unless reporting of allegations is mandated by the country law. Anonymous complaints or allegations may also be submitted and will be given all due and appropriate consideration. We take seriously all reports of possible misconduct and will investigate and take appropriate action. We will provide warm referrals to service providers that may help support the person who experienced the alleged incident, as appropriate.

There will be no retaliation against any person who raises a concern in good faith about any behavior prohibited by this Code of Conduct. Such retaliation would be a violation of this Code of Conduct.

## CONSEQUENCES OF VIOLATING THE CODE OF CONDUCT

Any violation of this Code of Conduct by Contractor's Personnel may result in serious consequences, up to and including termination and possible referral to legal authorities.

Project Director

FOR CONTRACTOR'S PERSONNEL:

I have received a copy of this Code of Conduct written in a language that I comprehend. I understand that if I have any questions about this Code of Conduct, I can contact [*enter name of Contractor's contact person(s) with relevant experience* ] requesting an explanation.

Name of Contractor's Personnel: [insert name]

Signature: _____

Date: (day month year): _____

Countersignature of authorized representative of the Contractor:

Signature: _____

Date: (day month year): _____

**ATTACHMENT 1:** Behaviors constituting Sexual Exploitation and Abuse (SEA) and behaviors constituting Sexual Harassment (SH)

Project Director

# ATTACHMENT 1 TO THE CODE OF CONDUCT FORM

## BEHAVIORS CONSTITUTING SEXUAL EXPLOITATION AND ABUSE (SEA) AND BEHAVIORS CONSTITUTING SEXUAL HARASSMENT (SH)

The following non-exhaustive list is intended to illustrate types of prohibited behaviors.

(1) **Examples of sexual exploitation and abuse** include, but are not limited to:

- A Contractor's Personnel tells a member of the community that he/she can get them jobs related to the work site (e.g. cooking and cleaning) in exchange for sex.
- A Contractor's Personnel that is connecting electricity input to households says that he can connect women headed households to the grid in exchange for sex.
- A Contractor's Personnel rapes, or otherwise sexually assaults a member of the community.
- A Contractor's Personnel denies a person access to the Site unless he/she performs a sexual favor.
- A Contractor's Personnel tells a person applying for employment under the Contract that he/she will only hire him/her if he/she has sex with him/her.

(2) **Examples of sexual harassment in a work context**

- Contractor's Personnel comment on the appearance of another Contractor's Personnel (either positive or negative) and sexual desirability.
- When a Contractor's Personnel complains about comments made by another Contractor's Personnel on his/her appearance, the other Contractor's Personnel comment that he/she is "asking for it" because of how he/she dresses.
- Unwelcome touching of a Contractor's or Employer's Personnel by another Contractor's Personnel.
- A Contractor's Personnel tells another Contractor's Personnel that he/she will get him/her a salary raise, or promotion if he/she sends him/her naked photographs of himself/herself.

Project Director

# Form EQU: Equipment

The Bidder shall provide adequate information to demonstrate clearly that it has the capability to meet the requirements for the key equipment listed in Section III, Evaluation and Qualification Criteria. A separate Form shall be prepared for each item of equipment listed, or for alternative equipment proposed by the Bidder.

| Item of equipment | | |
|---|---|---|
| Equipment information | Name of manufacturer | Model and power rating |
| | Capacity | Year of manufacture |
| Current status | Current location | |
| | Details of current commitments | |
| Source | Indicate source of the equipment<br>☐ Owned ☐ Rented ☐ Leased ☐ Specially manufactured | |

Omit the following information for equipment owned by the Bidder.

| | | |
|---|---|---|
| Owner | Name of owner | |
| | Address of owner | |
| | Telephone | Contact name and title |
| | Fax | Telex |
| Agreements | Details of rental / lease / manufacture agreements specific to the project | |
| | | |
| | | |

Project Director

## Form PER -1

# Contractor's Representative and Key Personnel Schedule

Bidders should provide the names and details of the suitably qualified Contractor's Representative and Key Personnel to perform the Contract. The data on their experience should be supplied using the Form PER-2 below for each candidate.

### Contractor' Representative and Key Personnel

| | | |
|---|---|---|
| **1.** | **Title of position:** Contractor's Representative | |
| | **Name of candidate:** | |
| | **Duration of appointment:** | [*insert the whole period (start and end dates) for which this position will be engaged*] |
| | **Time commitment: for this position:** | [*insert the number of days/week/months/ that has been scheduled for this position*] |
| | **Expected time schedule for this position:** | [*insert the expected time schedule for this position (e.g. attach high level Gantt chart*] |
| **2.** | **Title of position:** *[Environmental Specialist]* | |
| | **Name of candidate:** | |
| | **Duration of appointment:** | [*insert the whole period (start and end dates) for which this position will be engaged*] |
| | **Time commitment: for this position:** | [*insert the number of days/week/months/ that has been scheduled for this position*] |
| | **Expected time schedule for this position:** | [*insert the expected time schedule for this position (e.g. attach high level Gantt chart*] |
| **3.** | **Title of position:** *[Health and Safety Specialist]* | |
| | **Name of candidate:** | |
| | **Duration of appointment:** | [*insert the whole period (start and end dates) for which this position will be engaged*] |
| | **Time commitment: for this position:** | [*insert the number of days/week/months/ that has been scheduled for this position*] |
| | **Expected time schedule for this position:** | [*insert the expected time schedule for this position (e.g. attach high level Gantt chart*] |

Project Director

| | | |
|---|---|---|
| **4.** | **Title of position:** *[Social Specialist]* | |
| | **Name of candidate:** | |
| | **Duration of appointment:** | [*insert the whole period (start and end dates) for which this position will be engaged*] |
| | **Time commitment: for this position:** | [*insert the number of days/week/months/ that has been scheduled for this position*] |
| | **Expected time schedule for this position:** | [*insert the expected time schedule for this position (e.g. attach high level Gantt chart*] |
| **5.** | **Title of position: Sexual Exploitation, Abuse and Harassment Expert**<br>*[Where a Project SEA risks are assessed to be substantial or high, Key Personnel shall include an expert with relevant experience in addressing sexual exploitation, sexual abuse and sexual harassment cases]* | |
| | **Name of candidate** | |
| | **Duration of appointment:** | [*insert the whole period (start and end dates) for which this position will be engaged*] |
| | **Time commitment: for this position:** | [*insert the number of days/week/months/ that has been scheduled for this position*] |
| | **Expected time schedule for this position:** | [*insert the expected time schedule for this position (e.g. attach high level Gantt chart*] |
| **6.** | **Title of position:** *[insert title]* | |
| | **Name of candidate** | |
| | **Duration of appointment:** | [*insert the whole period (start and end dates) for which this position will be engaged*] |
| | **Time commitment: for this position:** | [*insert the number of days/week/months/ that has been scheduled for this position*] |
| | **Expected time schedule for this position:** | [*insert the expected time schedule for this position (e.g. attach high level Gantt chart*] |
| **7.** | **Title of position:** *[insert title]* | |
| | **Name of candidate** | |
| | **Duration of appointment:** | [*insert the whole period (start and end dates) for which this position will be engaged*] |
| | **Time commitment: for this position:** | [*insert the number of days/week/months/ that has been scheduled for this position*] |
| | **Expected time schedule for this position:** | [*insert the expected time schedule for this position (e.g. attach high level Gantt chart*] |
| **8.** | **Title of position: [insert title]** | |

Project Director

| | | |
|---|---|---|
| | **Name of candidate** | |
| | **Duration of appointment:** | [insert the whole period (start and end dates) for which this position will be engaged] |
| | **Time commitment: for this position:** | [insert the number of days/week/months/ that has been scheduled for this position] |
| | **Expected time schedule for this position:** | [insert the expected time schedule for this position (e.g. attach high level Gantt chart] |

Project Director

# Form PER-2:
# Resume and Declaration

## Contractor's Representative and Key Personnel

| | | |
|---|---|---|
| **Name of Bidder:** | | |
| **Position [#*1*]: [*title of position from Form PER-1*]** | | |
| **Personnel information** | **Name:** | **Date of birth:** |
| | **Address:** | **E-mail:** |
| | | |
| | **Professional qualifications:** | |
| | **Academic qualifications:** | |
| | **Language proficiency:***[language and levels of speaking, reading and writing skills]* | |
| **Details** | | |
| | **Address of employer:** | |
| | **Telephone:** | **Contact (manager / personnel officer):** |
| | **Fax:** | |
| | **Job title:** | **Years with present employer:** |

Summarize professional experience in reverse chronological order. Indicate particular technical and managerial experience relevant to the project.

| Project | Role | Duration of involvement | Relevant experience |
|---|---|---|---|
| *[main project details]* | *[role and responsibilities on the project]* | *[time in role]* | *[describe the experience relevant to this position]* |

Project Director

| | | | |
|---|---|---|---|
| | | | |
| | | | |

## Declaration

I, the undersigned *[ insert either "Contractor's Representative" or "Key Personnel" as applicable]* , certify that to the best of my knowledge and belief, the information contained in this Form PER-2 correctly describes myself, my qualifications and my experience.

I confirm that I am available as certified in the following table and throughout the expected time schedule for this position as provided in the Bid:

| **Commitment** | **Details** |
|---|---|
| **Commitment to duration of contract:** | *[insert period (start and end dates) for which this Contractor's Representative or Key Personnel is available to work on this contract]* |
| **Time commitment:** | *[insert period (start and end dates) for which this Contractor's Representative or Key Personnel is available to work on this contract]* |

I understand that any misrepresentation or omission in this Form may:

1. be taken into consideration during Bid evaluation;
2. result in my disqualification from participating in the Bid;
3. result in my dismissal from the contract.

**Name of** Contractor's Representative or **Key Personnel: [*insert name*]**

Signature: _____

Date: (day month year): _____

**Countersignature of authorized representative of the Bidder:**

Signature: _____

Date: (day month year): _____

Project Director

# Bidders Qualification following Prequalification

The Bidder shall update the information given during the corresponding prequalification exercise to demonstrate that he continues to meet the criteria used at the time of prequalification regarding:

(a) Eligibility

(b) Contract, non-performance, pending litigation and litigation history

(c) Environmental and Social past performance

(d) Bank's SEA and/or SH Disqualification

(e) Financial Situation

For this purpose, the Bidder shall use the relevant forms included in this Section.

Project Director

## Form ELI -1.1

# Bidder Information Form

Date: _____
RFB No. and title: _____
Page _____of _____pages

| |
|---|
| Bidder's name |
| In case of Joint Venture (JV), name of each member: |
| Bidder's actual or intended country of registration:<br>*[indicate country of Constitution]* |
| Bidder's actual or intended year of incorporation: |
| Bidder's legal address [in country of registration]: |
| Bidder's authorized representative information<br>Name: _____<br>Address: _____<br>Telephone/Fax numbers: _____<br>E-mail address: _____ |
| 1. Attached are copies of original documents of<br>☐ Articles of Incorporation (or equivalent documents of constitution or association), and/or documents of registration of the legal entity named above, in accordance with ITB 4.4.<br>☐ In case of JV, letter of intent to form JV or JV agreement, in accordance with ITB 4.1.<br>☐ In case of state-owned enterprise or institution, in accordance with ITB 4.6 documents establishing:<br>• Legal and financial autonomy<br>• Operation under commercial law<br>• Establishing that the Bidder is not under the supervision of the Employer<br>2. Included are the organizational chart, a list of Board of Directors, and the beneficial ownership. *[If required under BDS ITB 47.1, the successful Bidder shall provide additional information on beneficial ownership, using the Beneficial Ownership Disclosure Form.]* |

Project Director

## Form ELI -1.2

# Bidder's JV Information Form

**(to be completed for each member of Bidder's JV)**

Date: _____
RFB No. and title: _____
Page _____ of _____ pages

| |
|---|
| Bidder's JV name: |
| JV member's name: |
| JV member's country of registration: |
| JV member's year of constitution: |
| JV member's legal address in country of constitution: |
| JV member's authorized representative information<br>Name: _____<br>Address: _____<br>Telephone/Fax numbers: _____<br>E-mail address: _____ |
| 1. Attached are copies of original documents of<br>☐ Articles of Incorporation (or equivalent documents of constitution or association), and/or registration documents of the legal entity named above, in accordance with ITB 4.4.<br>☐ In case of a state-owned enterprise or institution, documents establishing legal and financial autonomy, operation in accordance with commercial law, and that they are not under the supervision of the Employer, in accordance with ITB 4.6.<br>2. Included are the organizational chart, a list of Board of Directors, and the beneficial ownership. *[If required under BDS ITB 47.1, the successful Bidder shall provide additional information on beneficial ownership for each JV member using the Beneficial Ownership Disclosure Form.]* |

Project Director

**Form CON – 2**

# Historical Contract Non-Performance, Pending Litigation and Litigation History

***[This form should be used only if the information submitted at the time of prequalification requires updating. The following table shall be filled in for the Bidder and for JVs, each member of the Joint Venture]***

Bidder's Name: _____
Date: _____
JV Member's Name_____
RFB No. and title: _____
Page _____of _____pages

| Non-Performed Contracts in accordance with Section III, Evaluation and Qualification Criteria of the Prequalification document | | | |
|---|---|---|---|
| ☐ Contract non-performance did not occur since 1st January *[insert year]*<br>☐ Contract(s) not performed since 1st January *[insert year]* | | | |
| **Year** | **Non-performed portion of contract** | **Contract Identification** | **Total Contract Amount (current value, currency, exchange rate and US$ equivalent)** |
| *[insert year]* | *[insert amount and percentage]* | Contract Identification: *[indicate complete contract name/ number, and any other identification]*<br>Name of Employer: *[insert full name]*<br>Address of Employer: *[insert street/city/country]*<br>Reason(s) for nonperformance: *[indicate main reason(s)]* | *[insert amount]* |
| Pending Litigation, in accordance with Section III, Evaluation and Qualification Criteria of the Prequalification document | | | |
| ☐ No pending litigation<br>☐ Pending litigation | | | |

Project Director

| Year of dispute | Amount in dispute (currency) | Contract Identification | Total Contract Amount (currency), USD Equivalent (exchange rate) |
|---|---|---|---|
| | | Contract Identification: _____<br>Name of Employer: _____<br>Address of Employer: _____<br>Matter in dispute: _____<br>Party who initiated the dispute: ____<br>Status of dispute: _____ | |
| Litigation History in accordance with Section III, Evaluation and Qualification Criteria of the Prequalification document | | | |
| ☐ No Litigation History<br>☐ Litigation History | | | |
| **Year of award** | **Outcome as percentage of Net Worth** | **Contract Identification** | **Total Contract Amount (currency), USD Equivalent (exchange rate)** |
| *[insert year]* | *[insert percentage]* | Contract Identification: *[indicate complete contract name, number, and any other identification]*<br>Name of Employer: *[insert full name]*<br>Address of Employer: *[insert street/city/country]*<br>Matter in dispute: *[indicate main issues in dispute]*<br>Party who initiated the dispute: *[indicate "Employer" or "Contractor"]*<br>Reason(s) for Litigation and award decision *[indicate main reason(s)]* | *[insert amount]* |

Project Director

# Form CON – 3

## Environmental and Social Performance Declaration

*[This form should be used only if the information submitted at the time of prequalification requires updating. The following table shall be filled in for the Bidder, each member of a Joint Venture and each Specialized Subcontractor]*

Bidder's Name: *[insert full name]*
Date: *[insert day, month, year]*
Joint Venture Member's or Specialized Subcontractor's Name: *[insert full name]*
RFB No. and title: *[insert RFB number and title]*
Page *[insert page number]* of *[insert total number]* pages

| Environmental and Social Performance Declaration<br>in accordance with Section III, Qualification Criteria, and Requirements of the Prequalification document | | | |
|---|---|---|---|
| ☐ **No suspension or termination of contract**: An employer has not suspended or terminated a contract and/or called the performance security for a contract for reasons related to Environmental and Social (ES) performance since the date specified in Section III, Qualification Criteria, and Requirements, Sub-Factor 2.5.<br>☐ **Declaration of suspension or termination of contract**: The following contract(s) has/have been suspended or terminated and/or Performance Security called by an employer(s) for reasons related to Environmental and Social (ES) performance since the date specified in Section III, Qualification Criteria, and Requirements, Sub-Factor 2.5. Details are described below: | | | |
| **Year** | **Suspended or terminated portion of contract** | **Contract Identification** | **Total Contract Amount (current value, currency, exchange rate and US$ equivalent)** |
| *[insert year]* | *[insert amount and percentage]* | Contract Identification: *[indicate complete contract name/ number, and any other identification]*<br>Name of Employer: *[insert full name]*<br>Address of Employer: *[insert street/city/country]*<br>Reason(s) for suspension or termination: *[indicate main reason(s) e.g. gender-based violence; sexual exploitation or sexual abuse breaches]* | *[insert amount]* |
| *[insert year]* | *[insert amount and percentage]* | Contract Identification: *[indicate complete contract name/ number, and any other identification]*<br>Name of Employer: *[insert full name]*<br>Address of Employer: *[insert street/city/country]* | *[insert amount]* |

Project Director

| | | | |
|---|---|---|---|
| | | Reason(s) for suspension or termination: *[indicate main reason(s)]* | |
| … | … | *[list all applicable contracts]* | … |
| **Performance Security called by an employer(s) for reasons related to ES performance** | | | |
| Year | Contract Identification | | Total Contract Amount (current value, currency, exchange rate and US$ equivalent) |
| *[insert year]* | Contract Identification: *[indicate complete contract name/ number, and any other identification]*<br>Name of Employer: *[insert full name]*<br>Address of Employer: *[insert street/city/country]*<br>Reason(s) for calling of performance security: *[indicate main reason(s) e.g. gender-based violence; sexual exploitation or sexual abuse breaches]* | | *[insert amount]* |
| | | | |

Project Director

# Form CON – 4

## Sexual Exploitation and Abuse (SEA) and/or Sexual Harassment Performance Declaration

*[The following table shall be filled in by the Bidder, each member of a Joint Venture and each subcontractor proposed by the Bidder]*

Bidder's Name: *[insert full name]*
Date: *[insert day, month, year]*
Joint Venture Member's or Subcontractor's Name: *[insert full name]*
RFB No. and title: *[insert RFB number and title]*
Page *[insert page number]* of *[insert total number]* pages

| **SEA and/or SH Declaration**<br>**in accordance with Section III, Qualification Criteria, and Requirements** |
|---|
| We:<br>☐ (a) have not been subject to disqualification by the Bank for non-compliance with SEA/ SH obligations<br>☐ (b) are subject to disqualification by the Bank for non-compliance with SEA/ SH obligations<br>☐ (c) had been subject to disqualification by the Bank for non-compliance with SEA/ SH obligations. An arbitral award on the disqualification case has been made in our favor.<br>☐ (d) had been subject to disqualification by the Bank for non-compliance with SEA/ SH obligations for a period of two years. We have subsequently demonstrated that we have adequate capacity and commitment to comply with SEA/ SH obligations.<br>☐ (e) had been subject to disqualification by the Bank for non-compliance with SEA/ SH obligations for a period of two years. We have attached evidence demonstrating that we have adequate capacity and commitment to comply with SEA/ SH obligations. |
| **[*If (c) above is applicable, attach evidence of an arbitral award reversing the findings on the issues underlying the disqualification.]*** |
| ***[If (d) or ( e) above are applicable, provide the following information:]*** |
| Period of disqualification: From: _____ To: _____ |
| If previously provided on another Bank financed works contract, details of evidence that demonstrated adequate capacity and commitment to comply with SEA/ SH obligations (**as per (d) above)**<br>Name of Employer: _____<br>Name of Project: _____<br>Contract description: _____<br>Brief summary of evidence provided: _____<br>_____<br>Contact Information: (Tel, email, name of contact person): _____ |

Project Director

| |
|---|
| _____ |
| As an alternative to the evidence under (d), other evidence demonstrating adequate capacity and commitment to comply with SEA/ SH obligations (**as per (e) above)** *[attach details as appropriate]*. |

Project Director

## Form FIN – 3.1

# Financial Situation and Performance

Bidder's Name: _____
Date: _____
JV Member Name_____
RFB No. and title: _____
Page _____of _____pages

**1. Financial data**

*(This form should be used only if the information submitted at the time of prequalification requires updating)*

| **Type of Financial information in (currency)** | **Historic information for previous _____*years*, _____ (amount in currency, currency, exchange rate, USD equivalent)** | | | | |
|---|---|---|---|---|---|
| | Year 1 | Year 2 | Year 3 | Year4 | Year 5 |
| Statement of Financial Position (Information from Balance Sheet) | | | | | |
| Total Assets (TA) | | | | | |
| Total Liabilities (TL) | | | | | |
| Total Equity/Net Worth (NW) | | | | | |
| Current Assets (CA) | | | | | |
| Current Liabilities (CL) | | | | | |
| Working Capital (WC) | | | | | |
| Information from Income Statement | | | | | |
| Total Revenue (TR) | | | | | |
| Profits Before Taxes (PBT) | | | | | |
| Cash Flow Information | | | | | |

Project Director

| | | | | | |
|---|---|---|---|---|---|
| Cash Flow from Operating Activities | | | | | |

**2. Sources of Finance**

Specify sources of finance to meet the cash flow requirements on works currently in progress and for future contract commitments.

| No. | Source of finance | Amount (US$ equivalent) |
|---|---|---|
| 1 | | |
| 2 | | |
| 3 | | |
| | | |

**2. Financial documents**

The Bidder and its parties shall provide copies of financial statements to demonstrate that they continue to meet the financial requirements at the time of prequalification.

The financial statements shall:

(a) reflect the financial situation of the Bidder or in case of JV member, and not an affiliated entity (such as parent company or group member).
(b) be independently audited or certified in accordance with local legislation.
(c) be complete, including all notes to the financial statements.
(d) correspond to accounting periods already completed and audited.

☐ Attached are copies of financial statements[4] for the _____years required above; and complying with the requirements

[4] If the most recent set of financial statements is for a period earlier than 12 months from the date of bid, the reason for this should be justified.

Project Director

**Form FIN - 3.2**

# Average Annual Construction Turnover

*(This form should be used only if the information submitted at the time of prequalification requires updating)*

Bidder's Name: _____
Date: _____
JV Member Name_____
RFB No. and title: _____
Page _____of _____pages

| | **Annual turnover data (construction only)** | | |
|---|---|---|---|
| **Year** | **Amount**<br>**Currency** | **Exchange rate** | **USD equivalent** |
| *[indicate year]* | *[insert amount and indicate currency]* | | |
| | | | |
| | | | |
| | | | |
| | | | |
| | | | |
| Average Annual Construction Turnover | | | |

Project Director

# Form FIN – 3.4:

## Current Contract Commitments / Works in Progress

Bidders and each member to a JV should provide information on their current commitments on all contracts that have been awarded, or for which a letter of intent or acceptance has been received, or for contracts approaching completion, but for which an unqualified, full completion certificate has yet to be issued.

| Current Contract Commitments | | | | | |
|---|---|---|---|---|---|
| **No.** | **Name of Contract** | **Employer's Contact Address, Tel, Fax** | **Value of Outstanding Work [Current US$ Equivalent]** | **Estimated Completion Date** | **Average Monthly Invoicing Over Last Six Months [US$/month)]** |
| 1 | | | | | |
| 2 | | | | | |
| 3 | | | | | |
| 4 | | | | | |
| 5 | | | | | |
| | | | | | |

Project Director

# Form of Bid Security – Demand Guarantee

_____

**Beneficiary:** _____

**Request for Bids No:** _____

**Date:** _____

**BID GUARANTEE No.:** _____

**Guarantor:** _____

We have been informed that _____ (hereinafter called "the Applicant") has submitted or will submit to the Beneficiary its Bid (hereinafter called "the Bid") for the execution of _____ under Request for Bids No. _____ ("the RFB").

Furthermore, we understand that, according to the Beneficiary's conditions, Bids must be supported by a Bid guarantee.

At the request of the Applicant, we, as Guarantor, hereby irrevocably undertake to pay the Beneficiary any sum or sums not exceeding in total an amount of _____ (_____) upon receipt by us of the Beneficiary's complying demand, supported by the Beneficiary's statement, whether in the demand itself or a separate signed document accompanying or identifying the demand, stating that either the Applicant:

(a) has withdrawn its Bid prior to the Bid validity expiry date set forth in the Applicant's Letter of Bid, or any extended date provided by the Applicant; or

(b) having been notified of the acceptance of its Bid by the Beneficiary prior to the expiry date of the Bid validity or any extension thereto provided by the Applicant, (i) has failed to execute the contract agreement, or (ii) has failed to furnish the Performance Security and, if required, the Environmental and Social (ES) Performance Security, in accordance with the Instructions to Bidders ("ITB") of the Beneficiary's Bidding document.

This guarantee will expire: (a) if the Applicant is the successful Bidder, upon our receipt of copies of the contract agreement signed by the Applicant and the Performance Security and, if required, the Environmental and Social (ES) Performance Security, issued to the Beneficiary in relation to such contract agreement; or (b) if the Applicant is not the successful Bidder, upon the earlier of (i) our receipt of a copy of the Beneficiary's notification to the Applicant of the results of the Bidding process; or (ii) twenty-eight days after the expiry date of the Bid validity.

Consequently, any demand for payment under this guarantee must be received by us at the office indicated above on or before that date.

This guarantee is subject to the Uniform Rules for Demand Guarantees (URDG) 2010 Revision, ICC Publication No. 758.

_____

*[signature(s)]*

Project Director

# Section V - Eligible Countries

## Eligibility for the Provision of Goods, Works and Non Consulting Services in Bank-Financed Procurement

In reference to ITB 4.8 and 5.1, for the information of the Bidders, at the present time firms, goods and services from the following countries are excluded from this Bidding process:

Under ITB 4.8 (a) and 5.1: *None*

Under ITB 4.8 (b) and 5.1: *None*

Project Director

# Section VI - Fraud and Corruption

**(Section VI shall not be modified)**

## 1. Purpose

1.1 The Bank's Anti-Corruption Guidelines and this annex apply with respect to procurement under Bank Investment Project Financing operations.

## 2. Requirements

2.1 The Bank requires that Borrowers (including beneficiaries of Bank financing); bidders (applicants/proposers), consultants, contractors and suppliers; any sub-contractors, sub-consultants, service providers or suppliers; any agents (whether declared or not); and any of their personnel, observe the highest standard of ethics during the procurement process, selection and contract execution of Bank-financed contracts, and refrain from Fraud and Corruption.

2.2 To this end, the Bank:

a. Defines, for the purposes of this provision, the terms set forth below as follows:

i. "corrupt practice" is the offering, giving, receiving, or soliciting, directly or indirectly, of anything of value to influence improperly the actions of another party;

ii. "fraudulent practice" is any act or omission, including misrepresentation, that knowingly or recklessly misleads, or attempts to mislead, a party to obtain financial or other benefit or to avoid an obligation;

iii. "collusive practice" is an arrangement between two or more parties designed to achieve an improper purpose, including to influence improperly the actions of another party;

iv. "coercive practice" is impairing or harming, or threatening to impair or harm, directly or indirectly, any party or the property of the party to influence improperly the actions of a party;

v. "obstructive practice" is:

(a) deliberately destroying, falsifying, altering, or concealing of evidence material to the investigation or making false statements to investigators in order to materially impede a Bank investigation into allegations of a corrupt, fraudulent, coercive, or collusive practice; and/or threatening, harassing, or intimidating any party to prevent it from disclosing its knowledge of matters relevant to the investigation or from pursuing the investigation; or

(b) acts intended to materially impede the exercise of the Bank's inspection and audit rights provided for under paragraph 2.2 e. below.

Project Director

b. Rejects a proposal for award if the Bank determines that the firm or individual recommended for award, any of its personnel, or its agents, or its sub-consultants, sub-contractors, service providers, suppliers and/ or their employees, has, directly or indirectly, engaged in corrupt, fraudulent, collusive, coercive, or obstructive practices in competing for the contract in question;

c. In addition to the legal remedies set out in the relevant Legal Agreement, may take other appropriate actions, including declaring misprocurement, if the Bank determines at any time that representatives of the Borrower or of a recipient of any part of the proceeds of the loan engaged in corrupt, fraudulent, collusive, coercive, or obstructive practices during the procurement process, selection and/or execution of the contract in question, without the Borrower having taken timely and appropriate action satisfactory to the Bank to address such practices when they occur, including by failing to inform the Bank in a timely manner at the time they knew of the practices;

d. Pursuant to the Banks Anti-Corruption Guidelines and in accordance with the Bank's prevailing sanctions policies and procedures, may sanction a firm or individual, either indefinitely or for a stated period of time, including by publicly declaring such firm or individual ineligible (i) to be awarded or otherwise benefit from a Bank-financed contract, financially or in any other manner;[1] (ii) to be a nominated[2] sub-contractor, consultant, manufacturer or supplier, or service provider of an otherwise eligible firm being awarded a Bank-financed contract; and (iii) to receive the proceeds of any loan made by the Bank or otherwise to participate further in the preparation or implementation of any Bank-financed project;

e. Requires that a clause be included in bidding/request for proposals documents and in contracts financed by a Bank loan, requiring (i) bidders (applicants/proposers), consultants, contractors, and suppliers; and their sub-contractors, sub-consultants, service providers, suppliers, agents, personnel, permit the Bank to inspect[3] all accounts, records and other documents relating to the procurement process, selection and/or contract execution, and to have them audited by auditors appointed by the Bank.

---

1 For the avoidance of doubt, a sanctioned party's ineligibility to be awarded a contract shall include, without limitation, (i) applying for pre-qualification, expressing interest in a consultancy, and bidding, either directly or as a nominated sub-contractor, nominated consultant, nominated manufacturer or supplier, or nominated service provider, in respect of such contract, and (ii) entering into an addendum or amendment introducing a material modification to any existing contract.

2 A nominated sub-contractor, nominated consultant, nominated manufacturer or supplier, or nominated service provider (different names are used depending on the particular bidding document) is one which has been: (i) included by the bidder in its pre-qualification application or bid because it brings specific and critical experience and know-how that allow the bidder to meet the qualification requirements for the particular bid; or (ii) appointed by the Borrower.

3 Inspections in this context usually are investigative (i.e., forensic) in nature. They involve fact-finding activities undertaken by the Bank or persons appointed by the Bank to address specific matters related to investigations/audits, such as evaluating the veracity of an allegation of possible Fraud and Corruption, through the appropriate mechanisms. Such activity includes but is not limited to: accessing and examining a firm's or individual's financial records and information, and making copies thereof as relevant; accessing and examining any other documents, data and information (whether in hard copy or electronic format) deemed relevant for the investigation/audit, and making copies thereof as relevant; interviewing staff and other relevant individuals; performing physical inspections and site visits; and obtaining third party verification of information.

Project Director

# PART 2 –Works' Requirements

Project Director

# Section VII - Works' Requirements

## Contents

**Scope of Works.....98**
**Specification.....100**
**Environmental and Social (ES) requirements.....101**
**Contractor's Representative and Key Personnel.....104**
**Drawings.....105**
**Supplementary Information .....106**

Project Director

# Scope of Works

## 1. Description of the Works

### Location of site:

The site is a section of Tribhuvan Highway from Nagdunga to Naubise. The length of the road section is 12.26 Km. The starting point is about 12 Km west from center of capital city Kathmandu.The site terrain is hilly. The Average annual daily traffic is about 15,000 vehicle. The road section lies in Kathmandu and Dhadhing district of Bagmati Province.

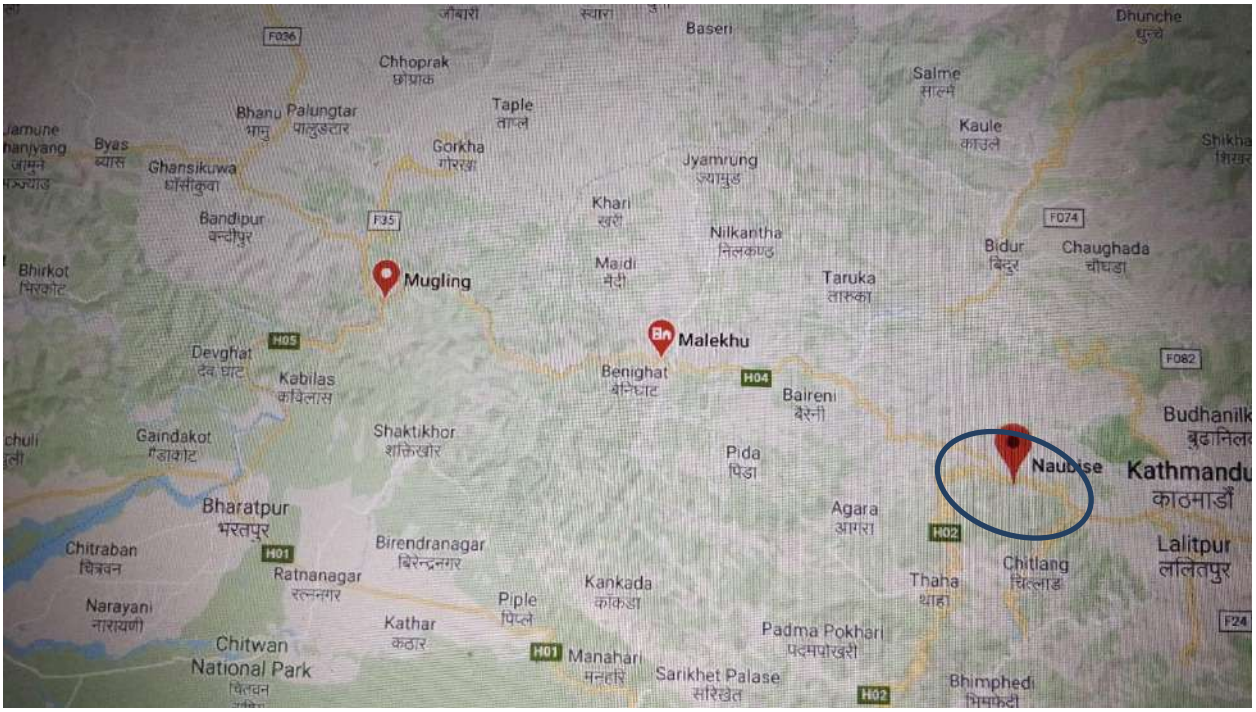


Location map of project site

Kathmandu – Nagdunga-Naubise - Mugling Road is the only major highway which accommodates all types of commercial vehicles and connects the capital city of Kathmandu with other parts of the country. So this road cannot be fully closed for traffic for long duration. Contractor shall prepare the work programme keeping in view of this situation and adequate provision of traffic management has to be considered in the proposal. However, the contractor may be allowed to stop traffic temporarily for short period, when construction work has to be continued in extremely difficult situations. Time and period of such closure shall be as agreed with the local government authorities and the Employer. Contractor will be fully responsible to manage the construction work during such difficult situation.

Project Director

The Works under the Contract will comprise of two (2) phases:

**Phase 1: Improvement/Construction Works**

This phase of contract consists of improvement of existing two-lane black topped road with asphalt concrete pavement, with additional climbing/ passing lanes at selected locations and extension to 4-6 lanes at built-up/ market areas, retaining and drainage structures in Tribhuvan Highway from Chainage Km 0+000 to Km 12+260**.** The works to be executed shall mainly comprise of the following item:

a. Earthworks
b. Side drain
c. Retaining Structures (Gabion / Masonry / Concrete / RCC)
d. Bridges /Culverts
e. RCC road widening structures
f. Subbase course
g. Wet Mix Macadam Base Course
h. Bituminous Macadam /Ashphalt Concrete
i. Environment Management Measures, including bio-engineering works.

The period for Phase 1 shall be 2 (two) years construction period Plus one year Defect Notification Period (DNP).

**Phase 2: Performance Based Maintenance Works**

Maintenance Works consisting of all activities to be carried out by the Contractor to achieve and keep the road asset as defined in the Performance Based Maintenance Specifications, and all activities related to their management.

The Phase 2, Performance based maintenance works starts after completion of construction works under phase 1.

The duration of phase 2 (Performance Based Maintenance Work) shall be 5 years after completion of Phase 1(including 1 year DNP of Phase 1).

## 2. Construction Period

The total contract duration will be 7 years including 2 years of construction/ improvement under Phase 1 and 5 years of Performance Based Maintenance period under Phase 2 (including DNP of Phase 1).

Project Director

# Specification

Refer Part II: Section VII: Works Requirement

## (a.1) Standard Specifications

## (a.2) Special Specifications

Project Director

# Environmental and Social (ES) requirements

| Sub-Clause/Clause No. | Sub-Clause/Clause | Remarks |
|---|---|---|
| 4.6 | Co-operation | Contractor shall cooperate in monitoring and conducting environmental and social assessment |
| 4.8 | Health and Safety Obligations | The OHS specialist should be hired by the contractors before commencement of the civil works. The contractor will appoint the primary health officer who is responsible to provide the primary health treatment to the labor groups and their staffts. The details has been meintioned in the LMP document that has already been disclosed in DoR's website, which shallbe followed. |
| 4.18 | Protection of the Environment | For production, transportation, handling, and storage of hazardous chemicals contractors should follow the procedures as prescribed in ESMP of disclosed ESIA. |
| 4.21 | Security of the Site | Prepare, adopt and implement traffic managemant plan within and around the construction sites. |
| 4.23 (c) | Archeological and Geological Findings | All fossils, coins, articles of value or antiquity, structures, groups of structures, and other remains or items of geological, archaeological, paleontological, historical, architectural or religious interest found on the Site shall be placed under the care and custody of the Employer. The Contractor shall:<br>(a) take all reasonable precautions, including fencing-off the area or site of the finding, to avoid further disturbance and prevent Contractor's Personnel or other persons from removing or damaging any of these findings; |

Project Director

| | | |
|---|---|---|
| | | (b) train relevant Contractor's Personnel on appropriate actions to be taken in the event of such findings; and<br>implement any other action consistent with the requirements of the Specification and relevant Laws. |
| 6.2 | Rate of Wages and Conditions of Labour | The minimum wage rate fixed by Government of Nepal shall be provided to the Labours. There shall not be discrimination in wage rate for male and female in similar works. The national labour and emploement law shall be followed. |
| 6.27 | Traning of Contractor's Personnel | The E&S orientation, orientation on traffic and road safety,emergency preparedness (refer para 19 of ESS-4 of ESF), OHS(tool box talk), GBV(SEA/SH) orientation |

**Management and Safety of Hazardous Materials**

The Contractor shall implement measures and action to control safety of deliveries of hazardous material and storage, transportation and disposal of hazardous material and will implement measures to avoid or control community exposure to such hazardous material.

**Resource Efficiency and Pollution Prevention and Management**

- **Resource efficiency**

The Contractor shall specify the measures for improving efficient consumption of energy, water and raw materials, as well as other resource utilized during the commencement of civil works.

- **Energy:** The contractor shall adopt the environment, health and safety guidelines (EHSG) of WB to optimize energy uses, to the extent technically and financially feasible and shall apply any applicable measures to optimize energy usage.

- **Water:** The contractor shall adopt measures, to the extent technically and financially feasible, that avoid or minimize the water uses so that it doesn't have significant impact on the communities and the environment. In case of use of water sources, the contractors should apply the appropriate mitigation measures.

- **Raw material:** The contractors shall adopt measures, to the extent technically and financially feasible, that minimize the use of raw materials from the vicinity of project area and should follow the recommendation for material extraction as prescribed in the disclosed ESIA with appropriate mitigation measures.

Project Director

- **Pollution prevention and management**
  - **Management of air pollution:** The contractors shall apply the alternatives and implement technically and financially feasible and cost-effective options to avoid or minimize the project related air emission during operation.
  - **Management of hazardous and nonhazardous wastes:** The contractors shall avoid the generation of hazardous and non-hazardous wastes. The contractors shall apply measures to minimize the generation of waste, and apply the techniques like reuse, recycle and recover waste in a manner that is safe for human health and the environment including storage, transportation and safe disposal of hazardous wastes.
  - **Management of chemicals and hazardous materials:** The contractors shall avoid or will minimize and use of chemicals and hazardous materials subject to national and international guidelines. The contractors shall consider the less hazardous substitutes where hazardous materials are intended to be used in manufacturing process and other operations.
- **Biodiversity Conservation and Sustainable Management of Living Natural Resources**

The contractors shall manage the living natural resources in a sustainable manner, through the application of good management practices, and available technologies that helps to minimize the potential impacts on local, nearby or ecologically linked habitats, bio-diversity and communities, including indigenous people. The contractors shall also manage the risk of invasive alien species during the execution of the works.

- **Road Safety**

The Contractor shall take all necessary safety measures to avoid the occurrence of incidents and injuries to any third party, associated with the use of, if any, Contractor's Equipment on public roads or other public infrastructure.

The Contractor shall monitor road safety incidents and accidents to identify negative safety issues, and establish and implement necessary measures to resolve them.

During construction work special traffic management required for smooth flow of public traffic.

Project Director

# Contractor's Representative and Key Personnel

*[Note: Insert in the following table, the minimum key specialists required to execute the contract, taking into account the nature, scope, complexity and risks of the contract.]*

*Where a Project SEA risks are assessed to be substantial or high, the Employer shall include a Sexual Exploitation, Abuse and Harassment expert(s).]*

**Contractor's Representative and Key Personnel**

| Item No. | Position/specialization | Relevant academic qualifications | Minimum years of relevant work experience |
|---|---|---|---|
| 1 | Contractor's Representative | Bachelor's Degree in relevant discipline. | 5 years working experience on construction contracts |
| 2 | Highway Engineer/Civil Engineer | Bachelor's Degree in Highway/Civil Engineering | 5 years working experience on Road contracts of similar nature |
| 3 | Structural/Bridge Engineer | Bachelor's Degree in Civil Engineering | 5 years working experience in bridge/structure works |
| 4 | Environmental | Bachelor's degree in relevant environmental subject | 3 years working experience on environmental safeguard works |
| 5 | Health and Safety | Bachelor's degree in relevant subject | 2 years working experience on health and safety works |
| 6 | Social | Bachelor's degree in relevant subject | 2 years working experience on social safeguard works |
| 7 | Sexual Exploitation, Abuse and Harassment | Bachelor's degree in relevant subject | 2 years of working experience on monitoring and managing risks related to gender-based violence or addressing issues related to *sexual abuse and sexual harassment.* |

Project Director

# Drawings

Project Director

New

GOVERNMENT OF NEPAL

MINISTRY OF PHYSICAL INFRASTRUCTURE AND TRANSPORT

# DEPARTMENT OF ROADS

## DEVELOPMENT COOPERATION IMPLEMENTATION DIVISION

**NEPAL INDIA REGIONAL TRADE AND TRANSPORT PROJECT (NIRTTP)**

**(IDA CREDIT NO. 5273 - NEP)**

# Detailed Design of Improvement of Kathmandu (Nagdhunga)-Naubise-Mugling Road and Bridges

# Final Design Report

## Modified Volume-V(D) : TYPICAL DRAWINGS

**AUGUST 2020**


**DESIGN CONSULTANT:**

Intercontinental Consultants and Technocrats Pvt. Ltd.
A-8, Green Park, New Delhi - 110016, INDIA

*in Joint Venture with*

Soosung Engineering Co. Ltd., South Korea

*in association with*

Full Bright Consultancy (Pvt.) Ltd., Kathmandu, Nepal

# TYPICAL DRAWINGS

# TYPICAL ROAD CROSS SECTION

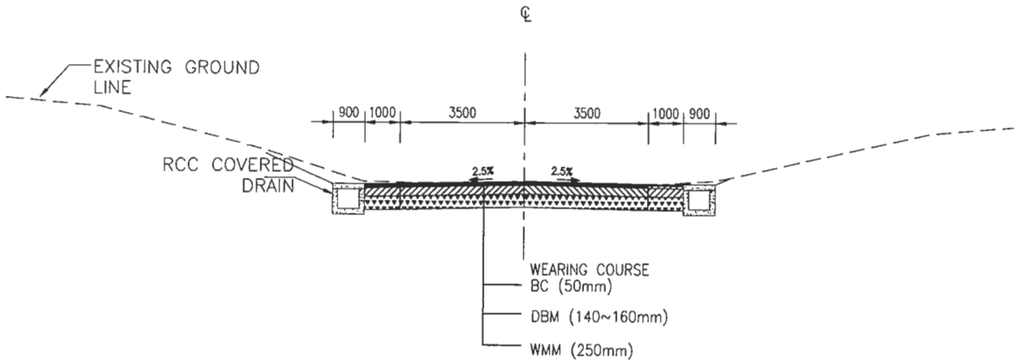


TCS TYPE - 1 : IMPROVEMENT OF EXISTING ROAD TO 2 LANE CARRIAGEWAY

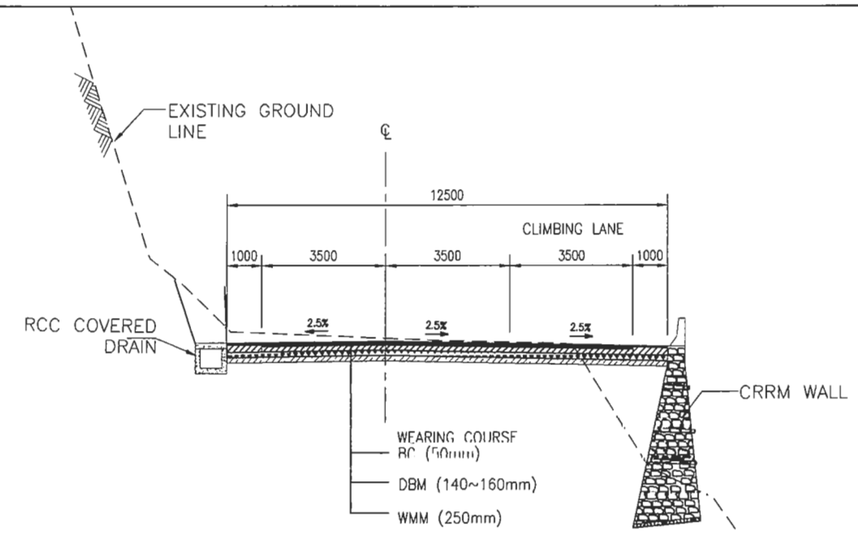


TCS TYPE - 2 : IMPROVEMENT OF EXISTING ROAD TO 2 LANE CARRIAGEWAY WITH CLIMBING LANE (LEFT)

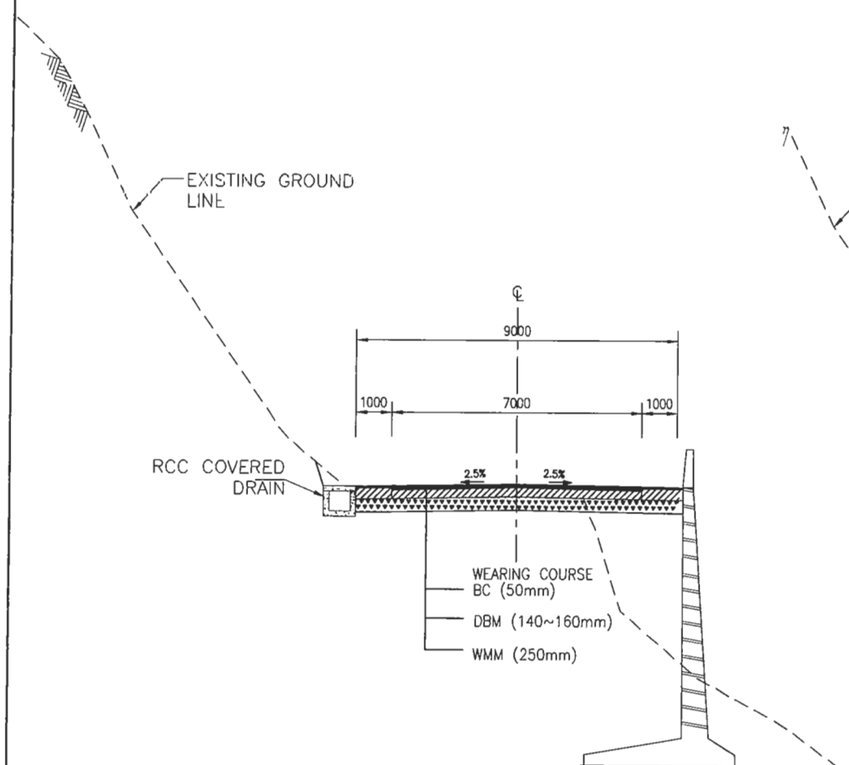


TCS TYPE - 3 : IMPROVEMENT OF EXISTING ROAD TO 2 LANE CARRIAGEWAY

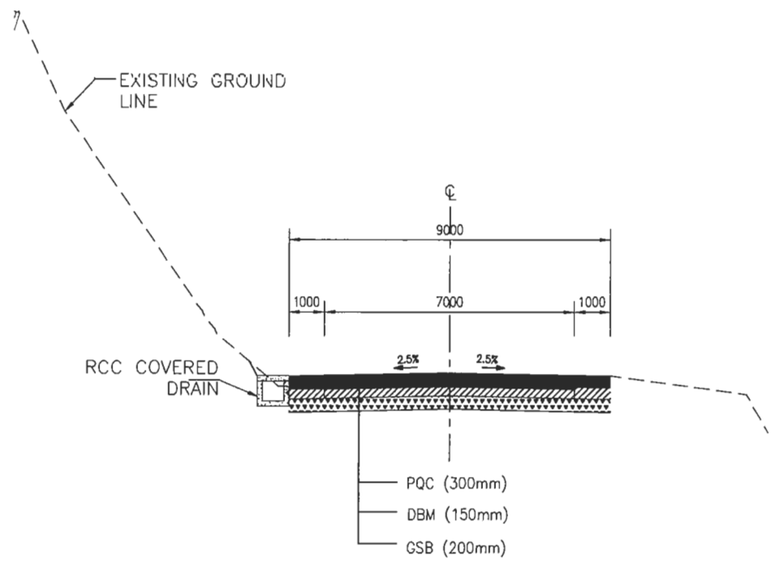


TCS TYPE - 3a : RIGID PAVEMENT DETAILS

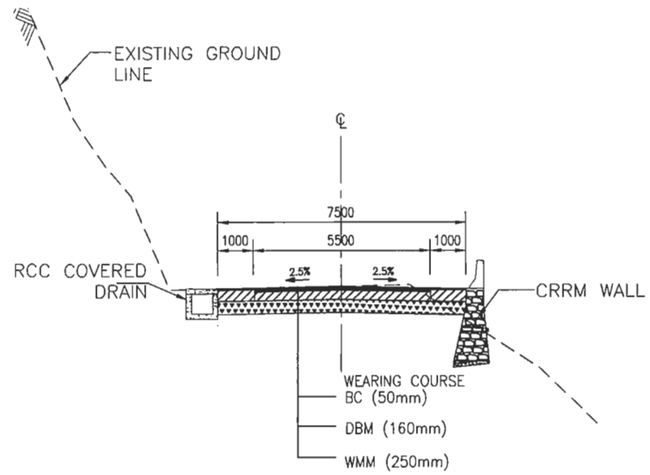


TCS TYPE - 4 : TYPICAL CROSS SECTION AT NAGDH□NGA SISNE SECTION

NOTE :

SIDE DRAIN TYPE SHALL BE AS PER SITE RE□□IREMENTS.

| EMPLOYER | PROJECT | DESIGN CONSULTANT | | | | | | |
|---|---|---|---|---|---|---|---|---|
| Government of Nepal<br>Ministry of Physical Infrastructure and Transport<br>**Department of Roads**<br>**Development Cooperation Implementation Division** | Nepal India Regional Trade and Transport Project (NIRTTP)<br>(IDA CREDIT No. 5273 - NEP)<br>Detailed Design for Improvement of Kathmandu (Nagdhunga) - Naubise - Mugling Road and Bridges | Intercontinental Consultants & Technocrats Pvt. Ltd.<br>A-8, Green Park, New Delhi - 110016<br>Ph : 4086-3000, Fax 2685-5252<br>In Joint Venture With<br>Soosung Engineering Co. Ltd., South Korea | In Association With<br>Full Bright Consultancy (Pvt.) Ltd.<br>316,Baburam Acharya Sadak<br>Sinamangal, Kathmandu, GPO Box: 4970, Kathmandu, Nepal | Designed By | SB | | **DRAWING NAME:**<br>TYPICAL CROSS SECTION | **Scale:**<br>NOT TO SCALE | **Date:**<br>August 2019 |
| | | | | Checked By | PMS | | | | **Drawing No.:**<br>NNMR-TYP 01-01 |
| | | | | Approved By | BNS | | | | |

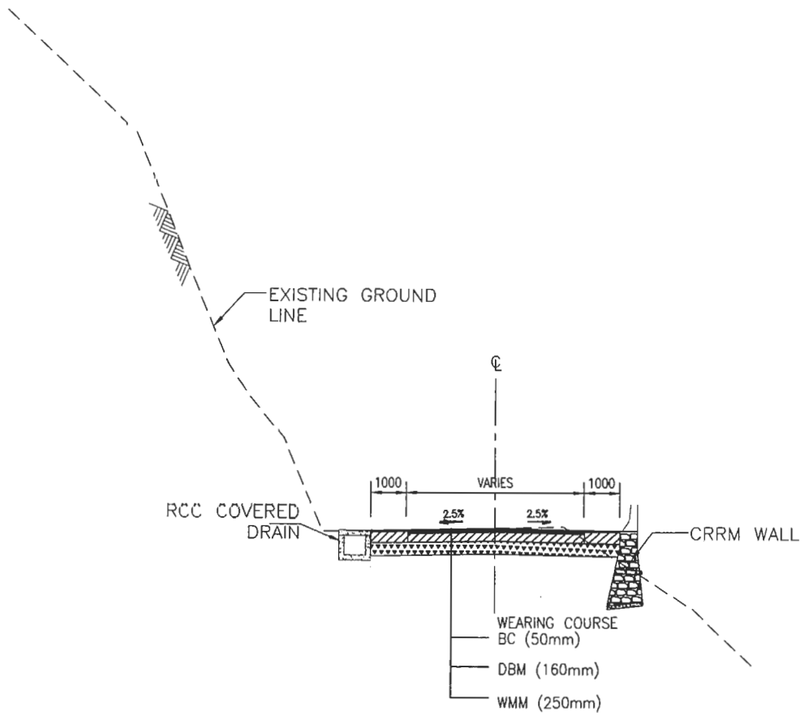


TCS TYPE - 5 : TYPICAL CROSS SECTION AT KRISHNA BHIR SECTION

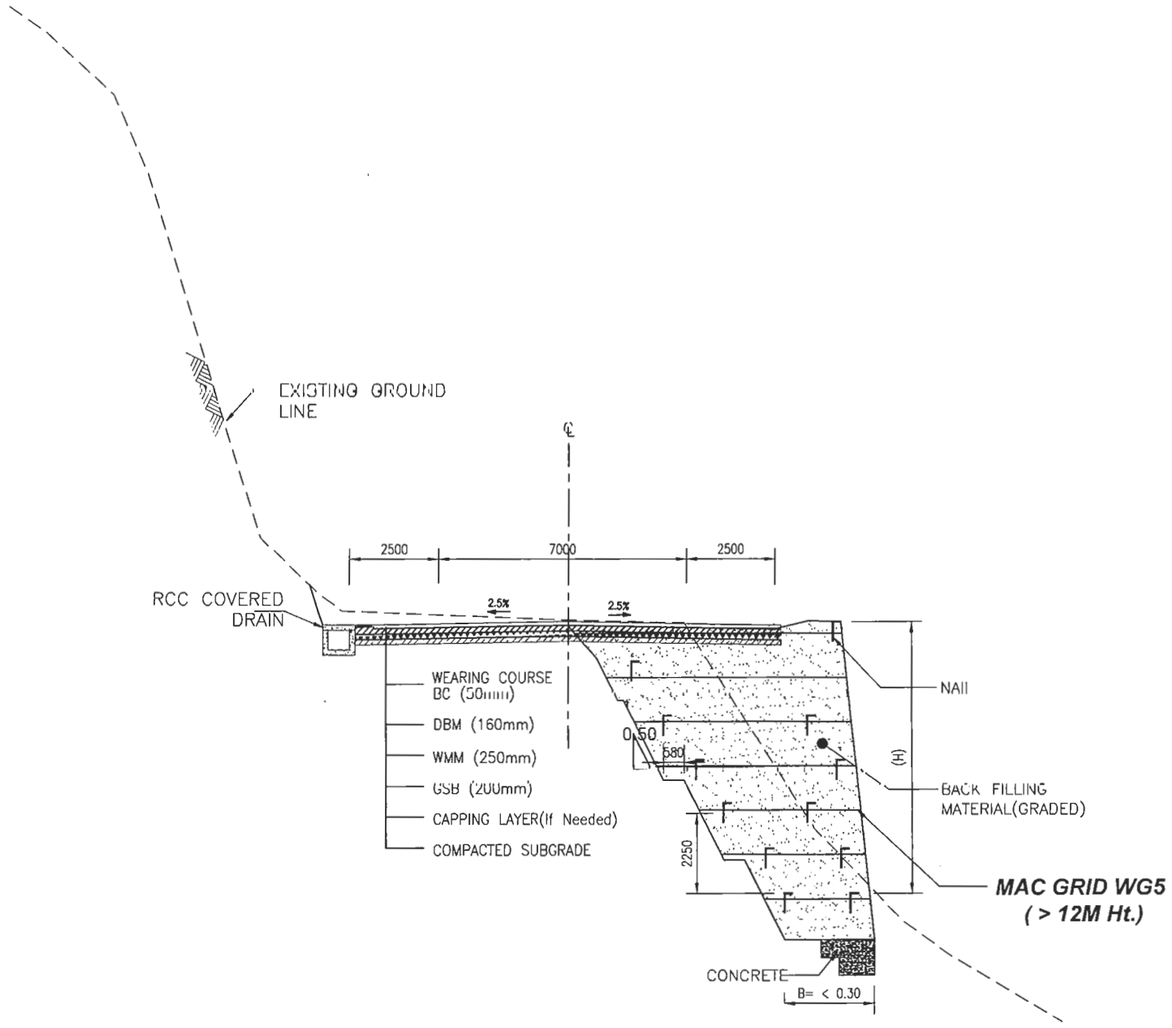


TCS TYPE - 6 : 2 LANE CARRIAGEWAY WITH GEO GRID WALL
(NEW CONSTR□CTION - 12.0 m WIDE)

NOTE :
SIDE DRAIN TYPE SHALL BE AS PER SITE RE□□IREMENTS.

| EMPLOYER | PROJECT | DESIGN CONSULTANT | | | | | | |
|---|---|---|---|---|---|---|---|---|
| Government of Nepal<br>Ministry of Physical Infrastructure and Transport<br>**Department of Roads**<br>**Development Cooperation Implementation Division** | Nepal India Regional Trade and Transport Project<br>(NIRTTP)<br>(IDA CREDIT No. 5273 - NEP)<br>Detailed Design for Improvement of Kathmandu (Nagdhunga) - Naubise - Mugling Road and Bridges | Intercontinental Consultants & Technocrats Pvt. Ltd.<br>A-8, Green Park, New Delhi - 110016<br>Ph : 4086-3000, Fax 2685-5252<br>In Joint Venture With<br>Soosung Engineering Co. Ltd., South Korea | In Association With<br>Full Bright Consultancy (Pvt.) Ltd.<br>316,Baburam Acharya Sadak<br>Sinamangal, Kathmandu, GPO Box: 4970, Kathmandu, Nepal | Designed By | SB | | **DRAWING NAME:**<br>TYPICAL CROSS SECTION | **Scale:**<br>NOT TO SCALE | **Date:**<br>August 2019 |
| | | | | Checked By | PMS | | | | **Drawing No.:**<br>NNMR-TYP 01-02 |
| | | | | Approved By | BNS | | | | |

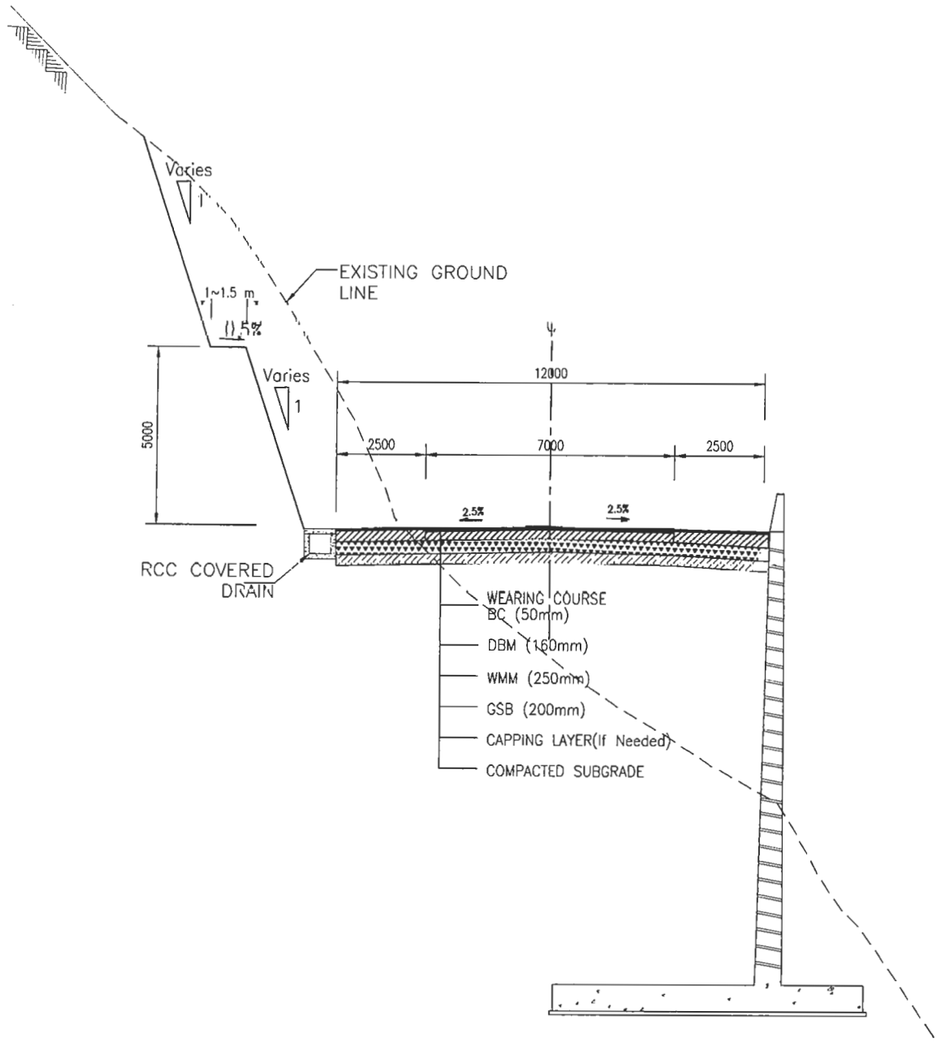


TCS TYPE -7: 2 LANE CARRIAGEWAY PARTLY C□T WITH RETAINING WALL
(NEW CONSTR□CTION - 12.0 m WIDE)

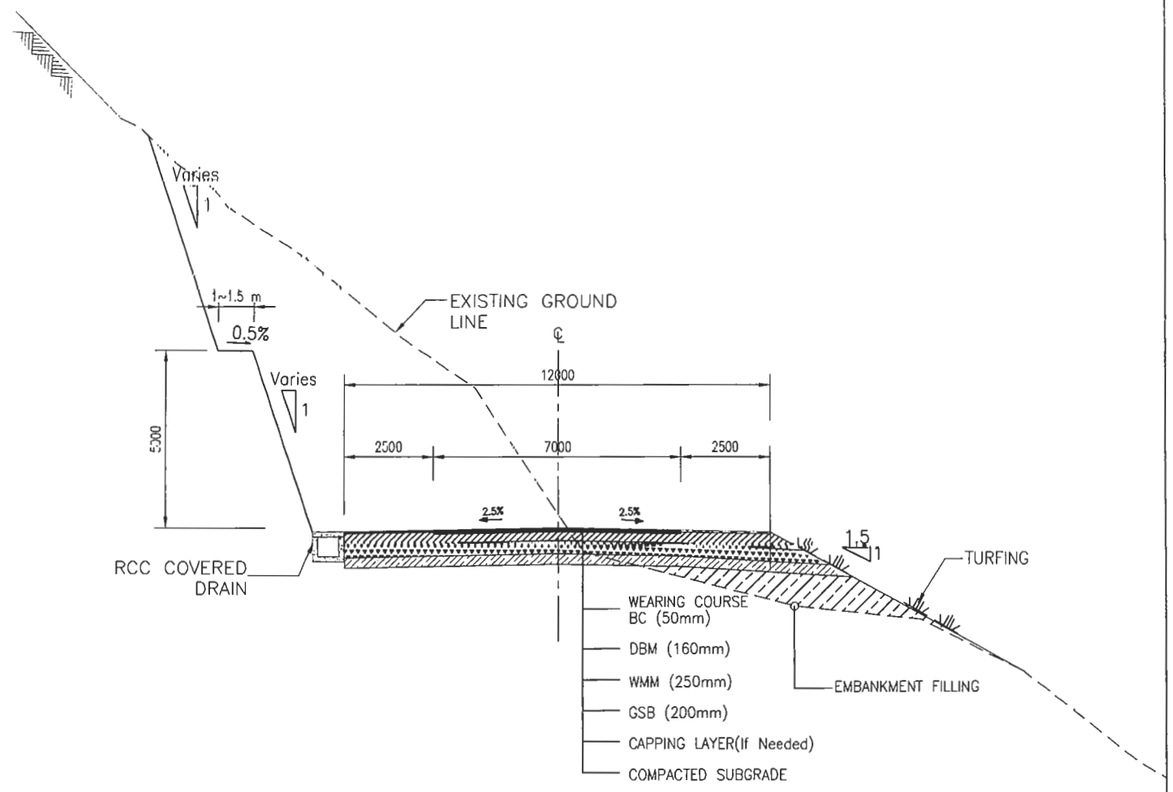


TCS TYPE -8: 2 LANE CARRIAGEWAY PARTLY C□T AND PARTLY FILL
(NEW CONSTR□CTION - 12.0 m WIDE)

NOTE :
SIDE DRAIN TYPE SHALL BE AS PER SITE RE□□IREMENTS.

| EMPLOYER | PROJECT | DESIGN CONSULTANT | | | | | |
|---|---|---|---|---|---|---|---|
| Government of Nepal<br>Ministry of Physical Infrastructure and Transport<br>**Department of Roads**<br>**Development Cooperation Implementation Division** | Nepal India Regional Trade and Transport Project<br>(NIRTTP)<br>(IDA CREDIT No. 5273 - NEP)<br>Detailed Design for Improvement of Kathmandu (Nagdhunga) - Naubise - Mugling Road and Bridges | Intercontinental Consultants & Technocrats Pvt. Ltd.<br>A-8, Green Park, New Delhi - 110016<br>Ph : 4086-3000, Fax 2685-5252<br>In Joint Venture With<br>Soosung Engineering Co. Ltd., South Korea | In Association With<br>Full Bright Consultancy (Pvt.) Ltd.<br>316,Baburam Acharya Sadak<br>Sinamangal, Kathmandu, GPO Box: 4970, Kathmandu, Nepal | Designed By | SB | **DRAWING NAME:**<br>TYPICAL CROSS SECTION | **Scale:**<br>NOT TO SCALE |
| | | | | Checked By | PMS | | **Date:**<br>August 2019 |
| | | | | Approved By | BNS | | **Drawing No.:**<br>NNMR-TYP 01-03 |

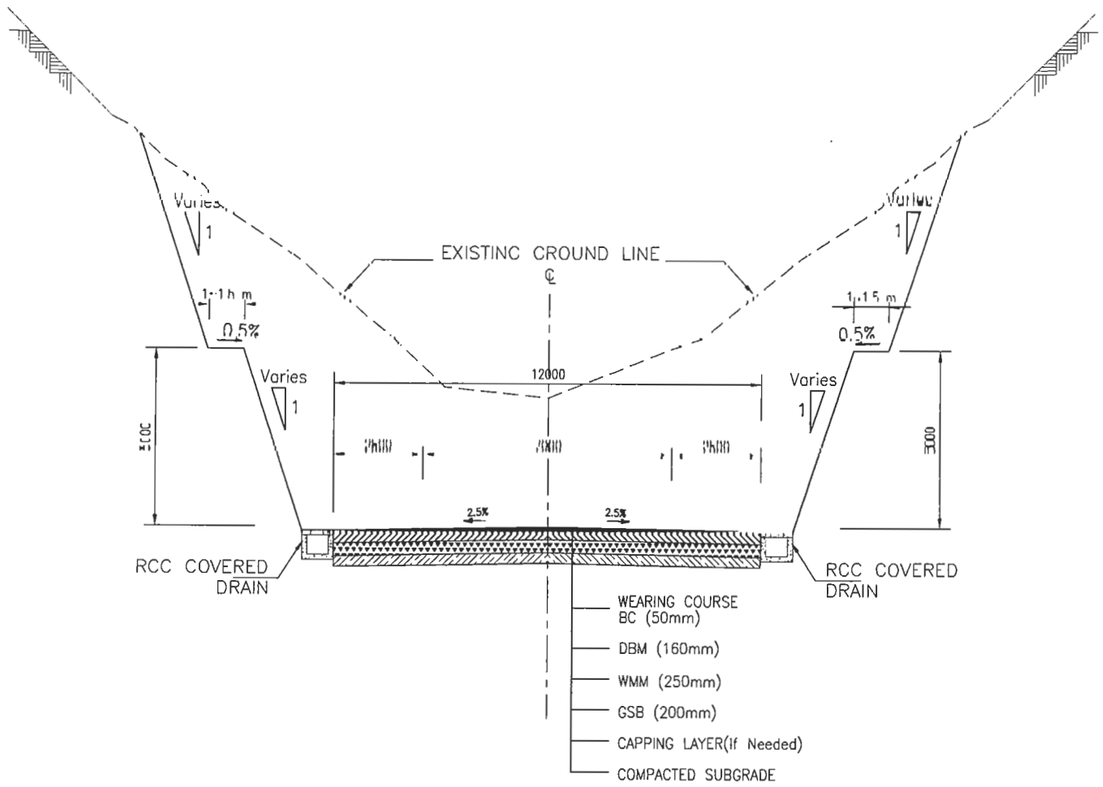


TCS TYPE - 9: 2 LANE CARRIAGEWAY (BOX C□T SECTION)
(NEW CONSTR□CTION - 12.0 m WIDE)

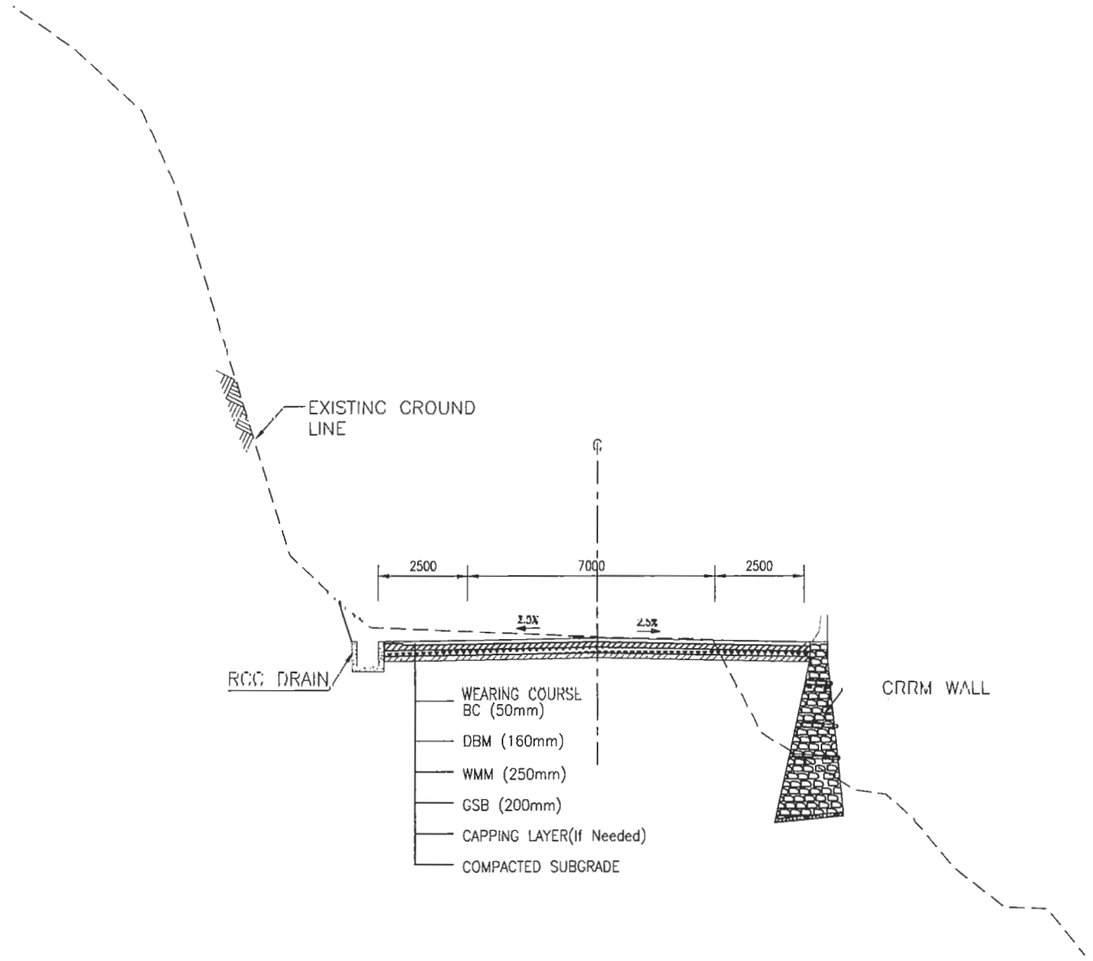


TCS TYPE - 3 : 2 LANE CARRIAGEWAY WITH CRRM WALL
(NEW CONSTR□CTION - 12.0 m WIDE)

NOTE :
SIDE DRAIN TYPE SHALL BE AS PER SITE RE□□IREMENTS.

| EMPLOYER | PROJECT | DESIGN CONSULTANT | | | | | | |
|---|---|---|---|---|---|---|---|---|
| Government of Nepal<br>Ministry of Physical Infrastructure and Transport<br>**Department of Roads**<br>**Development Cooperation Implementation Division** | Nepal India Regional Trade and Transport Project<br>(NIRTTP)<br>(IDA CREDIT No. 5273 - NEP)<br>Detailed Design for Improvement of Kathmandu (Nagdhunga) - Naubise - Mugling Road and Bridges | Intercontinental Consultants & Technocrats Pvt. Ltd.<br>A-8, Green Park, New Delhi - 110016<br>Ph : 4086-3000, Fax 2685-5252<br>In Joint Venture With<br>Soosung Engineering Co. Ltd., South Korea | In Association With<br>Full Bright Consultancy (Pvt.) Ltd.<br>316,Baburam Acharya Sadak<br>Sinamangal, Kathmandu, GPO Box: 4970, Kathmandu, Nepal | Designed By | SB | | **DRAWING NAME:**<br>TYPICAL CROSS SECTION | **Scale:**<br>NOT TO SCALE | **Date:**<br>August 2019 |
| | | | | Checked By | PMS | | | | **Drawing No.:**<br>NNMR-TYP 01-04 |
| | | | | Approved By | BNS | | | | |

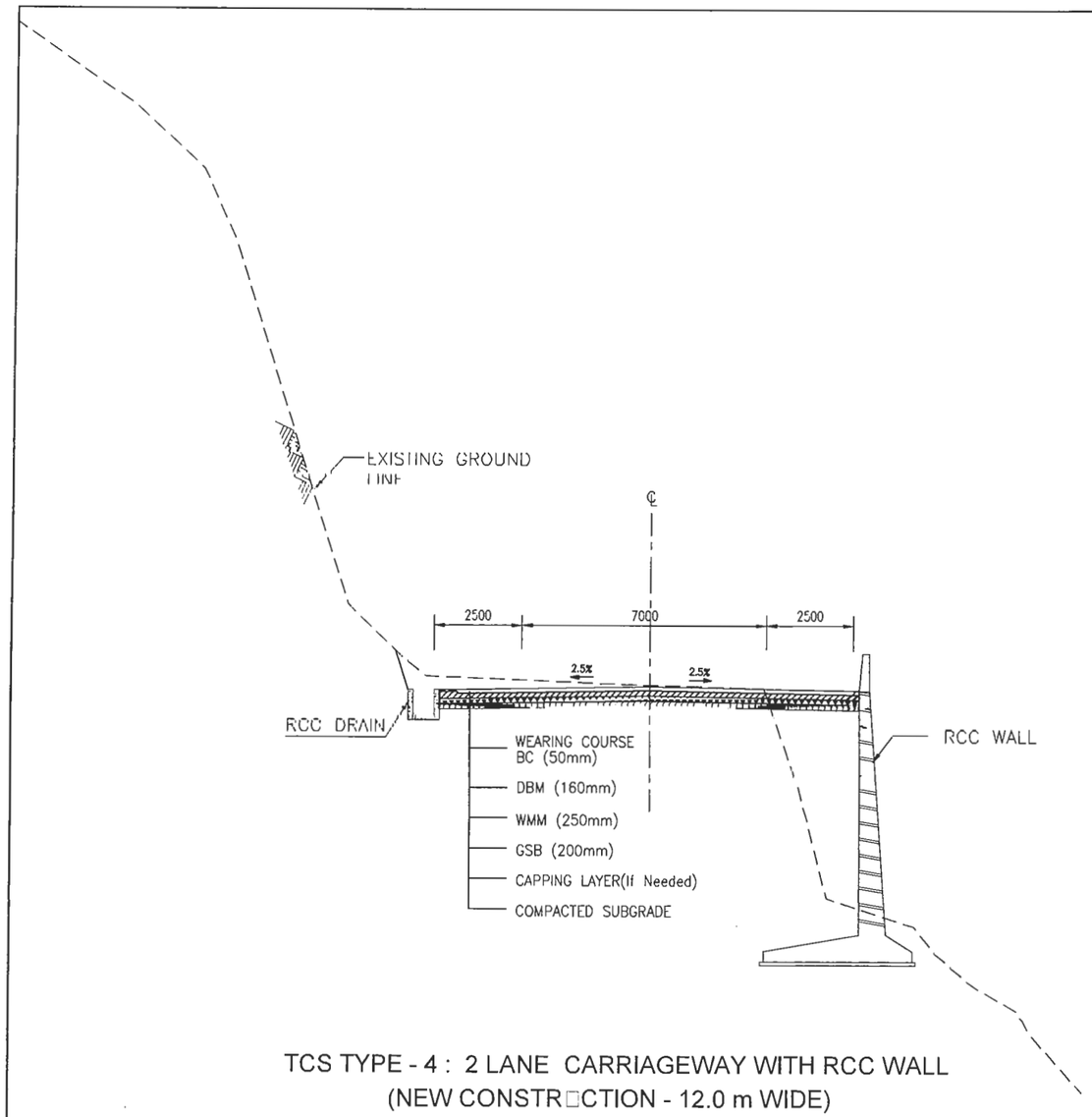


TCS TYPE - 4 : 2 LANE CARRIAGEWAY WITH RCC WALL
(NEW CONSTR□CTION - 12.0 m WIDE)

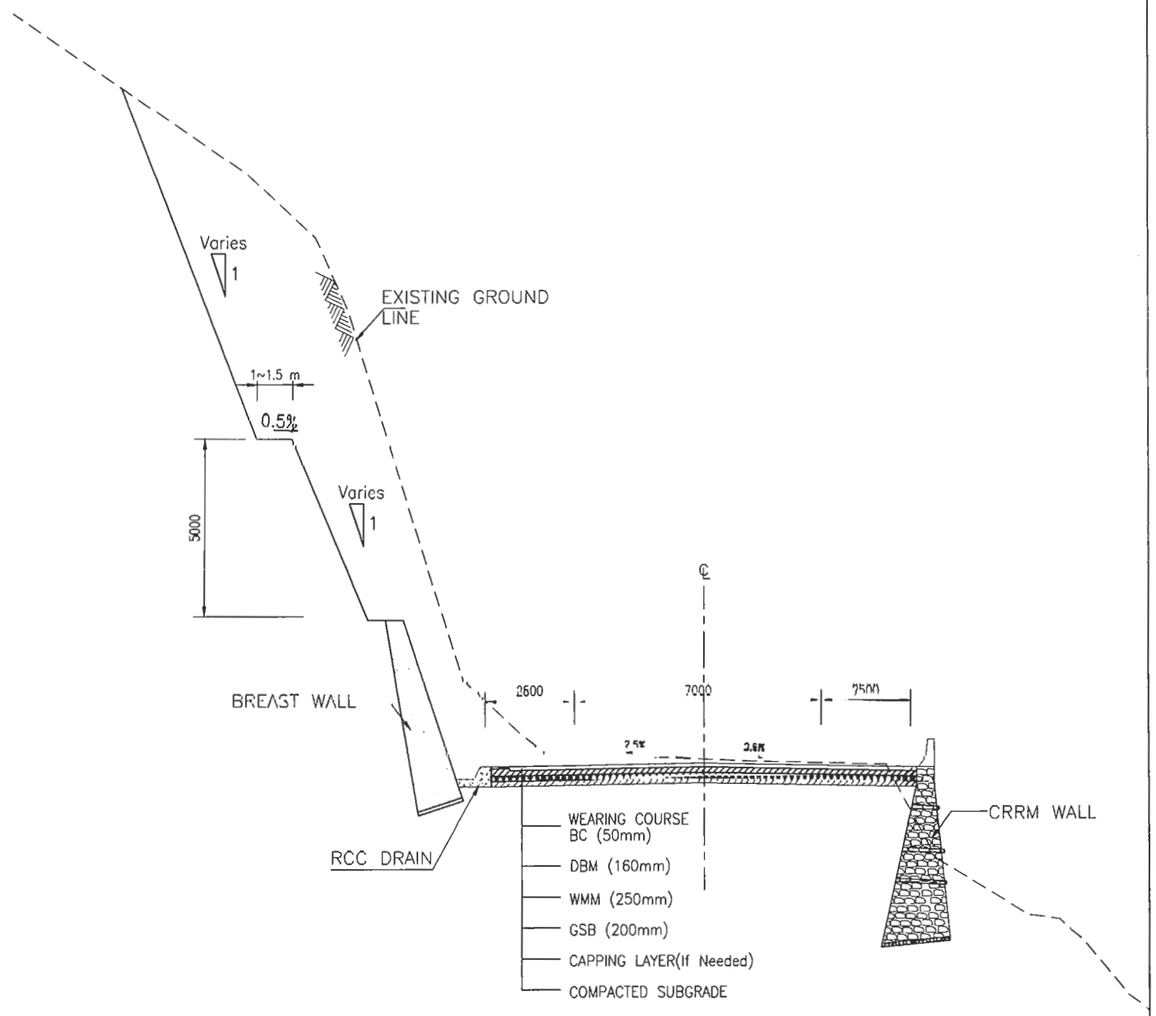


TCS TYPE - 5 : 2 LANE CARRIAGEWAY WITH CRRM WALL
(NEW CONSTR□CTION - 12.0 m WIDE)

NOTE :
SIDE DRAIN TYPE SHALL BE AS PER SITE RE□□IREMENTS.

| EMPLOYER | PROJECT | DESIGN CONSULTANT | | | | | | |
|---|---|---|---|---|---|---|---|---|
| Government of Nepal<br>Ministry of Physical Infrastructure and Transport<br>**Department of Roads**<br>**Development Cooperation Implementation Division** | Nepal India Regional Trade and Transport Project (NIRTTP)<br>(IDA CREDIT No. 5273 - NEP)<br>Detailed Design for Improvement of Kathmandu (Nagdhunga) - Naubise - Mugling Road and Bridges | Intercontinental Consultants & Technocrats Pvt. Ltd.<br>A-8, Green Park, New Delhi - 110016<br>Ph : 4086-3000, Fax 2685-5252<br>In Joint Venture With<br>Soosung Engineering Co. Ltd., South Korea | In Association With<br>Full Bright Consultancy (Pvt.) Ltd.<br>316,Baburam Acharya Sadak<br>Sinamangal, Kathmandu, GPO<br>Box: 4970, Kathmandu, Nepal | Designed By | SB | | **DRAWING NAME:**<br>TYPICAL CROSS SECTION | **Scale:**<br>NOT TO SCALE | **Date:**<br>August 2019 |
| | | | | Checked By | PMS | | | | **Drawing No.:**<br>NNMR-TYP 01-05 |
| | | | | Approved By | BNS | | | | |

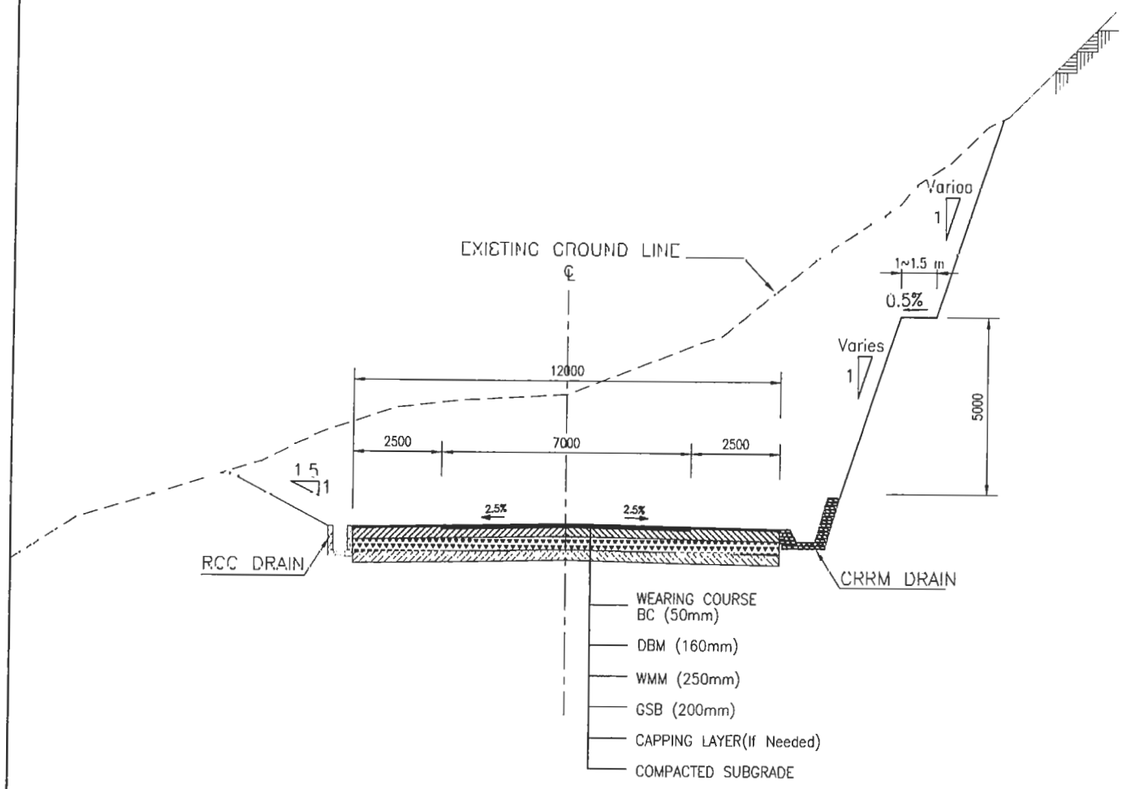


TCS TYPE - 6: 2 LANE CARRIAGEWAY (BOX C□T SECTION)
(NEW CONSTR□CTION - 12.0 m WIDE)

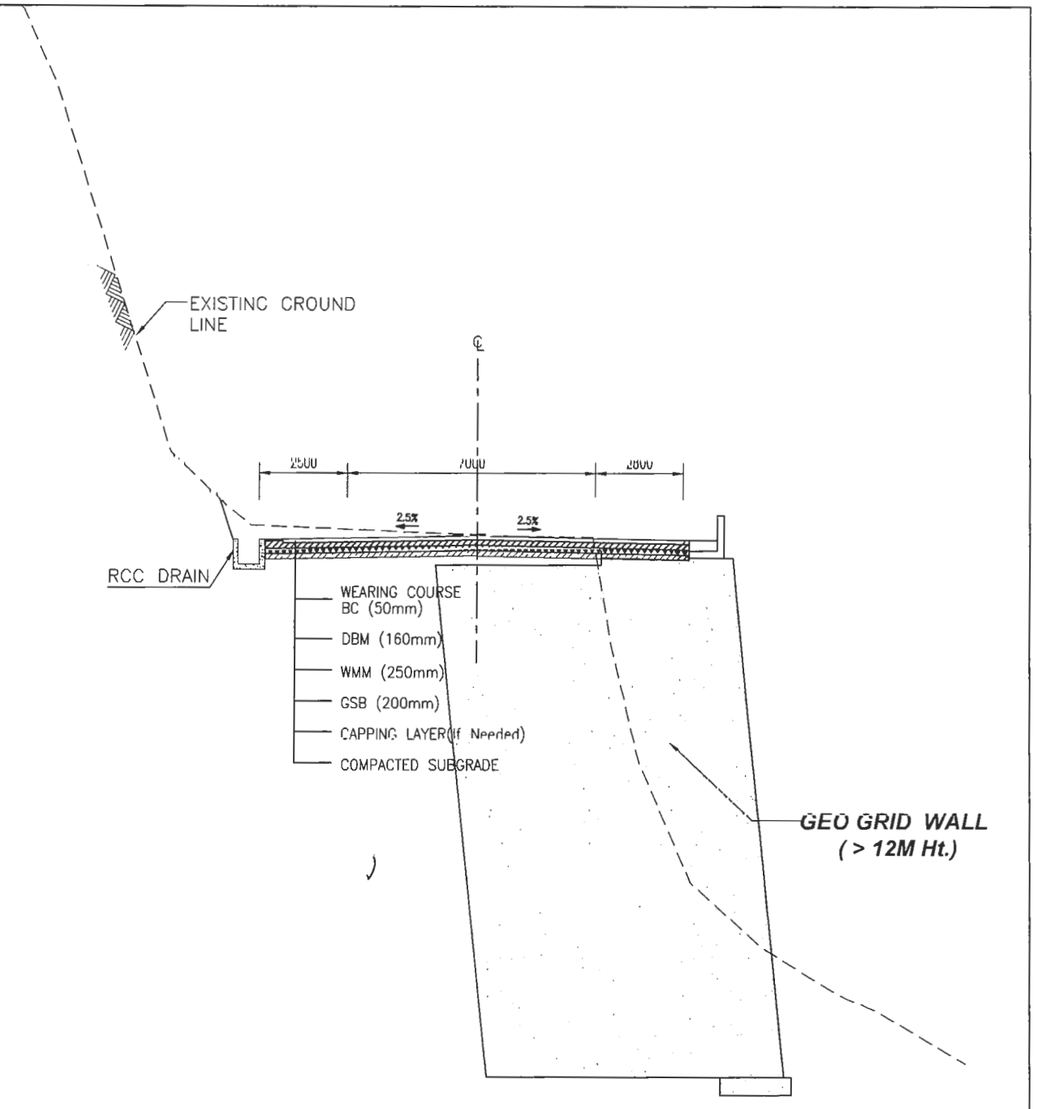


TCS TYPE - 8 : 2 LANE CARRIAGEWAY WITH GEO GRID WALL
(NEW CONSTR□CTION - 12.0 m WIDE)

| EMPLOYER | PROJECT | DESIGN CONSULTANT | | | | | | |
|---|---|---|---|---|---|---|---|---|
| Government of Nepal<br>Ministry of Physical Infrastructure and Transport<br>**Department of Roads**<br>**Development Cooperation Implementation Division** | Nepal India Regional Trade and Transport Project (NIRTTP)<br>(IDA CREDIT No. 5273 - NEP)<br>Detailed Design for Improvement of Kathmandu (Nagdhunga) - Naubise - Mugling Road and Bridges | Intercontinental Consultants & Technocrats Pvt. Ltd.<br>A-8, Green Park, New Delhi - 110016<br>Ph : 4086-3000, Fax 2685-5252<br>In Joint Venture With<br>Soosung Engineering Co. Ltd., South Korea | In Association With<br>Full Bright Consultancy (Pvt.) Ltd.<br>316,Baburam Acharya Sadak<br>Sinamangal, Kathmandu, GPO Box: 4970, Kathmandu, Nepal | Designed By | SB | | **DRAWING NAME:**<br>TYPICAL CROSS SECTION | **Scale:**<br>NOT TO SCALE | **Date:**<br>August 2019 |
| | | | | Checked By | PMS | | | | **Drawing No.:**<br>NNMR-TYP 01-06 |
| | | | | Approved By | BNS | | | | |

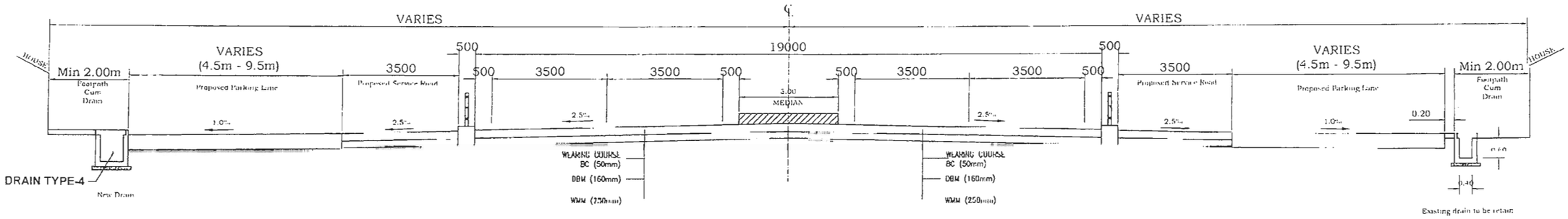


PROPOSED CROSS SECTION AT MARKET AREA AT MUGLING AREA (40-50M WIDE)

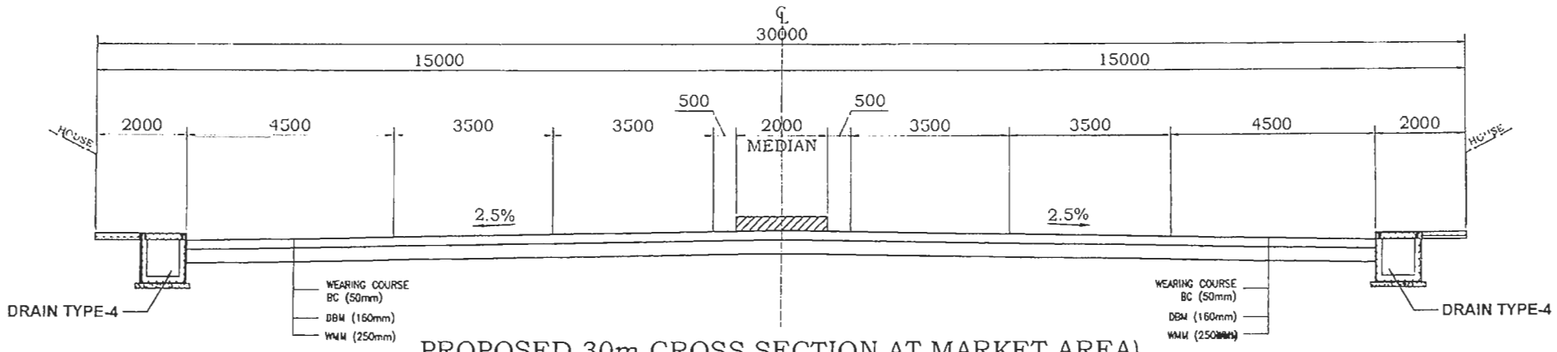


PROPOSED 30m CROSS SECTION AT MARKET AREA)

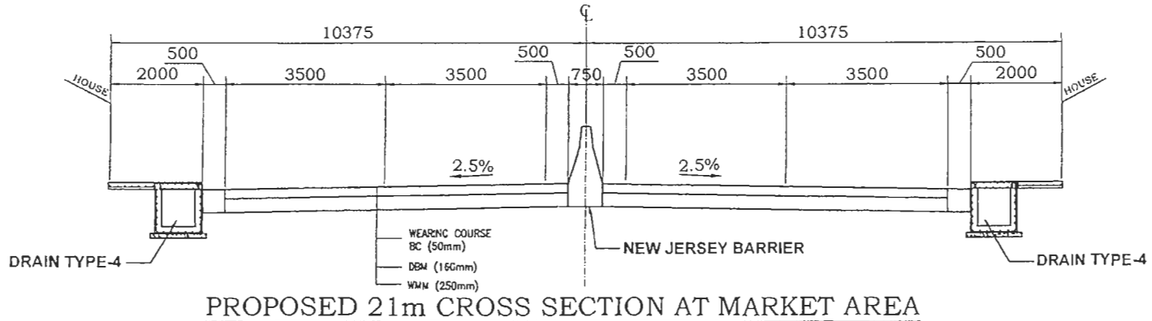


PROPOSED 21m CROSS SECTION AT MARKET AREA

| EMPLOYER | PROJECT | DESIGN CONSULTANT | | | DRAWING NAME: | Scale: | Date: |
|---|---|---|---|---|---|---|---|
| Government of Nepal<br>Ministry of Physical Infrastructure and Transport<br>Department of Roads<br>Development Cooperation Implementation Division | Nepal India Regional Trade and Transport Project<br>(NIRTTP)<br>(IDA CREDIT No. 5273 - NEP)<br>Detailed Design for Improvement of Kathmandu (Nagdhunga) - Naubise - Mugling Road and Bridges | Intercontinental Consultants & Technocrats Pvt. Ltd.<br>A-8, Green Park, New Delhi - 110016<br>Ph : 4086-3000 Fax 2685-5252<br>In Joint Venture With<br>Soosung Engineering Co. Ltd., South Korea | In Association With<br>Full Bright Consultancy (Pvt.) Ltd.<br>316,Baburam Acharya Sadak<br>Sinamangal, Kathmandu, GPO Box: 4970, Kathmandu, Nepal | Designed By: SB<br>Checked By: PMS<br>Approved By: BNS | TYPICAL CROSS SECTION AT MARKET AREA | 0 0.5 1.0 1.5 2.0 | August 2019<br>Drawing No.: NNMR-TYP 01-07 |

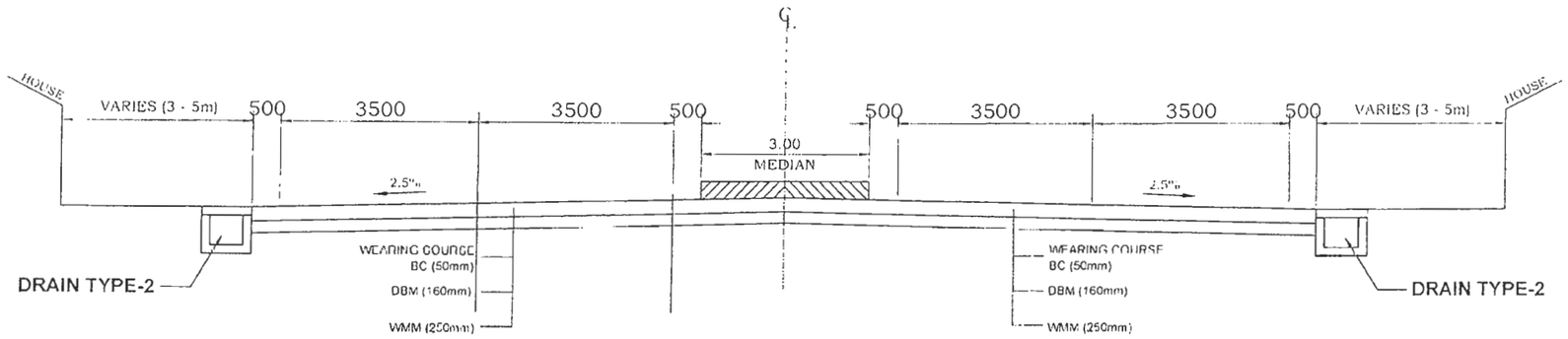


PROPOSED CROSS SECTION AT LEWATAR TO RAMAILO DANDA

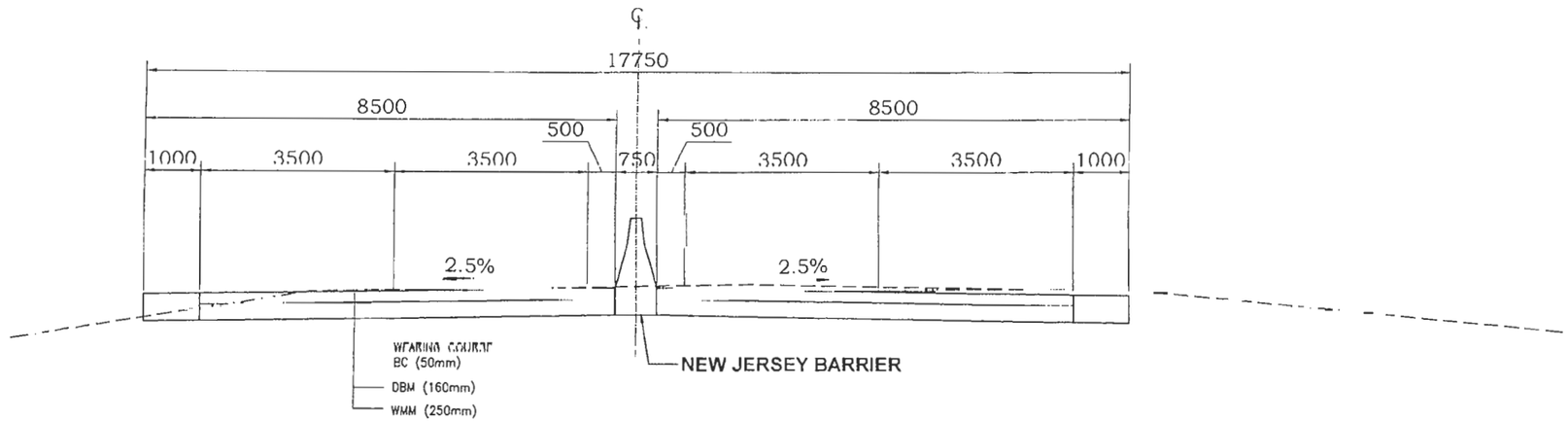


AREAS WHERE EXTRA LANE IS ADDED ON BOTH SIDES-CROSS SECTION

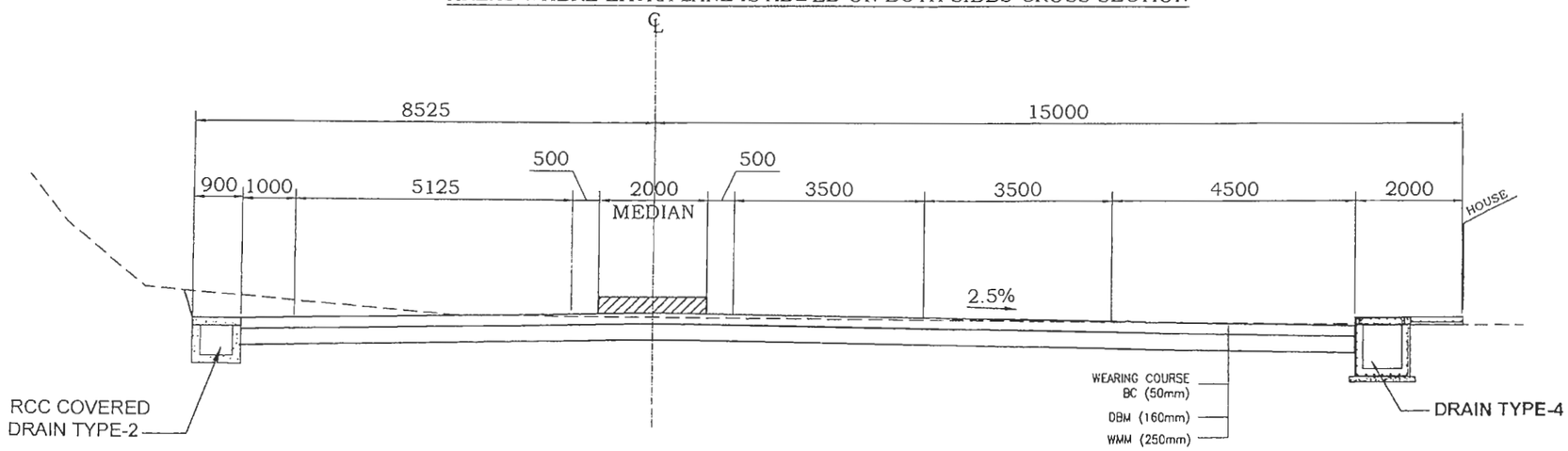


SETTLEMENTS ON ONE SIDES OF THE HIGHWAY-CROSS SECTION

| EMPLOYER | PROJECT | DESIGN CONSULTANT | | | | | |
|---|---|---|---|---|---|---|---|
| Government of Nepal<br>Ministry of Physical Infrastructure and Transport<br>Department of Roads<br>Development Cooperation Implementation Division | Nepal India Regional Trade and Transport Project (NIRTTP)<br>(IDA CREDIT No. 5273 - NEP)<br>Detailed Design for Improvement of Kathmandu (Nagdhunga) - Naubise - Mugling Road and Bridges | Intercontinental Consultants & Technocrats Pvt. Ltd.<br>A-8, Green Park, New Delhi - 110016<br>Ph : 4086-3000, Fax 2685-5252<br>In Joint Venture With<br>Soosung Engineering Co. Ltd , South Korea | In Association With<br>Full Bright Consultancy (Pvt.) Ltd<br>316,Baburam Acharya Sadak<br>Sinamangal, Kathmandu, GPO<br>Box: 4970, Kathmandu, Nepal | Designed By | SB | DRAWING NAME: | Scale: |
| | | | | Checked By | PMS | TYPICAL CROSS SECTION AT MARKET AREA | Date: August 2019 |
| | | | | Approved By | BNS | | Drawing No.: NNMR-TYP 01-08 |

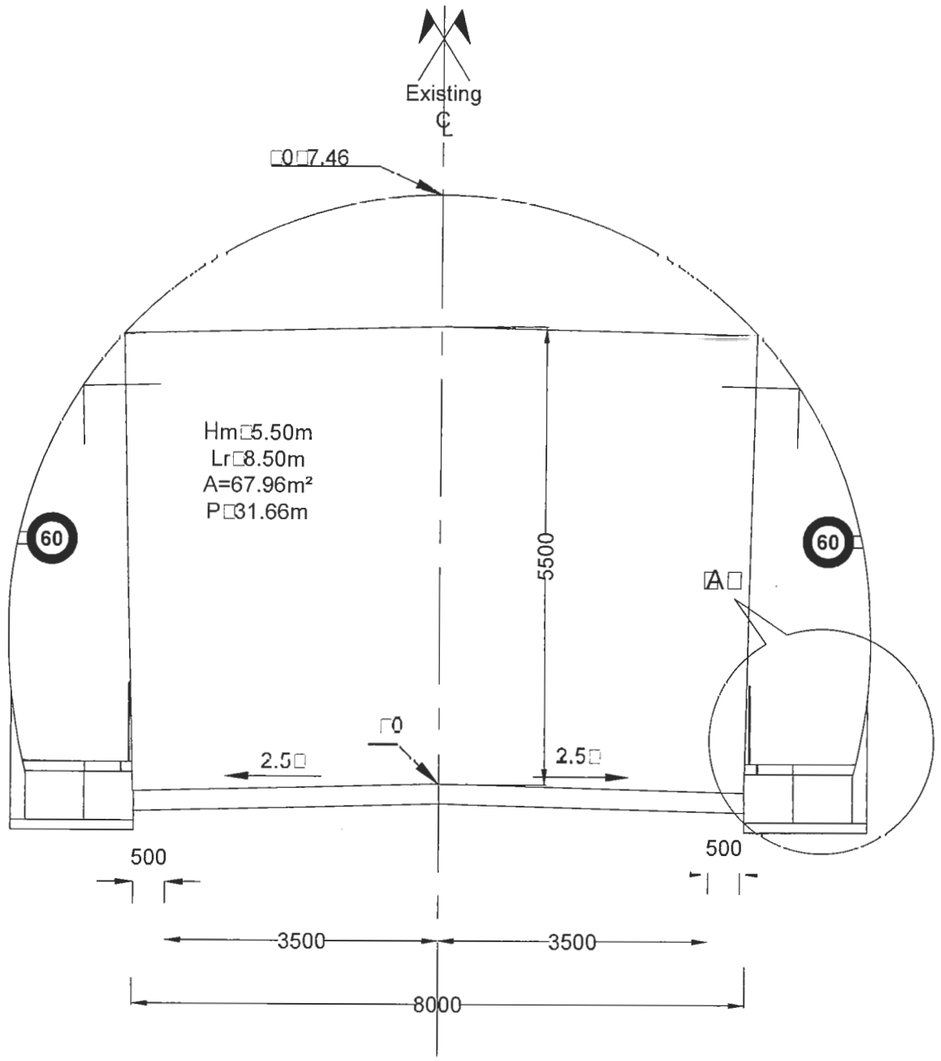


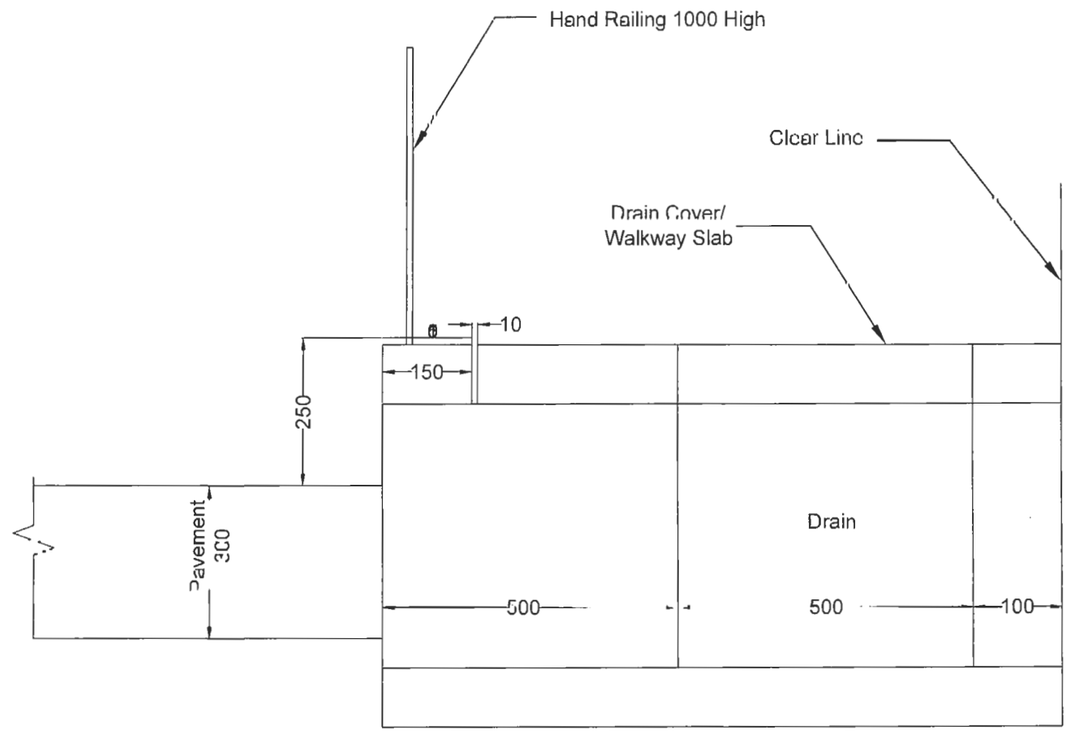


DETAILS 'A' : FOOTPATH WITH DRAIN

# 2 LANE CARRIAGEWAY TUNNEL ( SHORT TUNNEL SECTION )

| EMPLOYER | PROJECT | DESIGN CONSULTANT | | | | | | |
|---|---|---|---|---|---|---|---|---|
| Government of Nepal<br>Ministry of Physical Infrastructure and Transport<br>**Department of Roads**<br>**Development Cooperation Implementation Division** | Nepal India Regional Trade and Transport Project<br>(NIRTTP)<br>(IDA CREDIT No. 5273 - NEP)<br>Detailed Design for Improvement of Kathmandu (Nagdhunga) - Naubise - Mugling Road and Bridges | Intercontinental Consultants & Technocrats Pvt. Ltd.<br>A-8, Green Park, New Delhi - 110016<br>Ph : 4086-3000, Fax 2685-5252<br>In Joint Venture With<br>Soosung Engineering Co. Ltd., South Korea | In Association With<br>Full Bright Consultancy (Pvt.) Ltd.<br>316,Baburam Acharya Sadak<br>Sinamangal, Kathmandu, GPO Box: 4970, Kathmandu, Nepal | Designed By | SB | **DRAWING NAME:**<br>TYPICAL CROSS SECTION | **Scale:**<br>1:100 | **Date:**<br>August 2019 |
| | | | | Checked By | PMS | | | **Drawing No.:**<br>NNMR-TCS-09 |
| | | | | Approved By | BNS | | | |

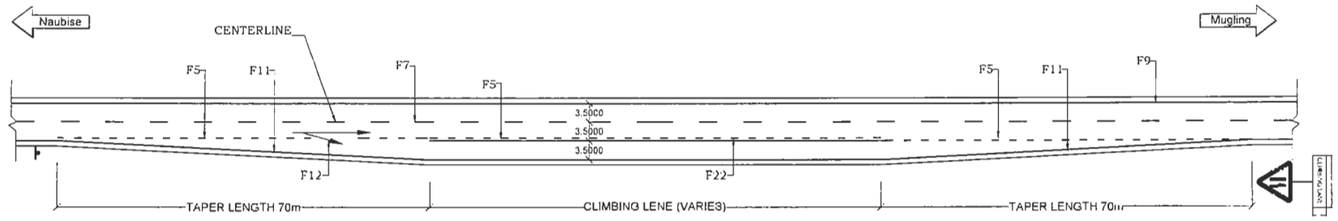


TYPICAL DETAILS OF CLIMBING/ADDITIONAL LANE ON ONE SIDE

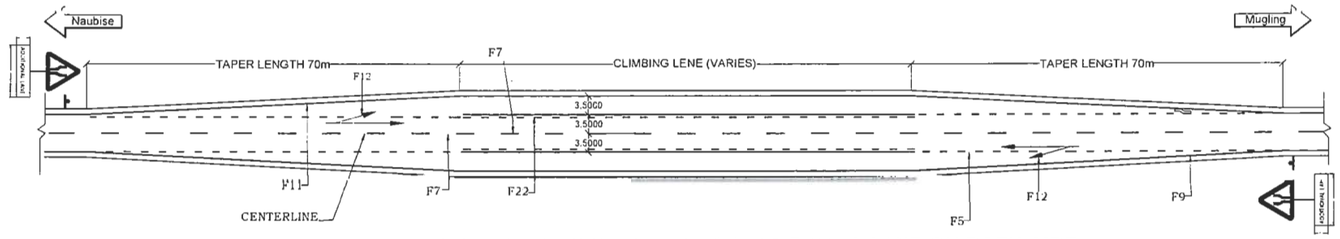


TYPICAL DETAILS OF CLIMBING/ADDITIONAL LANE ON BOTH SIDE

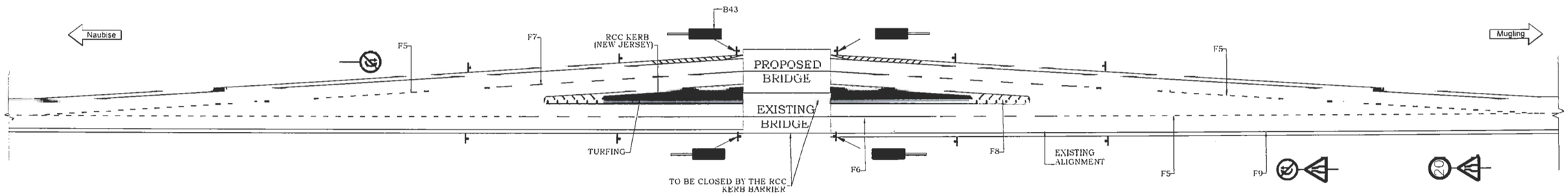


TYPICAL BRIDGE APPROACH

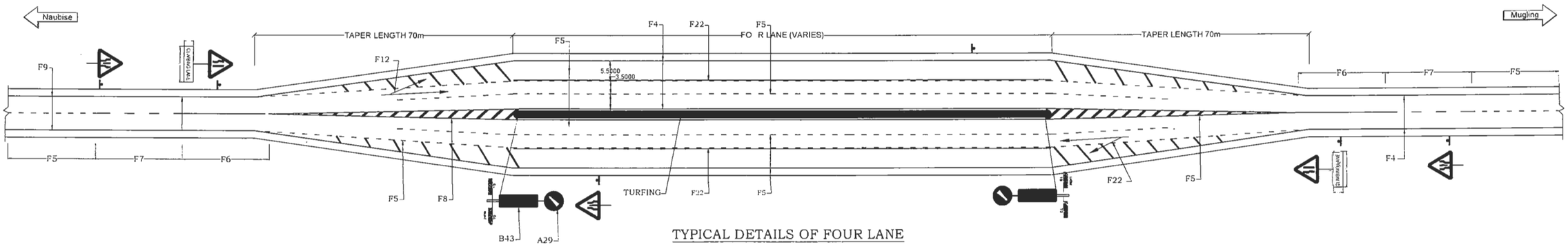


TYPICAL DETAILS OF FOUR LANE

| EMPLOYER | PROJECT | DESIGN CONSULTANT | | | | | | |
|---|---|---|---|---|---|---|---|---|
| Government of Nepal<br>Ministry of Physical Infrastructure and Transport<br>**Department of Roads**<br>**Development Cooperation Implementation Division** | Nepal India Regional Trade and Transport Project (NIRTTP)<br>(IDA CREDIT No. 5273 - NEP)<br>Detailed Design for Improvement of Kathmandu (Nagdhunga) - Naubise - Mugling Road and Bridges | Intercontinental Consultants & Technocrats Pvt. Ltd.<br>A-8, Green Park, New Delhi - 110016<br>Ph : 4086-3000, Fax 2685-5252<br>In Joint Venture With<br>Soosung Engineering Co. Ltd., South Korea | In Association With<br>Full Bright Consultancy (Pvt.) Ltd.<br>316,Baburam Acharya Sadak<br>Sinamangal, Kathmandu, GPO<br>Box: 4970, Kathmandu, Nepal | Designed By | SB | **DRAWING NAME:**<br>TYPICAL PLAN<br>AT MARKET AREA, BRIDGE APPROACH & EXTRA LANE | **Scale:** | **Date:**<br>August 2019 |
| | | | | Checked By | PMS | | | **Drawing No.:**<br>NNMR-TYP 02-10 |
| | | | | Approved By | BNS | | | |

# JUNCTION DETAILS

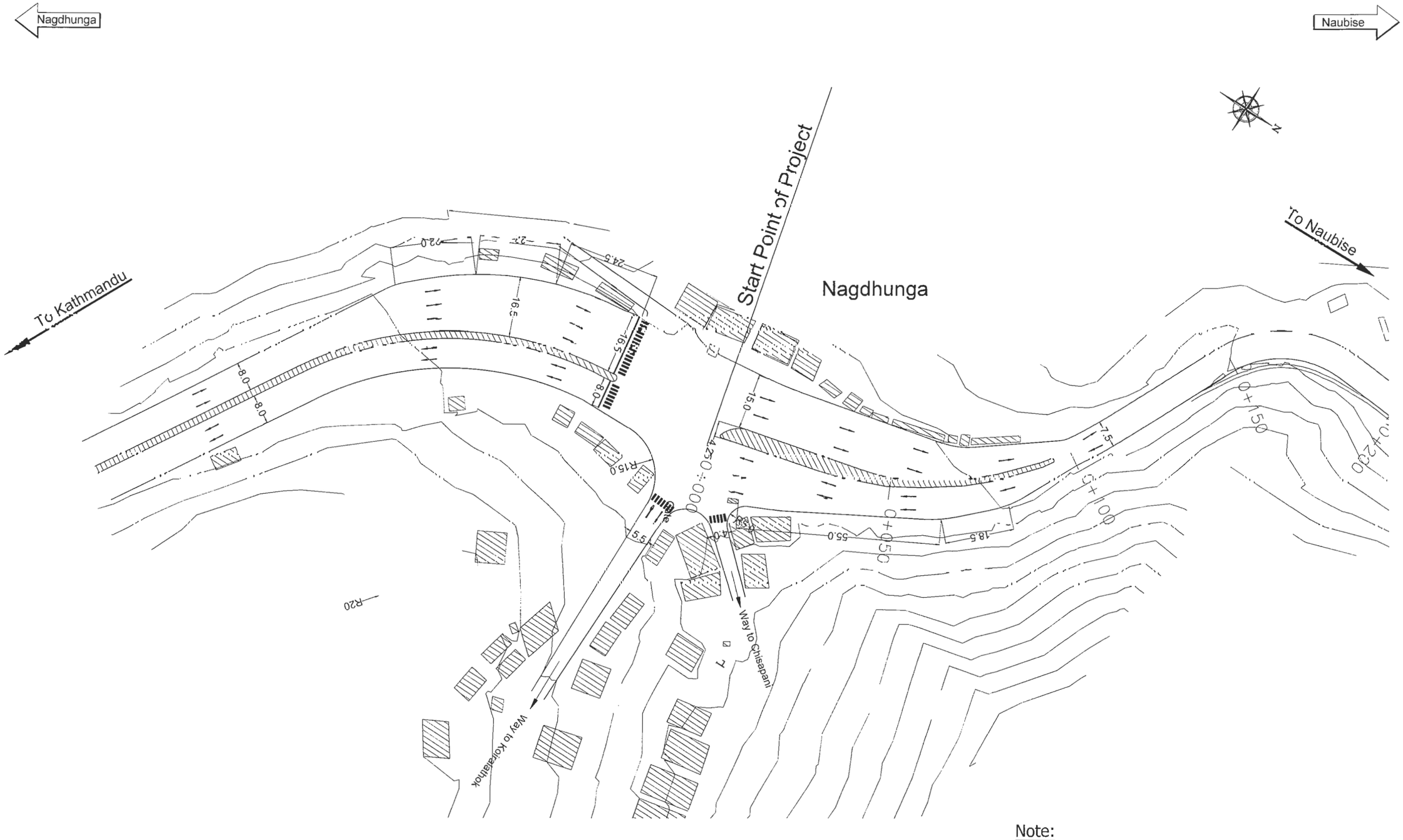


Note:

1. Junction plan to be modified during the construction time, as per site condition.

| EMPLOYER | PROJECT | DESIGN CONSULTANT | | | | | |
|---|---|---|---|---|---|---|---|
| Government of Nepal<br>Ministry of Physical Infrastructure and Transport<br>**Department of Roads**<br>**Development Cooperation Implementation Division** | Nepal India Regional Trade and Transport Project (NIRTTP)<br>(IDA CREDIT No. 5273 - NEP)<br>Detailed Design of Kathmandu (Nagdhunga) -Naubise - Mugling Road and Bridges | Intercontinental Consultants & Technocrats Pvt.Ltd.<br>A-8, Green Park, New Delhi - 110016<br>Ph : 4086-3000, Fax 2685-5252<br>In Joint Venture With<br>Soosung Engineering Co. Ltd., South Korea<br>FBC<br>In Association With<br>Full Bright Consultancy (Pvt.) Ltd.<br>316,Baburam Acharya Sadak,<br>Sinamangal, Kathmandu, GPO Box: 4970, Kathmandu, Nepal | Designed By | SB | DRAWING NAME: | Scale: | Date: August 2019 |
| | | | Checked By | PMS | NAGDHUNGA JUNCTION AT Km.0.000 | 0 10 20 30 40 | Drawing No.: |
| | | | Approved By | BNS | | | NNMR-JUNC-001 |

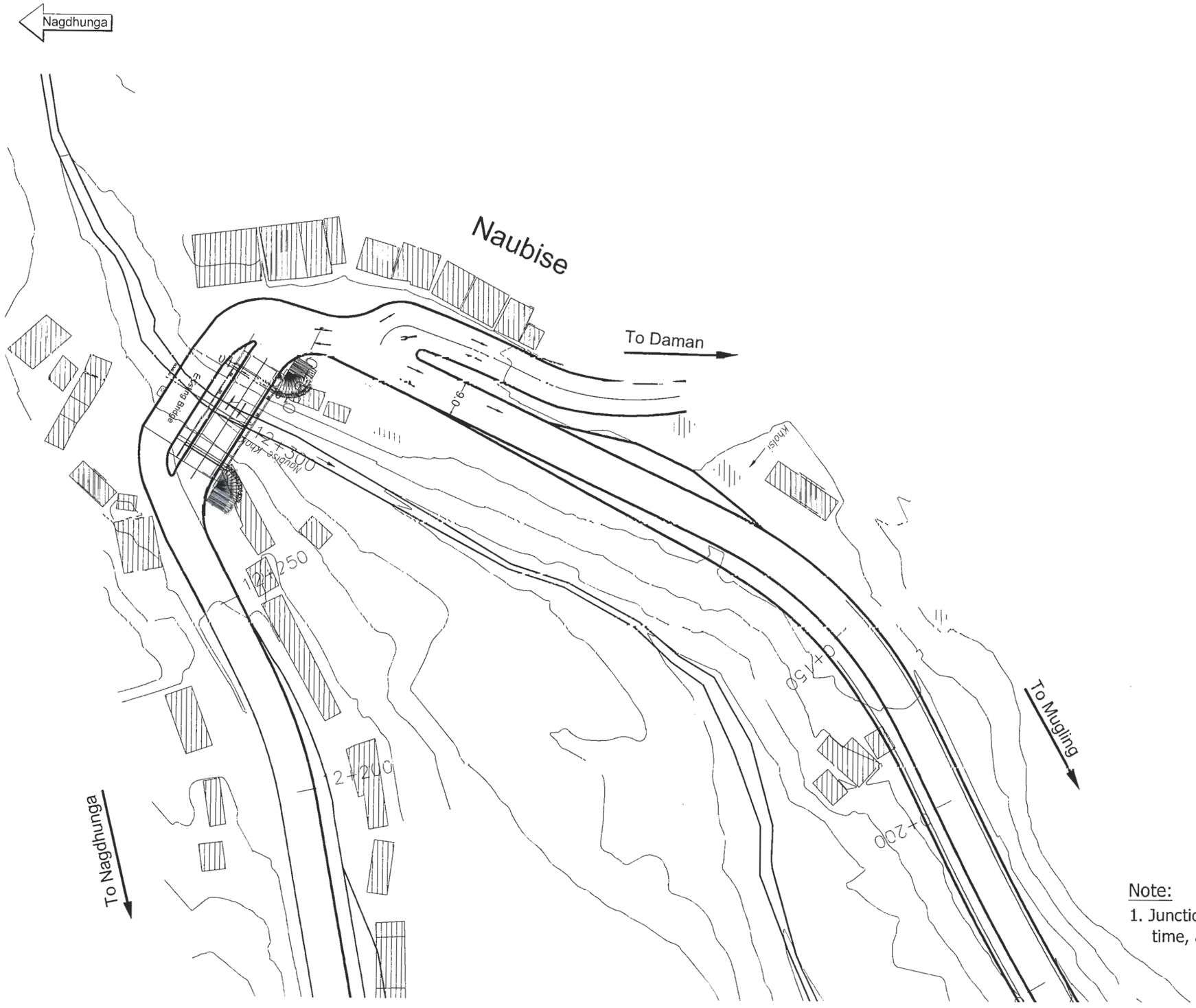


Note:

1. Junction plan to be modified during the construction time, as per site condition.

| EMPLOYER | PROJECT | DESIGN CONSULTANT | | | | | |
|---|---|---|---|---|---|---|---|
| Government of Nepal<br>Ministry of Physical Infrastructure and Transport<br>**Department of Roads**<br>**Development Cooperation Implementation Division** | Nepal India Regional Trade and Transport Project (NIRTTP)<br>(IDA CREDIT No. 5273 - NEP)<br>Detailed Design of Kathmandu (Nagdhunga) -Naubise - Mugling Road and Bridges | Intercontinental Consultants & Technocrats Pvt.Ltd.<br>A-8, Green Park, New Delhi - 110016<br>Ph : 4086-3000, Fax 2685-5252<br>In Joint Venture With<br>Soosung Engineering Co. Ltd., South Korea<br>FBC<br>In Association With<br>Full Bright Consultancy (Pvt.) Ltd.<br>316,Baburam Acharya Sadak,<br>Sinamangal, Kathmandu, GPO<br>Box. 4970. Kathmandu, Nepal | Designed By | SB | DRAWING NAME: | Scale: | Date: August 2019 |
| | | | Checked By | PMS | NA□BISE J□NCTION AT Km. 0□000 | 0 10 20 30 40 | Drawing No.: |
| | | | Approved By | BNS | | | NNMR-J□NC-002 |

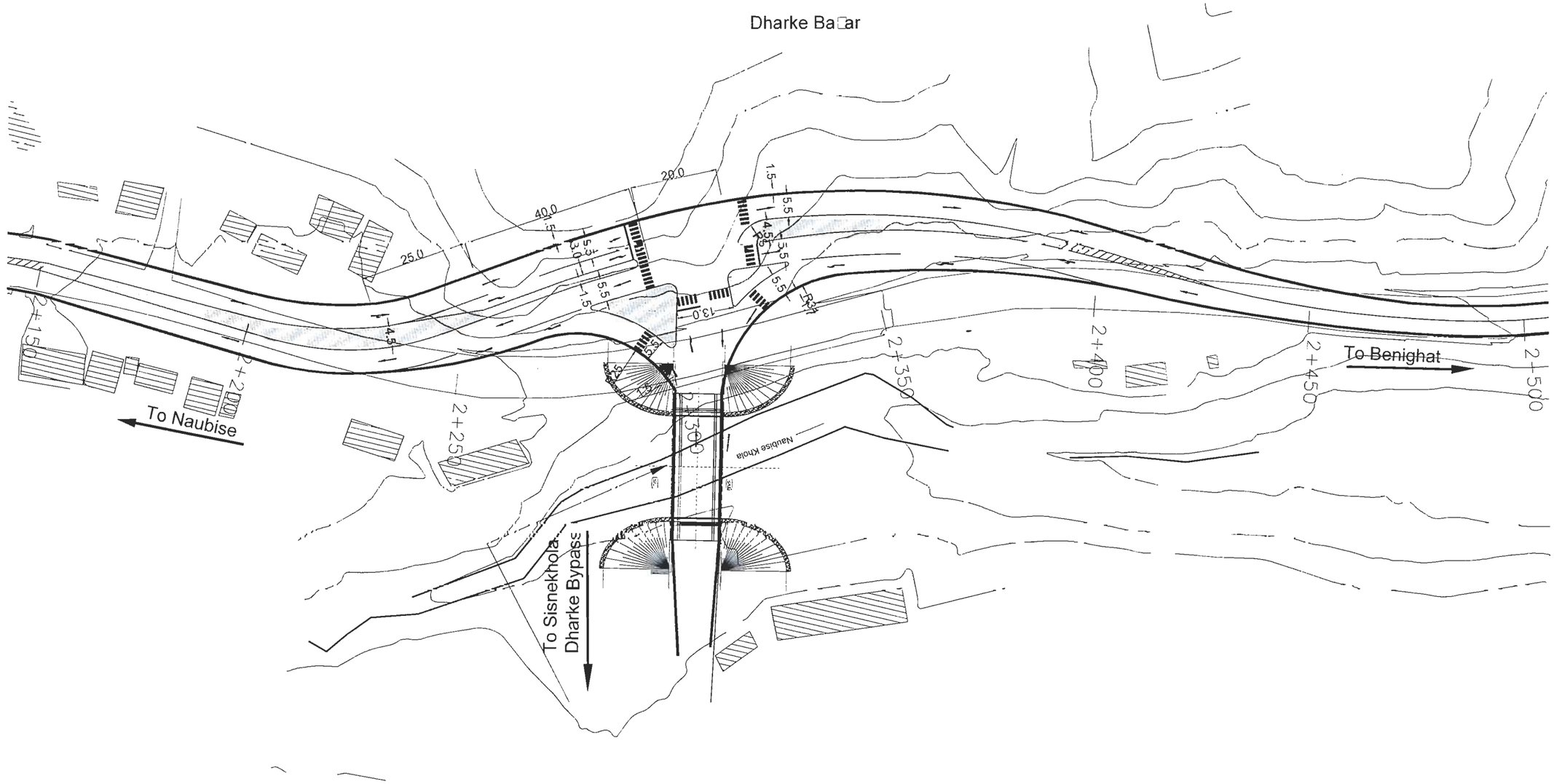


Note:

1. Junction plan to be modified during the construction time, as per site condition.

| EMPLOYER | PROJECT | DESIGN CONS□LTANT | | | | | |
|---|---|---|---|---|---|---|---|
| Government of Nepal<br>Ministry of Physical Infrastructure and Transport<br>**Department of Roads**<br>**Development Cooperation Implementation Division** | Nepal India Regional Trade and Transport Project (NIRTTP)<br>(IDA CREDIT No. 5273 - NEP)<br>Detailed Design of Kathmandu (Nagdhunga) -Naubise - Mugling Road and Bridges | Intercontinental Consultants & Technocrats Pvt.Ltd.<br>A-8, Green Park, New Delhi - 110016<br>Ph : 4086-3000, Fax 2685-5252<br>In Joint Venture With<br>Soosung Engineering Co. Ltd., South Korea<br>FBC<br>In Association With<br>Full Bright Consultancy (Pvt.) Ltd.<br>316,Baburam Acharya Sadak,<br>Sinamangal, Kathmandu, GPO Box 4970, Kathmandu, Nepal | Designed By | SB | DRAWING NAME: | Scale: | Date: August 2019 |
| | | | Checked By | PMS | SISNEKHOLA - DHARKE J□NCTION AT Km. 2□300 (OPTION 2) | 0 10 20 30 40 | Drawing No.: |
| | | | Approved By | BNS | | | NNMR-J□NC-003 |

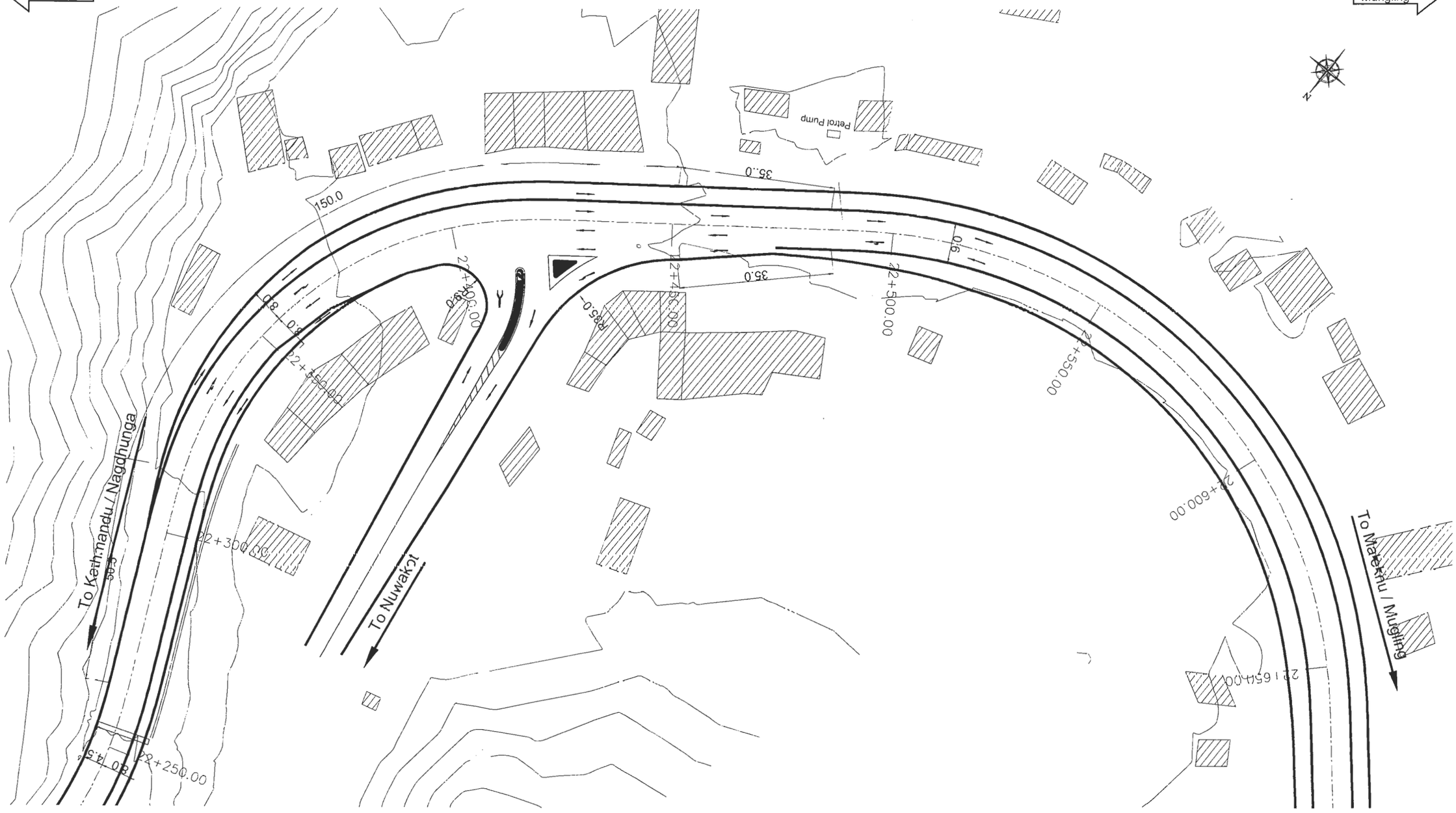


Note:

1. Junction plan to be modified during the construction time, as per site condition.

| EMPLOYER | PROJECT | DESIGN CONSULTANT | | | | | |
|---|---|---|---|---|---|---|---|
| Government of Nepal<br>Ministry of Physical Infrastructure and Transport<br>**Department of Roads**<br>**Development Cooperation Implementation Division** | Nepal India Regional Trade and Transport Project (NIRTTP)<br>(IDA CREDIT No. 5273 - NEP)<br>Detailed Design of Kathmandu (Nagdhunga) -Naubise - Mugling Road and Bridges | Intercontinental Consultants & Technocrats Pvt.Ltd,<br>A-8, Green Park, New Delhi - 110016<br>Ph : 4086-3000, Fax 2685-5252<br>In Joint Venture With<br>Soosung Engineering Co. Ltd., South Korea<br>In Association With<br>Full Bright Consultancy (Pvt.) Ltd.<br>316,Baburam Acharya Sadak,<br>Sinamangal, Kathmandu, GPO Box: 4970. Kathmandu, Nepal | Designed By | SB | DRAWING NAME: | Scale: | Date: August 2019 |
| | | | Checked By | PMS | GALCHI-NAUWAKOT JUNCTION AT Km. 22+420 | 0 10 20 30 40 | Drawing No.: |
| | | | Approved By | BNS | | | NNMR-JUNC-004 |

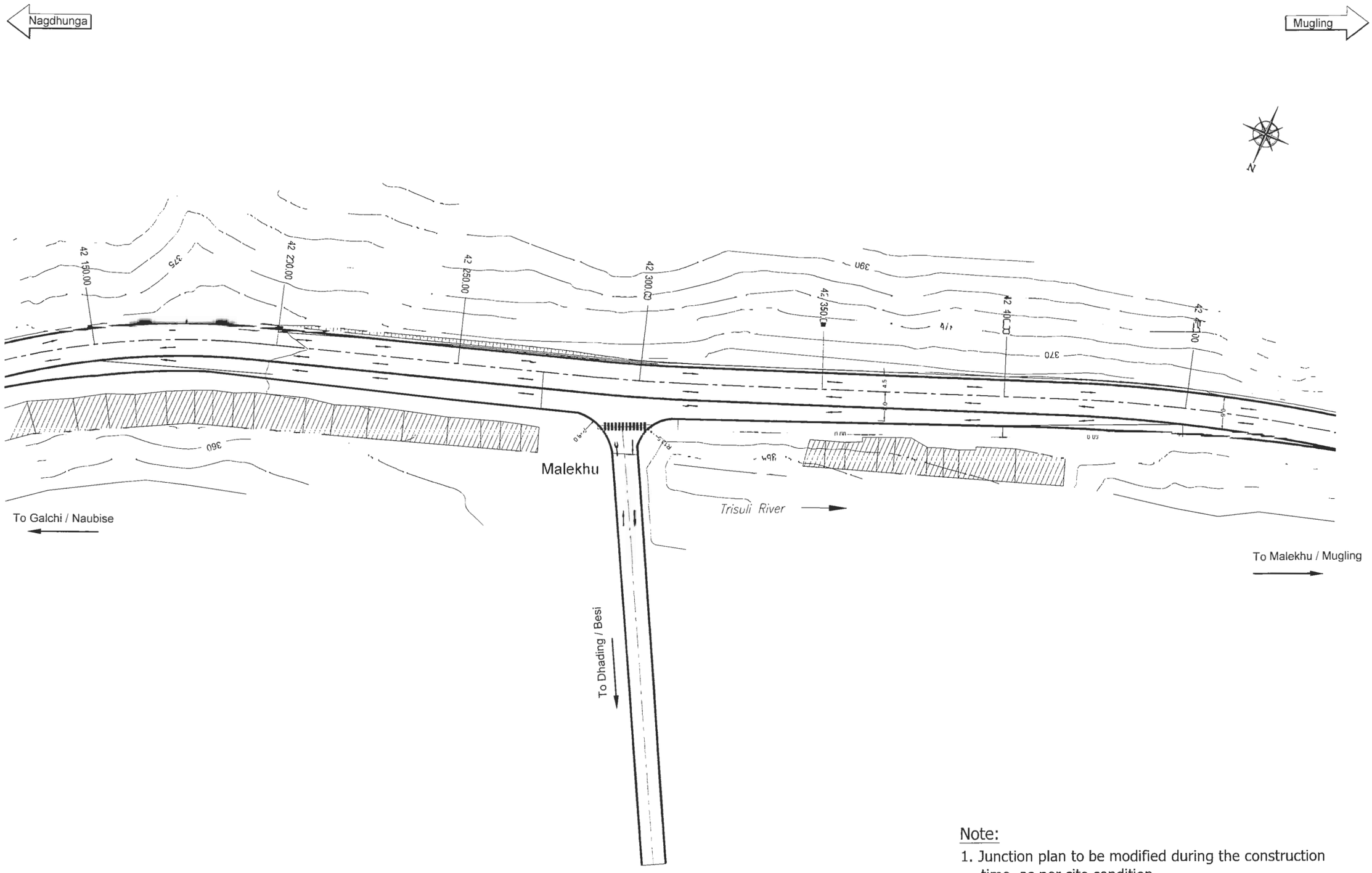


Note:

1. Junction plan to be modified during the construction time, as per site condition.

| EMPLOYER | PROJECT | DESIGN CONSULTANT | | | | | | |
|---|---|---|---|---|---|---|---|---|
| Government of Nepal<br>Ministry of Physical Infrastructure and Transport<br>**Department of Roads**<br>**Development Cooperation Implementation Division** | Nepal India Regional Trade and Transport Project<br>(NIRTTP)<br>(IDA CREDIT No. 5273 - NEP)<br>Detailed Design for Improvement of Kathmandu (Nagdhunga) - Naubise - Mugling Road and Bridges | Intercontinental Consultants & Technocrats Pvt. Ltd.<br>A-8, Green Park, New Delhi - 110016<br>Ph : 4086-3000, Fax 2685-5252<br>In Joint Venture With<br>Soosung Engineering Co. Ltd., South Korea | In Association With<br>Full Bright Consultancy (Pvt.) Ltd.<br>316,Baburam Acharya Sadak<br>Sinamangal, Kathmandu, GPO Box: 4970, Kathmandu, Nepal | Designed By | SB | | **DRAWING NAME:**<br>MALEKH□ DHADING BRIDGE J□NCTION AT Km. 42□300 | **Scale:**<br>0 10 20 30 40 |
| | | | | Checked By | PMS | | | **Date:**<br>August 2019 |
| | | | | Approved By | BNS | | | **Drawing No.:**<br>NNMR-J□NC-005 |

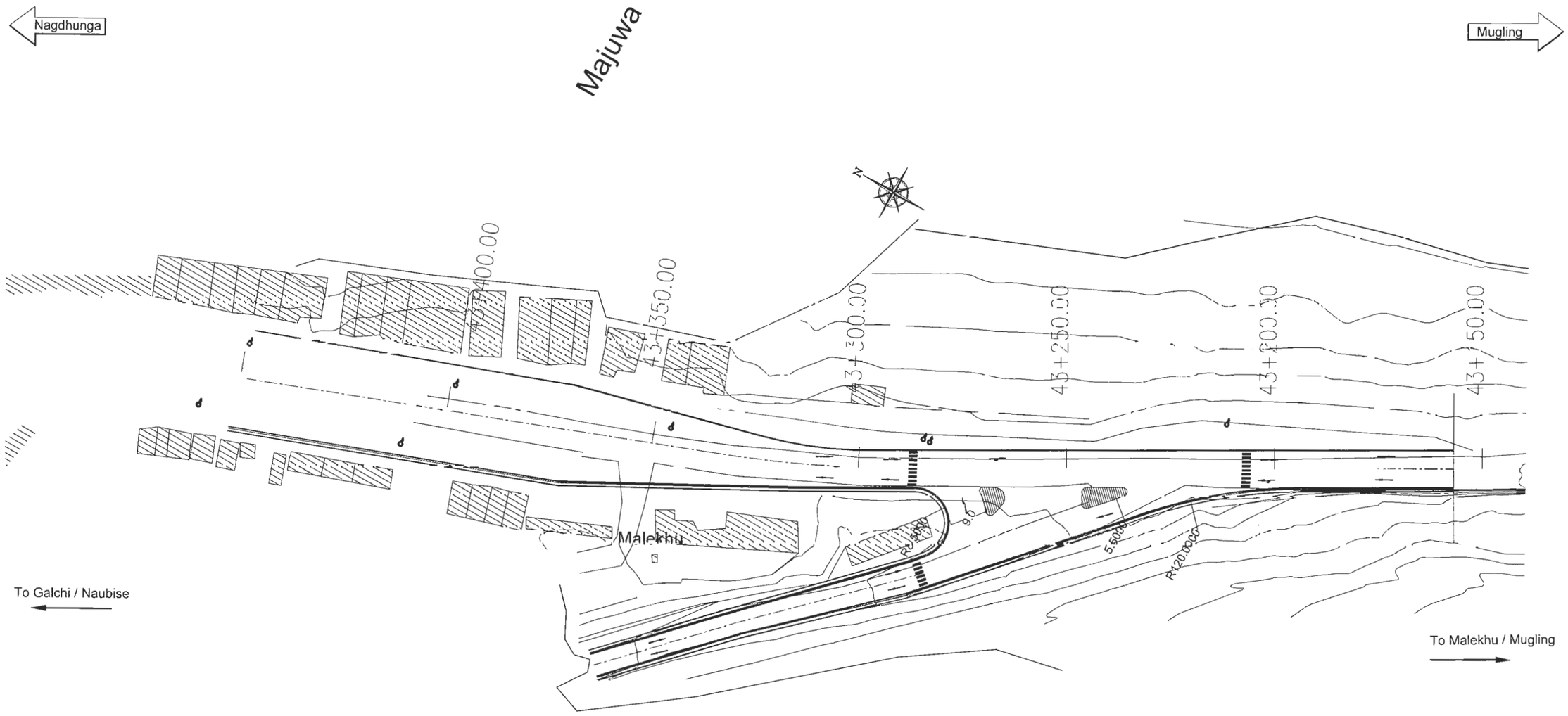


Note:

1. Junction plan to be modified during the construction time, as per site condition.

| EMPLOYER | PROJECT | DESIGN CONSULTANT | | | | | |
|---|---|---|---|---|---|---|---|
| Government of Nepal<br>Ministry of Physical Infrastructure and Transport<br>**Department of Roads**<br>**Development Cooperation Implementation Division** | Nepal India Regional Trade and Transport Project<br>(NIRTTP)<br>(IDA CREDIT No. 5273 - NEP)<br>Detailed Design for Improvement of Kathmandu (Nagdhunga) - Naubise - Mugling Road and Bridges | Intercontinental Consultants & Technocrats Pvt. Ltd.<br>A-8, Green Park, New Delhi - 110016<br>Ph : 4086-3000, Fax 2685-5252<br>In Joint Venture With<br>Soosung Engineering Co. Ltd., South Korea<br>FBC<br>In Association With<br>Full Bright Consultancy (Pvt.) Ltd.<br>316,Baburam Acharya Sadak<br>Sinamangal, Kathmandu, GPO Box: 4970, Kathmandu, Nepal | Designed By | SB | | **DRAWING NAME:**<br>MALEKH□ BHANDARA CHEPANG MARG J□NCTION AT Km. 43□250 | **Scale:**<br>0 10 20 30 40 | **Date:**<br>August 2019 |
| | | | Checked By | PMS | | | | **Drawing No.:** |
| | | | Approved By | BNS | | | | NNMR-J□NC-006 |

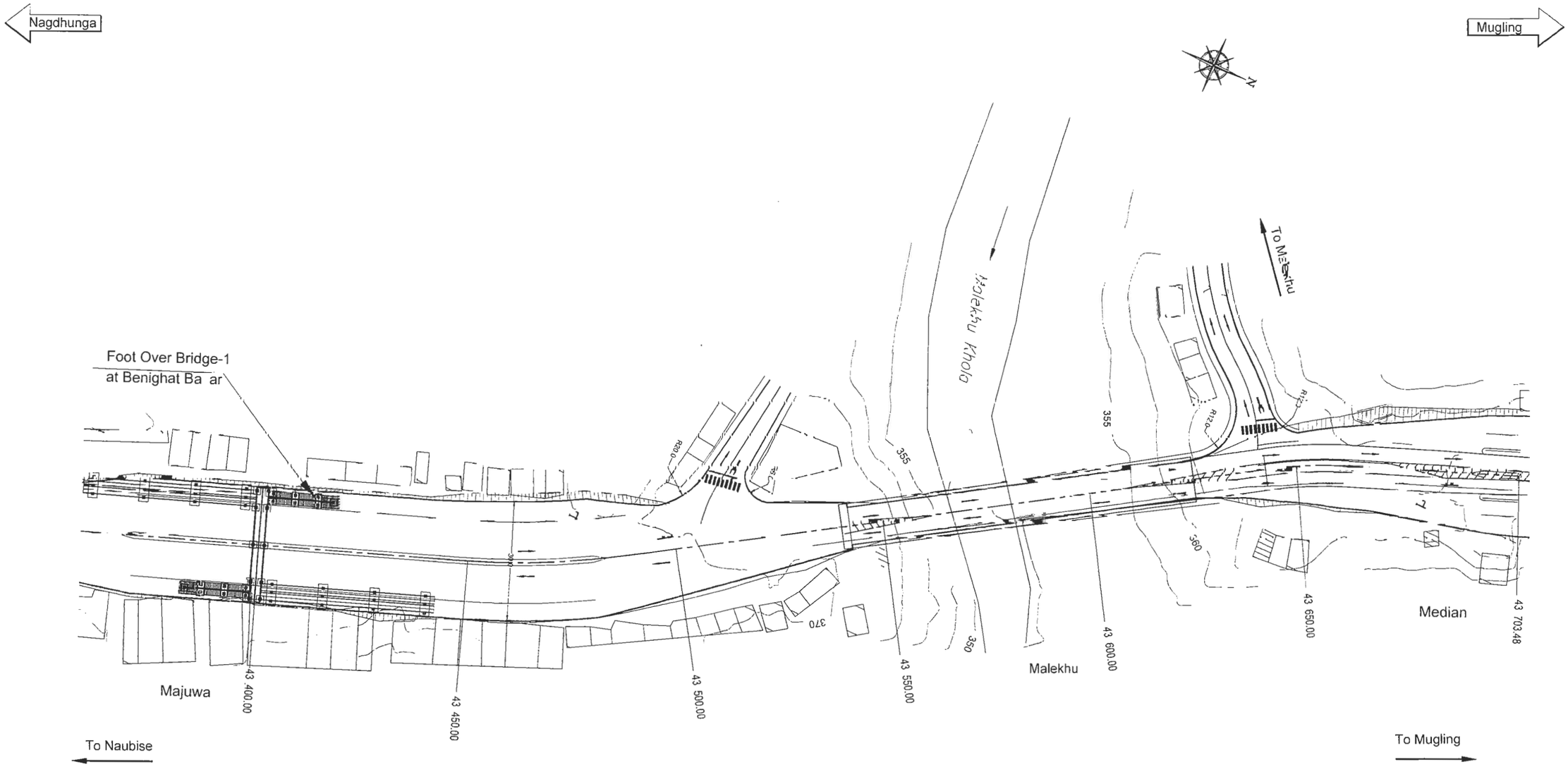


Note:

1. Junction plan to be modified during the construction time, as per site condition.

| EMPLOYER | PROJECT | DESIGN CONSULTANT | | | | | | |
|---|---|---|---|---|---|---|---|---|
| Government of Nepal<br>Ministry of Physical Infrastructure and Transport<br>**Department of Roads**<br>**Development Cooperation Implementation Division** | Nepal India Regional Trade and Transport Project<br>(NIRTTP)<br>(IDA CREDIT No. 5273 - NEP)<br>Detailed Design for Improvement of Kathmandu (Nagdhunga) - Naubise - Mugling Road and Bridges | Intercontinental Consultants & Technocrats Pvt. Ltd.<br>A-8, Green Park, New Delhi - 110016<br>Ph : 4086-3000, Fax 2685-5252<br>In Joint Venture With<br>Soosung Engineering Co. Ltd., South Korea | In Association With<br>Full Bright Consultancy (Pvt.) Ltd.<br>316,Baburam Acharya Sadak<br>Sinamangal, Kathmandu, GPO Box: 4970, Kathmandu, Nepal | Designed By | SB | | **DRAWING NAME:**<br>MALEKH□ BA□AR<br>J□NCTIONS AT Km. 43□500 AND 43□640 | **Scale:**<br>0 10 20 30 40 |
| | | | | Checked By | PMS | | | **Date:**<br>August 2019 |
| | | | | Approved By | BNS | | | **Drawing No.:**<br>NNMR-J□NC-007 |

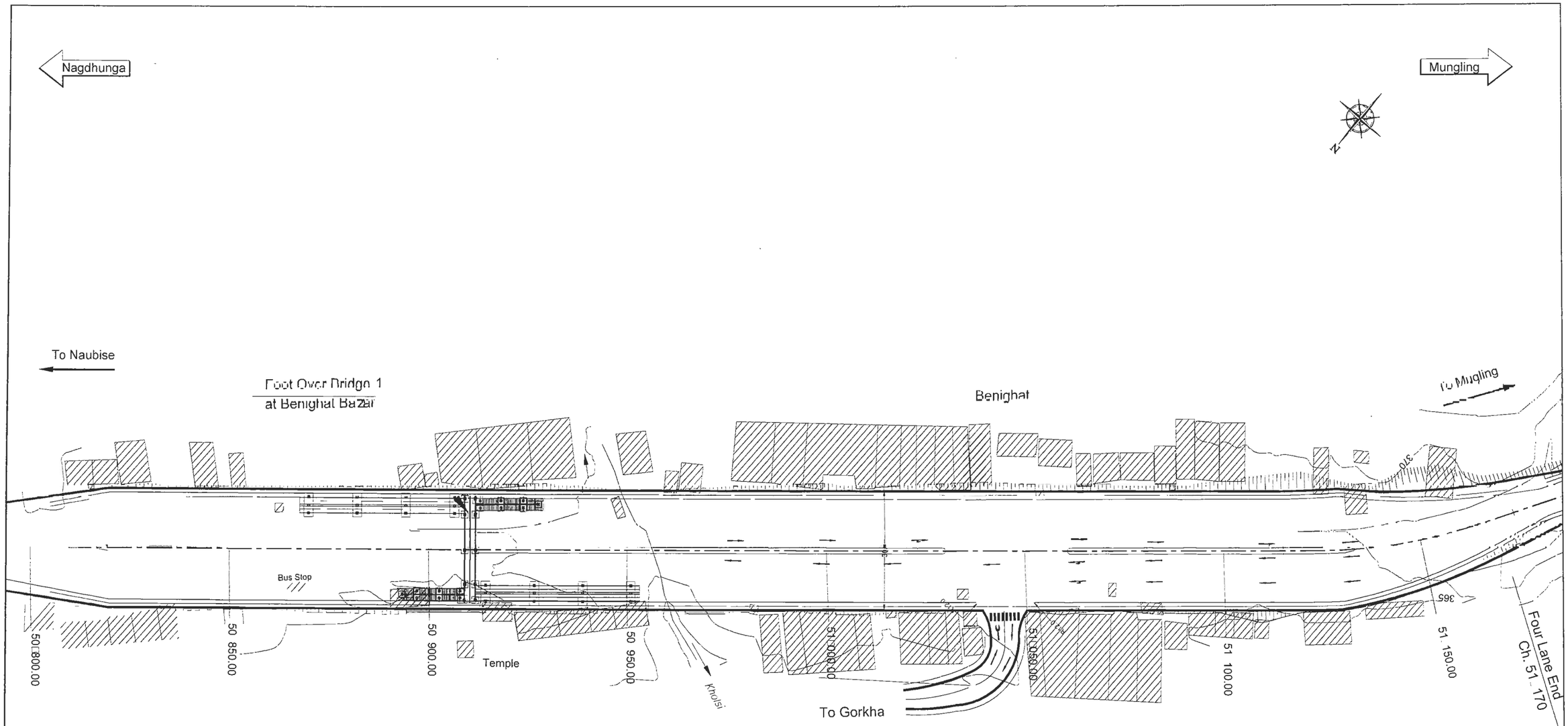


Note:

1. Junction plan to be modified during the construction time, as per site condition.

| EMPLOYER | PROJECT | DESIGN CONSULTANT | | | | | | |
|---|---|---|---|---|---|---|---|---|
| Government of Nepal<br>Ministry of Physical Infrastructure and Transport<br>**Department of Roads**<br>**Development Cooperation Implementation Division** | Nepal India Regional Trade and Transport Project<br>(NIRTTP)<br>(IDA CREDIT No. 5273 - NEP)<br>Detailed Design for Improvement of Kathmandu (Nagdhunga) - Naubise - Mugling Road and Bridges | Intercontinental Consultants & Technocrats Pvt. Ltd.<br>A-8, Green Park, New Delhi - 110016<br>Ph : 4086-3000, Fax 2685-5252<br>In Joint Venture With<br>Soosung Engineering Co. Ltd., South Korea | In Association With<br>Full Bright Consultancy (Pvt.) Ltd.<br>316,Baburam Acharya Sadak<br>Sinamangal, Kathmandu, GPO<br>Box: 4970, Kathmandu, Nepal | Designed By | SB | | **DRAWING NAME:**<br>BENIGHAT WAY TO GORKHA JUNCTION AT Km. 51.050 | **Scale:**<br>0 10 20 30 40 | **Date:**<br>August 2019 |
| | | | | Checked By | PMS | | | | **Drawing No.:**<br>NNMR-JUNC-008 |
| | | | | Approved By | BNS | | | | |

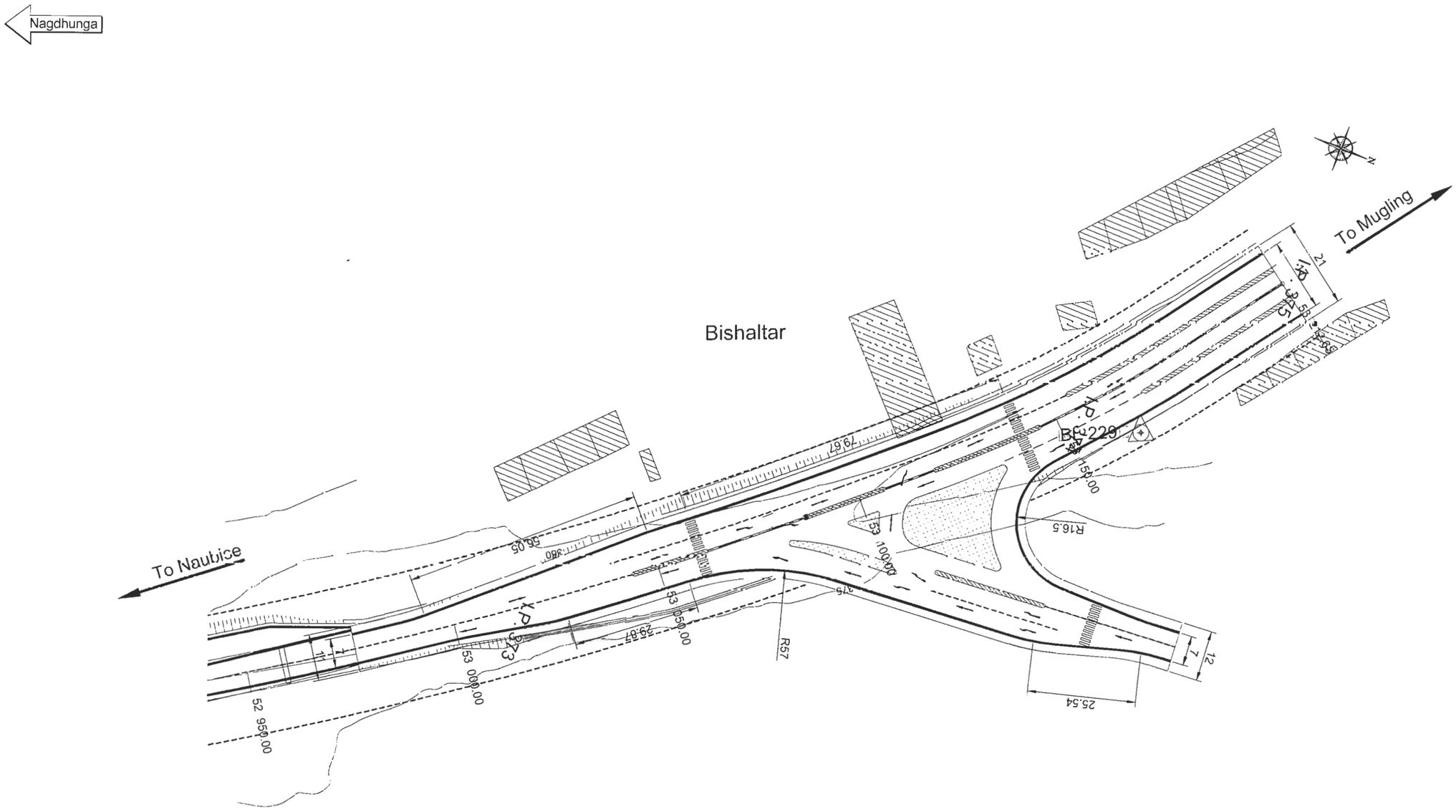


Note:

1. Junction plan to be modified during the construction time, as per site condition.

| EMPLOYER | PROJECT | DESIGN CONSULTANT | | | DRAWING NAME: | Scale: | Date: |
|---|---|---|---|---|---|---|---|
| Government of Nepal<br>Ministry of Physical Infrastructure and Transport<br>**Department of Roads**<br>**Development Cooperation Implementation Division** | Nepal India Regional Trade and Transport Project (NIRTTP)<br>(IDA CREDIT No. 5273 - NEP)<br>Detailed Design of Kathmandu (Nagdhunga) - Naubise - Mungling Road and Bridges | Intercontinental Consultants & Technocrats Pvt.Ltd.<br>A-8, Green Park, New Delhi - 110016<br>Ph : 4086-3000, Fax 2685-5252<br>In Joint Venture With<br>Soosung Engineering Co. Ltd., South Korea | In Association With<br>Full Bright Consultancy (Pvt.) Ltd.<br>316,Baburam Acharya Sadak,<br>Sinamangal, Kathmandu, GPO Box: 4970, Kathmandu, Nepal | Designed By: SB<br>Checked By: PMS<br>Approved By: BNS | BISHALTAR -PHISHLING JUNCTION 1 AT Km.53+100 | 0 10 20 30 40 | August 2019<br>Drawing No.:<br>NNMR-JUNC-009 |

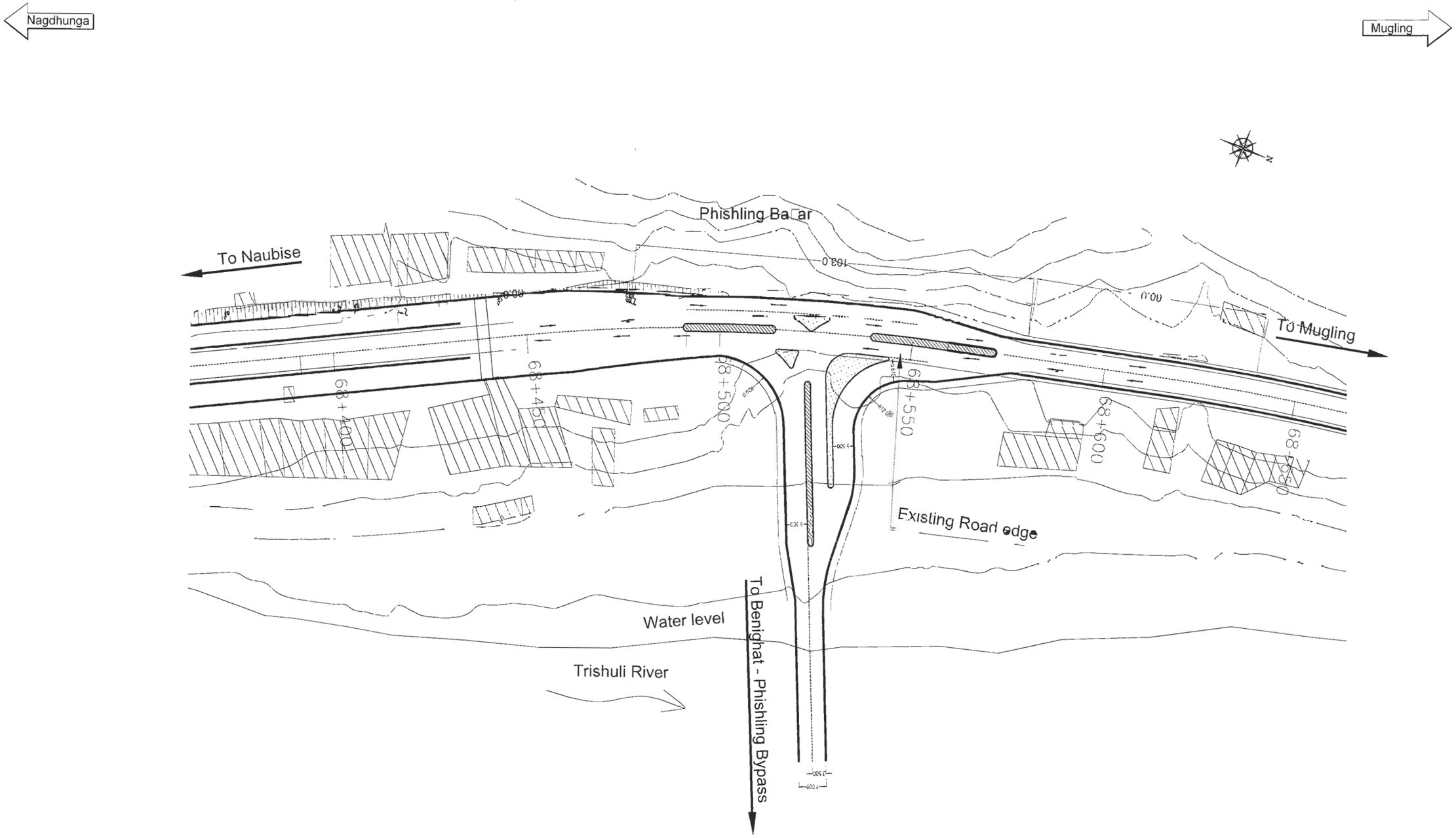


Note:

1. Junction plan to be modified during the construction time, as per site condition.

| EMPLOYER | PROJECT | DESIGN CONSULTANT | | | | | |
|---|---|---|---|---|---|---|---|
| Government of Nepal<br>Ministry of Physical Infrastructure and Transport<br>**Department of Roads**<br>**Development Cooperation Implementation Division** | Nepal India Regional Trade and Transport Project (NIRTTP)<br>(IDA CREDIT No. 5273 - NEP)<br>Detailed Design of Kathmandu (Nagdhunga) -Naubise - Mugling Road and Bridges | Intercontinental Consultants & Technocrats Pvt.Ltd.,<br>A-8, Green Park, New Delhi - 110016<br>Ph : 4086-3000, Fax 2685-5252<br>In Joint Venture With<br>Soosung Engineering Co. Ltd., South Korea<br>FBC<br>In Association With<br>Full Bright Consultancy (Pvt.) Ltd.<br>316,Baburam Acharya Sadak,<br>Sinamangal, Kathmandu, GPO<br>Box: 4970, Kathmandu, Nepal | Designed By | SB | DRAWING NAME:<br>BISHALTAR -PHISHLING JUNCTION 2 AT Km.68+525 | Scale: | Date:<br>August 2019 |
| | | | Checked By | PMS | | | Drawing No.: |
| | | | Approved By | BNS | | | NNMR-JUNC-010 |

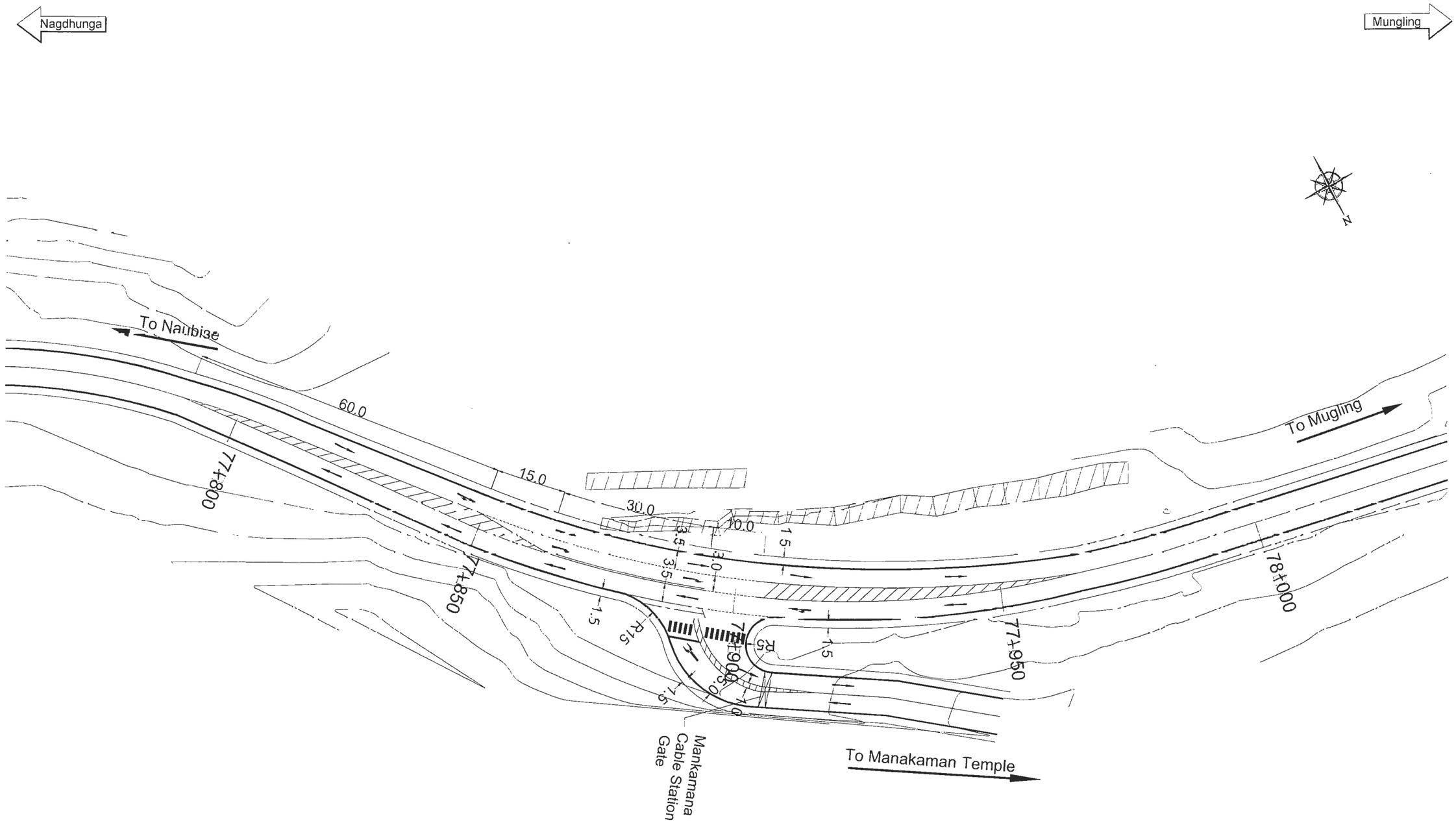


Note:

1. Junction plan to be modified during the construction time, as per site condition.

| EMPLOYER | PROJECT | DESIGN CONSULTANT | | | | | |
|---|---|---|---|---|---|---|---|
| Government of Nepal<br>Ministry of Physical Infrastructure and Transport<br>**Department of Roads**<br>**Development Cooperation Implementation Division** | Nepal India Regional Trade and Transport Project (NIRTTP)<br>(IDA CREDIT No. 5273 - NEP)<br>Detailed Design of Kathmandu (Nagdhunga) -Naubise - Mugling Road and Bridges | Intercontinental Consultants & Technocrats Pvt.Ltd.<br>A-8, Green Park, New Delhi - 110016<br>Ph : 4086-3000, Fax 2685-5252<br>In Joint Venture With<br>Soosung Engineering Co. Ltd., South Korea<br>In Association With<br>Full Bright Consultancy (Pvt.) Ltd.<br>316,Baburam Acharya Sadak,<br>Sinamangal, Kathmandu, GPO Box 4970, Kathmandu, Nepal | Designed By | SB | DRAWING NAME: | Scale: | Date: August 2019 |
| | | | Checked By | PMS | MANAKAMANA TEMPLE GATE JUNCTION AT Km.79+900 | 0 10 20 30 40 | Drawing No.: |
| | | | Approved By | BNS | | | NNMR-JUNC-011 |

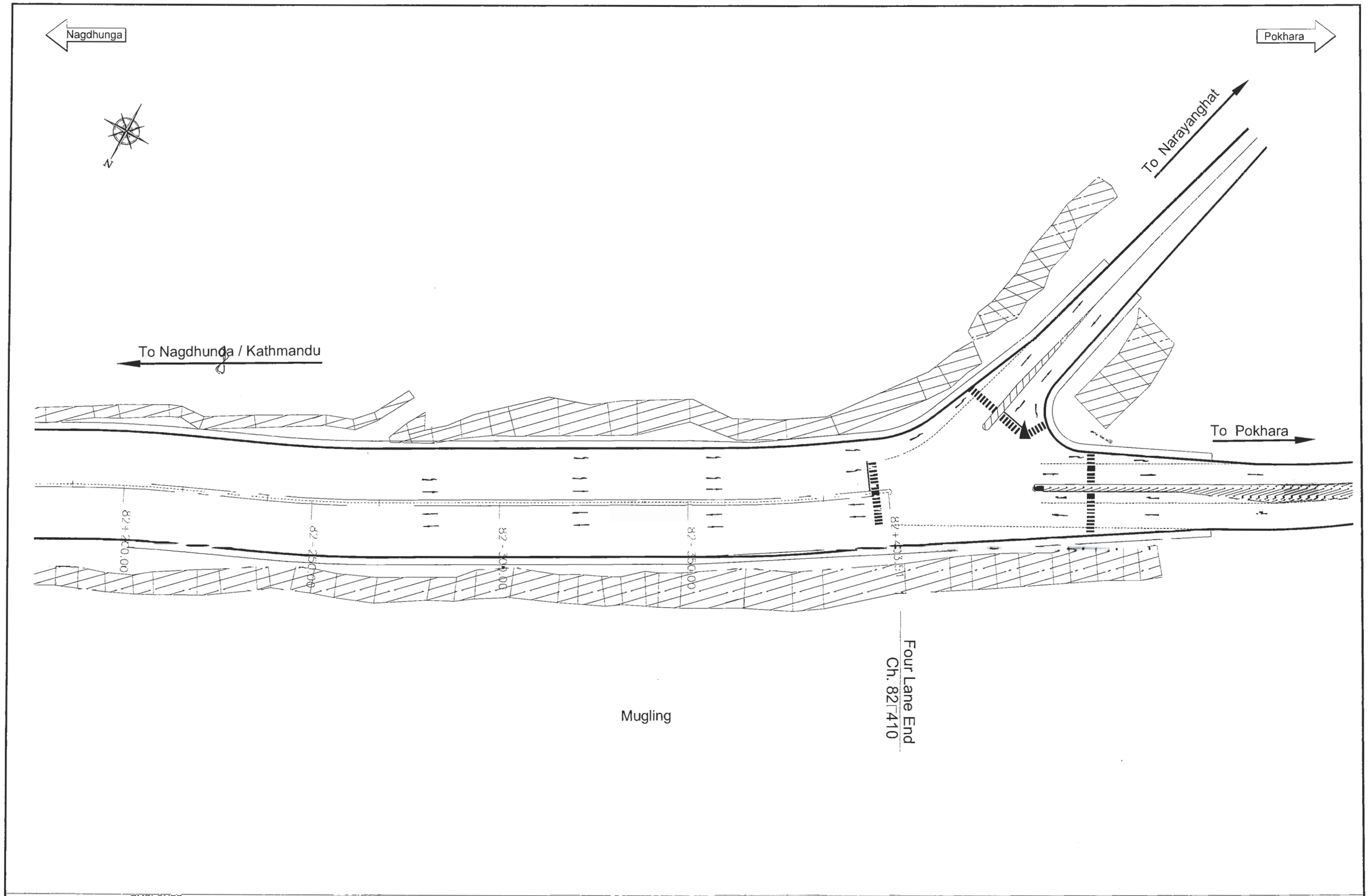


| EMPLOYER | PROJECT | DESIGN CONS□LTANT | | | | | |
|---|---|---|---|---|---|---|---|
| Government of Nepal<br>Ministry of Physical Infrastructure and Transport<br>**Department of Roads**<br>**Development Cooperation Implementation Division** | Nepal India Regional Trade and Transport Project (NIRTTP)<br>(IDA CREDIT No. 5273 - NEP)<br>Detailed Design of Kathmandu (Nagdhunga) -Naubise - Mugling Road and Bridges | Intercontinental Consultants & Technocrats Pvt.Ltd.<br>A-8, Green Park, New Delhi - 110016<br>Ph : 4086-3000, Fax 2685-5252<br>In Joint Venture With<br>Soosung Engineering Co. Ltd., South Korea | In Association With<br>Full Bright Consultancy (Pvt.) Ltd.<br>316,Baburam Acharya Sadak,<br>Sinamangal, Kathmandu, GPO Box 4970, Kathmandu, Nepal | Designed By | SB | DRAWING NAME: | Scale: |
| | | | | Checked By | PMS | M□GLING BA□AAR J□NCTION AT Km.82□405 | 0 10 20 30 40 |
| | | | | Approved By | BNS | | |

Date: August 2019

Drawing No.: NNMR-J□NC-012

# DESIGN OF TYPICAL JUNCTION WITH BRIDGE APPROACH

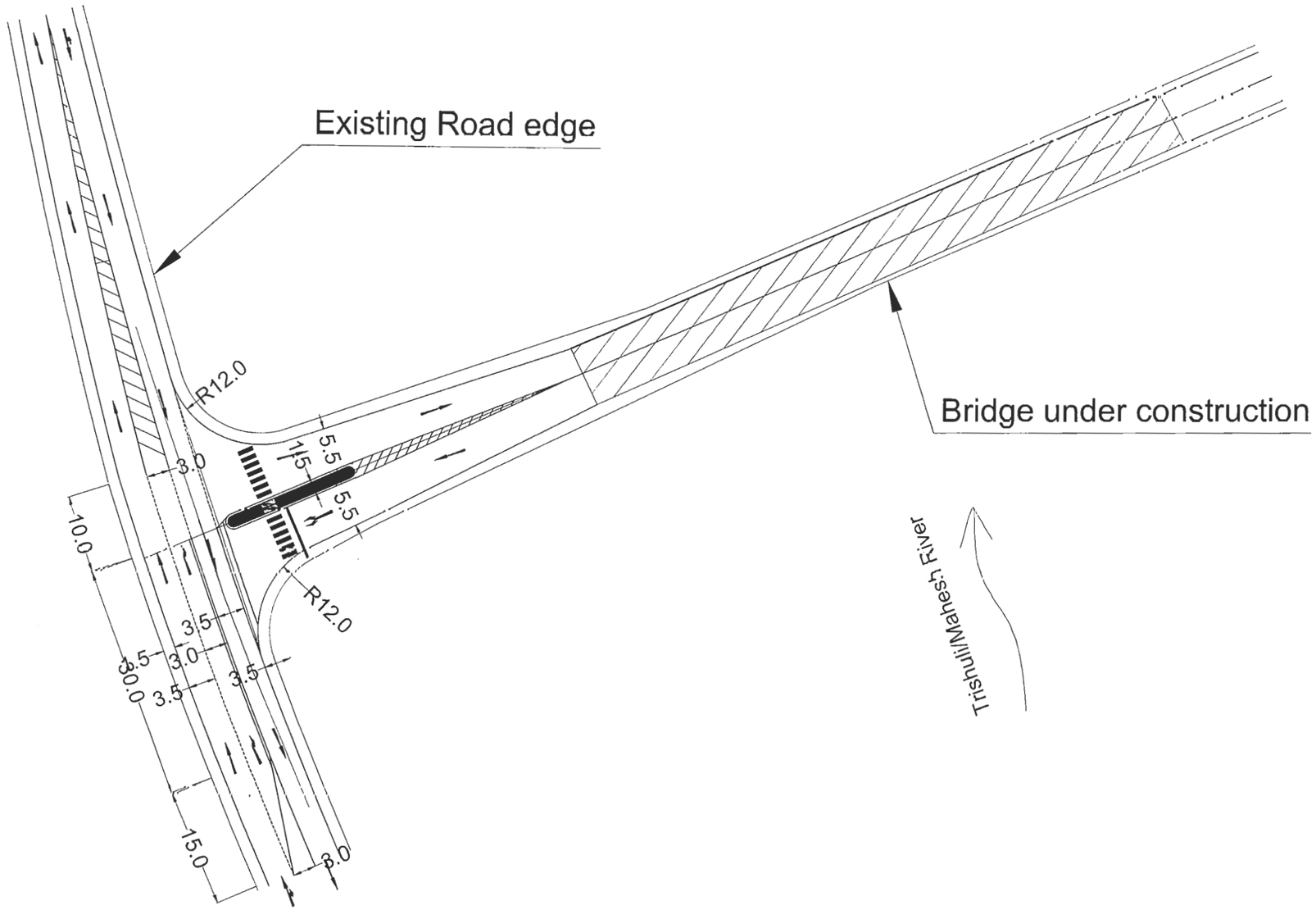


Note:

1. Junction plan to be modified during the construction time, as per site condition.

| EMPLOYER | PROJECT | DESIGN CONSULTANT | | | | | | |
|---|---|---|---|---|---|---|---|---|
| Government of Nepal<br>Ministry of Physical Infrastructure and Transport<br>**Department of Roads**<br>**Development Cooperation Implementation Division** | Nepal India Regional Trade and Transport Project (NIRTTP)<br>(IDA CREDIT No. 5273 - NEP)<br>Detailed Design of Kathmandu (Nagdhunga) -Naubise - Mugling Road and Bridges | Intercontinental Consultants & Technocrats Pvt.Ltd,<br>A-8, Green Park, New Delhi - 110016<br>Ph : 4086-3000, Fax 2685-5252<br>In Joint Venture With<br>Soosung Engineering Co. Ltd., South-Korea | In Association With<br>Full Bright Consultancy (Pvt.) Ltd.<br>316,Baburam Acharya Sadak,<br>Sinamangal, Kathmandu, GPO Box 4970, Kathmandu, Nepal | Designed By | SB | DRAWING NAME: | Scale: | Date: August 2019 |
| | | | | Checked By | PMS | TYPICAL BRIDGE JUNCTION | 0 2.5 5.0 7.5 10.0 | Drawing No.: |
| | | | | Approved By | BNS | | | NNMR-TYP-J NC-13 |

# DESIGN OF TYPICAL Y-JUNCTION (RURAL ROAD)

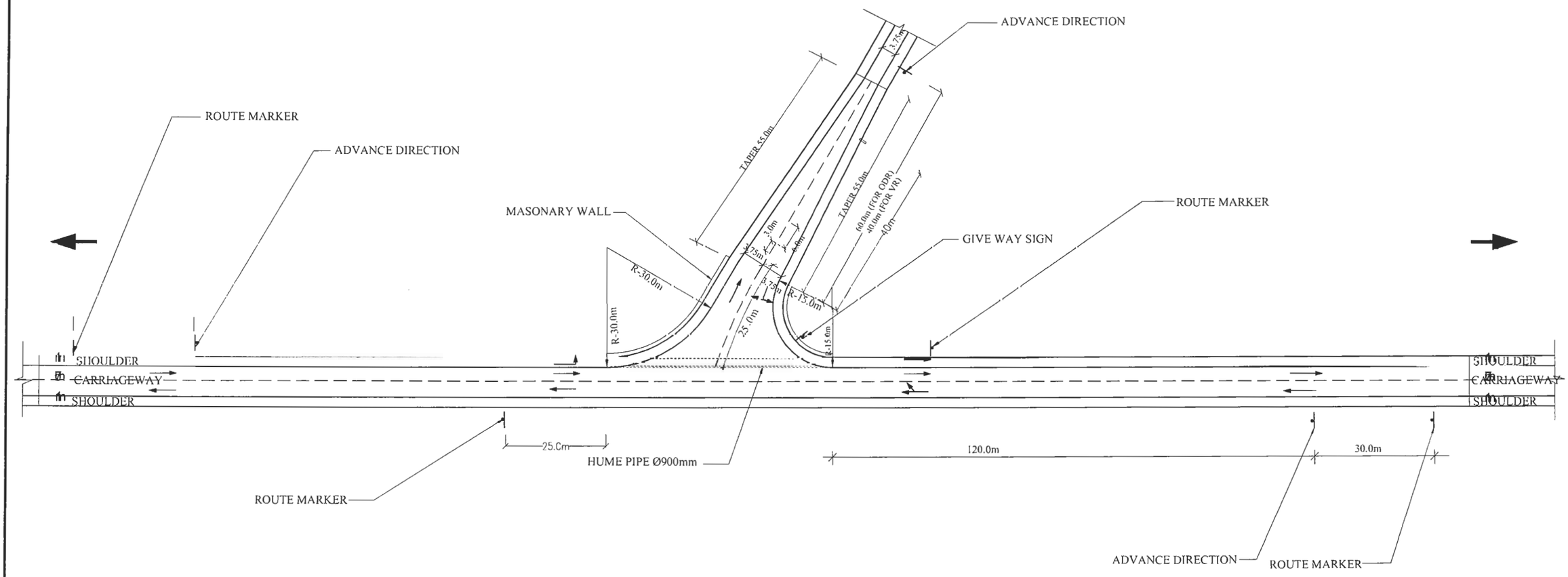


Note:

1. Junction plan to be modified during the construction time, as per site condition.

| EMPLOYER | PROJECT | DESIGN CONSULTANT | | | | | |
|---|---|---|---|---|---|---|---|
| Government of Nepal<br>Ministry of Physical Infrastructure and Transport<br>**Department of Roads**<br>**Development Cooperation Implementation Division** | Nepal India Regional Trade and Transport Project (NIRTTP)<br>(IDA CREDIT No. 5273 - NEP)<br>Detailed Design of Kathmandu (Nagdhunga) -Naubise - Mugling Road and Bridges | Intercontinental Consultants & Technocrats Pvt.Ltd.<br>A-8, Green Park, New Delhi - 110016<br>Ph : 4086-3000, Fax 2685-5252<br>In Joint Venture With<br>Soosung Engineering Co. Ltd., South Korea<br>FBC<br>In Association With<br>Full Bright Consultancy (Pvt.) Ltd.<br>316,Baburam Acharya Sadak,<br>Sinamangal, Kathmandu, GPO<br>Box: 4970. Kathmandu, Nepal | Designed By | SB | DRAWING NAME: | Scale: | Date: August 2019 |
| | | | Checked By | PMS | TYPICAL MINOR JUNCTION | 0 5 10 15 20 | Drawing No.: |
| | | | Approved By | BNS | | | NNMR-TYP-J NC-14 |

# CURVE DETAILS, ROAD MARKINGS, ROAD SIGNS, KM POST, GUARD POST AND SAFETY BARRIER

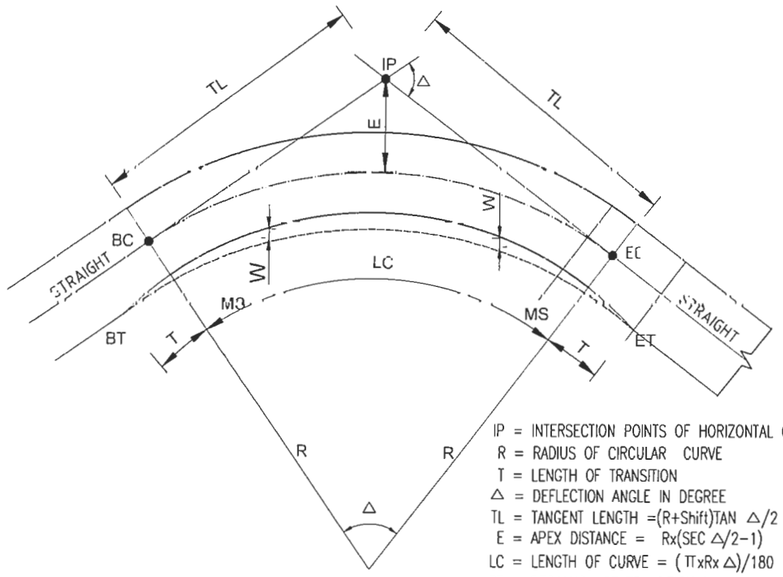


IP = INTERSECTION POINTS OF HORIZONTAL CURVES
R = RADIUS OF CIRCULAR CURVE
T = LENGTH OF TRANSITION
Δ = DEFLECTION ANGLE IN DEGREE
TL = TANGENT LENGTH =(R+Shift)TAN Δ/2
E = APEX DISTANCE = Rx(SEC Δ/2−1)
LC = LENGTH OF CURVE = (πxRx Δ)/180
BT = BEGINING OF TRANSITION (JUNCTION OF TRANSITION START)
ET = END OF TRANSITION CURVE (JUNCTION OF TRANSITION END)
$e_{max}$ = LIMIT OF MAXIMUM SUPER ELEVATION
BC&EC = BEGINING AND END OF THE CURVE
W = EXTRA WIDENING
NC = NO CURVE SECTION
MS = MAXIMUM SUPER ELEVATION

## ELEMENTS OF HORIZONTAL CURVE

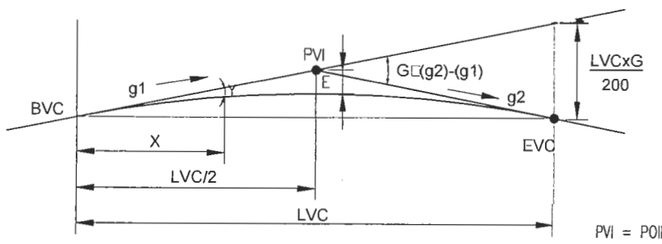


PVI = POINT OF VERTICAL INTERSECTIONS
LVC = LENGTH OF VERTICAL CURVE
BVC = BEGINING OF VERTICAL CURVE
EVC = END OF VERTICAL CURVE
g1&g2 = GRADES IN %
G = (g2)−(g1)
Y = $GxX^2/(200xLVC)$
E = GxLVC/800
Vertical Curve = 20m Minimum in Length.

## ELEMENTS OF VERTICAL CURVE

| IP.No | CO-ORDINATES(m) | | WCB | DIST | DEF. ANG | TAN. LEN. | SIMPLE CURVE DATA | | | CHAINAGE | | | | | |
|---|---|---|---|---|---|---|---|---|---|---|---|---|---|---|---|
| | EASTING | NORTHING | (D-M-S) | (m) | (D-M-S) | (m) | R (m) | E (m) | LC (m) | BC. OF SPIRAL CURVE | BC. OF SIMPLE CURVE | MC | EC OF SIMPLE CURVE | EC OF SPIRAL CURVE | IP |
| 32 | 545424.062 | 3073130.000 | 311-22-19 | 93.247 | 07-06-16 | 18.624 | 300.000 | 0.578 | 37.200 | 11+892.56 | 11+892.56 | 11+911.16 | 11+929.76 | 11+929.76 | 11+911.18 |
| 33 | 545383.188 | 3073166.000 | 299-05-57 | 54.467 | 12-16-21 | 10.751 | 100.000 | 0.576 | 21.420 | 11+954.85 | 11+954.85 | 11+965.56 | 11+976.27 | 11+976.27 | 11+965.60 |
| 34 | 545193.188 | 3073271.750 | 301-23-58 | 217.447 | 02-17-51 | 9.024 | 450.000 | 0.090 | 18.045 | 12+173.94 | 12+173.94 | 12+182.96 | 12+191.98 | 12+191.98 | 12+182.96 |
| 35 | 545027.312 | 3073373.000 | 300-15-40 | 194.336 | 01-08-24 | 7.960 | 800.000 | 0.040 | 15.920 | 12+369.33 | 12+369.33 | 12+377.29 | 12+385.25 | 12+385.25 | 12+377.29 |
| 35-1 | 544887.625 | 3073454.500 | 293-34-15 | 161.724 | 06-41-31 | 11.693 | 200.000 | 0.342 | 23.360 | 12+527.32 | 12+527.32 | 12+539.00 | 12+550.68 | 12+550.68 | 12+539.01 |
| 36-1 | 544829.750 | 3073479.750 | 264-33-38 | 63.143 | 29-00-31 | 32.338 | 125.000 | 4.115 | 63.288 | 12+569.79 | 12+569.79 | 12+601.44 | 12+633.08 | 12+633.08 | 12+602.13 |

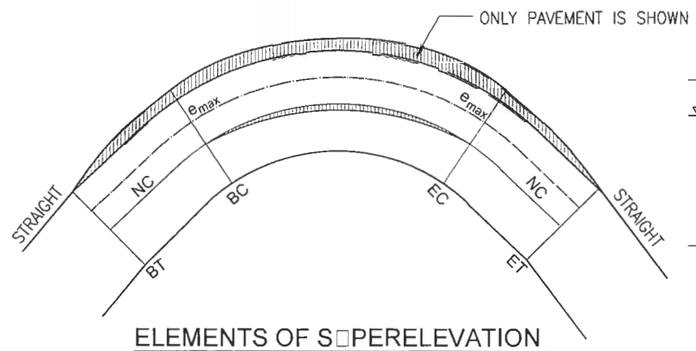


## ELEMENTS OF SUPERELEVATION

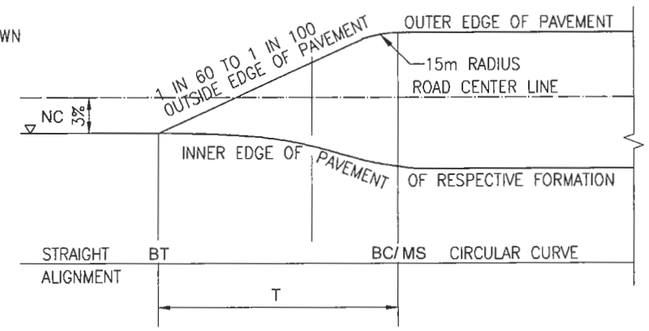


## ELEVATION OF SUPERELEVATION

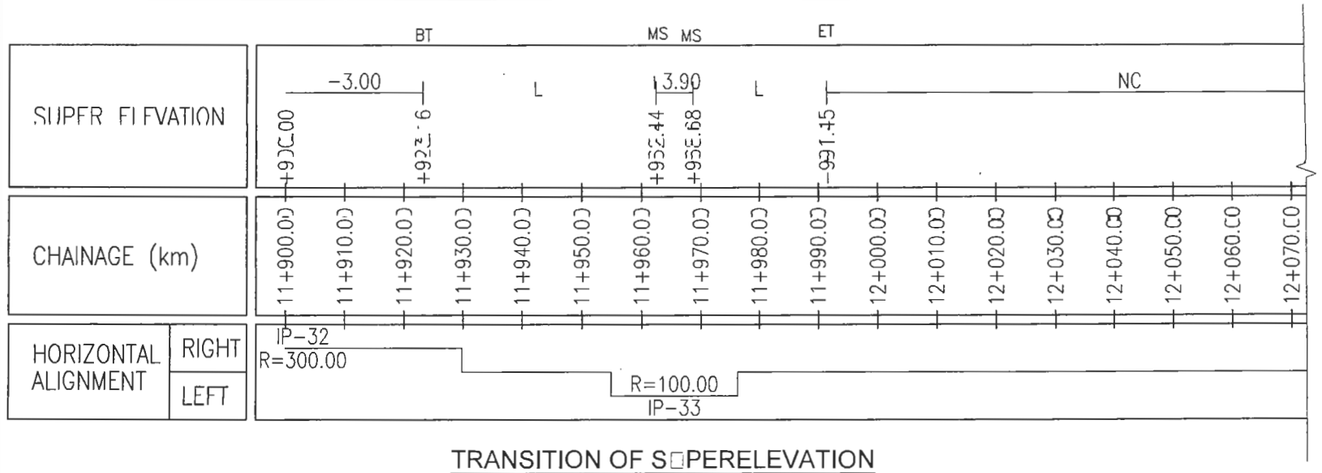


## TRANSITION OF SUPERELEVATION

| EMPLOYER | PROJECT | DESIGN CONSULTANT | | | | | | |
|---|---|---|---|---|---|---|---|---|
| Government of Nepal<br>Ministry of Physical Infrastructure and Transport<br>**Department of Roads**<br>**Development Cooperation Implementation Division** | Nepal India Regional Trade and Transport Project (NIRTTP)<br>(IDA CREDIT No. 5273 - NEP)<br>Detailed Design for Improvement of Kathmandu (Nagdhunga) - Naubise - Mugling Road and Bridges | Intercontinental Consultants & Technocrats Pvt. Ltd.<br>A-8, Green Park, New Delhi - 110016<br>Ph : 4086-3000, Fax 2685-5252<br>In Joint Venture With<br>Soosung Engineering Co. Ltd., South Korea | In Association With<br>Full Bright Consultancy (Pvt.) Ltd.<br>316,Baburam Acharya Sadak<br>Sinamangal, Kathmandu, GPO Box: 4970, Kathmandu, Nepal | Designed By | SB | | **DRAWING NAME:**<br>CURVE DETAILS | **Scale:** | **Date:**<br>August 2019 |
| | | | | Checked By | PMS | | | | **Drawing No.:**<br>NNMR-TYP 03-01 |
| | | | | Approved By | BNS | | | | |

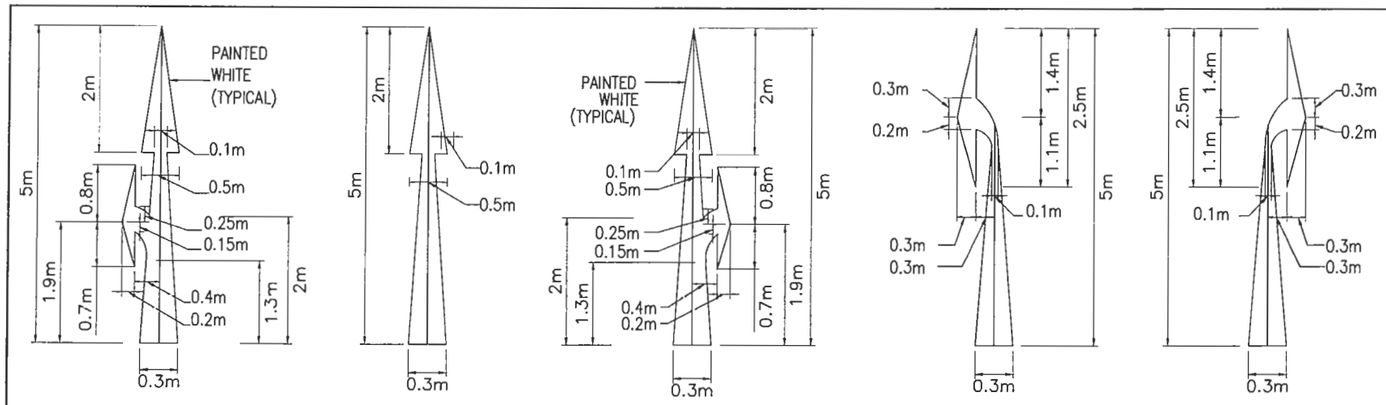


DIRECTIONAL ARROWS

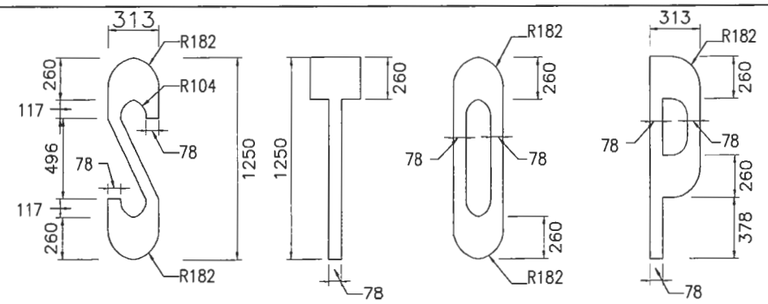


SIZE OF LETTERS

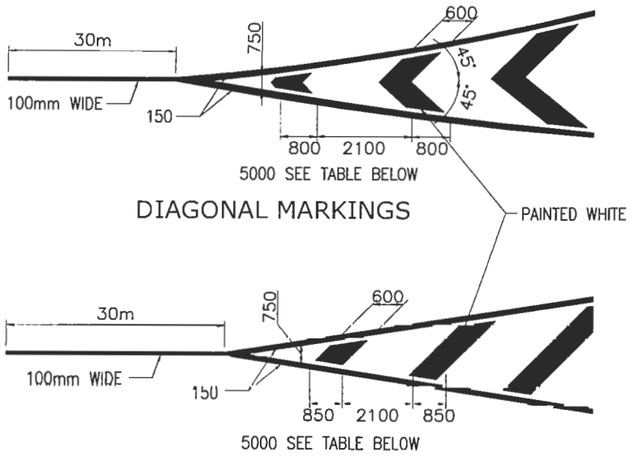


DIAGONAL MARKINGS

CHEVRON MARKINGS

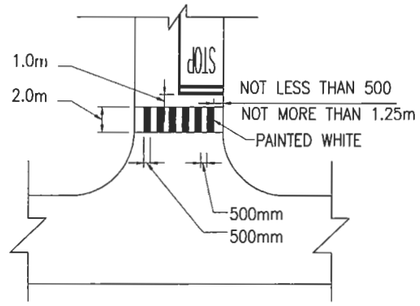


PEDESTRIAN CROSSING

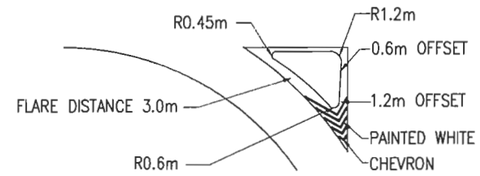


CHANELISING ISLAND

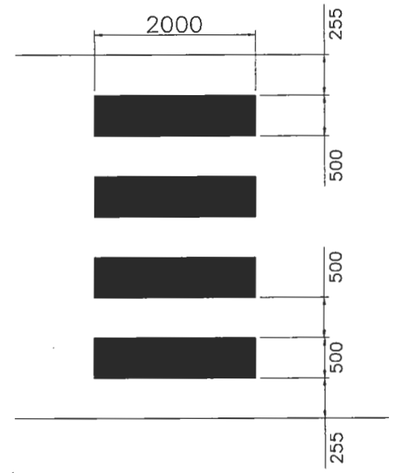


PEDESTRIAN CROSSING

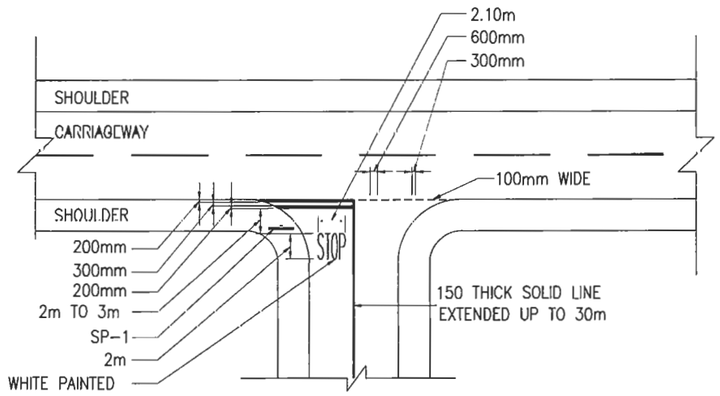


STOP LINE

| TABLE : SPACING BETWEEN DIAGONALS/CHEVRONS | | |
|---|---|---|
| TOTAL LENGTH OF MARKING (m) | CLEAR SPACING BETWEEN DIAGONALS OR CHEVRONS (mm) | |
| | SPEED (<75 km/h) | SPEED (>75 km/h) |
| <6 | 2100 | – |
| 6 TO 22 | 3500 | – |
| >22 | 5000 | – |
| <10 | – | 4000 |
| >10 | – | 6000 |

## NOTE:

1. ALL LENGTHS AND SPACINGS IN THE TABLE ARE MEAS□RED PARALLEL TO ROAD CENTRE LANE.
2. FIRST DIAGONAL OR CHEVRON IS TO BE SO LOCATED THAT ITS LENGTH IS ATLEAST E□□AL TO ITS WIDTH.
3. WIDTH OF ALL DIAGONALS/CHEVRONS MEAS□RED AT RIGHT ANGLES TO THE DIAGONALS OR CHEVRONS IS 600mm.
4. ROAD MARKING SHO□LD BE DONE WITH THERMOPLASTIC PAINT.

| EMPLOYER | PROJECT | DESIGN CONSULTANT | | | | | | |
|---|---|---|---|---|---|---|---|---|
| Government of Nepal<br>Ministry of Physical Infrastructure and Transport<br>**Department of Roads**<br>**Development Cooperation Implementation Division** | Nepal India Regional Trade and Transport Project (NIRTTP)<br>(IDA CREDIT No. 5273 - NEP)<br>Detailed Design for Improvement of Kathmandu (Nagdhunga) - Naubise - Mugling Road and Bridges | Intercontinental Consultants & Technocrats Pvt. Ltd.<br>A-8, Green Park, New Delhi - 110016<br>Ph : 4086-3000, Fax 2685-5252<br>In Joint Venture With<br>Soosung Engineering Co. Ltd., South Korea | In Association With<br>Full Bright Consultancy (Pvt.) Ltd.<br>316,Baburam Acharya Sadak<br>Sinamangal, Kathmandu, GPO Box: 4970, Kathmandu, Nepal | Designed By | SB | | **DRAWING NAME:**<br>TYPICAL ROAD MARKING DETAILS | **Scale:** | **Date:**<br>August 2019 |
| | | | | Checked By | PMS | | | | **Drawing No.:**<br>NNMR-TYP 03-02 |
| | | | | Approved By | BNS | | | | |

# TRAFFIC SIGNS

## REGULATORY SIGNS

Stop and give way
Give way to traffic on major road or roundabout
No entry for vehicles
No motor vehicles
No trucks
No two wheelers
No pedestrians
No animal-drawn vehicles
No vehicle over height shown
No vehicle over width shown
No vehicle over length shown
No vehicle over maximum gross weight shown
Axle weight limit
No parking
No stopping
No overtaking
No right turn
No left turn
No U-turns
No use of horn
Maximum speed
End of speed restriction
Temporary "Stop" sign
Temporary "Go" sign
No passing without stopping
Restriction ends
Turn left (right if symbol is reversed)
Keep left (right if symbol is reversed)
Ahead only
Turn left ahead (right if symbol is reversed)
Small roundabout (give way to vehicles from the right)
Pass either side
One-way traffic

## SUPPLEMENTARY PLATES

Examples:

२ कि.मी.को लागि
For 2 km

२०० मी.
200m
Distance to hazard

२ कि.मी.को लागि
For 2 km
Distance over which hazard extends

विद्यालय
School

बसहरु बाहेक
Except buses

बाढीग्रस्त
Flooding

एकपंक्ति सवारी
Single track road

## WARNING SIGNS

Crossroads
Major road ahead (crossroads)
Side road right (left if symbol is reversed)
Staggered junction (symbol may be reversed)
T-junction
Y-junction
Traffic merges from left
Traffic merges from right
Roundabout
Bend to right (left if symbol is reversed)
Hairpin bend to right (left if symbol is reversed)
Double bend first to left (right if symbol is reversed)
Sharp bend to the left (right if chevrons reversed)
Road narrows on both sides
Road narrows on right (left if symbol is reversed)
Dual-carriageway ends
Traffic signals
Steep hill downwards
Steep hill upwards
Height limit ahead
Two-way traffic straight ahead
Two-way traffic crosses one-way road
Pedestrian crossing
Pedestrians in road ahead
Children
Cattle
Wild animals
River bank
Uneven road
Slippery road
Road hump
Low flying aircraft
Falling rocks
Dangerous dip
Narrow bridge
Other danger
Checkpoint
Road works
Loose chippings
Railway level crossing without gate or barrier
Railway level crossing with gate or barrier
अगाडि डाइभर्सन
DIVERSION AHEAD
Temporary diversion ahead
डाइभर्सन
DIVERSION
Direction of temporary diversion
Dangerous obstruction
T-junction (turn right or left only)
Sharp bend (temporary diversion)
Dangerous obstruction

## DIRECTION SIGNS

Signs on national highways - green backgrounds

राष्ट्र दूहवी
दमक
इनरुवा
रा१
रा१
On approaches to junctions

राष्ट्र ०४
पृथ्वी राजमार्ग
(नारायणघाट
पोखरा
Route confirmation sign - after junctions

रा४ डुम्रे
पोखरा
नारायणघाट
रा१
On approaches to junctions - alternative style

नारायणघाट
रा१
At the junction

Temporary diversion signs - yellow background

पोखरा
Pokhara

Signs on feeder roads and town roads - black borders

नगरकोट
सरन्द F28
Nagarkot
At the junction

सिंह दरबार
Singh Durbar
प्रसुति गृह
Hospital
त्रिपुरेश्वर
Tripureswor
On approaches to junctions

## ROAD MARKINGS

### Across the carriageway

Stop line at STOP sign or traffic signals
Give way to traffic on major road or roundabout

### Pedestrian crossings

Standard type
At Traffic lights
Drivers must give way to pedestrians on the crossing
Pedestrians can cross when the traffic is stopped
Traffic island - Do not enter painted area except in emergency

### Along the carriageway

Lane line
Barrier line - Do not cross
Hazard warning line

### Along the edge of the carriageway

Edge of carriageway
No parking

## INFORMATION SIGNS

No through road
Pedestrian crossing
Parking place
Overtaking section
2 km
Filling station
Breakdown service
Telephone
Overnight accommodation
First-aid post
Hospital
Refreshments
Restaurant
Picnic site
Recommended route for pedestrians and cyclists
Recommended route for pedestrians
Recommended route for cyclists
Bus stop
टयाक्सी
Taxi park
एक तर्फो
One-way street
दुहवी
DUHABI
Place identification sign (only in Earthen area)
दुहवी
DUHABI
Exit from built-up area

## TRAFFIC LIGHT SIGNALS

### For control of vehicles

RED means STOP. Wait behind the stop line on the carriageway
GREEN means you may go on if the way is clear
AMBER means stop at the stop line. You may only go on if you are too close to the stop line to be able to stop safely

The signal sequence is:
RED
GREEN
AMBER
then back to RED

When the GREEN ARROW is lit you may go, but only in the direction shown by the arrow. You can go this whatever other lights may be showing
When the AMBER ARROW is lit you may go, but only in the direction shown by the arrow. Look out for other vehicles and give way to them.
When the RED ARROW is lit you must not go in the direction of the arrow

### For controlling pedestrian crossing movements

Wait
Cross with care
Do not start to cross
Alternative arrangement of light signals

Traffic Engineering and Safety Unit, Department of Roads, 1997

| EMPLOYER | PROJECT | DESIGN CONSULTANT | | | | | |
|---|---|---|---|---|---|---|---|
| Government of Nepal<br>Ministry of Physical Infrastructure and Transport<br>**Department of Roads**<br>**Development Cooperation Implementation Division** | Nepal India Regional Trade and Transport Project (NIRTTP)<br>(IDA CREDIT No. 5273 - NEP)<br>Detailed Design for Improvement of Kathmandu (Nagdhunga) - Naubise - Mugling Road and Bridges | Intercontinental Consultants & Technocrats Pvt. Ltd.<br>A-8, Green Park, New Delhi - 110016<br>Ph : 4086-3000, Fax 2685-5252<br>In Joint Venture With<br>Soosung Engineering Co. Ltd., South Korea | In Association With<br>Full Bright Consultancy (Pvt.) Ltd.<br>316,Baburam Acharya Sadak<br>Sinamangal, Kathmandu, GPO Box: 4970, Kathmandu, Nepal | Designed By | SB | **DRAWING NAME:**<br>TRAFFIC SAFETY SIGN AND SYMBOL | **Scale:**<br>NOT TO SCALE |
| | | | | Checked By | PMS | | **Date:**<br>August 2019 |
| | | | | Approved By | BNS | | **Drawing No.:**<br>NNMR-TYP 03-03 |

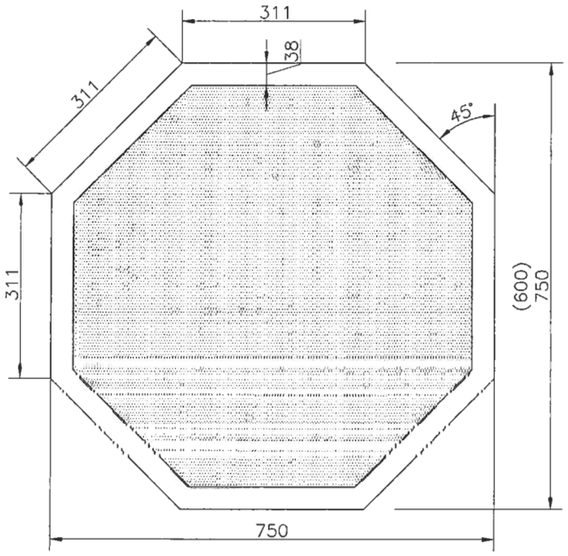


STOP AND GIVE WAY
(SCALE A)

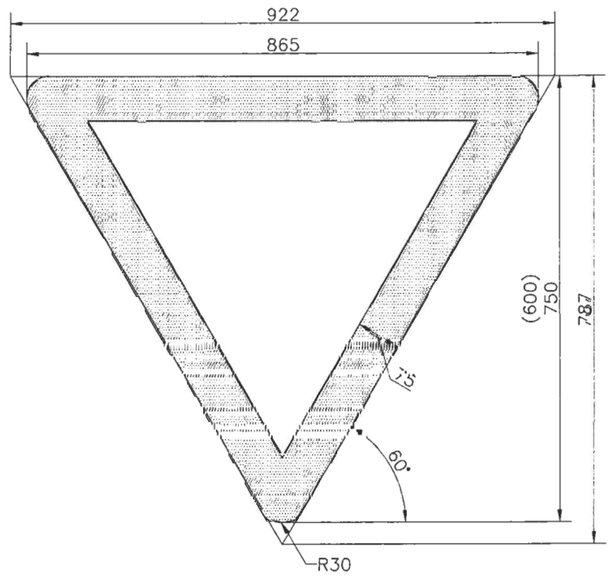


GIVE WAY TO TRAFFIC ON
MAJOR ROAD/ROUNDABOUT
(SCALE A)

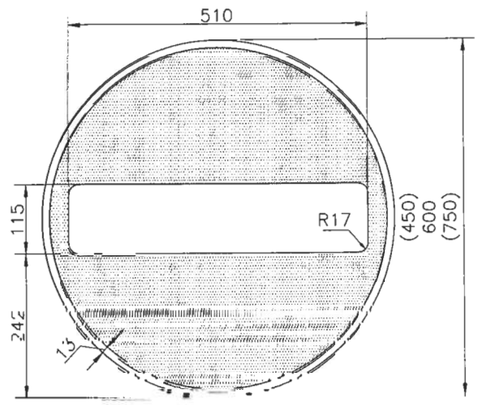


NO ENTRY FOR VEHICLES
(SCALE A)

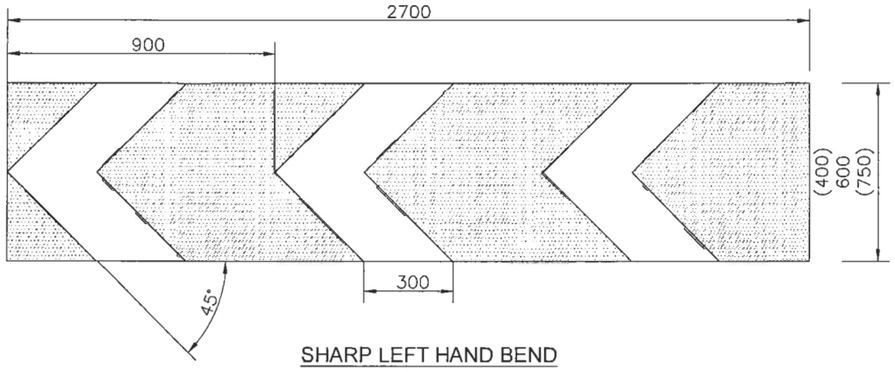


SHARP LEFT HAND BEND
(RIGHT IF SIGN REVERSED)
(SCALE B)

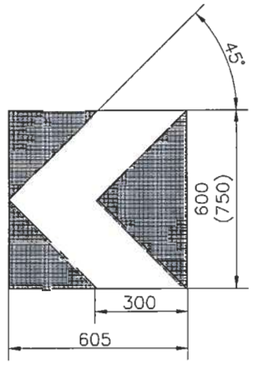


SINGLE CHEVRON VARIATION
(SCALE B)

NOTES :-

- ALL DIMENSIONS SHOWN IN MILLIMETRES
- IF USING ALTERNATIVE OVERALL SIGNS DIMENSIONS, SHOWN IN BRACKETS, THE OTHER SIGN DIMENSIONS

RED

WHITE

| EMPLOYER | PROJECT | DESIGN CONSULTANT | | | | DRAWING NAME: | Scale: | Date: |
|---|---|---|---|---|---|---|---|---|
| Government of Nepal<br>Ministry of Physical Infrastructure and Transport<br>**Department of Roads**<br>**Development Cooperation Implementation Division** | Nepal India Regional Trade and Transport Project (NIRTTP)<br>(IDA CREDIT No. 5273 - NEP)<br>Detailed Design for Improvement of Kathmandu (Nagdhunga) - Naubise - Mugling Road and Bridges | Intercontinental Consultants & Technocrats Pvt. Ltd.<br>A-8, Green Park, New Delhi - 110016<br>Ph : 4086-3000, Fax 2685-5252<br>In Joint Venture With<br>Soosung Engineering Co. Ltd., South Korea | In Association With<br>Full Bright Consultancy (Pvt.) Ltd.<br>316,Baburam Acharya Sadak<br>Sinamangal, Kathmandu, GPO Box: 4970, Kathmandu, Nepal | Designed By | SB | TRAFFIC SAFETY SIGN AND SYMBOL | NOT TO SCALE | August 2019 |
| | | | | Checked By | PMS | | | **Drawing No.:** NNMR-TYP 03-04 |
| | | | | Approved By | BNS | | | |

# FRONT ELEVATION

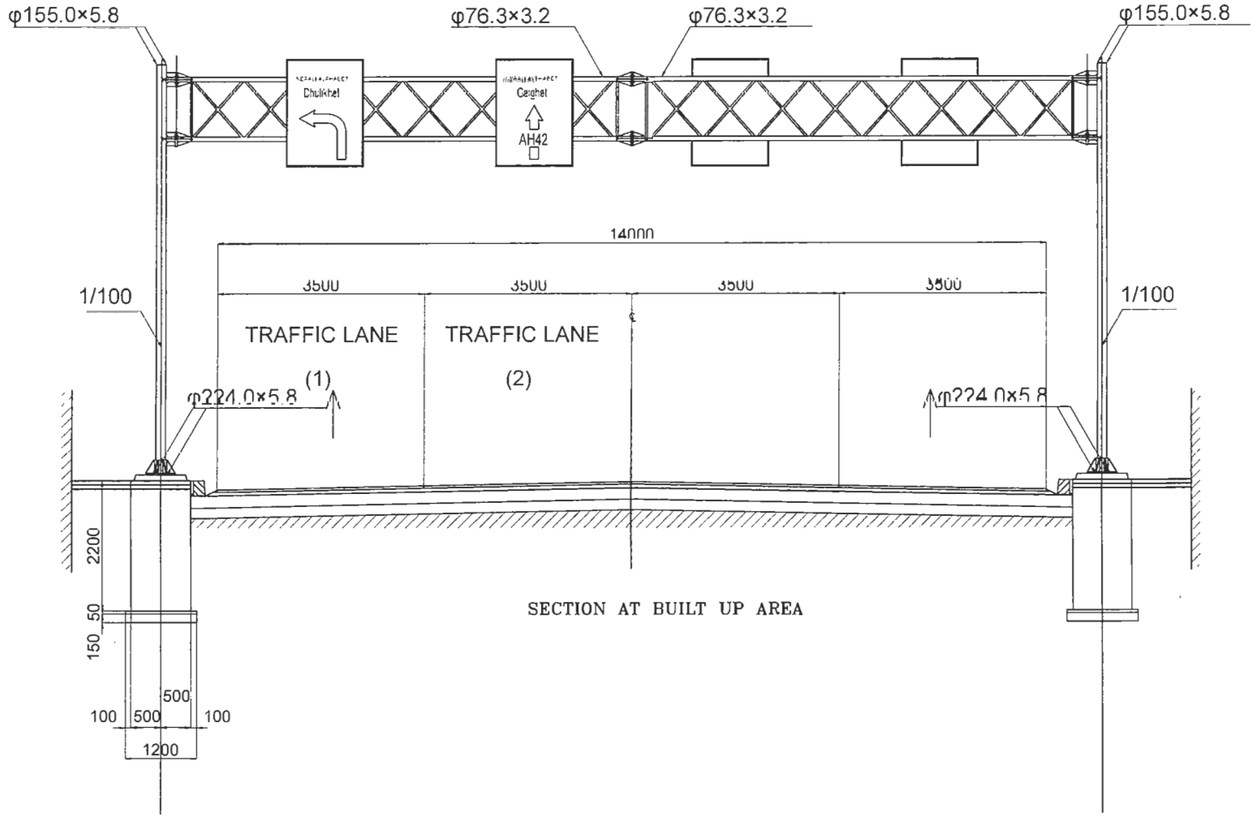


SECTION AT BUILT UP AREA

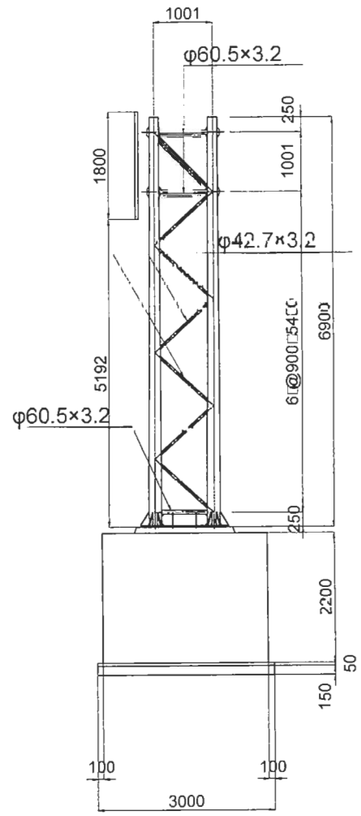


SIGN BOARD S 1:50

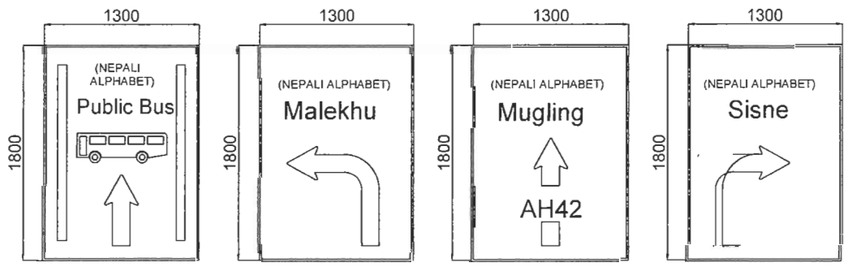


BASE PLATE S 1:50

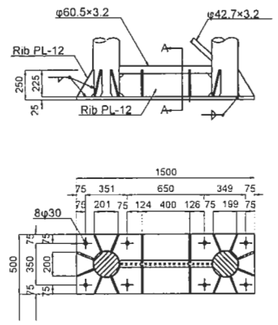


ANCHOR BOLT S 1:50

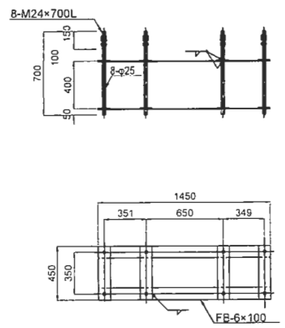


ATTACHMENT OF BEAM S 1:50

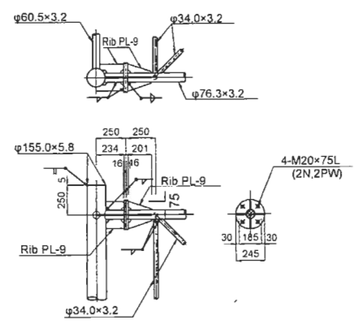


A-A SECTION S 1:50

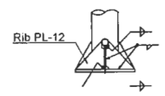


ATTACHMENT OF SIGN BOARD S 1:50

| EMPLOYER | PROJECT | DESIGN CONSULTANT | | | | | |
|---|---|---|---|---|---|---|---|
| Government of Nepal<br>Ministry of Physical Infrastructure and Transport<br>**Department of Roads**<br>**Development Cooperation Implementation Division** | Nepal India Regional Trade and Transport Project<br>(NIRTTP)<br>(IDA CREDIT No. 5273 - NEP)<br>Detailed Design for Improvement of Kathmandu (Nagdhunga) - Naubise - Mugling Road and Bridges | Intercontinental Consultants & Technocrats Pvt. Ltd.<br>A-8, Green Park, New Delhi - 110016<br>Ph : 4086-3000, Fax 2685-5252<br>In Joint Venture With<br>Soosung Engineering Co. Ltd., South Korea | In Association With<br>Full Bright Consultancy (Pvt.) Ltd.<br>316,Baburam Acharya Sadak<br>Sinamangal, Kathmandu, GPO Box: 4970, Kathmandu, Nepal | Designed By | SB | **DRAWING NAME:**<br>TYPICAL DRAWINGS OF OVERHEAD TYPED TRAFFIC SIGN | **Scale:** |
| | | | | Checked By | PMS | | **Date:**<br>August 2019 |
| | | | | Approved By | BNS | | **Drawing No.:**<br>NNMR-TYP 03-05 |

## FO□NDATION DETAIL S□1:20

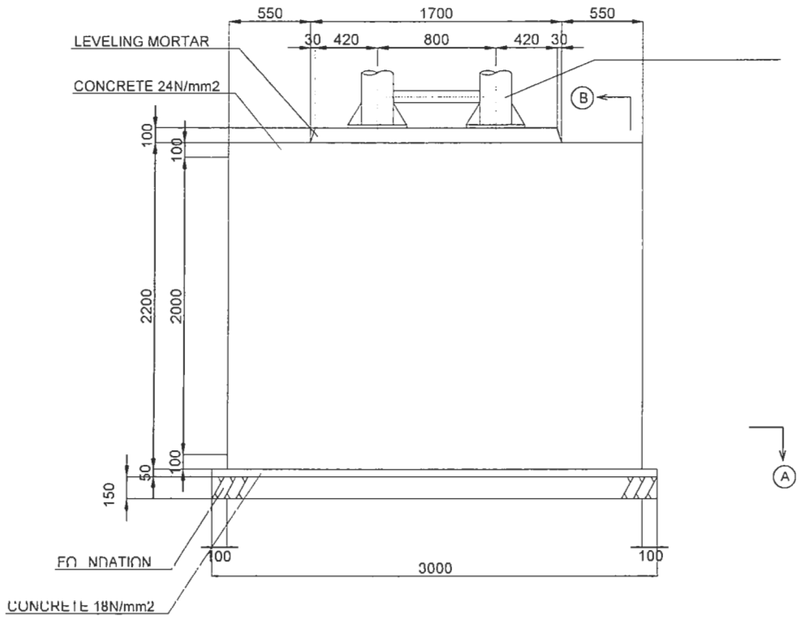


## SECTION-B S□1:20

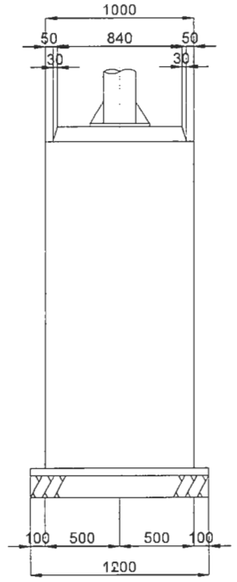


## ANCHOR DETAIL S□1:10

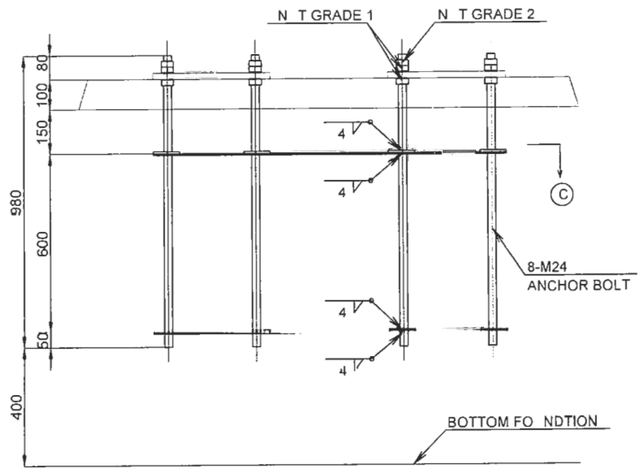


## SECTION-A S□1:20

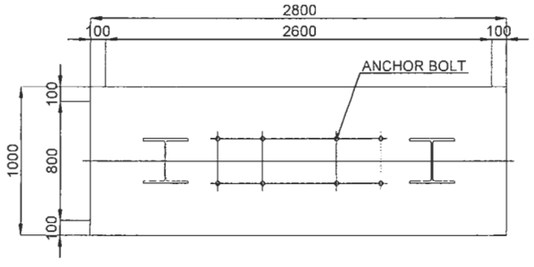


## SECTION-C S□1:10

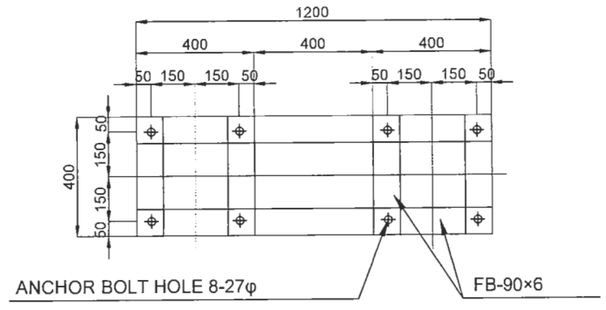


| EMPLOYER | PROJECT | DESIGN CONSULTANT | | | | | |
|---|---|---|---|---|---|---|---|
| Government of Nepal<br>Ministry of Physical Infrastructure and Transport<br>**Department of Roads**<br>**Development Cooperation Implementation Division** | Nepal India Regional Trade and Transport Project (NIRTTP)<br>(IDA CREDIT No. 5273 - NEP)<br>Detailed Design for Improvement of Kathmandu (Nagdhunga) - Naubise - Mugling Road and Bridges | Intercontinental Consultants & Technocrats Pvt. Ltd.<br>A-8, Green Park, New Delhi - 110016<br>Ph : 4086-3000, Fax 2685-5252<br>In Joint Venture With<br>Soosung Engineering Co. Ltd., South Korea | In Association With<br>Full Bright Consultancy (Pvt.) Ltd.<br>316,Baburam Acharya Sadak<br>Sinamangal, Kathmandu, GPO<br>Box: 4970, Kathmandu, Nepal | Designed By | SB | **DRAWING NAME:**<br>TYPICAL DRAWINGS OF OVERHEAD TYPED TRAFFIC SIGN | **Scale:** |
| | | | | Checked By | PMS | | **Date:**<br>August 2019 |
| | | | | Approved By | BNS | | **Drawing No.:**<br>NNMR-TYP 03-06 |

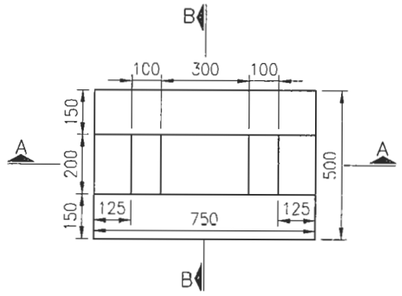


PLAN

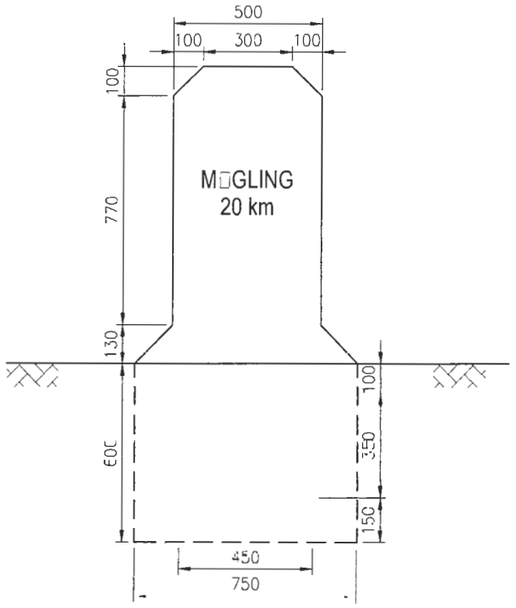


ELEVATION

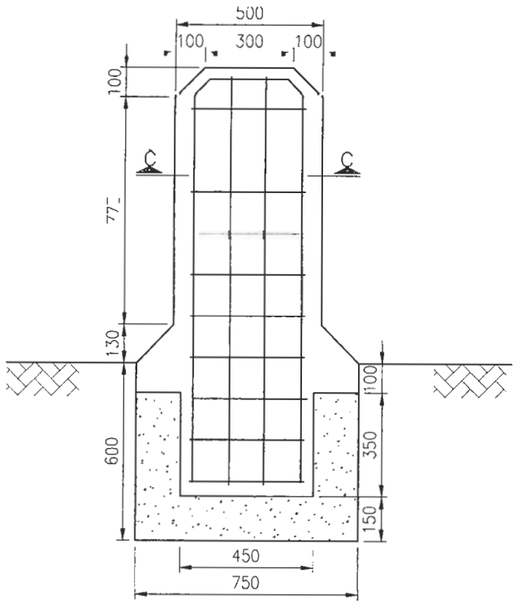


SECTION A - A

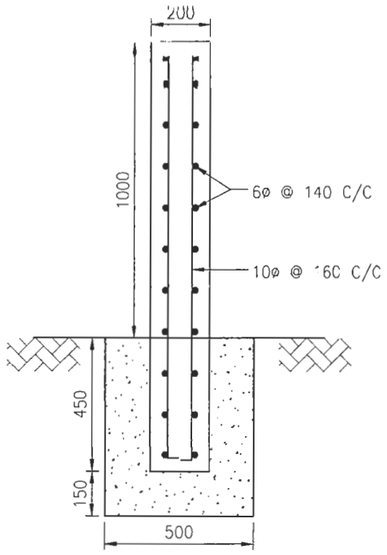


SECTION B - B

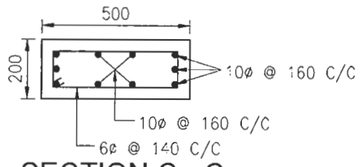


SECTION C - C

5 KILOMETER POST

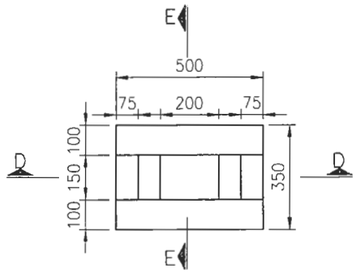


PLAN

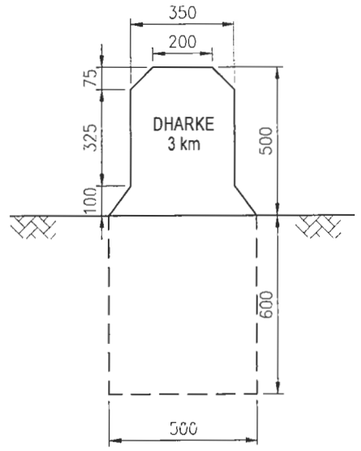


ELEVATION

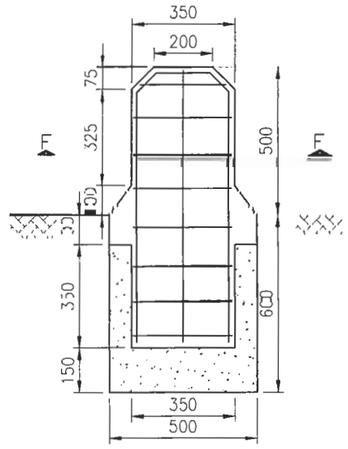


SECTION D - D

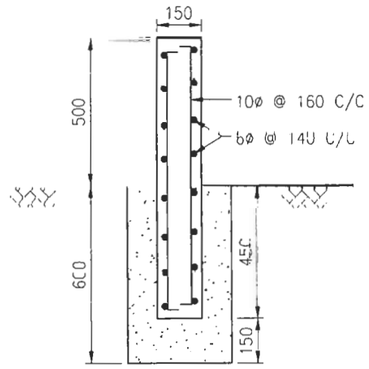


SECTION E - E

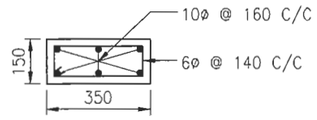


SECTION F - F

KILOMETER POST

NOTES:

1. ALL DIMENSIONS ARE IN mm NLESS OTHERWISE STATED.
2. ALTERNATE km AND 5 km POST WILL BE IN NEPALI AND ENGLISH LANG AGE.
3. LETTERING SI E WILL BE AS RECOMMENDED IN TRAFFIC SIGN MAN AL OR AS DIRECTED BY THE ENGINEER.
4. THE BACK GRO ND OF THE POST WILL BE PAINTED IN WHITE AND DEEP BLACK PAINTS WILL BE SED FOR LETTERS AND N MERALS.
5. IN HILLY TERRAIN THE POST WILL BE LOCATED IN THE VALLEY SIDE OF THE ROAD AND IN PLAIN AREA IT WILL BE LOCATED ON THE LEFT SIDE AS ONE PROCEEDS FROM THE STARTING STATION TOWARDS THE TERMINAL STATION.

| EMPLOYER | PROJECT | DESIGN CONSULTANT | | | | | | |
|---|---|---|---|---|---|---|---|---|
| Government of Nepal<br>Ministry of Physical Infrastructure and Transport<br>**Department of Roads**<br>**Development Cooperation Implementation Division** | Nepal India Regional Trade and Transport Project<br>(NIRTTP)<br>(IDA CREDIT No. 5273 - NEP)<br>Detailed Design for Improvement of Kathmandu (Nagdhunga) - Naubise - Mugling Road and Bridges | Intercontinental Consultants & Technocrats Pvt. Ltd.<br>A-8, Green Park, New Delhi - 110016<br>Ph : 4086-3000, Fax 2685-5252<br>In Joint Venture With<br>Soosung Engineering Co. Ltd., South Korea | In Association With<br>Full Bright Consultancy (Pvt.) Ltd.<br>316,Baburam Acharya Sadak<br>Sinamangal, Kathmandu, GPO Box: 4970, Kathmandu, Nepal | Designed By | SB | | **DRAWING NAME:**<br>TYPICAL KILOMETER POST | **Scale:**<br>SCALE 1:20 | **Date:**<br>August 2019 |
| | | | | Checked By | PMS | | | | **Drawing No.:**<br>NNMR-TYP 03-07 |
| | | | | Approved By | BNS | | | | |

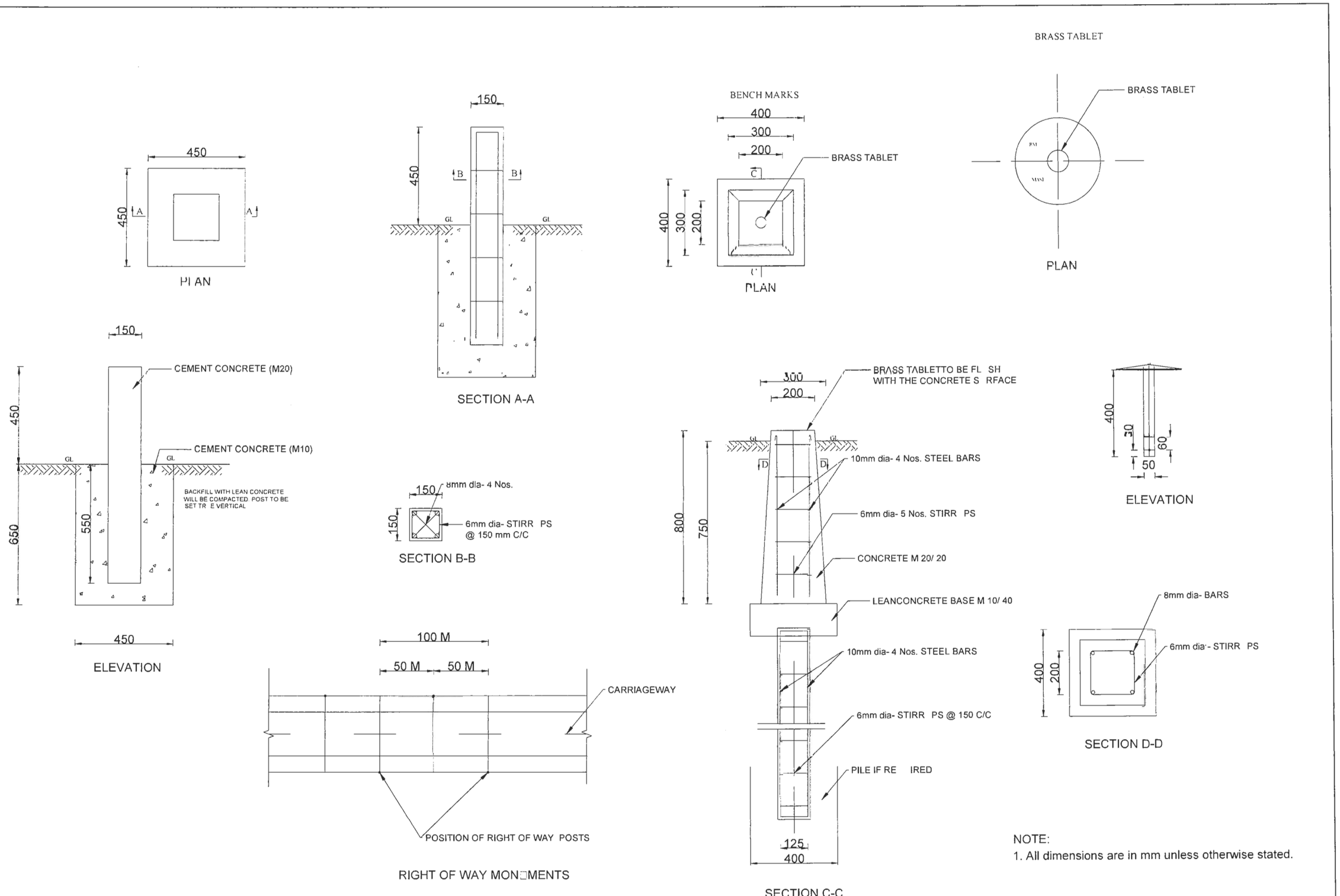


NOTE:
1. All dimensions are in mm unless otherwise stated.

| EMPLOYER | PROJECT | DESIGN CONSULTANT | | | | | | |
|---|---|---|---|---|---|---|---|---|
| Government of Nepal<br>Ministry of Physical Infrastructure and Transport<br>**Department of Roads**<br>**Development Cooperation Implementation Division** | Nepal India Regional Trade and Transport Project (NIRTTP)<br>(IDA CREDIT No. 5273 - NEP)<br>Detailed Design for Improvement of Kathmandu (Nagdhunga) - Naubise - Mugling Road and Bridges | Intercontinental Consultants & Technocrats Pvt. Ltd.<br>A-8, Green Park, New Delhi - 110016<br>Ph : 4086-3000, Fax 2685-5252<br>In Joint Venture With<br>Soosung Engineering Co. Ltd., South Korea | In Association With<br>Full Bright Consultancy (Pvt.) Ltd.<br>316,Baburam Acharya Sadak<br>Sinamangal, Kathmandu, GPO<br>Box: 4970, Kathmandu, Nepal | Designed By | SB | | **DRAWING NAME:**<br>BENCHMARK & ROW MON MENT | **Scale:**<br>NOT TO SCALE | **Date:**<br>August 2019 |
| | | | | Checked By | PMS | | | | **Drawing No.:**<br>NNMR-TYP 03-08 |
| | | | | Approved By | BNS | | | | |

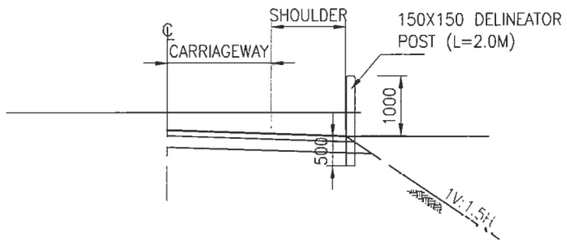


DELINEATOR FOR EMBANKMENT
(EMBANKMENT HEIGHT□3.0 m)

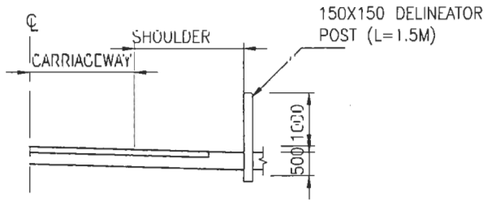


DELINEATOR FOR PLAIN AREA

RECOMMENDED SPACING FOR DELINEATOR.

| RADIUS OF Horizontal Curve(M) | SPACING OF POST DELINEATOR(M) | PURPOSE OF DELINEATION(M) |
|---|---|---|
| 30 | 6.0 | Horizontal Curve |
| 50 | 8.0 | Horizontal Curve |
| 100 | 12.0 | Horizontal Curve |
| 200 | 20.0 | Horizontal Curve |
| 300 | 25.0 | Horizontal Curve |
| 400 | 30.0 | Horizontal Curve |
| 500 | 35.0 | Horizontal Curve |
| 600 | 38.0 | Other Purpose |
| 700 | 42.0 | Other Purpose |
| 800 | 45.0 | Other Purpose |
| 900 | 48.0 | Other Purpose |
| 1000 | 50.0 | Other Purpose |
| >1000 AND STRAIGHTS | 70.0 | Other Purpose |

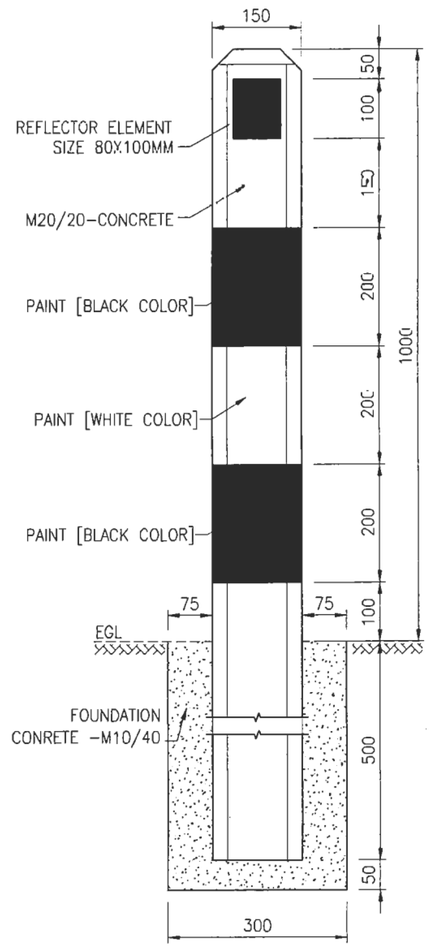


SECTIONAL ELEVATION

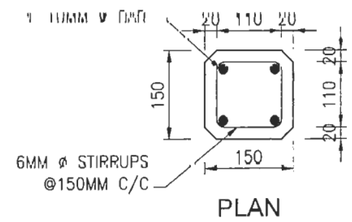


PLAN

DETAILING OF DELINEATOR POST

WORK QUANTITIES

| ITEM NO | Description | UNIT | QUANTITY |
|---|---|---|---|
| | EARTH WORK EXACAVATION | m3 | 0.03 |
| | M20/20 – CONCRETE | m3 | 0.033 |
| | M10/40 – CONCRETE | m3 | 0.02 |
| | FORMWORK (F2) | m2 | 0.735 |
| | 10MM ø BAR | Kg. | 3.72 |
| | 6MM ø STIRRUPS | Kg. | 1.20 |

| EMPLOYER | PROJECT | DESIGN CONSULTANT | | | | | |
|---|---|---|---|---|---|---|---|
| Government of Nepal<br>Ministry of Physical Infrastructure and Transport<br>**Department of Roads**<br>**Development Cooperation Implementation Division** | Nepal India Regional Trade and Transport Project (NIRTTP)<br>(IDA CREDIT No. 5273 - NEP)<br>Detailed Design for Improvement of Kathmandu (Nagdhunga) - Naubise - Mugling Road and Bridges | Intercontinental Consultants & Technocrats Pvt. Ltd.<br>A-8, Green Park, New Delhi - 110016<br>Ph : 4086-3000, Fax 2685-5252<br>In Joint Venture With<br>Soosung Engineering Co. Ltd., South Korea | In Association With<br>Full Bright Consultancy (Pvt.) Ltd.<br>316,Baburam Acharya Sadak<br>Sinamangal, Kathmandu, GPO<br>Box: 4970, Kathmandu, Nepal | Designed By | SB | **DRAWING NAME:**<br>TYPICAL ROAD DELINEATOR | **Scale:**<br>0 100 200 |
| | | | | Checked By | PMS | | **Date:**<br>August 2019 |
| | | | | Approved By | BNS | | **Drawing No.:**<br>NNMR-TYP 03-09 |

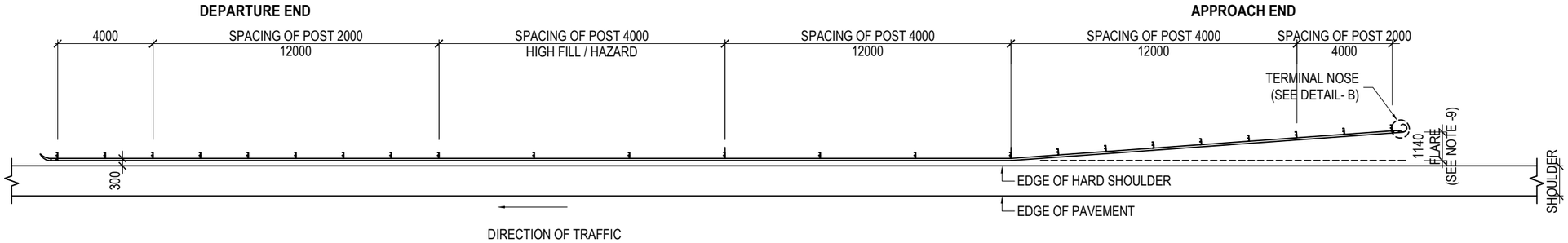


**GUARD RAIL FOR HIGH FILL (3m) OR HAZARD**
SCALE A

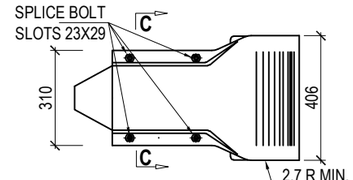


**SIDE VIEW**

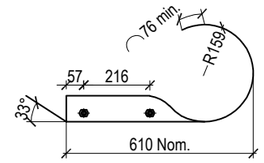


**TOP VIEW**

**TERMINAL NOSE**
DETAIL B
SCALE B

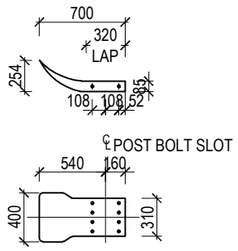


**W-BEAM TERMINAL SECION**
(AT RESTRICTED LOCATIONS)
SCALE D

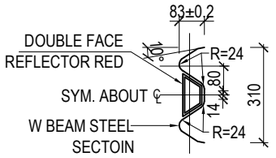


**SECTION B-B**
W BEAM RAIL
(TYPE -1, CLASS B)
SCALE B

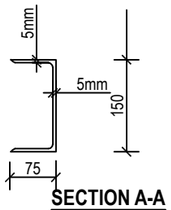


**SECTION A-A**
SCALE E

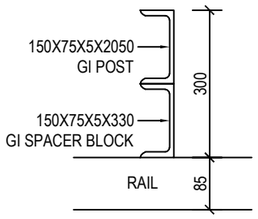


**DETAIL - A**
PLAN
SCALE E

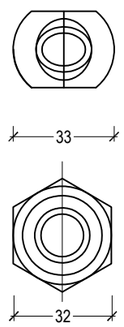


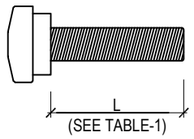


TABLE NO.1

| L (mm) | THREAD LENGTH (mm) |
|---|---|
| 35 | FULL THREAD |
| 50 | 45mm THREAD |
| 255 | 100mm THREAD |
| 460 | 150mm THREAD |

**POST OR SPLICE BOLT AND NUT**
SCALE C

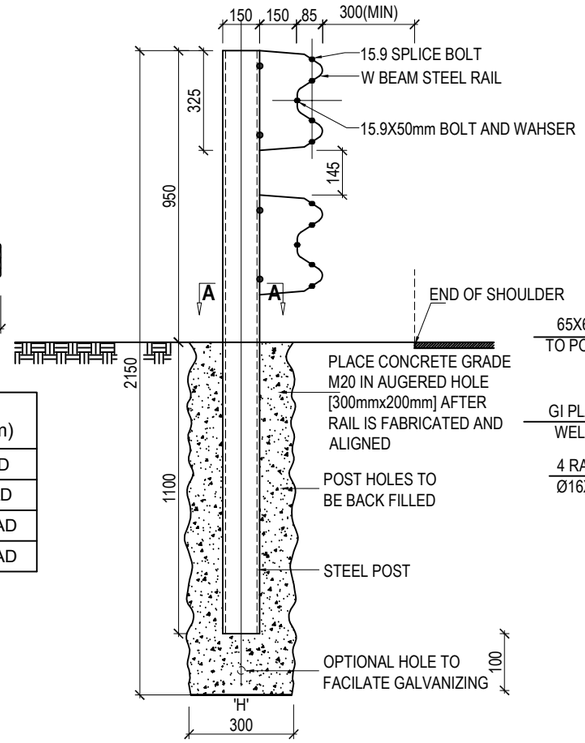


**STEEL POST DETAIL**
(FOR SINGLE GUARD RAIL)
SCALE B

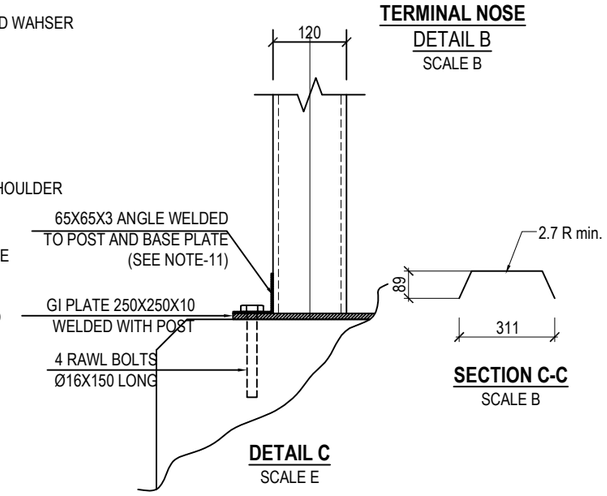


**DETAIL C**
SCALE E

**SECTION C-C**
SCALE B

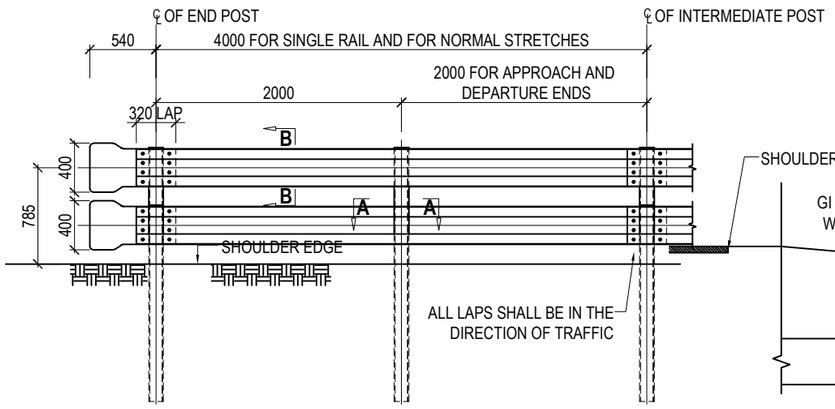


**TYPICAL ELEVATION**
(WHERE FISH TAIL IS USED)
SCALE D

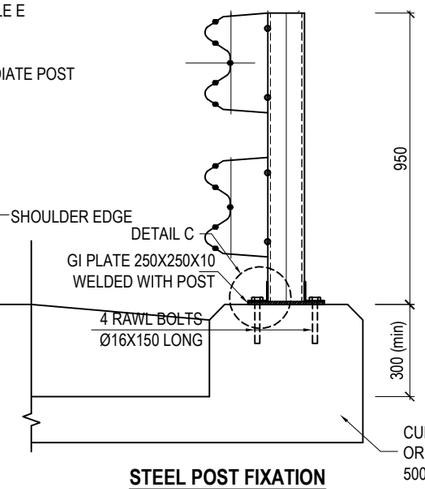


**STEEL POST FIXATION**
(AT STRUCTURES/CONCRETE BLOCK)
SCALE B

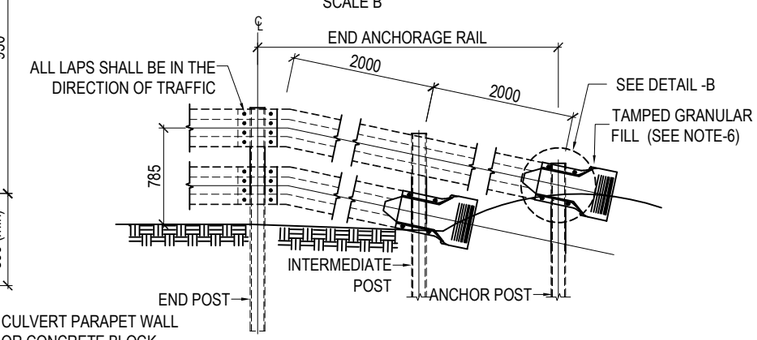


**TYPICAL END RAIL ANCHORAGE**
(RAMP DOWN SECTION)
SCALE D

**NOTES**

1. ALL DIMENSIONS ARE IN MILLIMETERS UNLESS SHOWN OTHERWISE.
2. ALL LAPS SHALL BE IN THE DIRECTION OF TRAFFIC.
3. W-BEAM TERMINAL SECTIONS SHALL BE USED IN PLACE OF END RAIL ANCHORAGE AT RESTRICTED LOCATIONS AS APPROVED BY THE ENGINEER.
4. W-BEAM RAIL SECTIONS SHALL CONFORM TO IRC.
5. WHERE THE GUARDRAIL HAS TO FOLLOW A CURVE OF LESS THAN 45m RADIUS, THE BEAM SHALL BE CURVED TO SUIT, BY THE BEAM MANUFACTURER.
6. CONTRACTOR SHALL PREPARE DRAWINGS SHOWING LOCATION, ELEVATIONS AND SPACING OF POSTS EACH CULVERTS/HIGH FILL LOCATION AND SHALL OBTAIN ENGINEER'S APPROVAL. THE LOCATION AND EXTENT OF GUARD RAIL CAN BE REDUCED DEPENDING UPON SITE CONDITIONS OF AS DIRECTED BUY THE ENGINEER.
7. BACKFILLING OF THE POST HOLES WILL BE CARRIED OUT AS FOLLOWS:
   - IN CASE OF ROCK, CORED HOLES-250 DIA (AS MADE) WILL BE BACK FILLED WITH LEAN CONCRETE.
   - IN CASE OF STRATA OTHER THAN ROCK, HOLES-300 DIA (AS MADE) WILL BE BACK FILLED WITH LEAN CONCRETE OR THEPOSTS MAY BE HAMMERED IN PLACE AS APPROVED BY THE ENIGEER. NO EXTRA PAYMET SHALL BE MADE TO THE CONTRACTOR FOR CORING AND OR CONCETING FOR POST FIXATION.
9. EMBANKMENT MAY BE WIDENED, WHERE NECESSARY, TO ACCOMODATE GUARD RAIL FLARE AT APPROACH END.
10. POSTS DAMAGED DURING HAMMERING SHALL BE REPLACED BY THE CONTRACTOR AT NO EXTRA COST TO THE EMPLOYER.
11. ALL WELDING OPERATIONS TO BE CARRIED OUT PRIOR TO GALVANIZING.

| EMPLOYER | PROJECT | DESIGN CONSULTANT | | | | | |
|---|---|---|---|---|---|---|---|
| Government of Nepal<br>Ministry of Physical Infrastructure and Transport<br>**Department of Roads**<br>**Development Cooperation Implementation Division** | Nepal India Regional Trade and Transport Project<br>(NIRTTP)<br>(IDA CREDIT No. 5273 - NEP)<br>Detailed Design for Improvement of Kathmandu (Nagdhunga) - Naubise - Mugling Road and Bridges | Intercontinental Consultants & Technocrats Pvt. Ltd.<br>A-8, Green Park, New Delhi - 110016<br>Ph : 4086-3000, Fax 2685-5252<br>In Joint Venture With<br>Soosung Engineering Co. Ltd., South Korea | In Association With<br>Full Bright Consultancy (Pvt.) Ltd.<br>316,Baburam Acharya Sadak<br>Sinamangal, Kathmandu, GPO<br>Box: 4970, Kathmandu, Nepal | Designed By | SB | **DRAWING NAME:**<br>STEEL SAFETY BARRIER / CRASH BARRIER | **Scale:**<br>NOT TO SCALE |
| | | | | Checked By | PMS | | **Date:**<br>August 2019 |
| | | | | Approved By | BNS | | **Drawing No.:**<br>NNMR-TYP 03-10 |

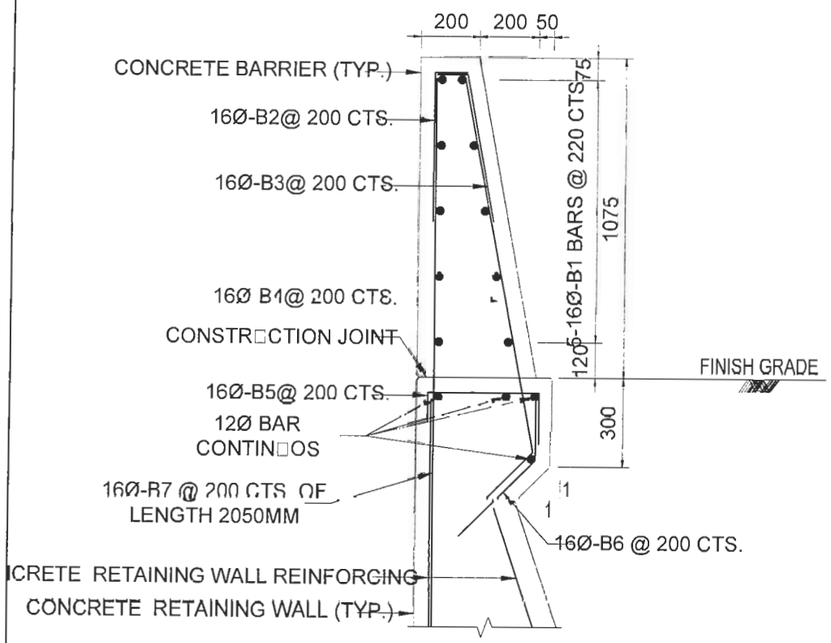


## TYPICAL SECTION

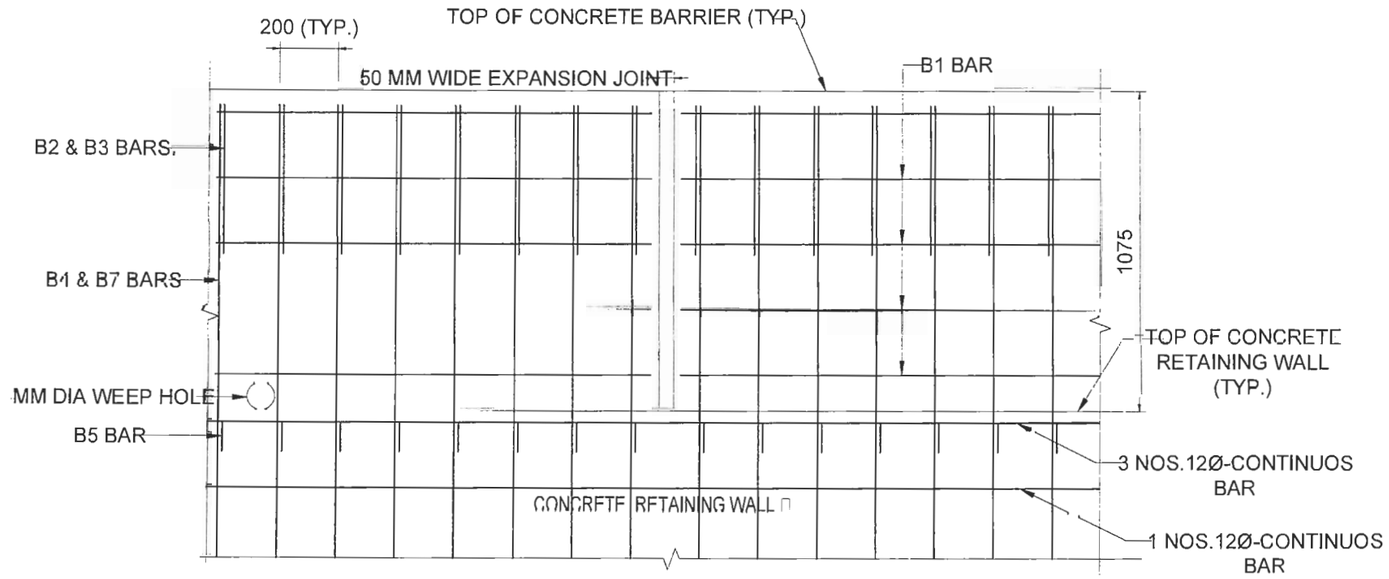


RETAINING WALL REINFORCING NOT SHOWN FOR CLARITY.

## ELEVATION

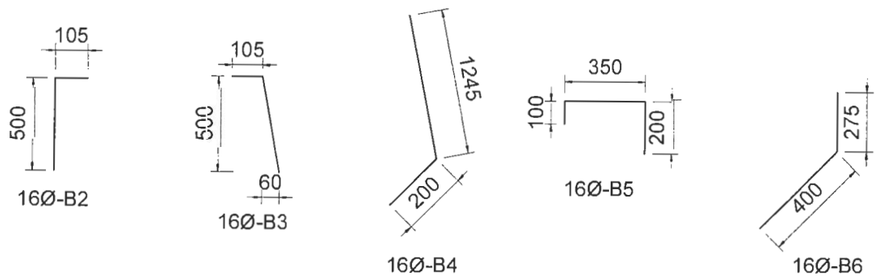


## REBAR SCHEDULE

NOTE:

1. ALL BARRIER SHALL BE CAST IN PLACE.
2. WALLS SHALL BE BACKFILLED BEFORE BARRIER IS PLACED.
3. ALL EXPOSED EDGES OF BARRIER C RB SHALL HAVE EITHER A 12MM RADI S OR 10MM BEVEL NLESS OTHERWISE NOTED.
4. USE A MINIMUM LAP OF 95MM FOR 16Ø HORIZONTAL BARRIER CURB REBAR.
5. CONCRETE IN THE BARRIER C RB SHALL BE OF 25 MPA. REINFORCING STEEL SHALL BE OF 415 MPA.
6. THIS BARRIER MEETS THE CRASH TEST RE IREMENTS OF NCHRP REPORT 350 FOR TEST LEVEL 4 (TL-4).
7. CLEARANCE TO REINFORCING STEEL IN BARRIER TO BE 25MM, EXCEPT AS NOTED. MINIM M CONCRETE EDGE DISTANCE, TO THE REINFORCING SHOWN, SHALL BE MAINTAINED.
8. THE 50MM OPEN EXPANSION JOINTS SHALL BE PLACED ON THE BARRIER AT A MAXIM M SPACING NOT EXCEEDING 90 METERS. CONTRACTION JOINTS SHALL BE PLACED AT EVERY 6 TO 8 METERS INTERVALS. PREFORMED EXPANSION JOINT FILLER MATERIAL SHALL BE SED.
9. 8MM DIAMETER WEEP HOLES AT A MAXIM M SPACING OF 3 METERS SHALL BE PROVIDED AT THE LOWEST POINT POSSIBLE. WEEP HOLES SHALL ALIGN WITH THE RETAINING WALL IF EXIST. WEEP HOLES MAY BE FORMED WITH ANY PRACTICAL METHOD.

| EMPLOYER | PROJECT | DESIGN CONSULTANT | | | | | | |
|---|---|---|---|---|---|---|---|---|
| Government of Nepal<br>Ministry of Physical Infrastructure and Transport<br>**Department of Roads**<br>**Development Cooperation Implementation Division** | Nepal India Regional Trade and Transport Project (NIRTTP)<br>(IDA CREDIT No. 5273 - NEP)<br>Detailed Design for Improvement of Kathmandu (Nagdhunga) - Naubise - Mugling Road and Bridges | Intercontinental Consultants & Technocrats Pvt. Ltd.<br>A-8, Green Park, New Delhi - 110016<br>Ph : 4086-3000, Fax 2685-5252<br>In Joint Venture With<br>Soosung Engineering Co. Ltd., South Korea | In Association With<br>Full Bright Consultancy (Pvt.) Ltd.<br>316,Baburam Acharya Sadak<br>Sinamangal, Kathmandu, GPO<br>Box: 4970, Kathmandu, Nepal | Designed By | SB | | **DRAWING NAME:**<br>BARRIER DETAIL ON TOP OF REINFORCED CONCRETE RETAINING WALL | **Scale:**<br>1 : 200 | **Date:**<br>August 2019 |
| | | | | Checked By | PMS | | | | **Drawing No.:**<br>NNMR-TYP 03-11 |
| | | | | Approved By | BNS | | | | |

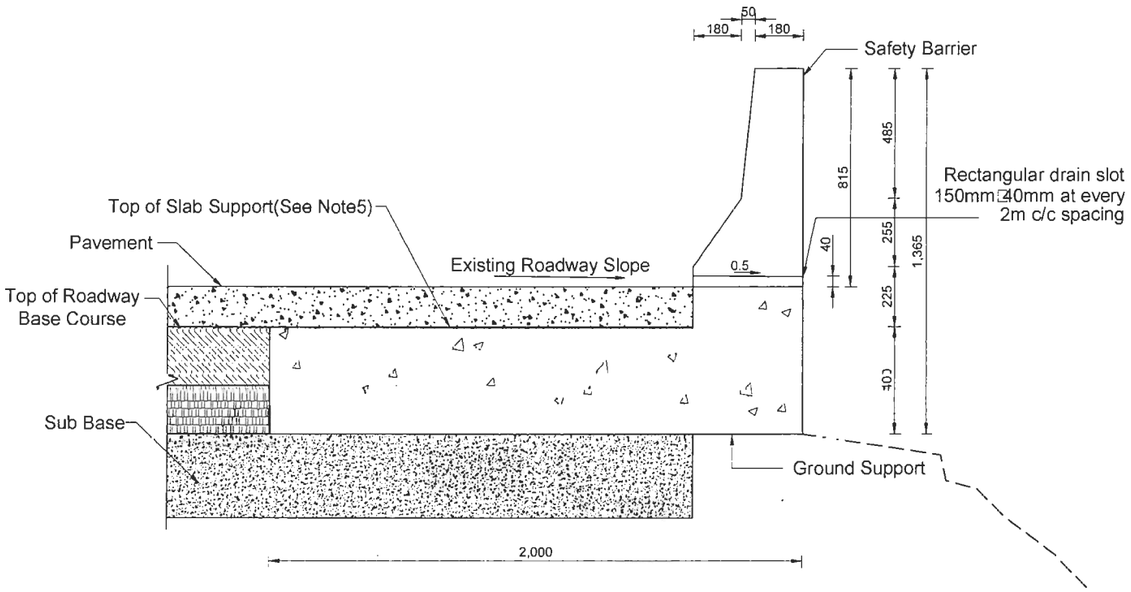


General Layout of Typical Safety Barrier-Ground Support System

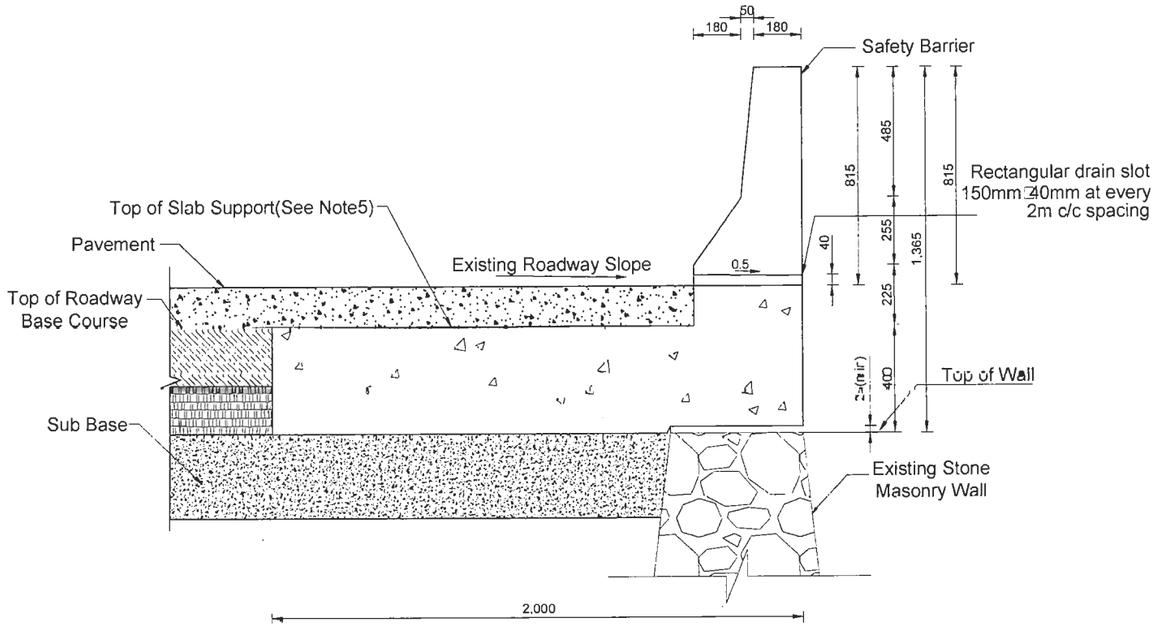


General Layout of Typical Safety Barrier-Slab Support System

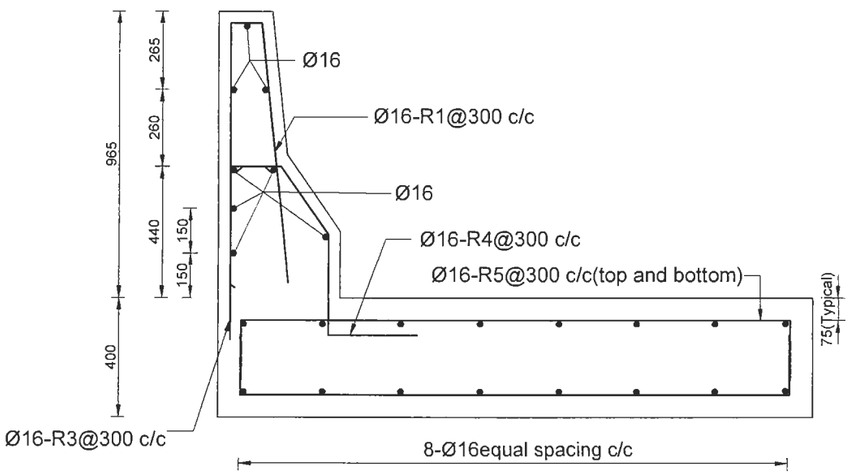


Reinforcing Detail Section

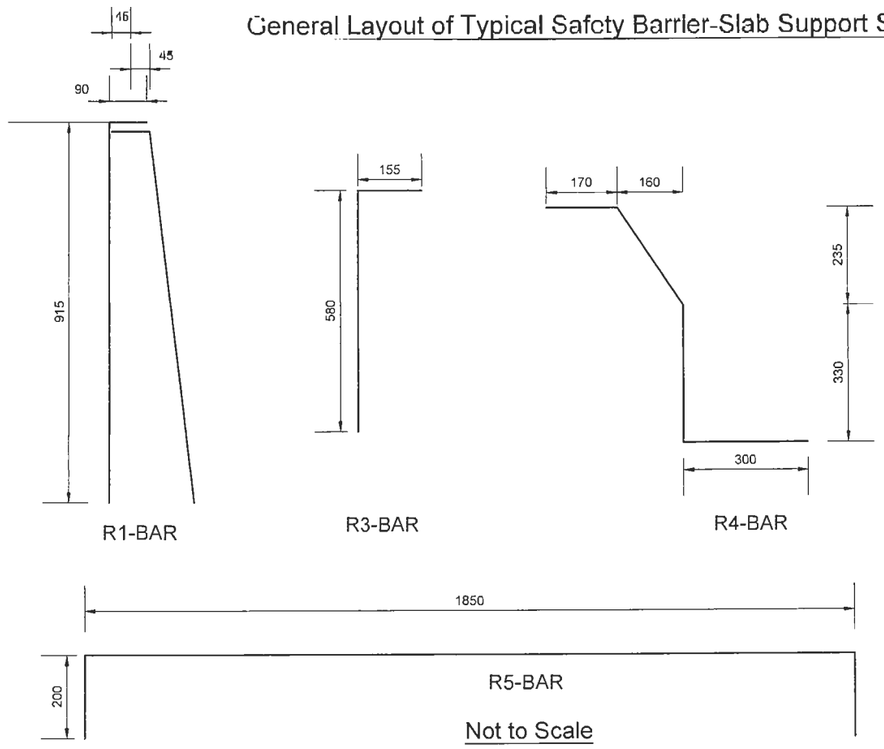


Not to Scale

## Notes:

1. All Concrete shall be M20.
2. All reinforcing steel shall be Fe500.
3. Each Segment of the barrier slab support system shall not be less than 8m.
4. All minimum clearance shall be 40mm unless otherwise noted.
5. Top of slab shall be flushed with top of roadway base course.
6. h□assumed 150mm. Contractor shall verify thickness of the pavement before safety barrier-slab support system is placed.
7. All dimensions are in mm.

| EMPLOYER | PROJECT | DESIGN CONSULTANT | | | | | |
|---|---|---|---|---|---|---|---|
| Government of Nepal<br>Ministry of Physical Infrastructure and Transport<br>**Department of Roads**<br>**Development Cooperation Implementation Division** | Nepal India Regional Trade and Transport Project<br>(NIRTTP)<br>(IDA CREDIT No. 5273 - NEP)<br>Detailed Design for Improvement of Kathmandu (Nagdhunga) - Naubise - Mugling Road and Bridges | Intercontinental Consultants & Technocrats Pvt. Ltd.<br>A-8, Green Park, New Delhi - 110016<br>Ph : 4086-3000, Fax 2685-5252<br>In Joint Venture With<br>Soosung Engineering Co. Ltd., South Korea | In Association With<br>Full Bright Consultancy (Pvt.) Ltd.<br>316,Baburam Acharya Sadak<br>Sinamangal, Kathmandu, GPO<br>Box: 4970, Kathmandu, Nepal | Designed By | SB | **DRAWING NAME:**<br>SAFETY BARRIER SLAB S□PPORT SYSTEM | **Scale:**<br>1 : 200 |
| | | | | Checked By | PMS | | **Date:**<br>August 2019 |
| | | | | Approved By | BNS | | **Drawing No.:**<br>NNMR-TYP 03-12 |

# ROAD SIDE FURNITURE DETAILS

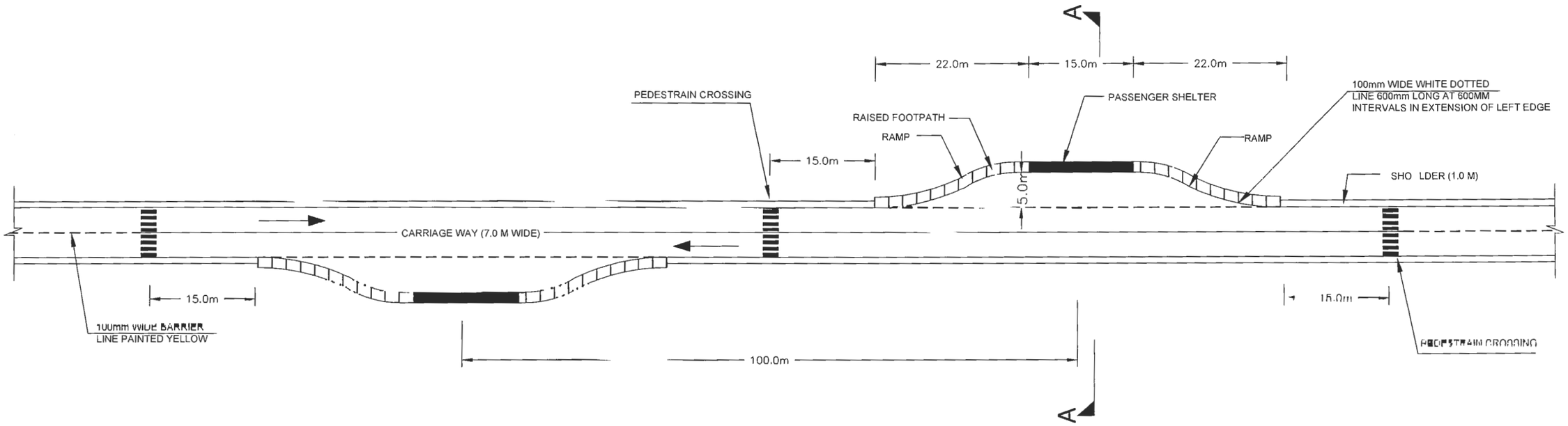


TYPICAL LAYOUT - PICK UP BUS STOP (IN HILLY SECTION)

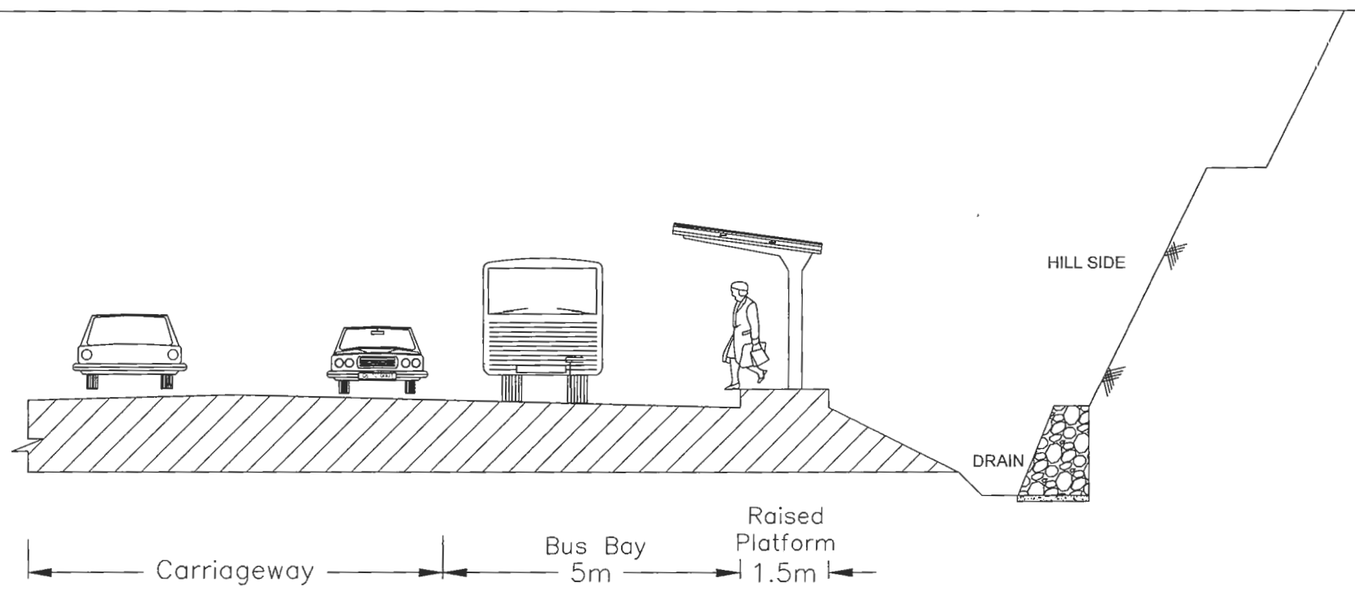


SECTION AT AA

| EMPLOYER | PROJECT | DESIGN CONSULTANT | | | | | |
|---|---|---|---|---|---|---|---|
| Government of Nepal<br>Ministry of Physical Infrastructure and Transport<br>**Department of Roads**<br>**Development Cooperation Implementation Division** | Nepal India Regional Trade and Transport Project (NIRTTP)<br>(IDA CREDIT No. 5273 - NEP)<br>Detailed Design for Improvement of Kathmandu (Nagdhunga) - Naubise - Mugling Road and Bridges | Intercontinental Consultants & Technocrats Pvt. Ltd.<br>A-8, Green Park, New Delhi - 110016<br>Ph : 4086-3000, Fax 2685-5252<br>In Joint Venture With<br>Soosung Engineering Co. Ltd., South Korea | In Association With<br>Full Bright Consultancy (Pvt.) Ltd.<br>316,Baburam Acharya Sadak<br>Sinamangal, Kathmandu, GPO<br>Box: 4970, Kathmandu, Nepal | Designed By | SB | | **DRAWING NAME:**<br>TYPICAL BUS BAY (HILLY SECTION) |
| | | | | Checked By | PMS | | |
| | | | | Approved By | BNS | | |

| Scale: | Date: |
|---|---|
| NOT TO SCALE | August 2019 |
| | **Drawing No.:** NNMR-TYP 04-01 |

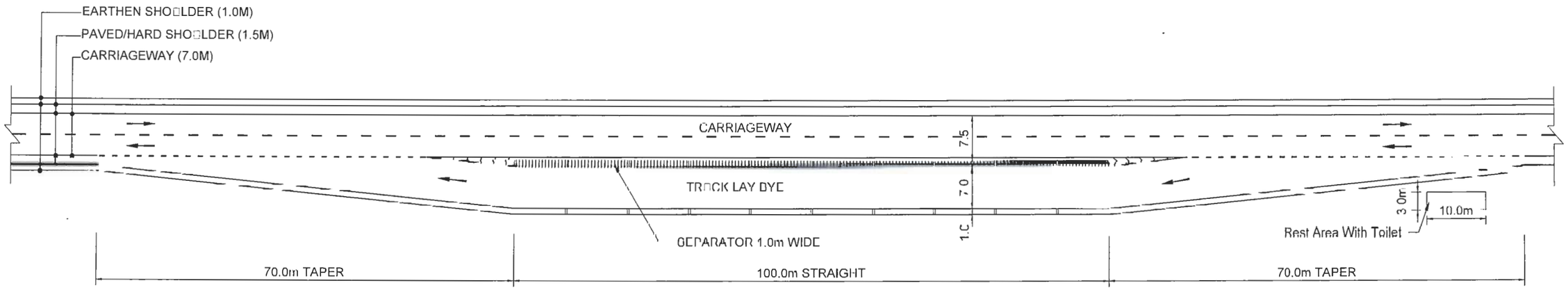


# TYPICAL LAYOUT OF TRUCK LAY BYE

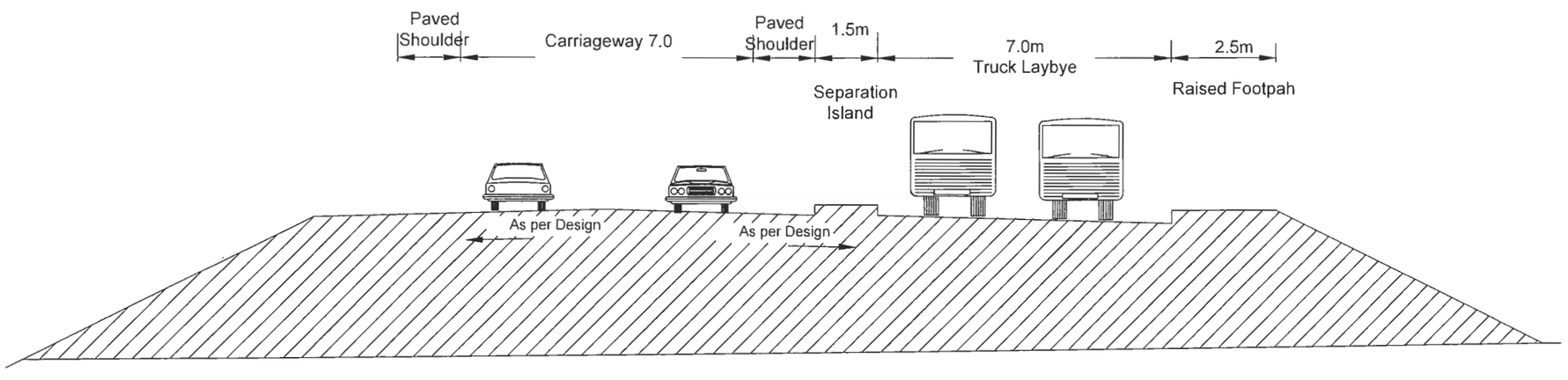


# SECTION AT AA

| EMPLOYER | PROJECT | DESIGN CONSULTANT | | | | | | |
|---|---|---|---|---|---|---|---|---|
| Government of Nepal<br>Ministry of Physical Infrastructure and Transport<br>**Department of Roads**<br>**Development Cooperation Implementation Division** | Nepal India Regional Trade and Transport Project (NIRTTP)<br>(IDA CREDIT No. 5273 - NEP)<br>Detailed Design for Improvement of Kathmandu (Nagdhunga) - Naubise - Mugling Road and Bridges | Intercontinental Consultants & Technocrats Pvt. Ltd.<br>A-8, Green Park, New Delhi - 110016<br>Ph : 4086-3000, Fax 2685-5252<br>In Joint Venture With<br>Soosung Engineering Co. Ltd., South Korea | In Association With<br>Full Bright Consultancy (Pvt.) Ltd.<br>316,Baburam Acharya Sadak<br>Sinamangal, Kathmandu, GPO Box: 4970, Kathmandu, Nepal | Designed By | SB | | **DRAWING NAME:**<br>TYPICAL TRUCK BAY | **Scale:** | **Date:**<br>August 2019 |
| | | | | Checked By | PMS | | | | **Drawing No.:**<br>NNMR-TYP 04-02 |
| | | | | Approved By | BNS | | | | |

# TYPICAL SIDE DRAIN AND CROSS DRAINAGE STRUCTURES

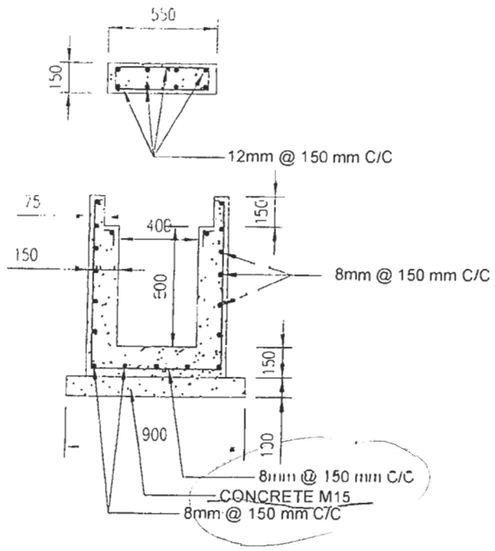


Precast Type-1

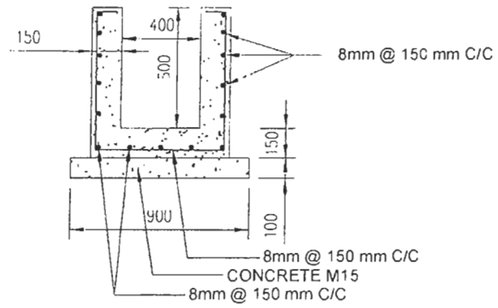


Precast Type-1(A)

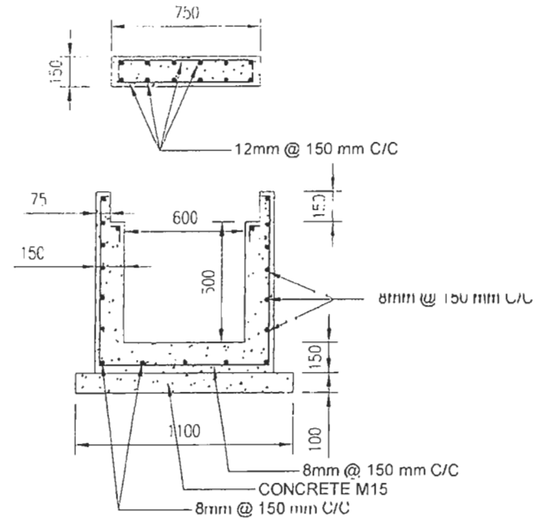


Precast Type-2

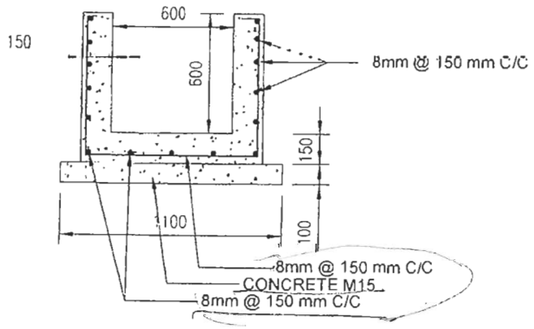


Precast Type-3

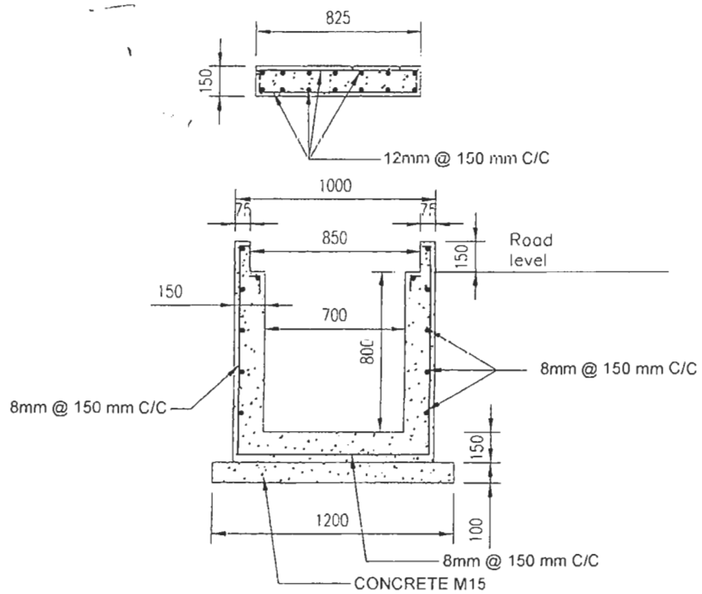


Precast Type-4

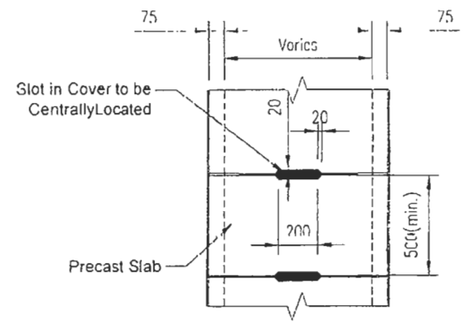


PLAN

Precast RCC Drain Covered

NOTES:

1. M25/20-CONCRETE WILL BE PLACED TO MAINTAIN FLOW DEPTH OF Min 300mm.
2. GRADIENT GREATER THAN 7% DROP WILL BE PROVIDED OR AS DIRECTED.
3. MIN 5% SLOPE BE PROVIDED FOR THE DRAIN WITH DROPS.
4. CONCRETE : M25 FOR COVER SLAB
5. CONCRETE : M15 IN BED.
6. MIN COVER TO REINFORCEMENT IS 25mm.
7. REINFORCEMENT TO BE HIGH YIELD DEFORME BARS GRADE 415.
8. ALL SURFACE DRAIN/SUB SURFACE DRAIN TO BE CONNECTED TO NEAREST PROPOSED OR EXISTING WATER-COURSE
9. ALL DIMENSIONS ARE IN MILLIMETERS UNLESS OTHERWISE MENTIONED.
10. FOR Type-1, Type-2, and Type-3 ALL REINFORCEMENT OF 8mm DIA AT 150mm C/C SPACING

| EMPLOYER | PROJECT | DESIGN CONSULTANT | | | | | | |
|---|---|---|---|---|---|---|---|---|
| Government of Nepal<br>Ministry of Physical Infrastructure and Transport<br>Department of Roads<br>Development Cooperation Implementation Division | Nepal India Regional Trade and Transport Project (NIRTTP)<br>(IDA CREDIT No. 5273 - NEP)<br>Detailed Design for Improvement of Kathmandu (Nagdhunga) - Naubise - Mugling Road and Bridges | Intercontinental Consultants & Technocrats Pvt. Ltd.<br>A-8, Green Park, New Delhi - 110016<br>Ph : 4086-3000, Fax 2685-5252<br>In Joint Venture With<br>Soosung Engineering Co. Ltd., South Korea | FBC | In Association With<br>Full Bright Consultancy (Pvt.) Ltd.<br>316,Baburam Acharya Sadak<br>Sinamangal, Kathmandu. GPO Box: 4970, Kathmandu, Nepal | Designed By | SB | DRAWING NAME: | Scale: |
| | | | | | Checked By | PMS | TYPICAL SIDE DRAINS | NOT TO SCALE |
| | | | | | Approved By | BNS | | Date: August 2019 |
| | | | | | | | | Drawing No.: NNMR-TYP 05-01A |

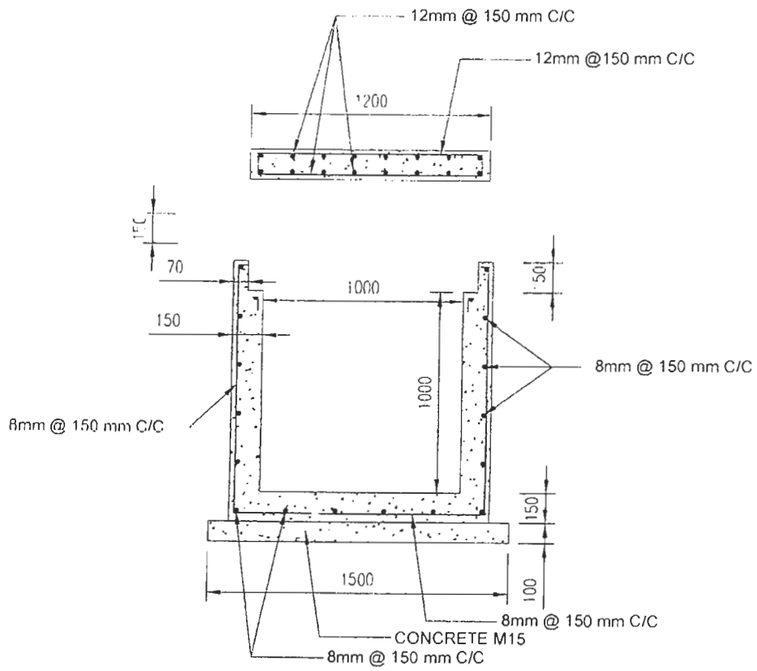


Precast Type-5

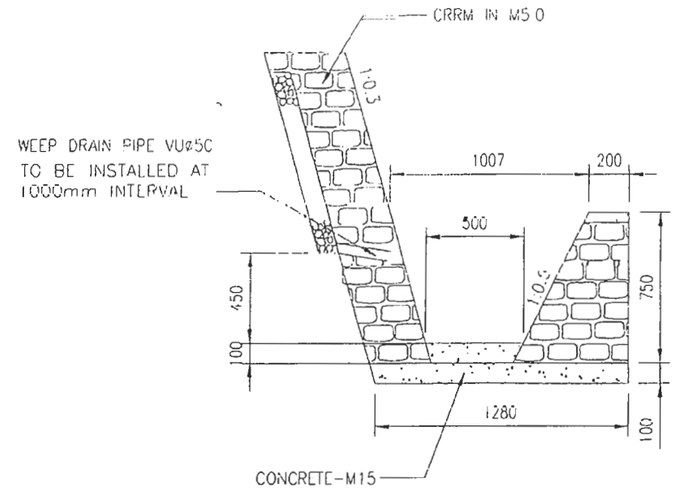


Type-6

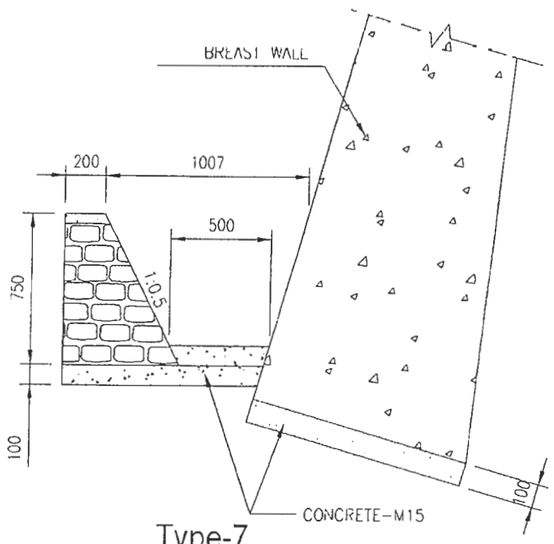


Type-7

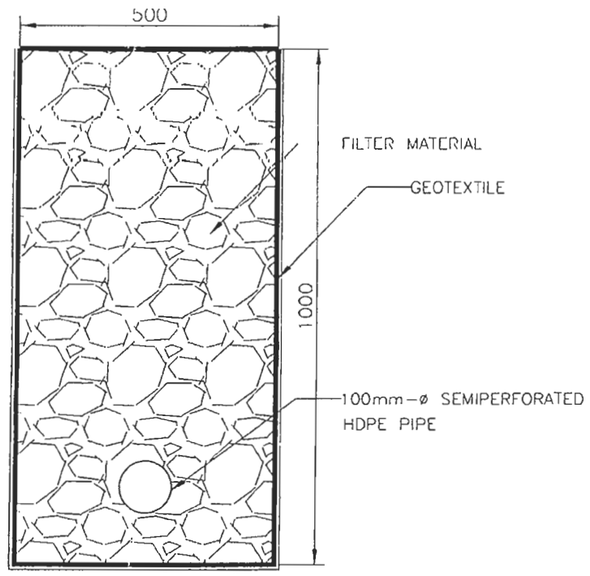


SUB-SURFACE DRAIN BELOW SIDE DRAIN
AT SEEPAGE AREA

NOTES:

1. M25/20-CONCRETE WILL BE PLACED TO MAINTAIN FLOW DEPTH OF Min 300mm.
2. GRADIENT GREATER THAN 7% DROP WILL BE PROVIDED OR AS DIRECTED.
3. MIN 5% SLOPE BE PROVIDED FOR THE DRAIN WITH DROPS.
4. CONCRETE : M25 FOR COVER SLAB
5. CONCRETE : M15 IN BED.
6. MIN COVER TO REINFORCEMENT IS 25mm.
7. REINFORCEMENT TO BE HIGH YIELD DEFORME BARS GRADE 415.
8. ALL SURFACE DRAIN/SUB SURFACE DRAIN TO BE CONNECTED TO NEAREST PROPOSED OR EXISTING WATER-COURSE
9. ALL DIMENSIONS ARE IN MILLIMETERS UNLESS OTHERWISE MENTIONED.
10. FOR Type-1, Type-2, and Type-3 ALL REINFORCEMENT OF 8mm DIA. AT 150mm C/C SPACING

| EMPLOYER | PROJECT | DESIGN CONSULTANT | | | | | | |
|---|---|---|---|---|---|---|---|---|
| Government of Nepal<br>Ministry of Physical Infrastructure and Transport<br>Department of Roads<br>Development Cooperation Implementation Division | Nepal India Regional Trade and Transport Project (NIRTTP)<br>(IDA CREDIT No. 5273 - NEP)<br>Detailed Design for Improvement of Kathmandu (Nagdhunga) - Naubise - Mugling Road and Bridges | Intercontinental Consultants & Technocrats Pvt. Ltd.<br>A-8, Green Park, New Delhi - 110016<br>Ph : 4086-3000, Fax 2685-5252<br>In Joint Venture With<br>Soosung Engineering Co. Ltd., South Korea<br>FBC<br>In Association With<br>Full Bright Consultancy (Pvt.) Ltd.<br>316,Baburam Acharya Sadak<br>Sinamangal, Kathmandu, GPO Box: 4970, Kathmandu, Nepal | Designed By | SB | DRAWING NAME: | Scale: | Date: |
| | | | Checked By | PMS | TYPICAL SIDE DRAINS | NOT TO SCALE | August 2019 |
| | | | Approved By | BNS | | | Drawing No.: NNMR-TYP 05-01B |

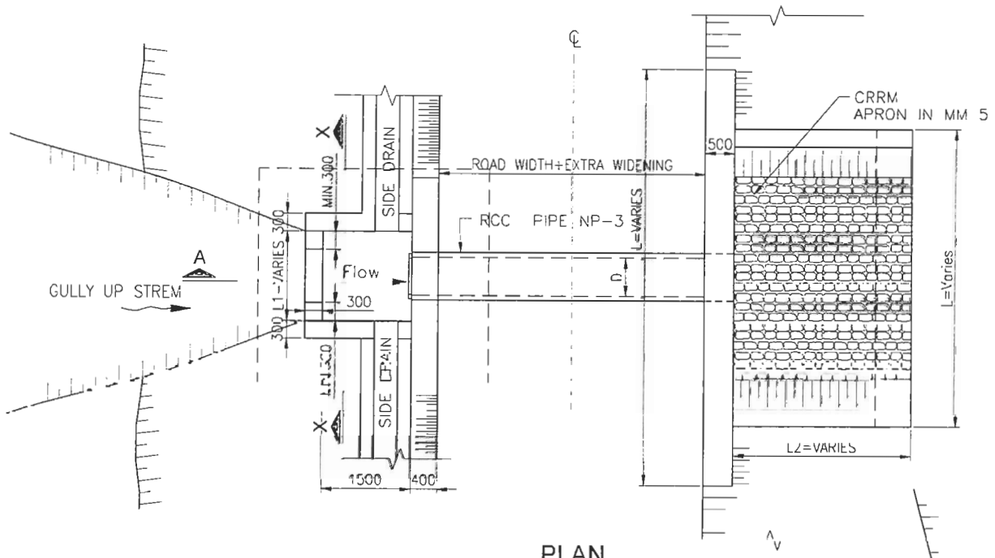


## PLAN

INLET TYPE- B (SINGLE CELL WITH CATCHPIT)

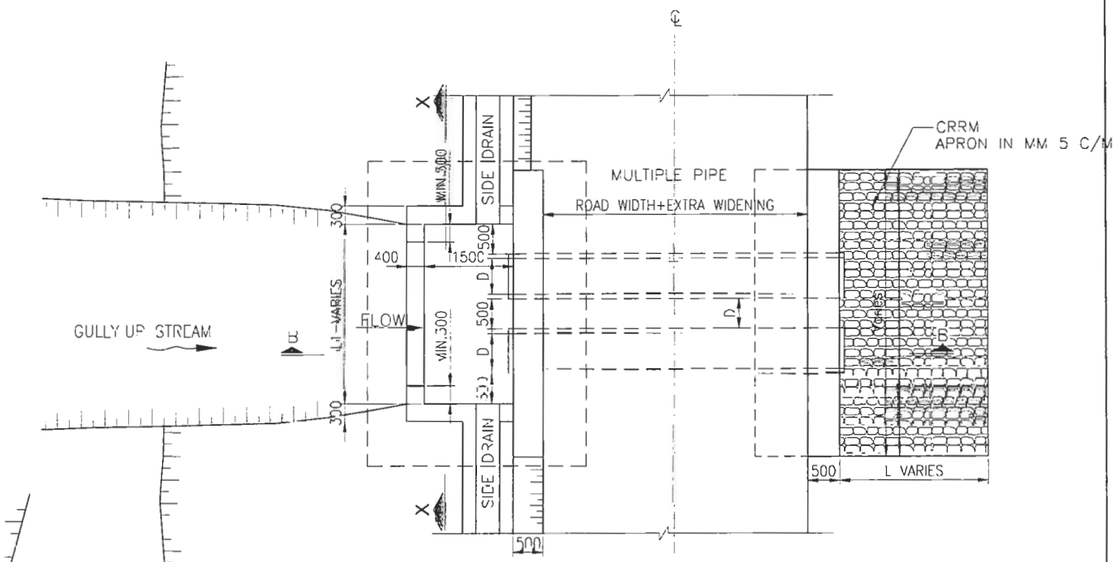


## PLAN

INLET TYPE- B (DOUBLE CELL WITH CATCHPIT)

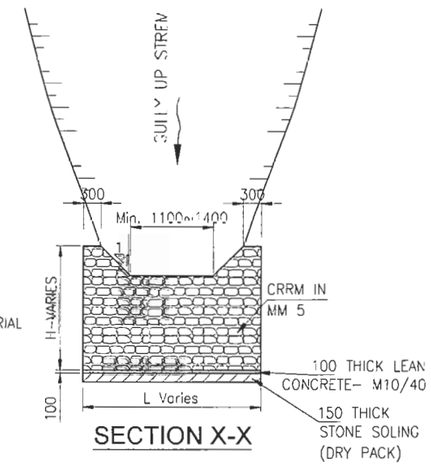


## SECTION X-X

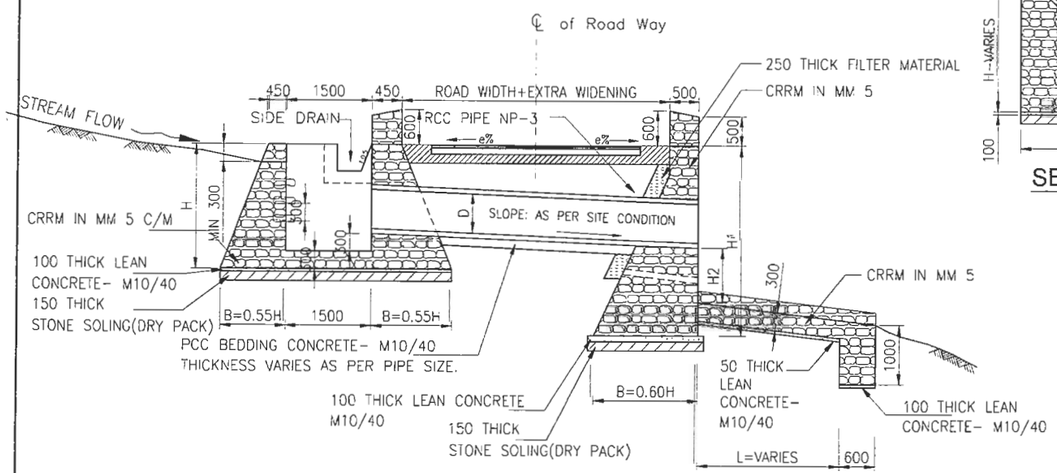


## SECTION A-A

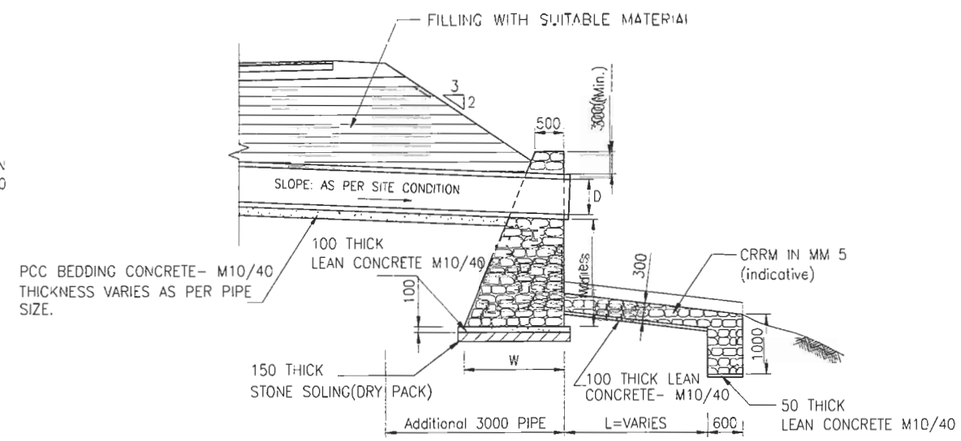


## ALTERNATIVE OUTLET IN EMBANKMENT FILLING

NOTES:

1. D=Inside diametre of pipe.
2. USE RCC pipe NP-3, D=Varies
3. Height of structures H, H1 & H2 varies as per site condition.
4. Stone masonry Apron slope varies as per site condition.
5. All the dimensions are in millimetres unless otherwise mentioned.

| EMPLOYER | PROJECT | DESIGN CONSULTANT | | | | | | |
|---|---|---|---|---|---|---|---|---|
| Government of Nepal<br>Ministry of Physical Infrastructure and Transport<br>**Department of Roads**<br>**Development Cooperation Implementation Division** | Nepal India Regional Trade and Transport Project (NIRTTP)<br>(IDA CREDIT No. 5273 - NEP)<br>Detailed Design for Improvement of Kathmandu (Nagdhunga) - Naubise - Mugling Road and Bridges | Intercontinental Consultants & Technocrats Pvt. Ltd.<br>A-8, Green Park, New Delhi - 110016<br>Ph : 4086-3000, Fax 2685-5252<br>In Joint Venture With<br>Soosung Engineering Co. Ltd., South Korea | In Association With<br>Full Bright Consultancy (Pvt.) Ltd.<br>316,Baburam Acharya Sadak<br>Sinamangal, Kathmandu, GPO Box: 4970, Kathmandu, Nepal | Designed By | SB | | **DRAWING NAME:**<br>TYPICAL PIPE CULVERT | **Scale:**<br>NOT TO SCALE |
| | | | | Checked By | PMS | | | **Date:**<br>August 2019 |
| | | | | Approved By | BNS | | | **Drawing No.:**<br>NNMR-TYP 05-02 |

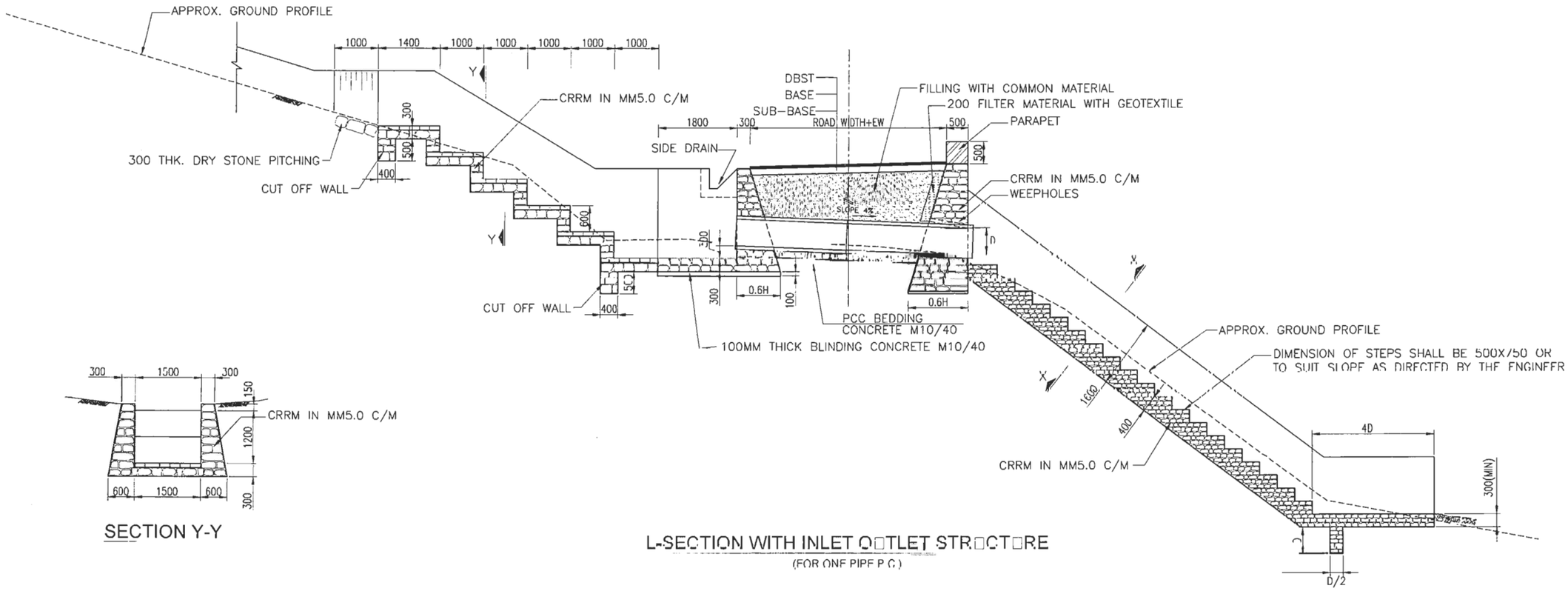


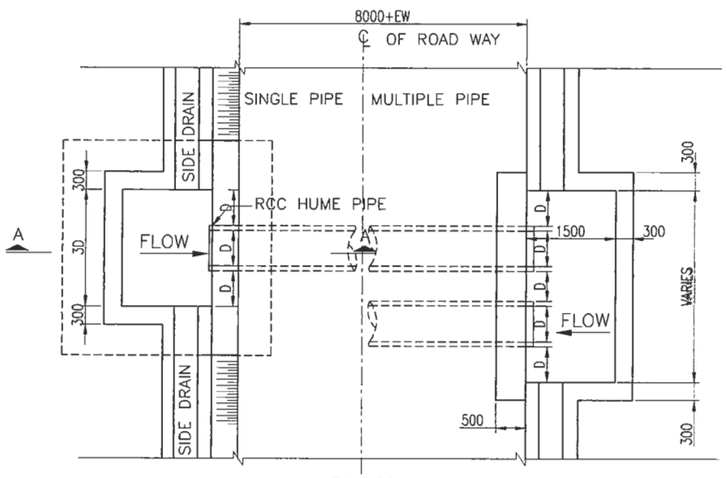


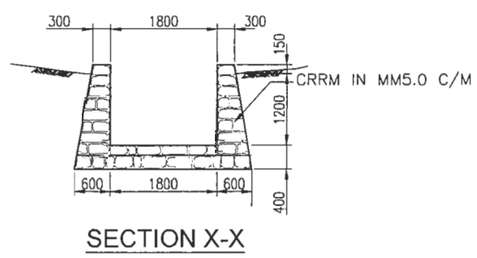


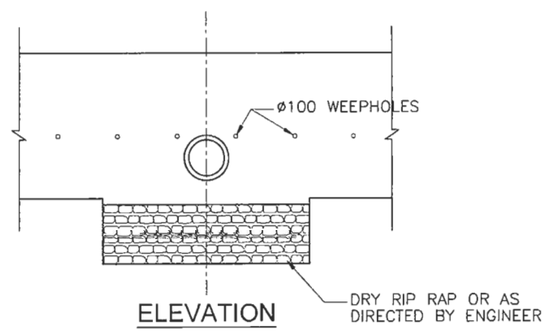


| EMPLOYER | PROJECT | DESIGN CONSULTANT | | | | | |
|---|---|---|---|---|---|---|---|
| Government of Nepal<br>Ministry of Physical Infrastructure and Transport<br>**Department of Roads**<br>**Development Cooperation Implementation Division** | Nepal India Regional Trade and Transport Project<br>(NIRTTP)<br>(IDA CREDIT No. 5273 - NEP)<br>Detailed Design for Improvement of Kathmandu (Nagdhunga) - Naubise - Mugling Road and Bridges | Intercontinental Consultants & Technocrats Pvt. Ltd.<br>A-8, Green Park, New Delhi - 110016<br>Ph : 4086-3000, Fax 2685-5252<br>In Joint Venture With<br>Soosung Engineering Co. Ltd., South Korea | In Association With<br>Full Bright Consultancy (Pvt.) Ltd.<br>316,Baburam Acharya Sadak<br>Sinamangal, Kathmandu, GPO<br>Box: 4970, Kathmandu, Nepal | Designed By<br>Checked By<br>Approved By | SB<br>PMS<br>BNS | **DRAWING NAME:**<br>TYPICAL PIPE CULVERT | **Scale:**<br>0.00 1.00 2.00 |

**Date:** August 2019

**Drawing No.:** NNMR-TYP 05-03

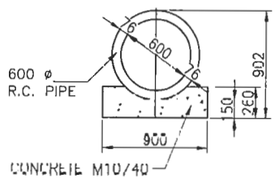


## PIPE CULVERT (Ø600)

WORK QUANTITIES (PER 10.0m)

| ITEM | UNIT | QUANTITY | REMARKS |
|---|---|---|---|
| R.C. PIPE (ø900) | m | 10.00 | NP3 |
| CONCRETE M10/40 | m3 | 1.92 | |
| FORM WORK | m2 | 5.2 | |
| EXCAVATION | m3 | 2.34 | |
| | | | |

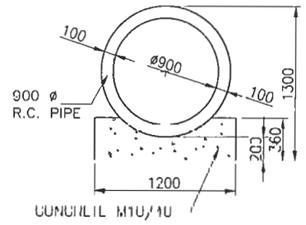


## PIPE CULVERT (Ø900)

WORK QUANTITIES (PER 10.0m)

| ITEM | UNIT | QUANTITY | REMARKS |
|---|---|---|---|
| R.C. PIPE (ø900) | m | 10.00 | NP3 |
| CONCRETE M10/40 | m3 | 3.46 | |
| FORM WORK | m2 | 7.20 | |
| EXCAVATION | m3 | 4.32 | |
| | | | |

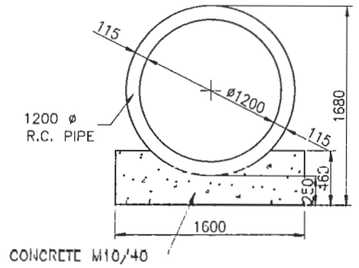


## PIPE CULVERT (Ø1200)

WORK QUANTITIES (PER 10.0m)

| ITEM | UNIT | QUANTITY | REMARKS |
|---|---|---|---|
| R.C. PIPE (ø1200) | m | 10.00 | NP3 |
| CONCRETE M10/40 | m3 | 5.89 | |
| FORM WORK | m2 | 9.20 | |
| EXCAVATION | m3 | 7.36 | |
| | | | |

## IRRIGATION CROSSING/LOOP DRAIN CROSSING

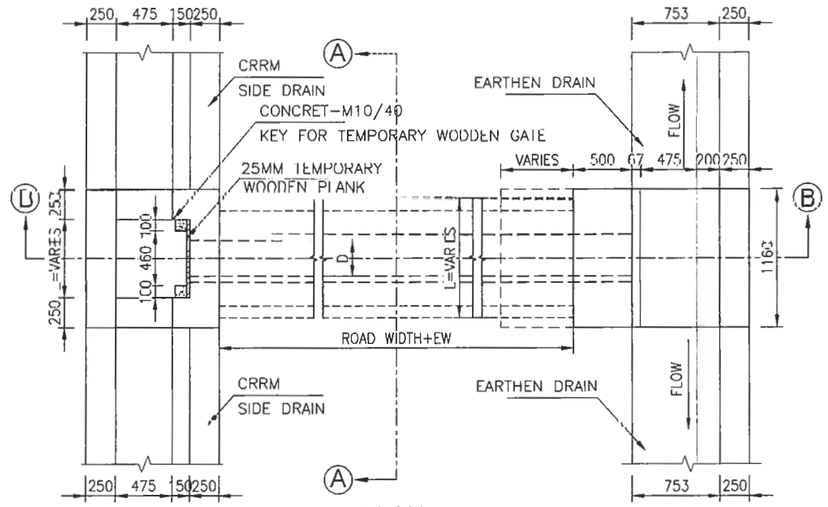


## PLAN

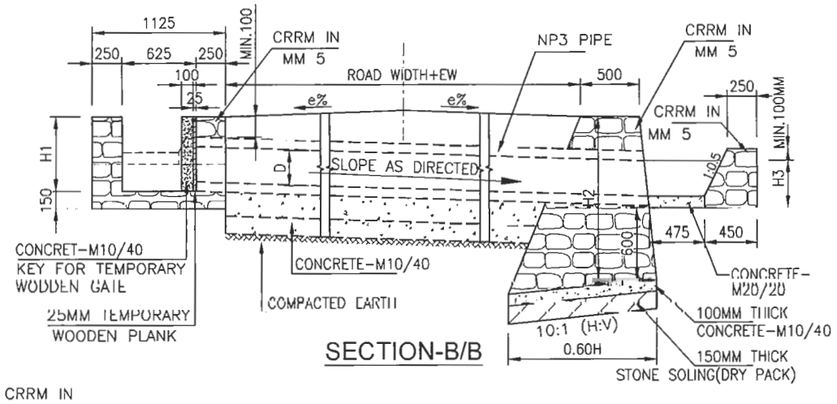


## SECTION-B/B

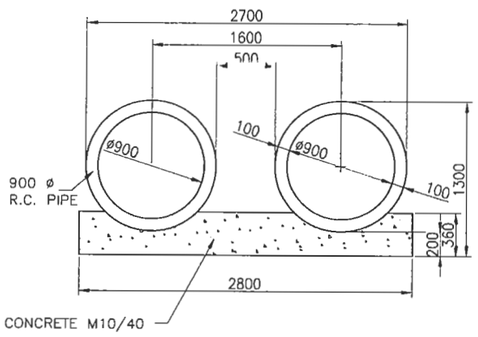


## PIPE CULVERT (2X900Ø)

WORK QUANTITIES (PER 10.0m)

| ITEM | UNIT | QUANTITY | REMARKS |
|---|---|---|---|
| R.C. PIPE (ø900) | m | 20.00 | NP3 |
| CONCRETE M10/40 | m3 | 8.36 | |
| FORM WORK | m2 | 7.20 | |
| EXCAVATION | m3 | 10.08 | |
| | | | |

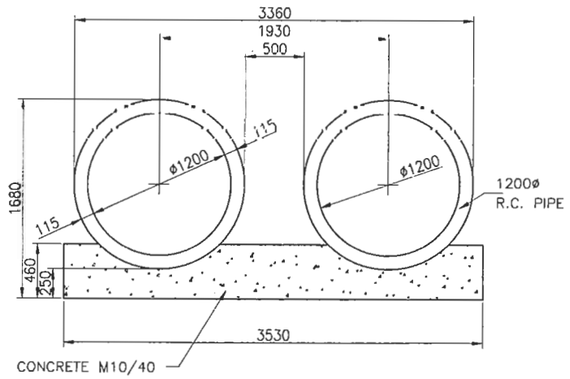


## PIPE CULVERT (2X1200Ø )

WORK QUANTITIES (PER 10.0m)

| ITEM | UNIT | QUANTITY | REMARKS |
|---|---|---|---|
| R.C. PIPE (ø1200) | m | 20.00 | NP3 |
| CONCRETE M10/40 | m3 | 13.62 | |
| FORM WORK | m2 | 9.20 | |
| EXCAVATION | m3 | 16.24 | |
| | | | |

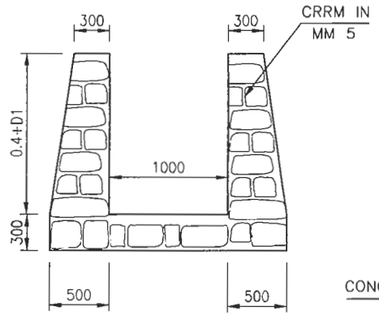


## OUTLET GUIDE CHANNEL

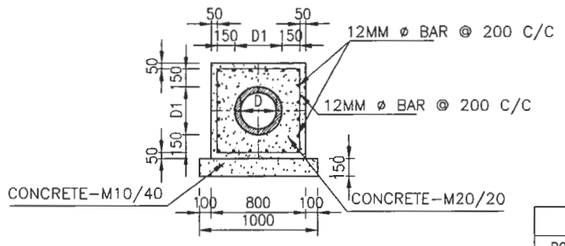


## SECTION-A/A

| ITEM | UNIT | DIAMETRE | REMARKS |
|---|---|---|---|
| RCC PIPE (D) | mm | 300 | NP3 |
| RCC PIPE (D) | mm | 600 | NP3 |
| RCC PIPE (D) | mm | 450 | NP3 |

NOTES:

1. All DIMENSIONS ARE IN MILLIMETRES UNLESS OTHERWISE MENTIONED.
1. D & D1 = INNER & OUTER DIAMETRE OF PIPE

| EMPLOYER | PROJECT | DESIGN CONSULTANT | | | | | |
|---|---|---|---|---|---|---|---|
| Government of Nepal<br>Ministry of Physical Infrastructure and Transport<br>Department of Roads<br>Development Cooperation Implementation Division | Nepal India Regional Trade and Transport Project (NIRTTP)<br>(IDA CREDIT No. 5273 - NEP)<br>Detailed Design for Improvement of Kathmandu (Nagdhunga) - Naubise - Mugling Road and Bridges | Intercontinental Consultants & Technocrats Pvt. Ltd.<br>A-8, Green Park, New Delhi - 110016<br>Ph : 4086-3000, Fax 2685-5252<br>In Joint Venture With<br>Soosung Engineering Co. Ltd., South Korea | In Association With<br>Full Bright Consultancy (Pvt.) Ltd.<br>316,Baburam Acharya Sadak<br>Sinamangal, Kathmandu, GPO<br>Box: 4970, Kathmandu, Nepal | Designed By<br>Checked By<br>Approved By | SB<br>PMS<br>BNS | DRAWING NAME:<br>TYPICAL PIPE CULVERT | Scale: | Date:<br>August 2019<br>Drawing No.:<br>NNMR-TYP 05-04 |

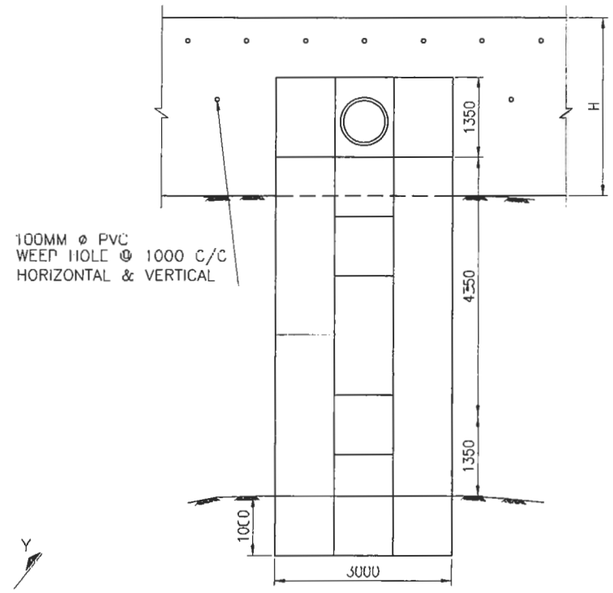


CASCADE ELEVATION

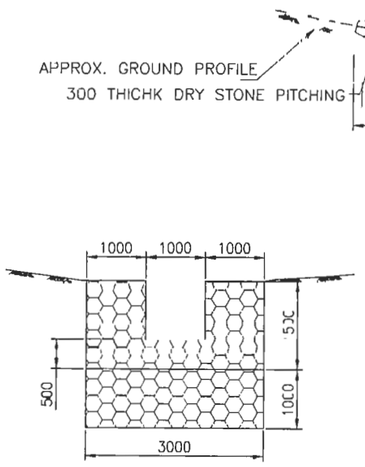


SECTION X-X

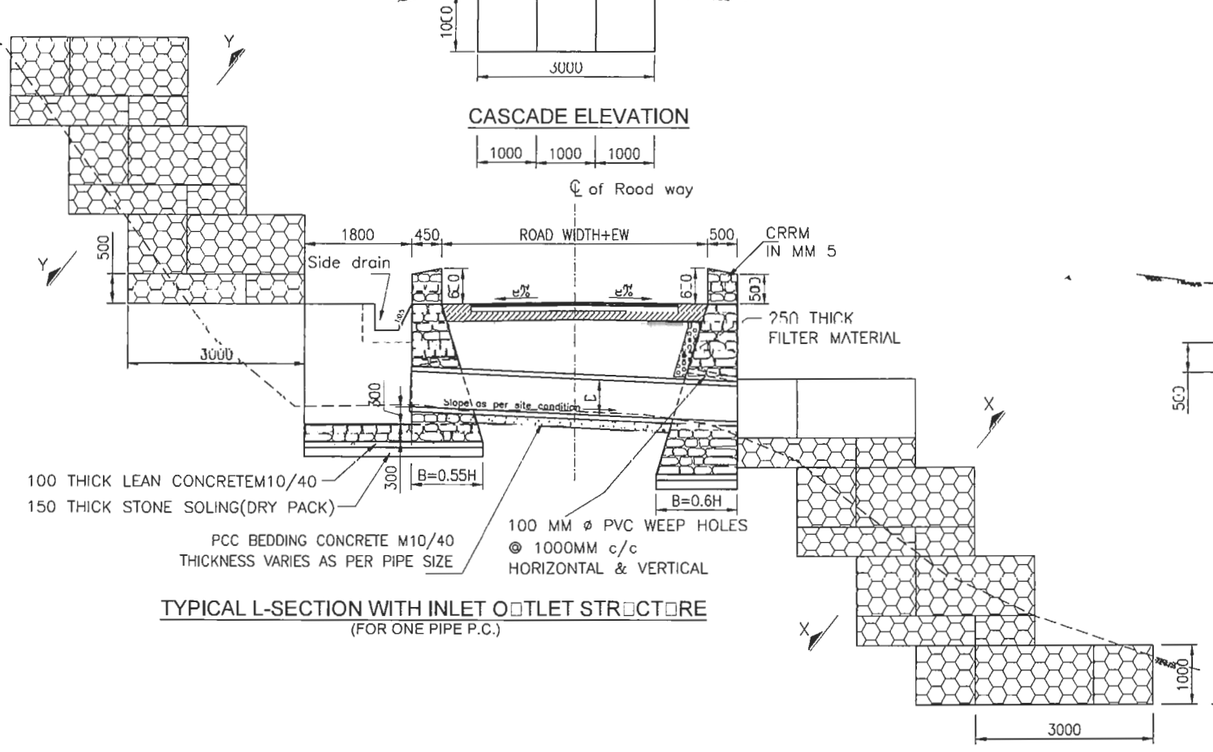


TYPICAL L-SECTION WITH INLET O□TLET STR□CT□RE
(FOR ONE PIPE P.C.)

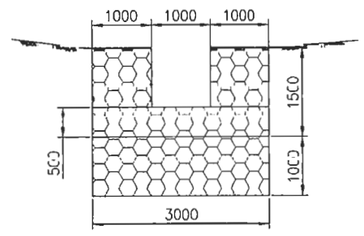


SECTION Y-Y

NOTES:

1. D Inside diametre of pipe.
2. Si es of various components of sections X-X and Y-Y depends on discharge at site.
3. Cascades are used for direct flow over short stretches of very steep erodible gully slope.
4. Height of structures H, H1 & H2 varies as per site condition.
5. All the dimensions are in millimetres unless otherwise mentioned.

| EMPLOYER | PROJECT | DESIGN CONSULTANT | | | | DRAWING NAME: | Scale: | Date: |
|---|---|---|---|---|---|---|---|---|
| Government of Nepal<br>Ministry of Physical Infrastructure and Transport<br>**Department of Roads**<br>**Development Cooperation Implementation Division** | Nepal India Regional Trade and Transport Project<br>(NIRTTP)<br>(IDA CREDIT No. 5273 - NEP)<br>Detailed Design for Improvement of Kathmandu (Nagdhunga) - Naubise - Mugling Road and Bridges | Intercontinental Consultants & Technocrats Pvt. Ltd.<br>A-8, Green Park, New Delhi - 110016<br>Ph : 4086-3000, Fax 2685-5252<br>In Joint Venture With<br>Soosung Engineering Co. Ltd., South Korea | In Association With<br>Full Bright Consultancy (Pvt.) Ltd.<br>316,Baburam Acharya Sadak<br>Sinamangal, Kathmandu, GPO Box: 4970, Kathmandu, Nepal | Designed By | SB | | GABION CASCADE | August 2019 |
| | | | | Checked By | PMS | | NOT TO SCALE | **Drawing No.:** |
| | | | | Approved By | BNS | | | NNMR-TYP 05 -05 |

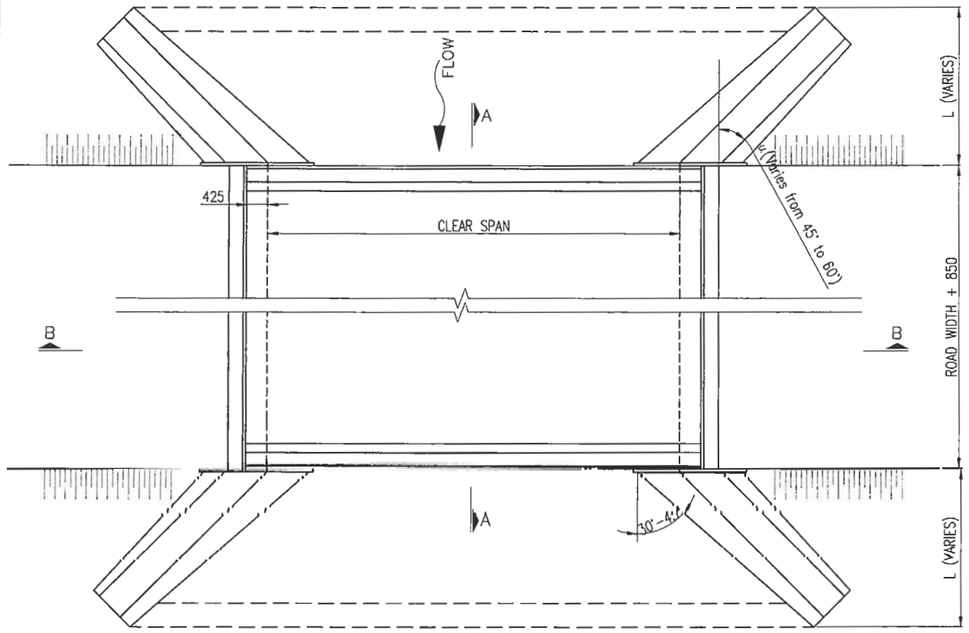


PLAN

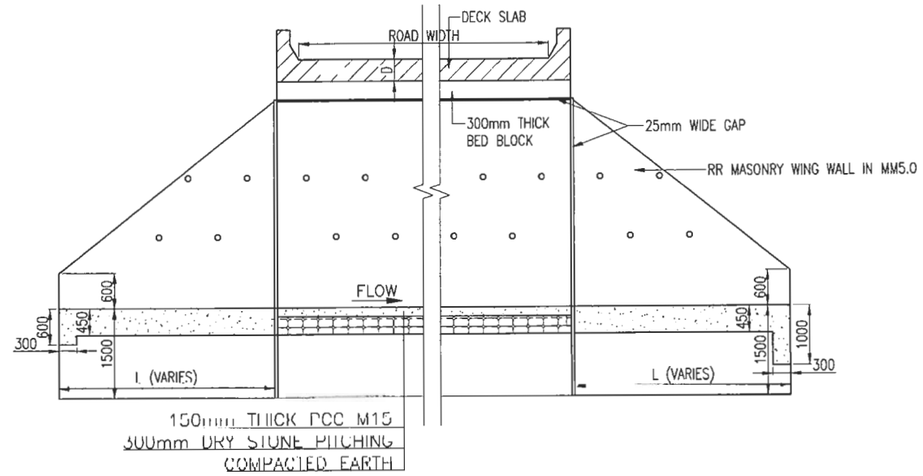


SECTION A - A

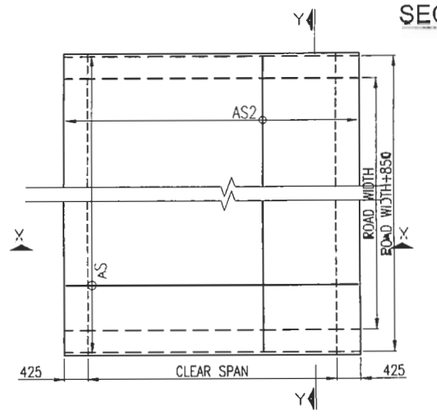


REINFORCEMENT PLAN

| DETAILS OF SLAB CULVERT (WITHOUT FOOT PATH) | | | | | | | |
|---|---|---|---|---|---|---|---|
| CLEAR SPAN (mm) | OVERALL DEPTH (D) (mm) | MIN. OVERALL LENGTH (m) | REINFORCEMENT | | | | REMARKS |
| | | | ALONG SPAN (AS1) | ACROSS SPAN (AS2) | ALONG SPAN (AS3) | ACROSS SPAN (AS4) | |
| 1.50 | 250 | 2.15 | 16ø @ 200 C/C | 8ø @ 75 C/C | 8ø @ 150 C/C | 8ø @ 150 C/C | MIN. WIDTH OF EXPANSION JCNT = 18mm |
| 2.00 | 290 | 2.65 | 16ø @ 175 C/C | 8ø @ 75 C/C | 8ø @ 150 C/C | 8ø @ 150 C/C | |
| 3.00 | 310 | 3.65 | 16ø @ 150 C/C | 8ø @ 75 C/C | 8ø @ 150 C/C | 8ø @ 150 C/C | |
| 4.00 | 380 | 4.65 | 20ø @ 175 C/C | 8ø @ 75 C/C | 8ø @ 150 C/C | 8ø @ 150 C/C | |
| 5.00 | 440 | 5.85 | 20ø @ 150 C/C | 8ø @ 75 C/C | 8ø @ 150 C/C | 8ø @ 150 C/C | |
| 6.00 | 500 | 6.85 | 20ø @ 120 C/C | 8ø @ 75 C/C | 8ø @ 150 C/C | 8ø @ 150 C/C | |

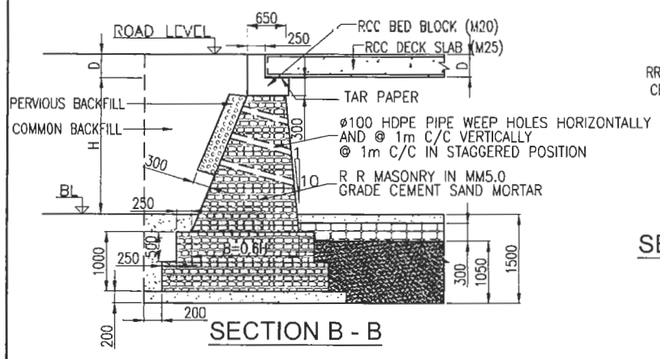


SECTION B - B

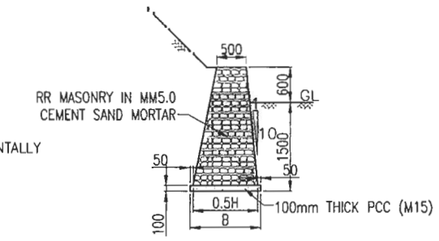


SECTION OF WING WALL AT LOW END

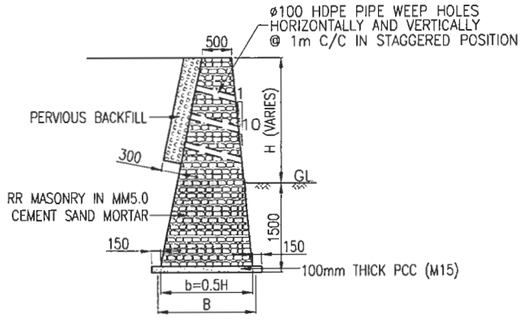


SECTION OF WING WALL AT HIGH END

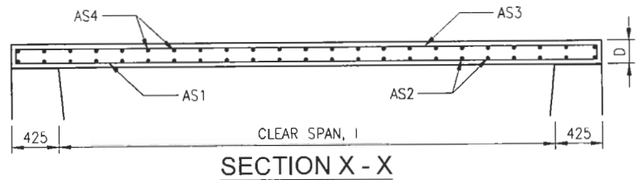


SECTION X - X

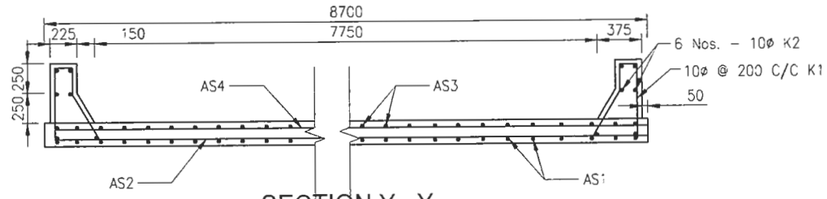


SECTION Y - Y

NOTE:

1. THIS DRAWING SHOULD BE READ IN CONJUNCTION WITH OTHER RELEVANT DRAWINGS.
2. CONCRETE GRADE IS M25 IN DECK SLAB.
3. STEEL REINFORCEMENT IS HYSD, GRADE Fe415 CONFIRMING TO IS:1786 OR IS:1139.
4. MINIMUM LAP SHOULD BE 40ø OF BAR.
5. CLEAR COVER, TOP AND BOTTOM: 25mm, AT THE END OF REINFORMCEMENT: 50mm.
6. ALL DIMENSIONS ARE IN MILLIMETER UNLESS OTHERWISE STATED.
7. WIDTH OF BEARING IS 425mm FOR L>=5m, 325mm FOR L<5m.

| EMPLOYER | PROJECT | DESIGN CONSULTANT | | | | | |
|---|---|---|---|---|---|---|---|
| Government of Nepal<br>Ministry of Physical Infrastructure and Transport<br>**Department of Roads**<br>**Development Cooperation Implementation Division** | Nepal India Regional Trade and Transport Project<br>(NIRTTP)<br>(IDA CREDIT No. 5273 - NEP)<br>Detailed Design for Improvement of Kathmandu (Nagdhunga) - Naubise - Mugling Road and Bridges | Intercontinental Consultants & Technocrats Pvt. Ltd.<br>A-8, Green Park, New Delhi - 110016<br>Ph : 4086-3000, Fax 2685-5252<br>In Joint Venture With<br>Soosung Engineering Co. Ltd., South Korea | In Association With<br>Full Bright Consultancy (Pvt.) Ltd.<br>316,Baburam Acharya Sadak<br>Sinamangal, Kathmandu, GPO Box: 4970, Kathmandu, Nepal | Designed By | SB | **DRAWING NAME:**<br>TYPICAL SLAB CULVERT | **Scale:**<br>0.00 1.00 2.00 |
| | | | | Checked By | PMS | | **Date:**<br>August 2019 |
| | | | | Approved By | BNS | | **Drawing No.:**<br>NNMR-TYP 05-06 |

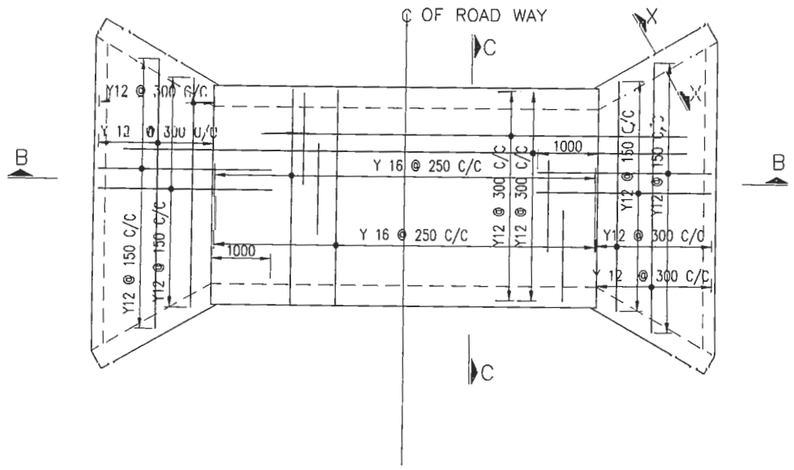


PLAN OF CULVERT BASE
SCALE 1:100

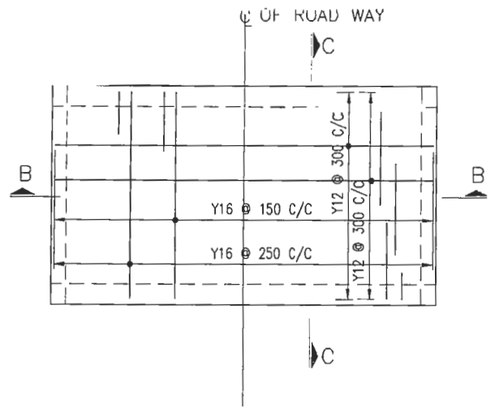


PLAN OF CULVERT TOP SLAB
SCALE 1:100

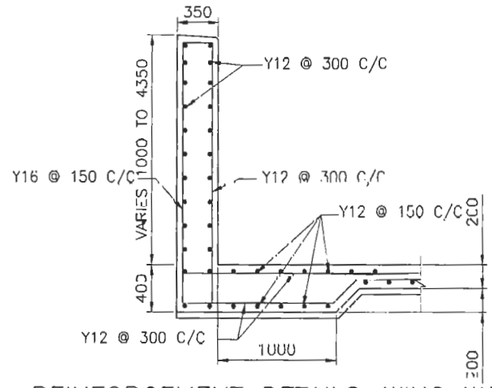


REINFORCEMENT DETAILS–WING WALLS
(SECTION AT X–X)
SCALE 1:50

NOTES:

1. All Reinforcement to be High Yield Deformed steel bars Grade 415 to IS 1786.
2. Minimum reinforcement cover is 50mm except to surfaces exposed to ground or fill where cover is 75mm.
3. Location and length of spliced laps to be
4. All dimensions in millimeters unless noted otherwise.

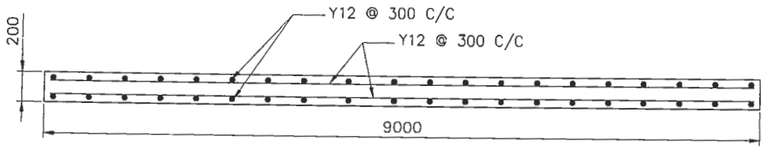


SECTION D–D
SCALE 1:50

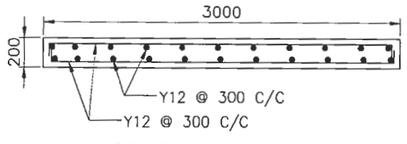


SECTION E–E
SCALE 1:50

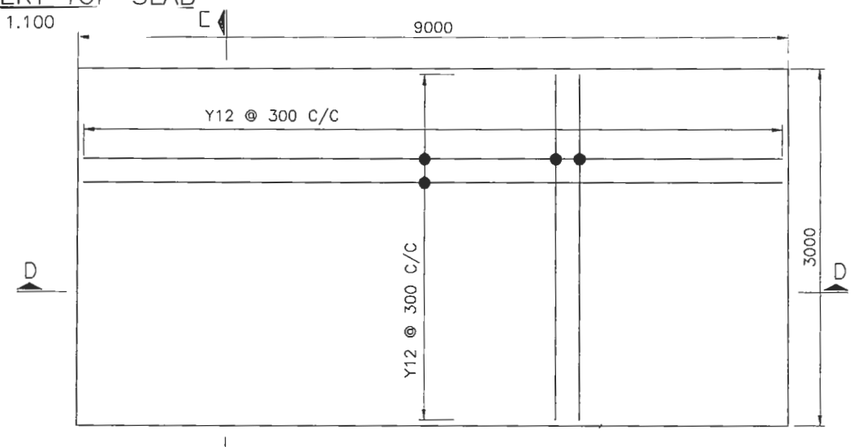


APPROACH SLAB
(REINFORCEMENT DETAILS)
SCALE 1:50

| EMPLOYER | PROJECT | DESIGN CONSULTANT | | | | | | |
|---|---|---|---|---|---|---|---|---|
| Government of Nepal<br>Ministry of Physical Infrastructure and Transport<br>**Department of Roads**<br>**Development Cooperation Implementation Division** | Nepal India Regional Trade and Transport Project (NIRTTP)<br>(IDA CREDIT No. 5273 - NEP)<br>Detailed Design for Improvement of Kathmandu (Nagdhunga) - Naubise - Mugling Road and Bridges | Intercontinental Consultants & Technocrats Pvt. Ltd.<br>A-8, Green Park, New Delhi - 110016<br>Ph : 4086-3000, Fax 2685-5252<br>In Joint Venture With<br>Soosung Engineering Co. Ltd., South Korea | In Association With<br>Full Bright Consultancy (Pvt.) Ltd.<br>316,Baburam Acharya Sadak<br>Sinamangal, Kathmandu, GPO Box: 4970, Kathmandu, Nepal | Designed By | SB | | **DRAWING NAME:**<br>SINGLE CELL BOX CULVERT REINFORCEMENT DETAILS (3.0mX3.0mX1) | **Scale:**<br>AS SHOWN | **Date:**<br>August 2019 |
| | | | | Checked By | PMS | | | | **Drawing No.:**<br>NNMR-TYP 05-09 |
| | | | | Approved By | BNS | | | | |

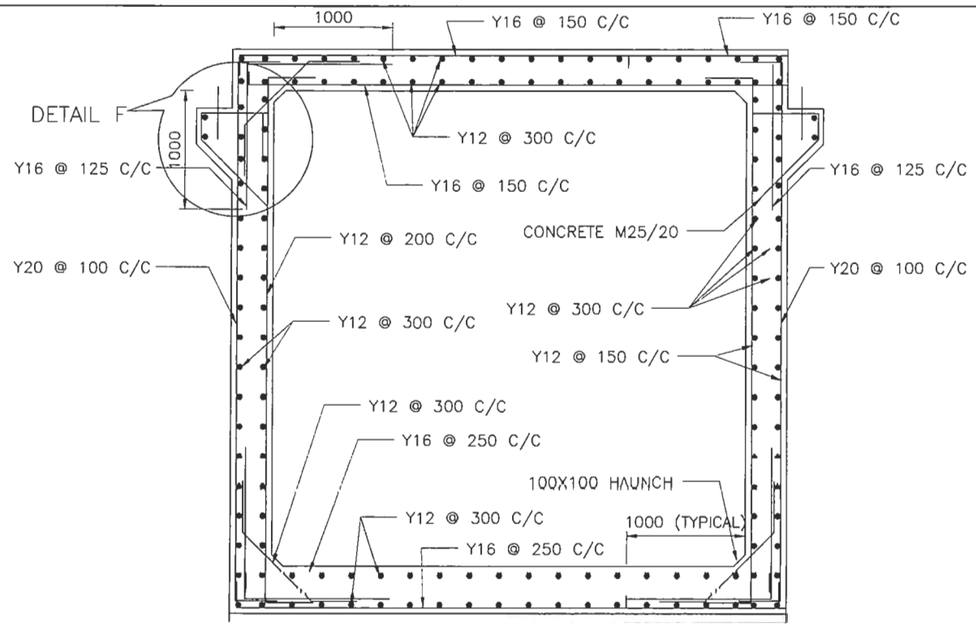


SECTIONAL ELEVATION AT C–C
RCC BOX CULVERT
SCALE 1:50

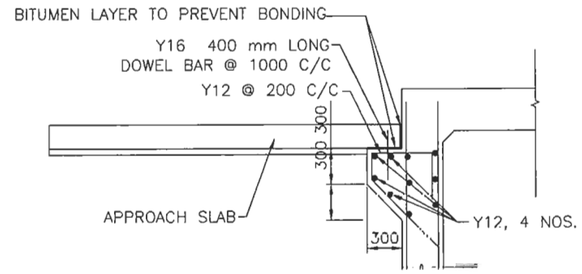


DETAIL F
SCALE 1:50

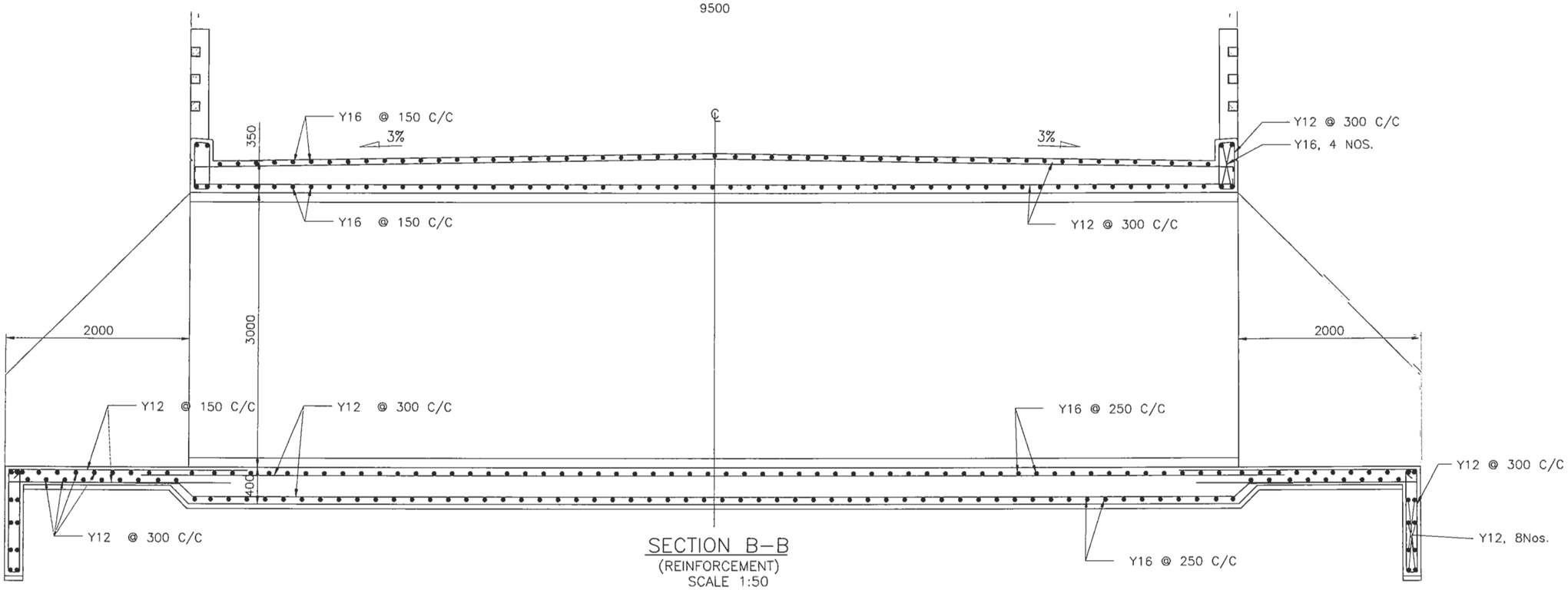


SECTION B–B
(REINFORCEMENT)
SCALE 1:50

| EMPLOYER | PROJECT | DESIGN CONSULTANT | | | | | |
|---|---|---|---|---|---|---|---|
| Government of Nepal<br>Ministry of Physical Infrastructure and Transport<br>**Department of Roads**<br>**Development Cooperation Implementation Division** | Nepal India Regional Trade and Transport Project (NIRTTP)<br>(IDA CREDIT No. 5273 - NEP)<br>Detailed Design for Improvement of Kathmandu (Nagdhunga) - Naubise - Mugling Road and Bridges | Intercontinental Consultants & Technocrats Pvt. Ltd.<br>A-8, Green Park, New Delhi - 110016<br>Ph : 4086-3000, Fax 2685-5252<br>In Joint Venture With<br>Soosung Engineering Co. Ltd., South Korea | In Association With<br>Full Bright Consultancy (Pvt.) Ltd.<br>316,Baburam Acharya Sadak<br>Sinamangal, Kathmandu, GPO Box: 4970, Kathmandu, Nepal | Designed By | SB | | **DRAWING NAME:**<br>SINGLE CELL BOX CULVERT REINFORCEMENT DETAILS<br>(3.0mX3.0mX1) |
| | | | | Checked By | PMS | | |
| | | | | Approved By | BNS | | |

| Scale: | Date: |
|---|---|
| AS SHOWN | August 2019 |
| | **Drawing No.:** NNMR-TYP 05-10 |

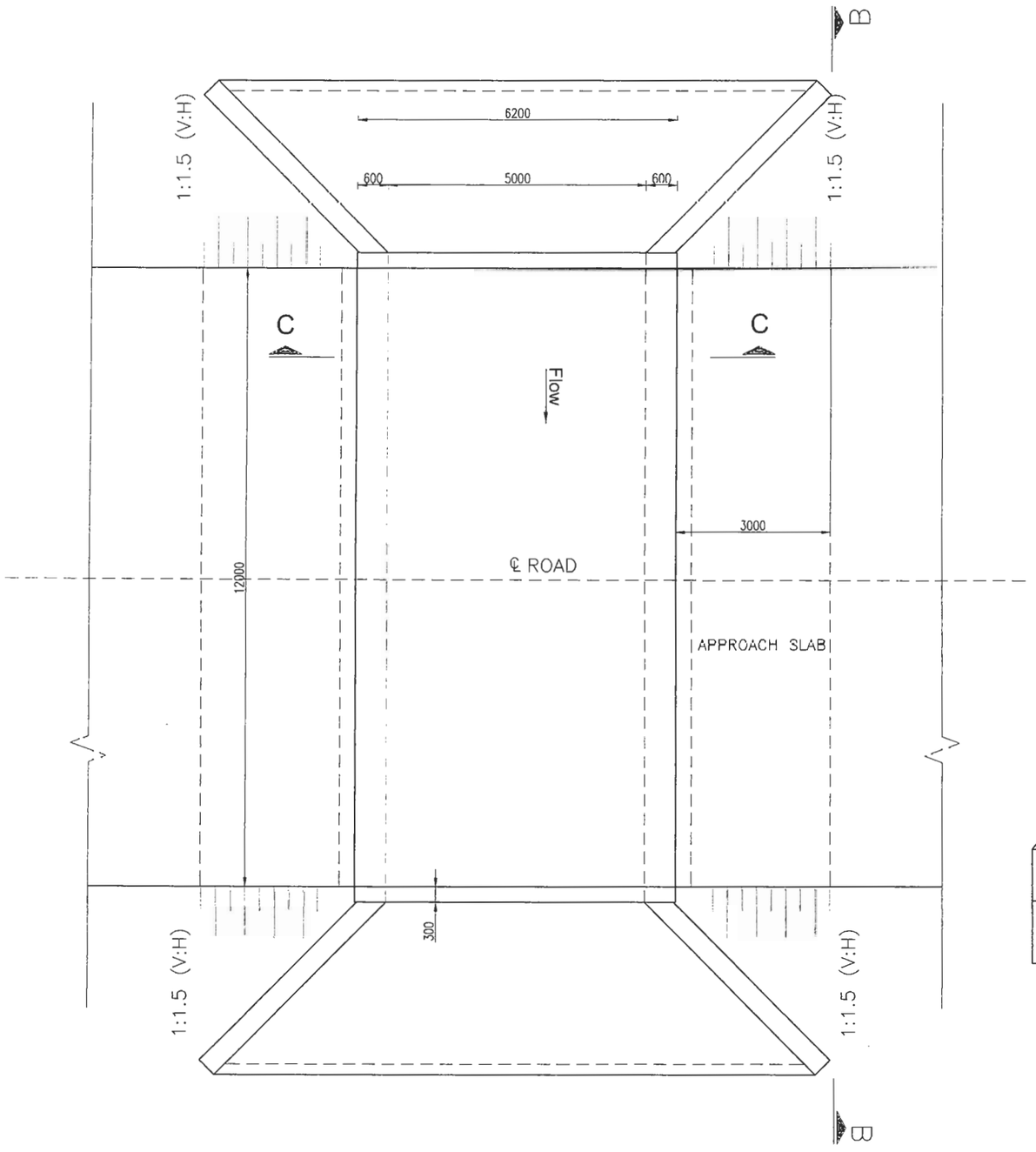


PLAN

SCALE 1:100

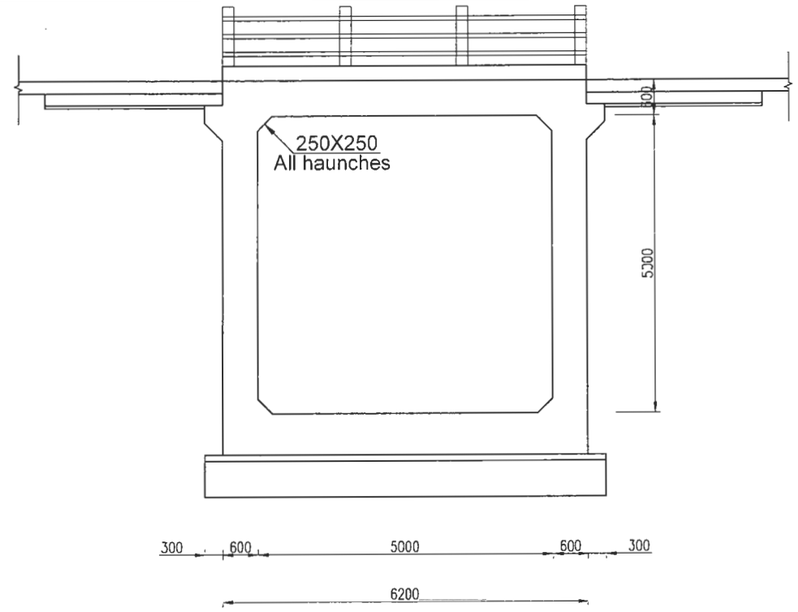


SECTION C–C

SCALE 1:100

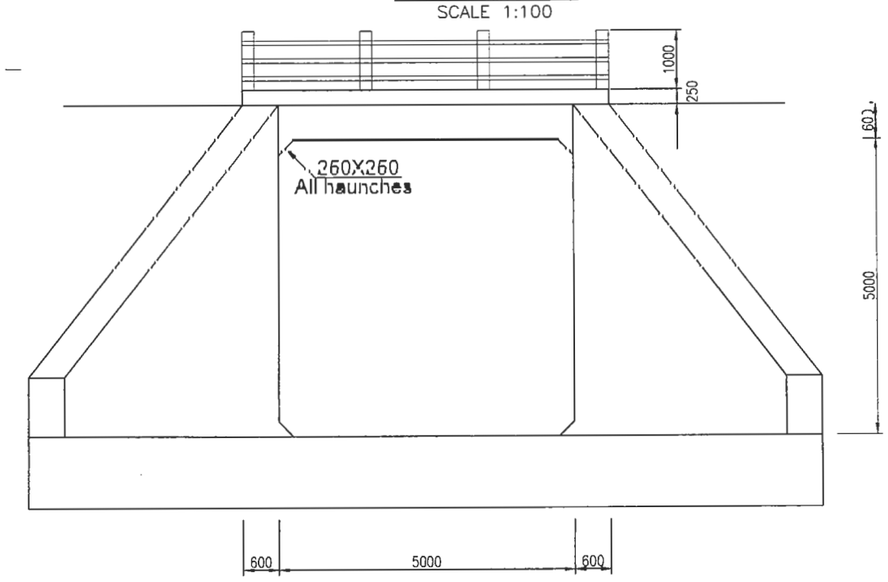


FRONT ELEVATION

SCALE 1:100

NOTES:

1. All Concrete is Grade M25/20 except M15/20 to Approach Slab and Blinding.
2. Proposed construction joints to be submitted for Engineers approval.
3. Wing Walls and Apron Slab to be cast monolithic with Box Culvert.
4. Setting out of Culvert to be checked and approved by Engineer.
5. Any adjustments to suit field conditions to be as directed by Engineer.
6. All exposed corners to be chamfered at 25x25mm.
7. All dimensions in millimeters unless noted otherwise.
8. Railing provided should be according to typical drawing of culvert & bridge RC guardrail. Spacing of railing must be adjusted to suit total length of Box Culvert .

| EMPLOYER | PROJECT | DESIGN CONSULTANT | | | | | | |
|---|---|---|---|---|---|---|---|---|
| Government of Nepal<br>Ministry of Physical Infrastructure and Transport<br>**Department of Roads**<br>**Development Cooperation Implementation Division** | Nepal India Regional Trade and Transport Project (NIRTTP)<br>(IDA CREDIT No. 5273 - NEP)<br>Detailed Design for Improvement of Kathmandu (Nagdhunga) - Naubise - Mugling Road and Bridges | Intercontinental Consultants & Technocrats Pvt. Ltd.<br>A-8, Green Park, New Delhi - 110016<br>Ph : 4086-3000, Fax 2685-5252<br>In Joint Venture With<br>Soosung Engineering Co. Ltd., South Korea | FBC | In Association With<br>Full Bright Consultancy (Pvt.) Ltd.<br>316,Baburam Acharya Sadak<br>Sinamangal, Kathmandu, GPO<br>Box: 4970, Kathmandu, Nepal | Designed By | SB | **DRAWING NAME:**<br>SINGLE CELL BOX CULVERT GENERAL ARRANGEMENT (5.0mX5.0mX1) | **Scale:**<br>AS SHOWN |
| | | | | | Checked By | PMS | | **Date:**<br>August 2019 |
| | | | | | Approved By | BNS | | **Drawing No.:**<br>NNMR-TYP 05-11 |

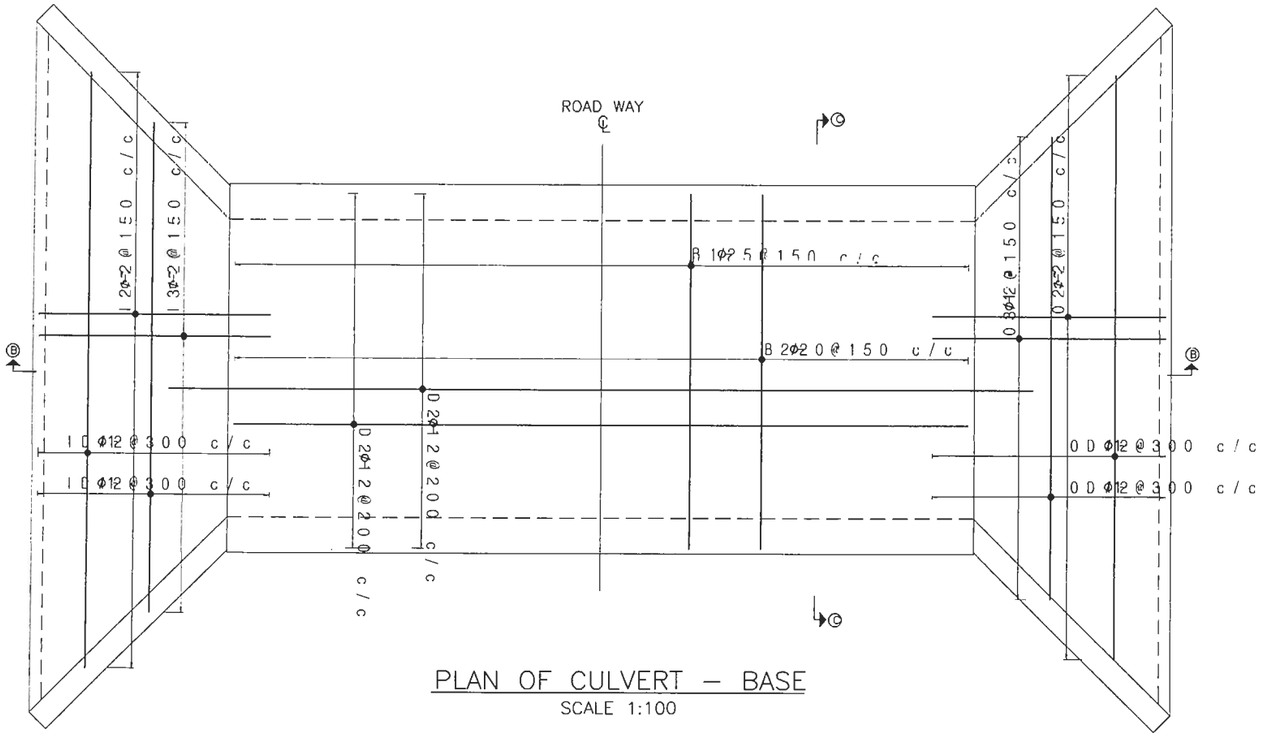


PLAN OF CULVERT – BASE

SCALE 1:100

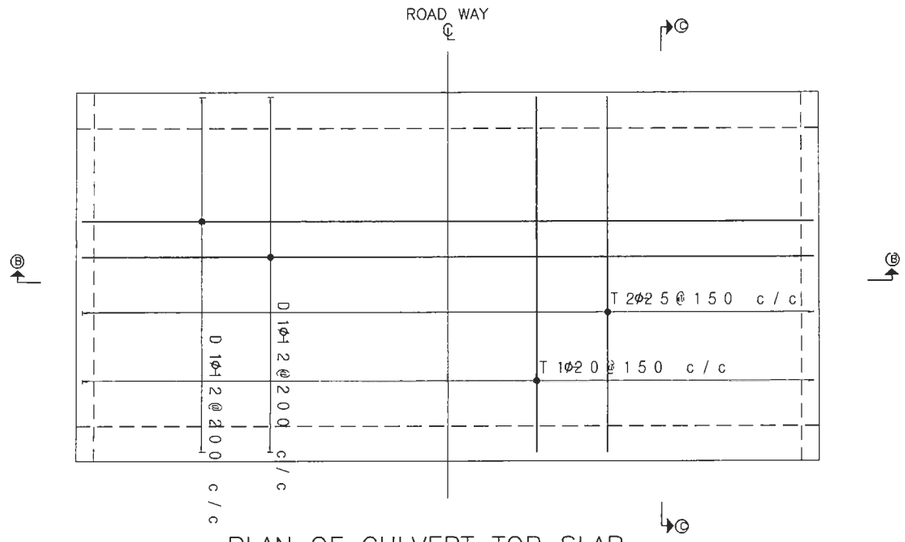


PLAN OF CULVERT TOP SLAB

SCALE 1:100

NOTES:

1. All Reinforcement to be High Yield Deformed steel bars Grade 415 to IS 1786.
2. Minimum reinforcement cover is 50mm except to surfaces exposed to ground or fill where cover is 75mm
3. Location and length of spliced laps to be
4. All dimensions in millimeters unless noted otherwise.

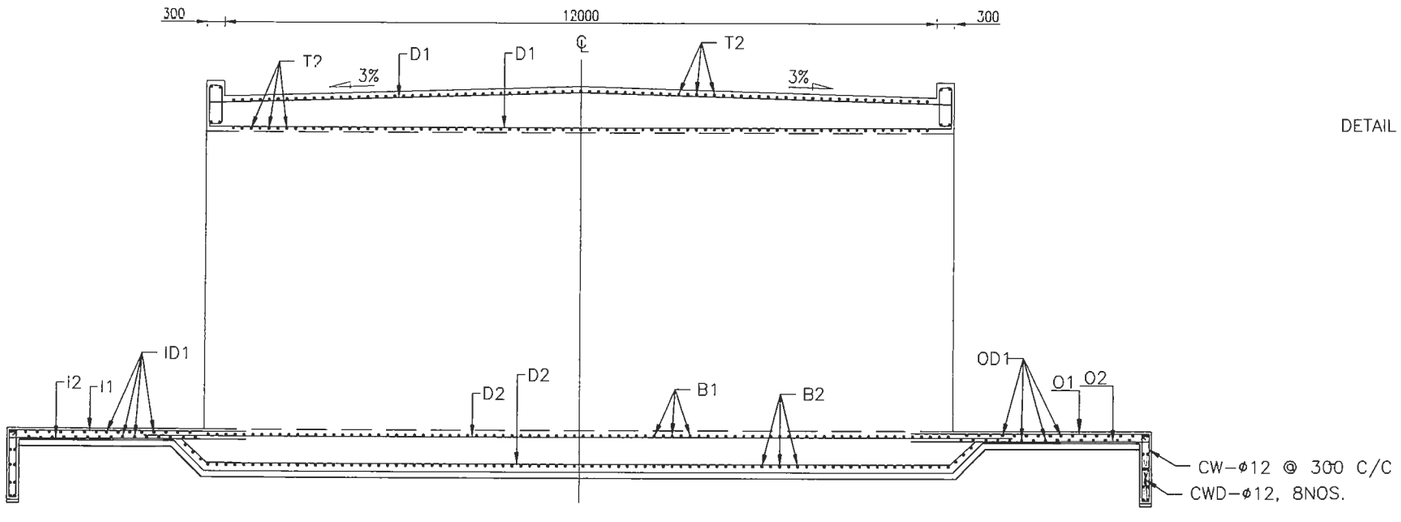


SECTIONAL ELEVATION AT B–B

SCALE 1:100

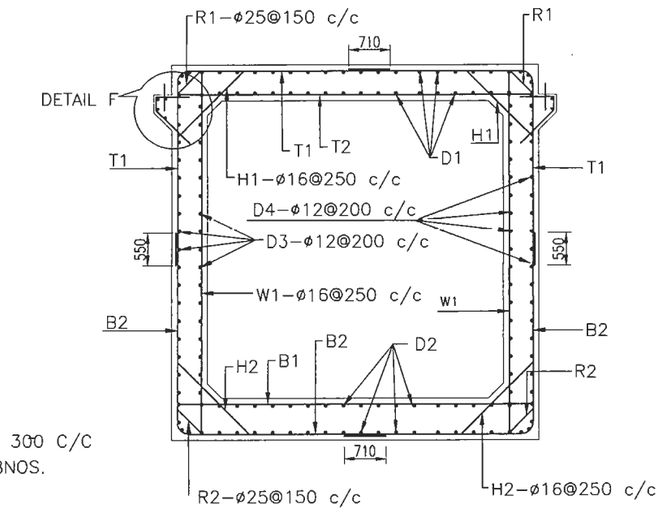


SECTIONAL ELEVATION AT C–C

SCALE 1:100

| EMPLOYER | PROJECT | DESIGN CONSULTANT | | | | | | |
|---|---|---|---|---|---|---|---|---|
| Government of Nepal<br>Ministry of Physical Infrastructure and Transport<br>**Department of Roads**<br>**Development Cooperation Implementation Division** | Nepal India Regional Trade and Transport Project (NIRTTP)<br>(IDA CREDIT No. 5273 - NEP)<br>Detailed Design for Improvement of Kathmandu (Nagdhunga) - Naubise - Mugling Road and Bridges | Intercontinental Consultants & Technocrats Pvt. Ltd.<br>A-8, Green Park, New Delhi - 110016<br>Ph : 4086-3000, Fax 2685-5252<br>In Joint Venture With<br>Soosung Engineering Co. Ltd., South Korea | In Association With<br>Full Bright Consultancy (Pvt.) Ltd.<br>316,Baburam Acharya Sadak<br>Sinamangal, Kathmandu, GPO Box: 4970, Kathmandu, Nepal | Designed By | SB | | **DRAWING NAME:**<br>SINGLE CELL BOX CULVERT REINFORCEMENT DETAILS<br>(5.0mX5.0mX1) | **Scale:**<br>AS SHOWN | **Date:**<br>August 2019 |
| | | | | Checked By | PMS | | | | **Drawing No.:**<br>NNMR-TYP 05-12 |
| | | | | Approved By | BNS | | | | |

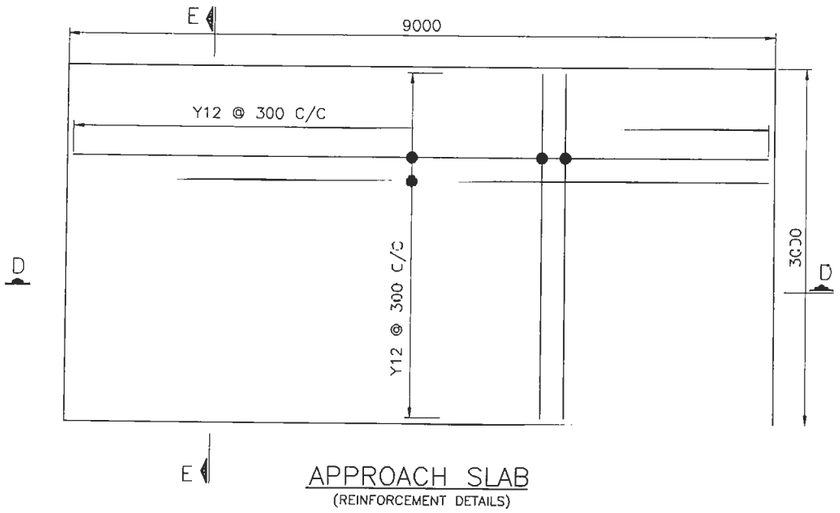


APPROACH SLAB
(REINFORCEMENT DETAILS)

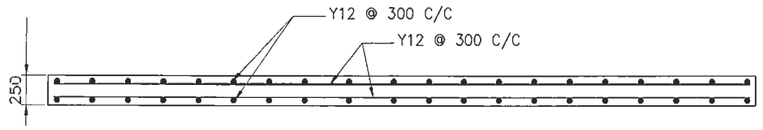


SECTION D–D

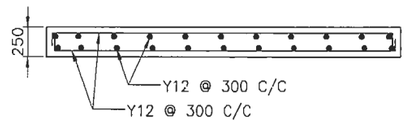


SECTION E–E

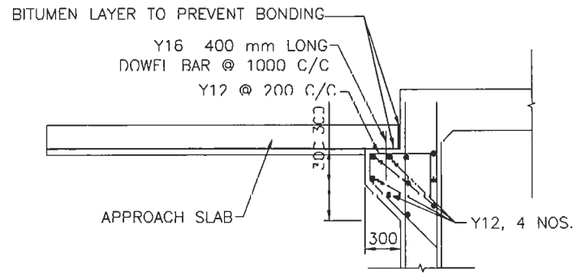


DETAIL F

NOTES:

1. All Concrete is Grade M30/20 except M15/20 to Approach Slab and Blinding.
2. Proposed construction joints to be submitted for Engineers approval.
3. Wing Walls and Apron Slab to be cast monolithic with Box Culvert.
4. Setting out of Culvert to be checked and approved by Engineer.
5. Any adjustments to suit field conditions to be as directed by Engineer.
6. All exposed corners to be chamfered at 25x25mm.
7. All dimensions in millimeters unless noted otherwise.
8. Railing provided should be according to typical drawing of culvert & bridge RC guardrail. Spacing of railing must be adjusted to suit total length of Box Culvert .
9. All Reinforcement to be High Yield Deformed steel bars Grade 415 to IS 1786.
10. Minimum reinforcement cover is 50mm except to surfaces exposed to ground or fill where cover is 75mm.
11. Location and length of spliced laps to be
12. All dimensions in millimeters unless noted otherwise.

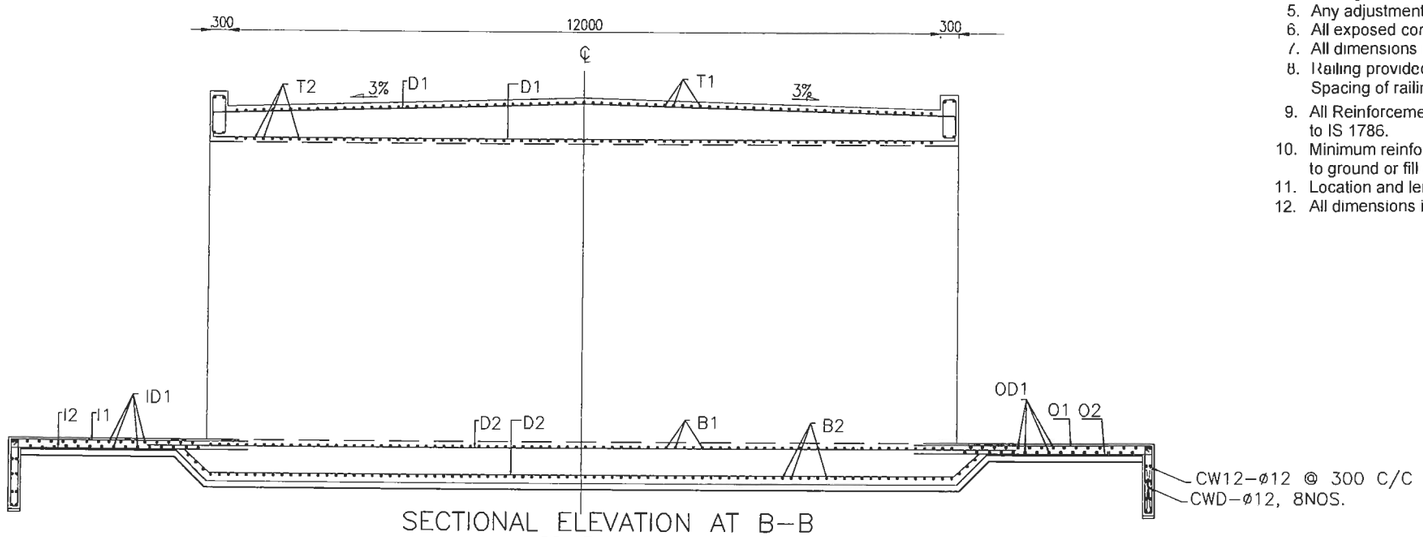


SECTIONAL ELEVATION AT B–B
SCALE 1:100

| EMPLOYER | PROJECT | DESIGN CONSULTANT | | | | | |
|---|---|---|---|---|---|---|---|
| Government of Nepal<br>Ministry of Physical Infrastructure and Transport<br>**Department of Roads**<br>**Development Cooperation Implementation Division** | Nepal India Regional Trade and Transport Project<br>(NIRTTP)<br>(IDA CREDIT No. 5273 - NEP)<br>Detailed Design for Improvement of Kathmandu (Nagdhunga) - Naubise - Mugling Road and Bridges | Intercontinental Consultants & Technocrats Pvt. Ltd.<br>A-8, Green Park, New Delhi - 110016<br>Ph : 4086-3000, Fax 2685-5252<br>In Joint Venture With<br>Soosung Engineering Co. Ltd., South Korea | In Association With<br>Full Bright Consultancy (Pvt.) Ltd.<br>316,Baburam Acharya Sadak<br>Sinamangal, Kathmandu, GPO<br>Box: 4970, Kathmandu, Nepal | Designed By | SB | | **DRAWING NAME:**<br>SINGLE CELL BOX CULVERT REINFORCEMENT DETAILS<br>(5.0mX5.0mX1) |
| | | | | Checked By | PMS | | |
| | | | | Approved By | BNS | | |

| Scale: | Date: |
|---|---|
| AS SHOWN | August 2019 |
| | **Drawing No.:** NNMR-TYP 05-13 |

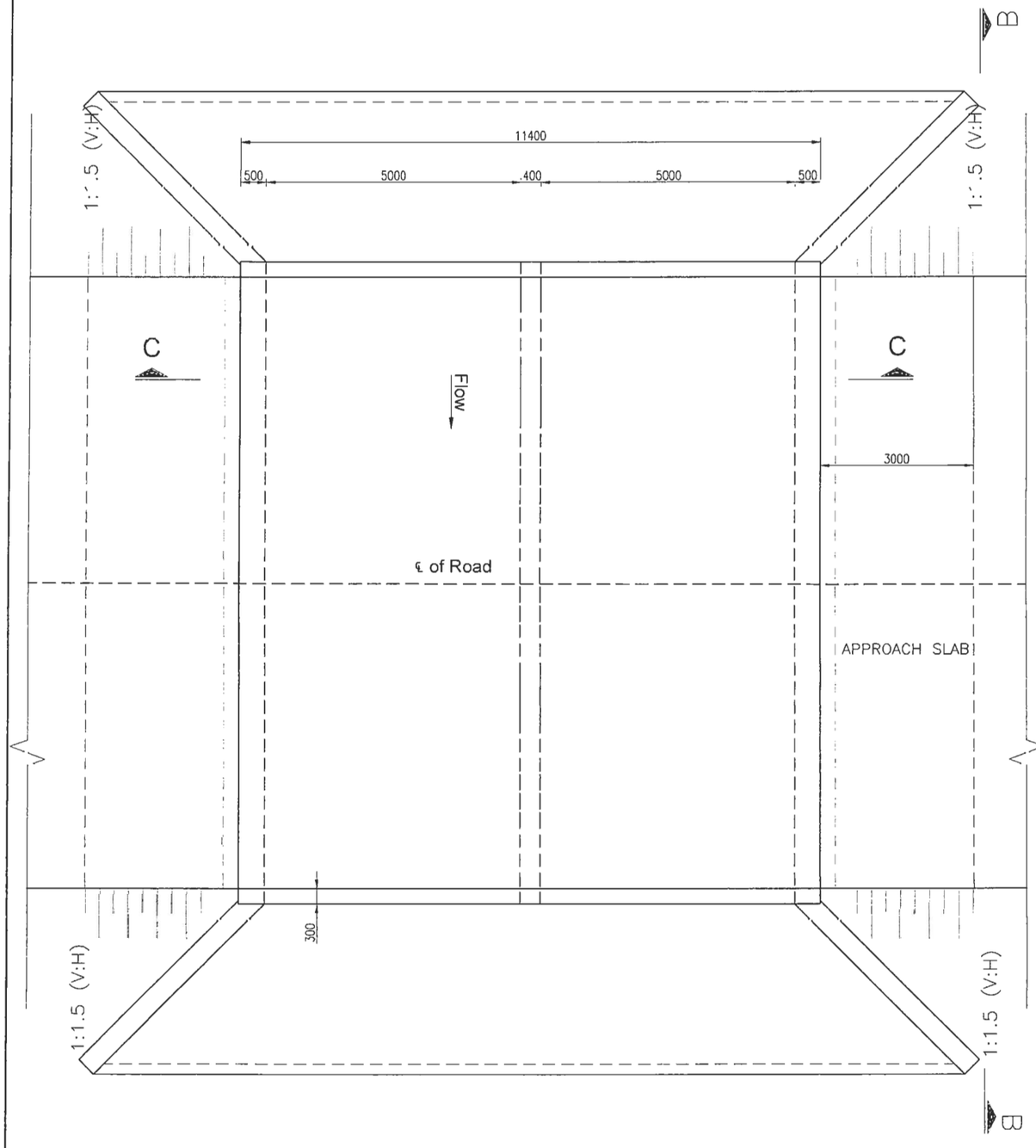


PLAN

SCALE 1:100

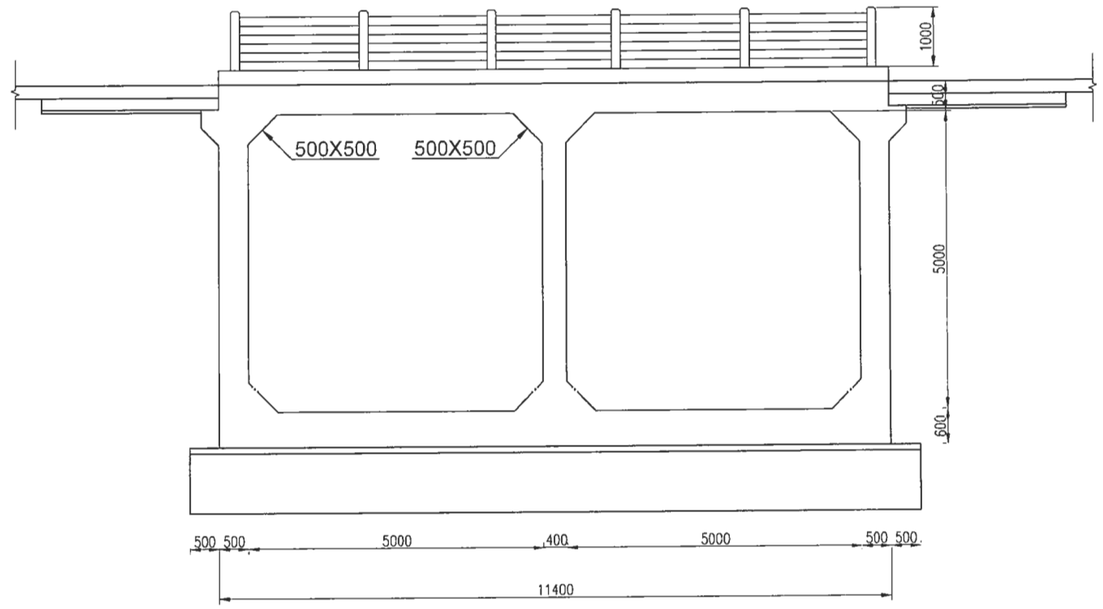


SECTION C–C

SCALE 1:100

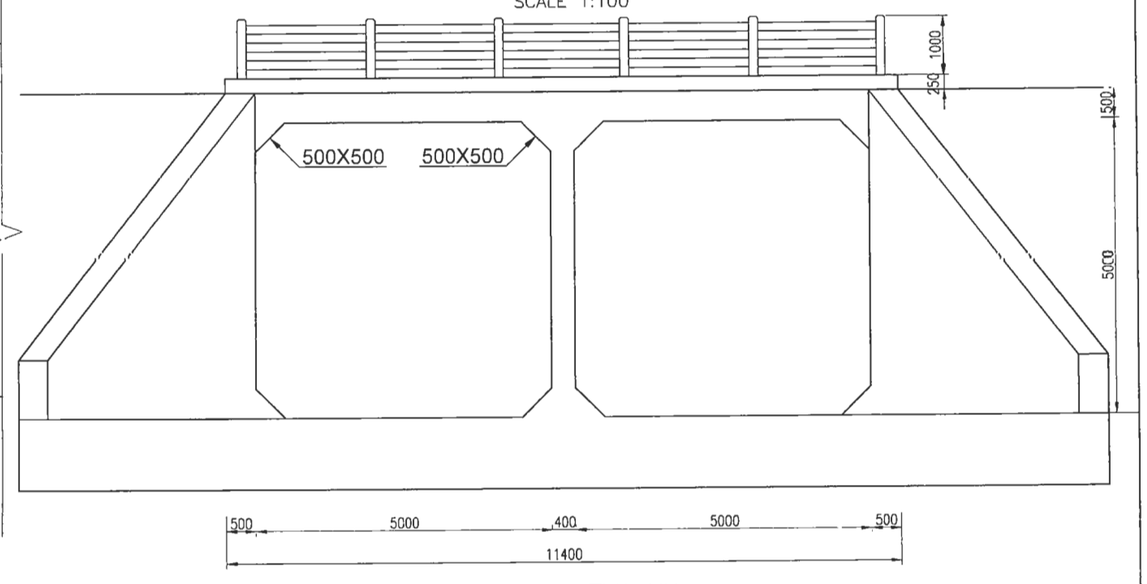


FRONT ELEVATION

SCALE 1:100

NOTES:

1. All Concrete is Grade M25/20 except M15/20 to Approach Slab and Blinding.
2. Proposed construction joints to be submitted for Engineers approval.
3. Wing Walls and Apron Slab to be cast monolithic with Box Culvert.
4. Setting out of Culvert to be checked and approved by Engineer.
5. Any adjustments to suit field conditions to be as directed by Engineer.
6. All exposed corners to be chamfered at 25x25mm.
7. All dimensions in millimeters unless noted otherwise.
8. Railing provided should be according to typical drawing of culvert & bridge RC guardrail. Spacing of railing must be adjusted to suit total length of Box Culvert .

| EMPLOYER | PROJECT | DESIGN CONSULTANT | | | | | | |
|---|---|---|---|---|---|---|---|---|
| Government of Nepal<br>Ministry of Physical Infrastructure and Transport<br>**Department of Roads**<br>**Development Cooperation Implementation Division** | Nepal India Regional Trade and Transport Project (NIRTTP)<br>(IDA CREDIT No. 5273 - NEP)<br>Detailed Design for Improvement of Kathmandu (Nagdhunga) - Naubise - Mugling Road and Bridges | Intercontinental Consultants & Technocrats Pvt. Ltd.<br>A-8, Green Park, New Delhi - 110016<br>Ph : 4086-3000, Fax 2685-5252<br>In Joint Venture With<br>Soosung Engineering Co. Ltd., South Korea | In Association With<br>Full Bright Consultancy (Pvt.) Ltd.<br>316,Baburam Acharya Sadak<br>Sinamangal, Kathmandu, GPO Box: 4970, Kathmandu, Nepal | Designed By | SB | | **DRAWING NAME:**<br>DOUBLE CELL BOX CULVERT GENERAL ARRANGEMENT (5.0mX5.0mX2) | **Scale:**<br>NOT TO SCALE AS SHOWN | **Date:**<br>August 2019 |
| | | | | Checked By | PMS | | | | **Drawing No.:**<br>NNMR-TYP 05-14 |
| | | | | Approved By | BNS | | | | |

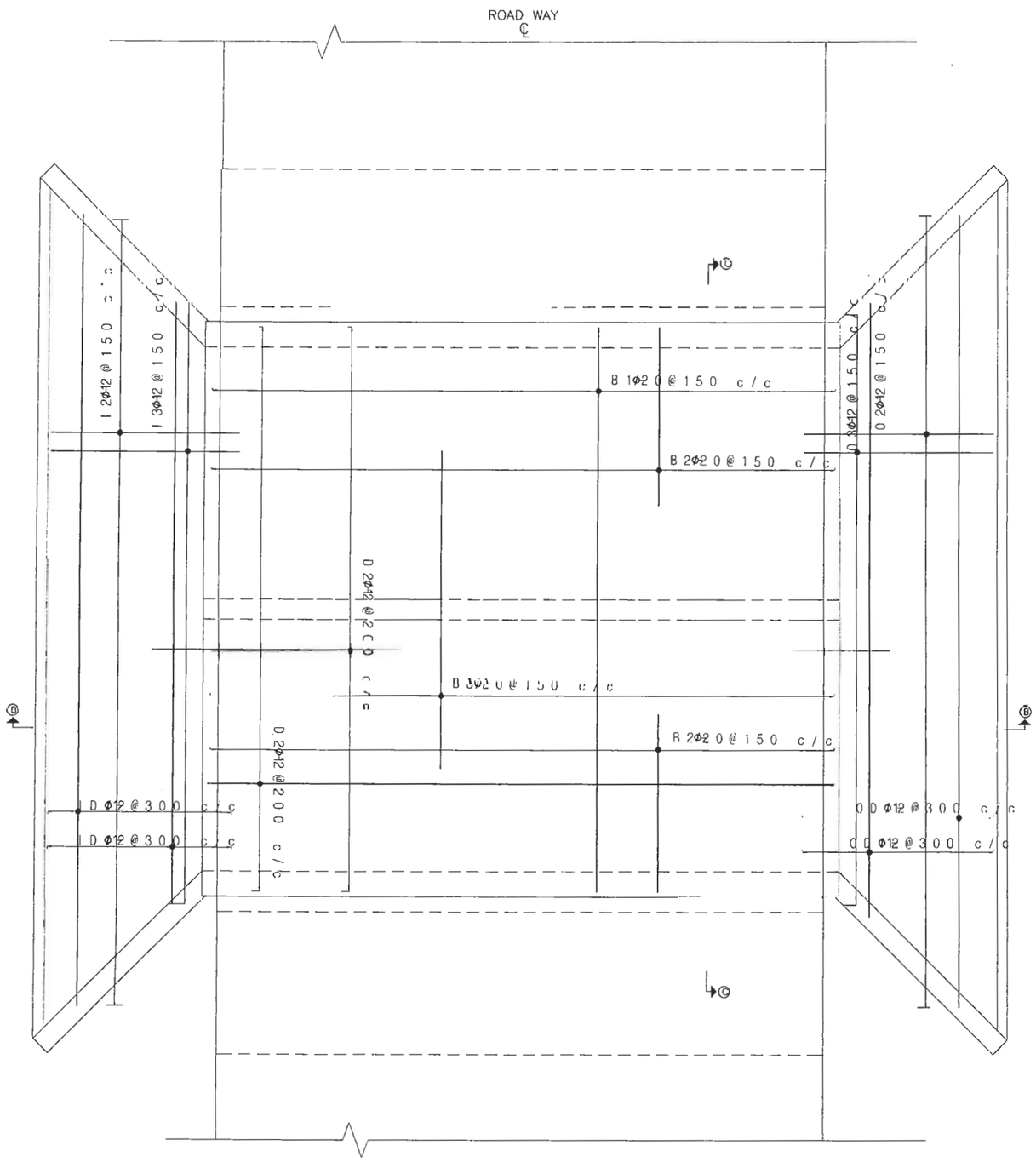


PLAN OF CULVERT – BASE

SCALE 1:100

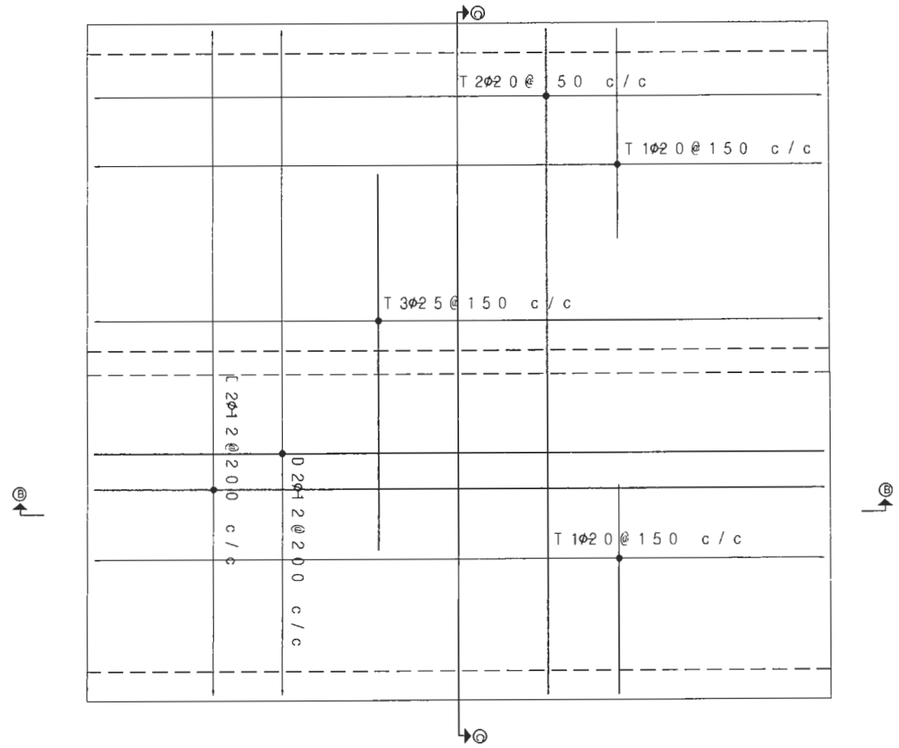


PLAN OF CULVERT TOP SLAB

SCALE 1:100

NOTES:

1. All Reinforcement to be High Yield Deformed steel bars Grade 415 to IS 1786.
2. Minimum reinforcement cover is 50mm except to surfaces exposed to ground or fill where cover is 75mm.
3. Location and length of spliced laps to be
4. All dimensions in millimeters unless noted otherwise.

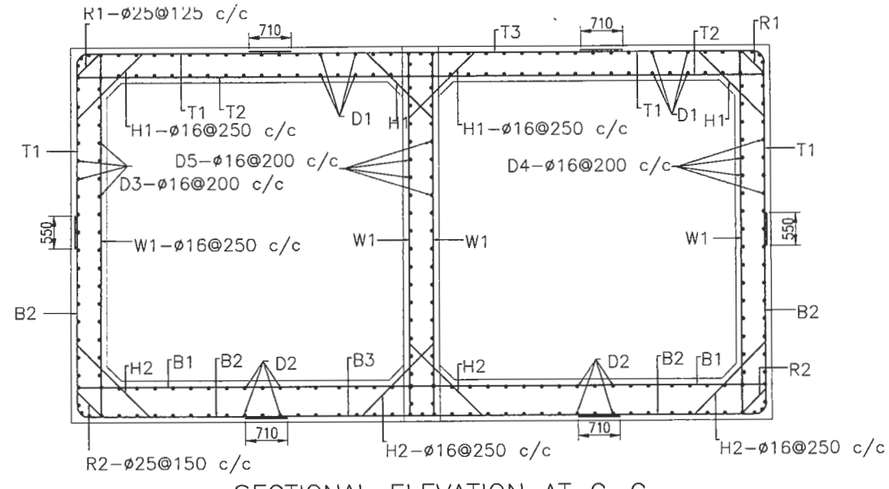


SECTIONAL ELEVATION AT C–C

SCALE 1:100

| EMPLOYER | PROJECT | DESIGN CONSULTANT | | | | | | |
|---|---|---|---|---|---|---|---|---|
| Government of Nepal<br>Ministry of Physical Infrastructure and Transport<br>**Department of Roads**<br>**Development Cooperation Implementation Division** | Nepal India Regional Trade and Transport Project (NIRTTP)<br>(IDA CREDIT No. 5273 - NEP)<br>Detailed Design for Improvement of Kathmandu (Nagdhunga) - Naubise - Mugling Road and Bridges | Intercontinental Consultants & Technocrats Pvt. Ltd.<br>A-8, Green Park, New Delhi - 110016<br>Ph : 4086-3000, Fax 2685-5252<br>In Joint Venture With<br>Soosung Engineering Co. Ltd., South Korea<br>FBC<br>In Association With<br>Full Bright Consultancy (Pvt.) Ltd.<br>316,Baburam Acharya Sadak<br>Sinamangal, Kathmandu, GPO Box: 4970, Kathmandu, Nepal | Designed By | SB | | **DRAWING NAME:**<br>DOUBLE CELL BOX CULVERT REINFORCEMENT DETAILS (5.0mX5.0mX2) | **Scale:**<br>AS SHOWN | **Date:**<br>August 2019 |
| | | | Checked By | PMS | | | | **Drawing No.:**<br>NNMR-TYP 05-15 |
| | | | Approved By | BNS | | | | |

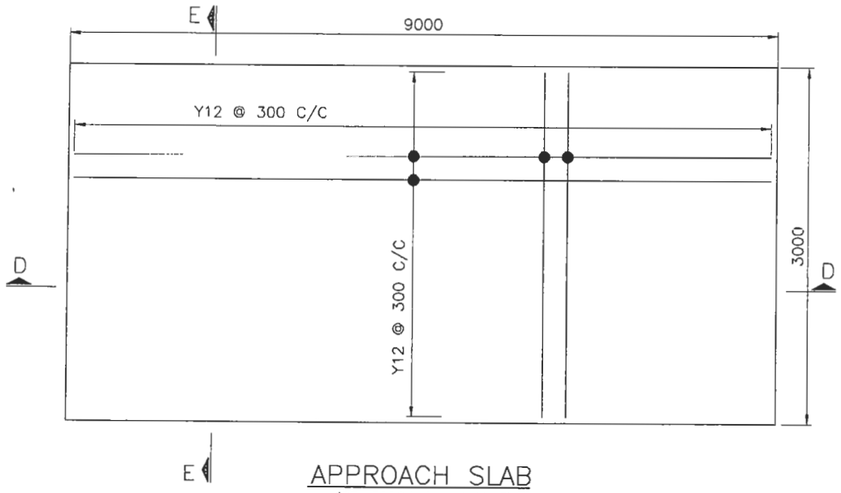


APPROACH SLAB
(REINFORCEMENT DETAILS)

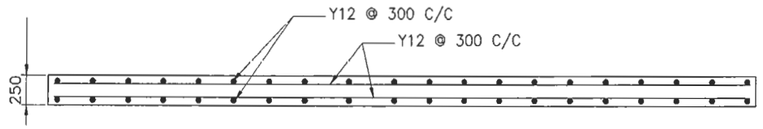


SECTION D–D

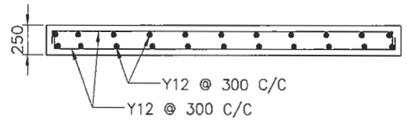


SECTION E–E

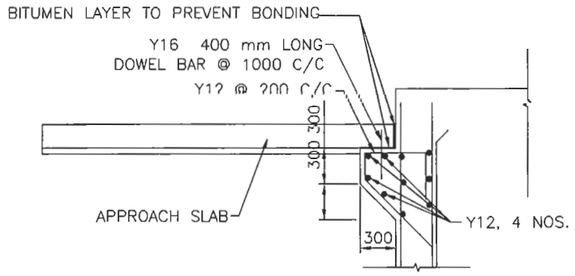


DETAIL F

NOTES:

1. All Concrete is Grade M30/20 except M15/20 to Approach Slab and Blinding.
2. Proposed construction joints to be submitted for Engineers approval.
3. Wing Walls and Apron Slab to be cast monolithic with Box Culvert.
4. Setting out of Culvert to be checked and approved by Engineer.
5. Any adjustments to suit field conditions to be as directed by Engineer.
6. All exposed corners to be chamfered at 25x25mm.
7. All dimensions in millimeters unless noted otherwise.
8. Railing provided should be according to typical drawing of culvert & bridge RC guardrail. Spacing of railing must be adjusted to suit total length of Box Culvert .
9. All Reinforcement to be High Yield Deformed steel bars Grade 415 to IS 1786.
10. Minimum reinforcement cover is 50mm except to surfaces exposed to ground or fill where cover is 75mm.
11. Location and length of spliced laps to be
12. All dimensions in millimeters unless noted otherwise.

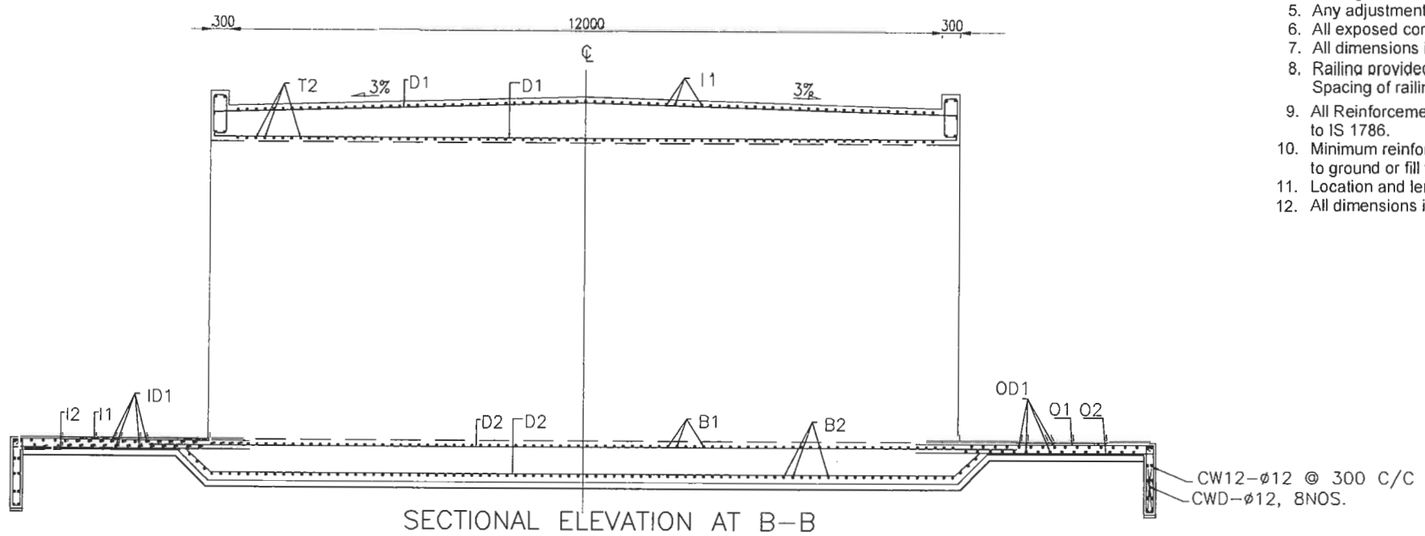


SECTIONAL ELEVATION AT B–B
SCALE 1:100

| EMPLOYER | PROJECT | DESIGN CONSULTANT | | | | | | |
|---|---|---|---|---|---|---|---|---|
| Government of Nepal<br>Ministry of Physical Infrastructure and Transport<br>**Department of Roads**<br>**Development Cooperation Implementation Division** | Nepal India Regional Trade and Transport Project (NIRTTP)<br>(IDA CREDIT No. 5273 - NEP)<br>Detailed Design for Improvement of Kathmandu (Nagdhunga) - Naubise - Mugling Road and Bridges | Intercontinental Consultants & Technocrats Pvt. Ltd.<br>A-8, Green Park, New Delhi - 110016<br>Ph : 4086-3000, Fax 2685-5252<br>In Joint Venture With<br>Soosung Engineering Co. Ltd., South Korea | In Association With<br>Full Bright Consultancy (Pvt.) Ltd.<br>316,Baburam Acharya Sadak<br>Sinamangal, Kathmandu, GPO Box: 4970, Kathmandu, Nepal | Designed By | SB | | **DRAWING NAME:**<br>DOUBLE CELL BOX CULVERT REINFORCEMENT DETAILS (5.0mX5.0mX2) | **Scale:**<br>AS SHOWN | **Date:**<br>August 2019 |
| | | | | Checked By | PMS | | | | **Drawing No.:**<br>NNMR-TYP 05-16 |
| | | | | Approved By | BNS | | | | |

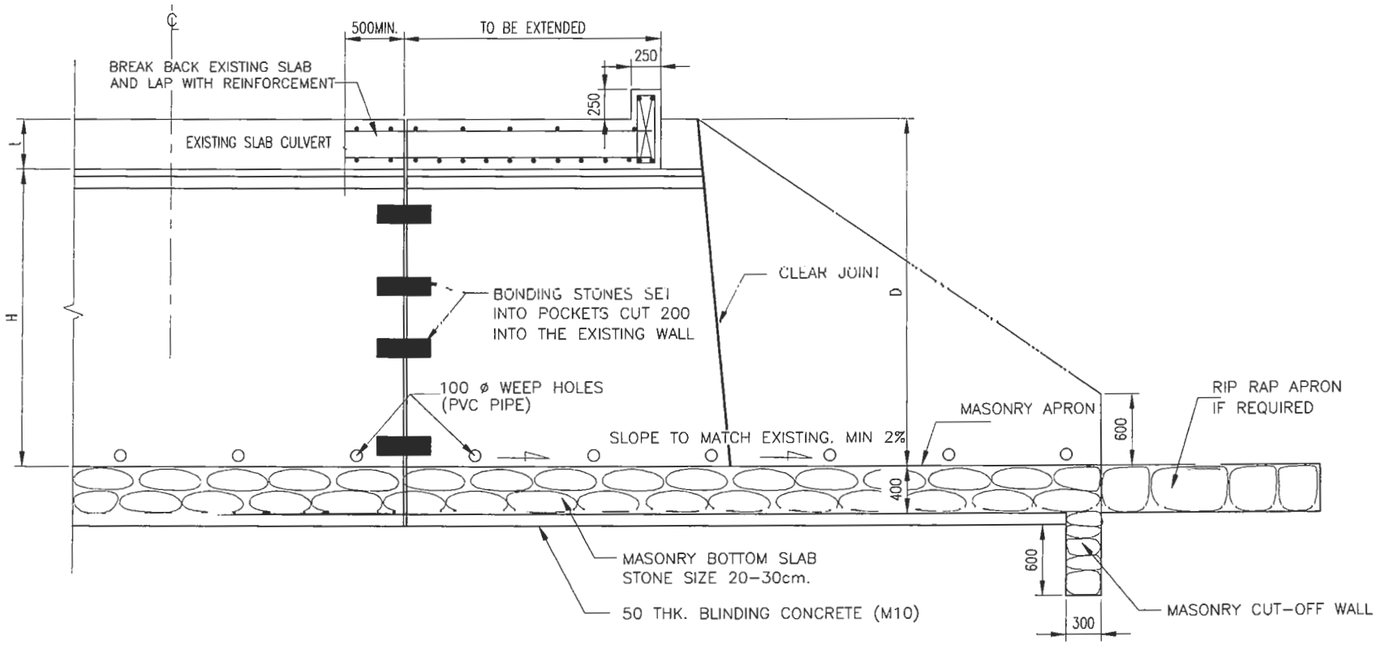


## SECTION 1-1

SCALE-A

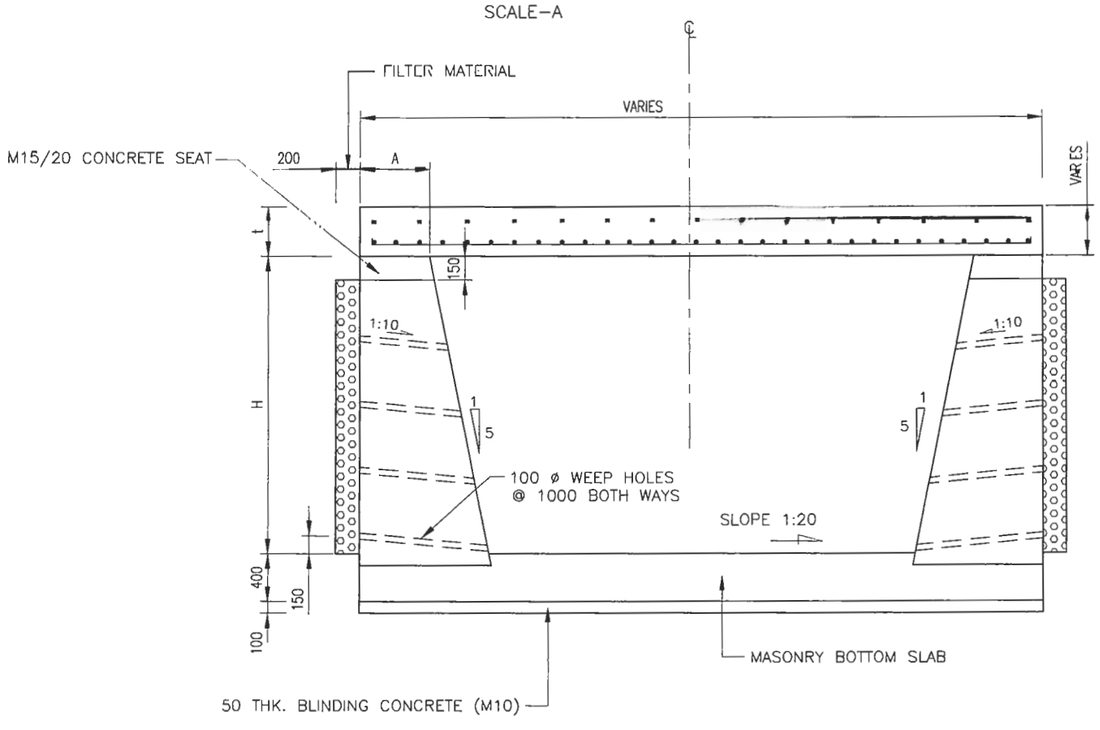


## SECTION 2-2

SCALE-A

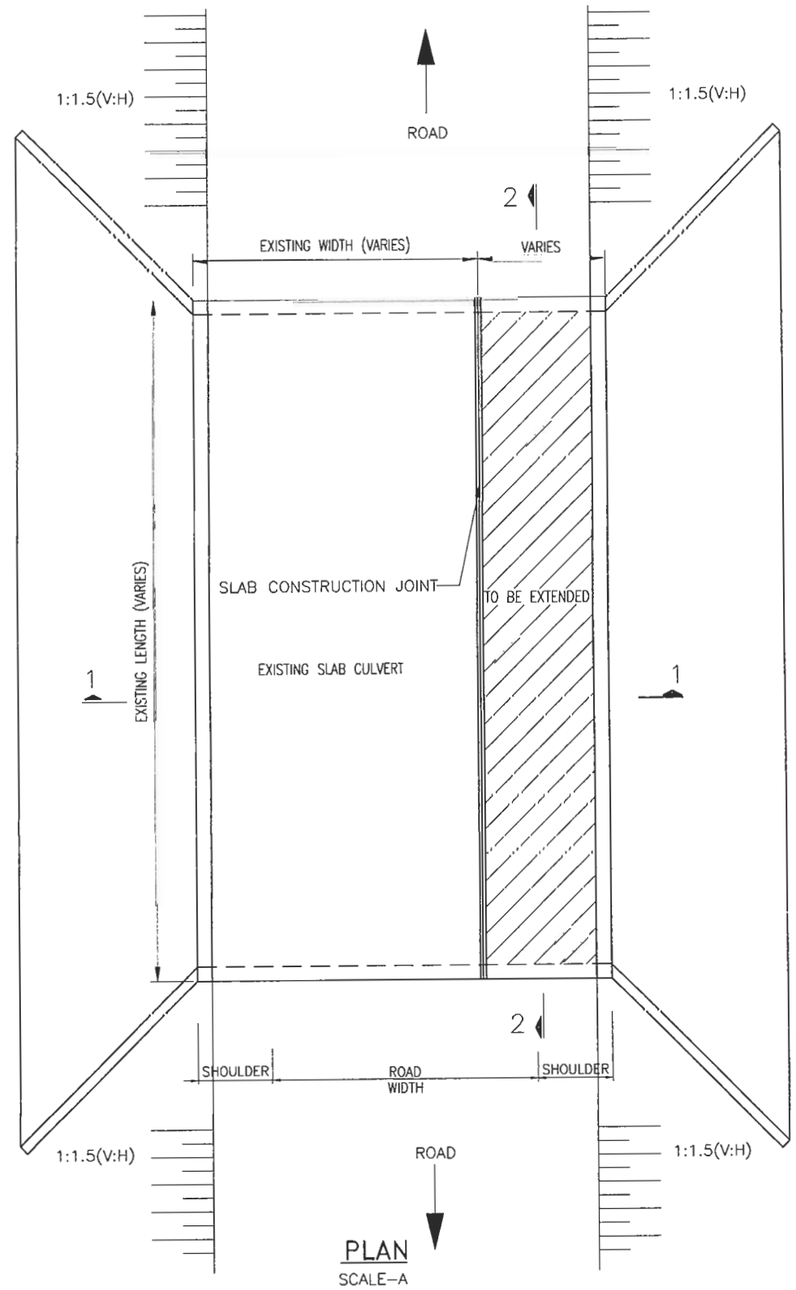


## PLAN

SCALE-A

NOTE: FOR SLAB THICKNENESS, AB TMENT SI E AND REINFORCEMENT REFER DRAWING OF SLAB C LVERT

| EMPLOYER | PROJECT | DESIGN CONSULTANT | | | | DRAWING NAME: | Scale: | Date: |
|---|---|---|---|---|---|---|---|---|
| Government of Nepal<br>Ministry of Physical Infrastructure and Transport<br>**Department of Roads**<br>**Development Cooperation Implementation Division** | Nepal India Regional Trade and Transport Project<br>(NIRTTP)<br>(IDA CREDIT No. 5273 - NEP)<br>Detailed Design for Improvement of Kathmandu (Nagdhunga) - Naubise - Mugling Road and Bridges | Intercontinental Consultants & Technocrats Pvt. Ltd.<br>A-8, Green Park, New Delhi - 110016<br>Ph : 4086-3000, Fax 2685-5252<br>In Joint Venture With<br>Soosung Engineering Co. Ltd., South Korea | In Association With<br>Full Bright Consultancy (Pvt.) Ltd.<br>316,Baburam Acharya Sadak<br>Sinamangal, Kathmandu, GPO<br>Box: 4970, Kathmandu, Nepal | Designed By | SB | EXTENSION OF OLD STR□CT□RE<br>(SLAB C□LVERT) | NOT TO SCALE | August 2019 |
| | | | | Checked By | PMS | | | **Drawing No.:** |
| | | | | Approved By | BNS | | | NNMR-TYP 05-17 |

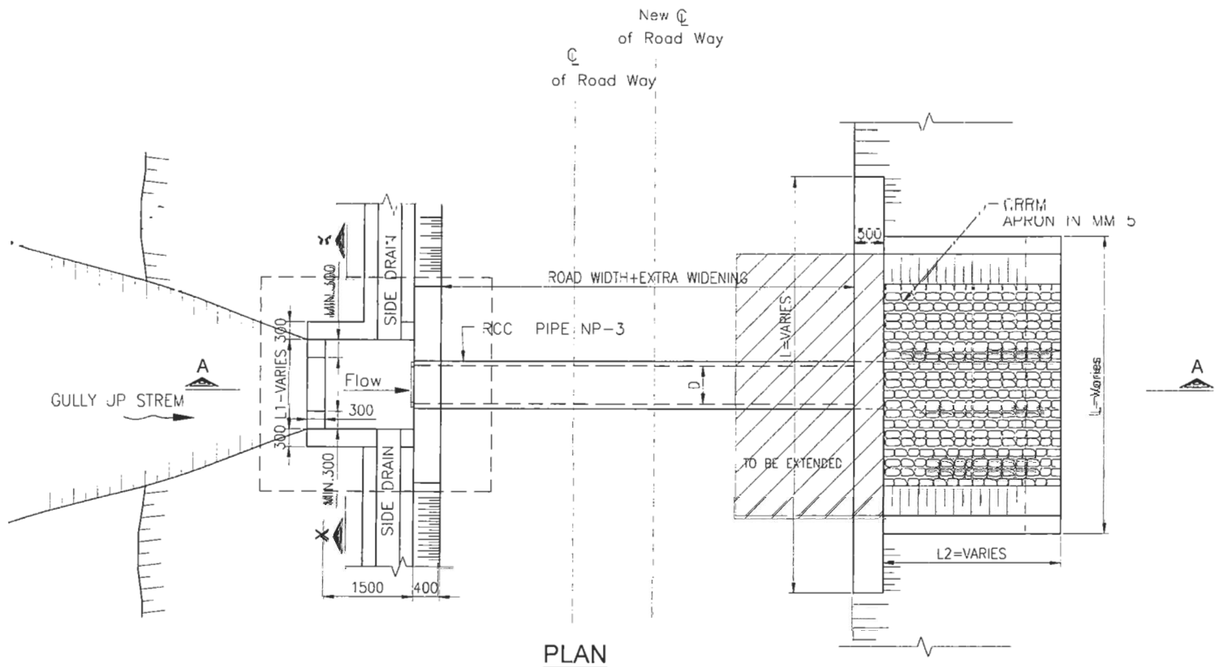


PLAN

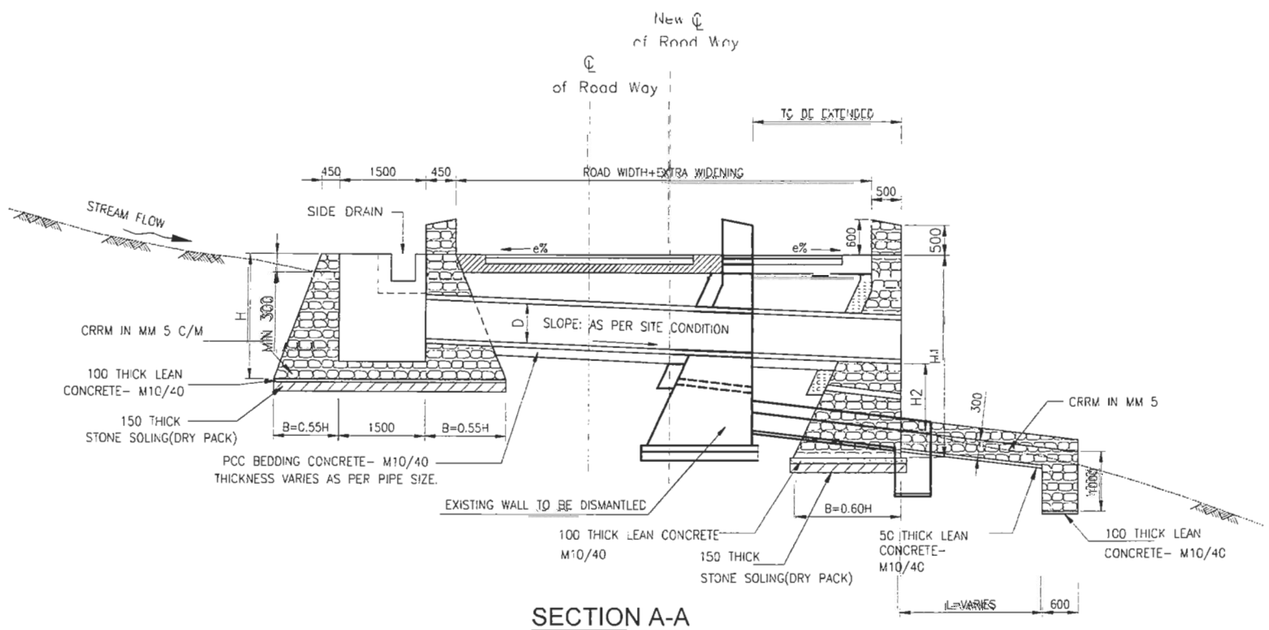


SECTION A-A

| EMPLOYER | PROJECT | DESIGN CONSULTANT | | | | | |
|---|---|---|---|---|---|---|---|
| Government of Nepal<br>Ministry of Physical Infrastructure and Transport<br>**Department of Roads**<br>**Development Cooperation Implementation Division** | Nepal India Regional Trade and Transport Project<br>(NIRTTP)<br>(IDA CREDIT No. 5273 - NEP)<br>Detailed Design for Improvement of Kathmandu (Nagdhunga) - Naubise - Mugling Road and Bridges | Intercontinental Consultants & Technocrats Pvt. Ltd.<br>A-8, Green Park, New Delhi - 110016<br>Ph : 4086-3000, Fax 2685-5252<br>In Joint Venture With<br>Soosung Engineering Co. Ltd., South Korea<br>FBC | In Association With<br>Full Bright Consultancy (Pvt.) Ltd.<br>316,Baburam Acharya Sadak<br>Sinamangal, Kathmandu, GPO<br>Box: 4970, Kathmandu, Nepal | Designed By | SB | **DRAWING NAME:**<br>EXTENSION OF OLD STR□CT□RE<br>(PIPE C□LVERT) | **Scale:**<br>NOT TO SCALE |
| | | | | Checked By | PMS | | **Date:**<br>August 2019 |
| | | | | Approved By | BNS | | **Drawing No.:**<br>NNMR-TYP 05-18 |

# RETAINING STRUCTURES

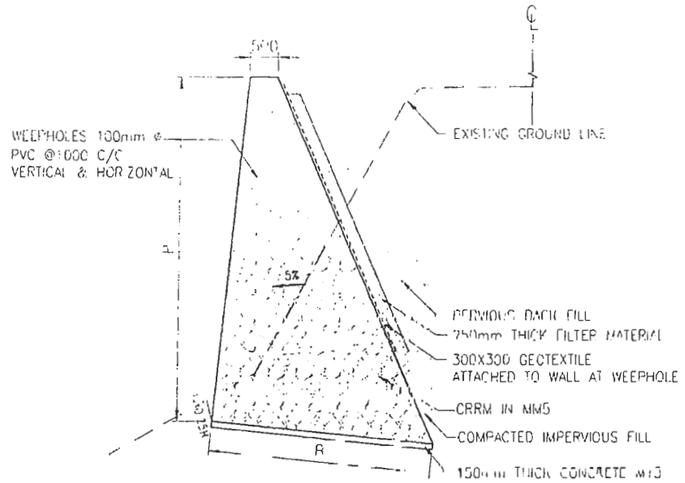


STONE MASONRY RETAINING WALL
(VALLEY SIDE)

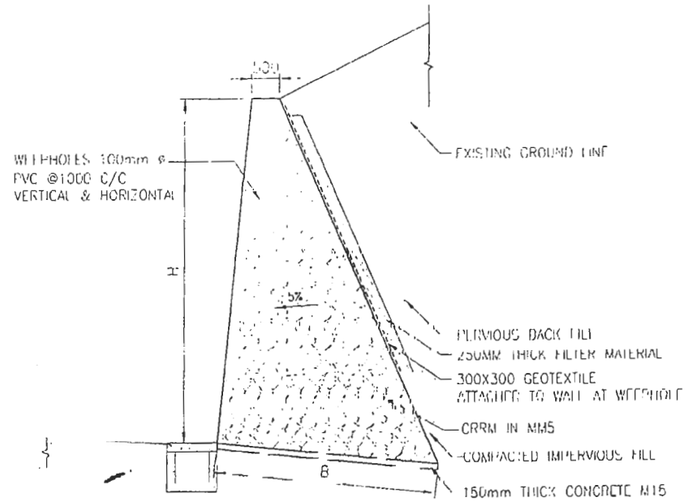


STONE MASONRY RETAINING WALL
(HILLSIDE)

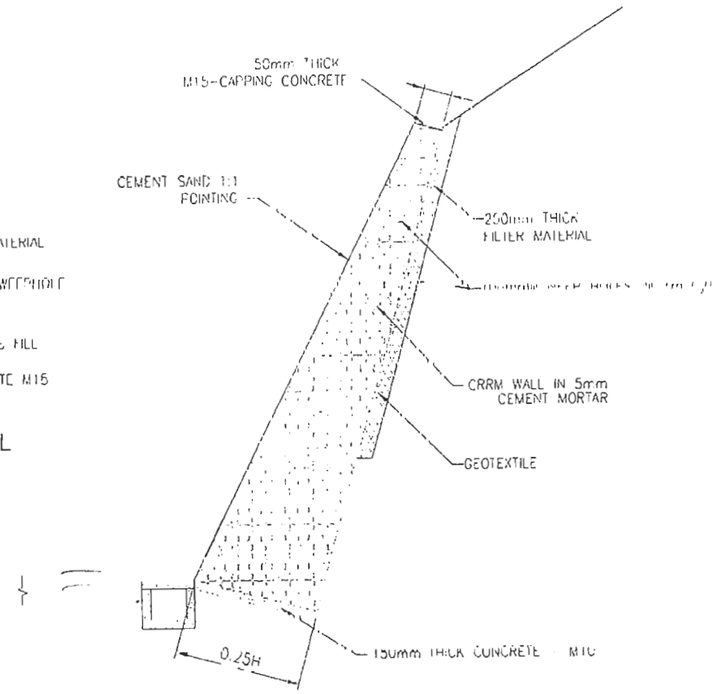


CEMENT MASONRY
BREAST WALL
Units are mentioned in meter

NOTES :

1. Wall height is to be modified as per actual site condition or as directed by the Engineer
2. For Toe Pressure>25 Ton/m2 weather rock or rock foundation is envisized in case of soil investigation will be required.
3. Expansion Joint is to be provided at a maximum distance of 10.0 m C/C or as directed by the Engineer.
4. FSS means factor of safety against sliding and FSO means factor of safety against overturning.
5. All dimensions are in mm except otherwise mentioned.
6. Safety blocks to be provided where the wall height is more than 3.0 m.

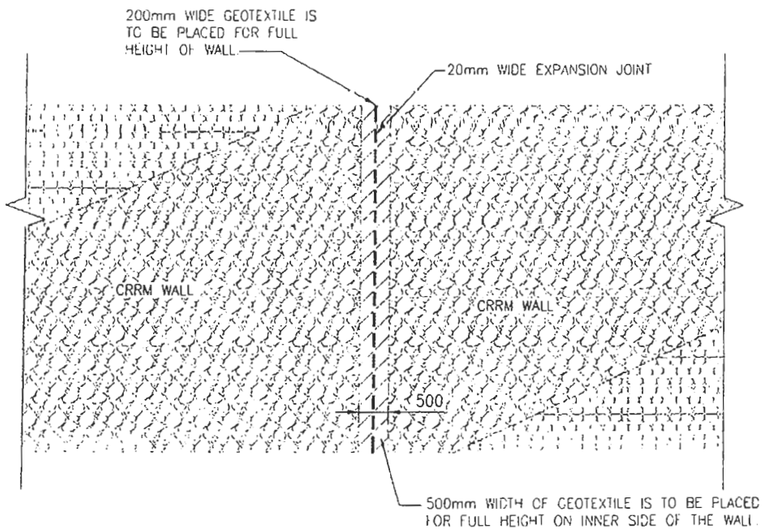


EXPANSION JOINT DETAILS

| Types | Cement Masonry |
|---|---|
| Top Width (m) | 0.5 |
| Base Width | 0.25H |
| Front Batter (V:H) | Varies |
| Back Batter (V:H) | 3:1 |
| Foundation Dip (V:H) | 1:3 |
| Foundation Depth (V:H) | 0.5 |
| Height Range (m) | 1.0 - 8.0 |
| Hill Slope Angle ° | 35° - 70° |

## TYPE - SMW

| H (m) | Φ=40° | | | | Φ=30° | | | | Φ=24° | | | |
|---|---|---|---|---|---|---|---|---|---|---|---|---|
| | B (m) | FSS | FSO | Max. Toe Pressure (kN/m2) | B (m) | FSS | FSO | Max. Toe Pressure (km/M2) | B (m) | FSS | FSO | Max. Toe Pressure (kN/m2) |
| 2 | 1.36 | 2.03 | 2.56 | 92.00 | 1.50 | 1.65 | 2.46 | 100.00 | | | | |
| 3 | 2.00 | 2.23 | 2.66 | 129.90 | 2.18 | 1.84 | 2.58 | 140.00 | 2.38 | 1.69 | 2.58 | 144.20 |
| 4 | 2.61 | 2.37 | 2.74 | 165.30 | 2.83 | 1.95 | 2.63 | 178.50 | 3.08 | 1.73 | 2.62 | 183.80 |
| 5 | 3.20 | 2.44 | 2.76 | 200.90 | 3.47 | 2.01 | 2.66 | 220.50 | 3.78 | 1.79 | 2.65 | 221.90 |

| EMPLOYER | PROJECT | DESIGN CONSULTANT | | | | | |
|---|---|---|---|---|---|---|---|
| Government of Nepal<br>Ministry of Physical Infrastructure and Transport<br>Department of Roads<br>Development Cooperation Implementation Division | Nepal India Regional Trade and Transport Project (NIRTTP)<br>(IDA CREDIT No. 5273 - NEP)<br>Detailed Design for Improvement of Kathmandu (Nagdhunga) - Naubise - Mugling Road and Bridges | Intercontinental Consultants & Technocrats Pvt. Ltd<br>A-8, Green Park, New Delhi - 110016<br>Ph : 4086-3000, Fax 2685-5252<br>In Joint Venture With<br>Soosung Engineering Co. Ltd., South Korea | In Association With<br>Full Bright Consultancy (Pvt.) Ltd.<br>316,Baburam Acharya Sadak<br>Sinamangal, Kathmandu, GPO Box: 4970, Kathmandu, Nepal | Designed By | SB | DRAWING NAME: | Scale: |
| | | | | Checked By | PMS | MASONRY RETAINING WALL | NOT TO SCALE |
| | | | | Approved By | BNS | | |

Date: August 2019

Drawing No.: NNMR-TYP 06 -01

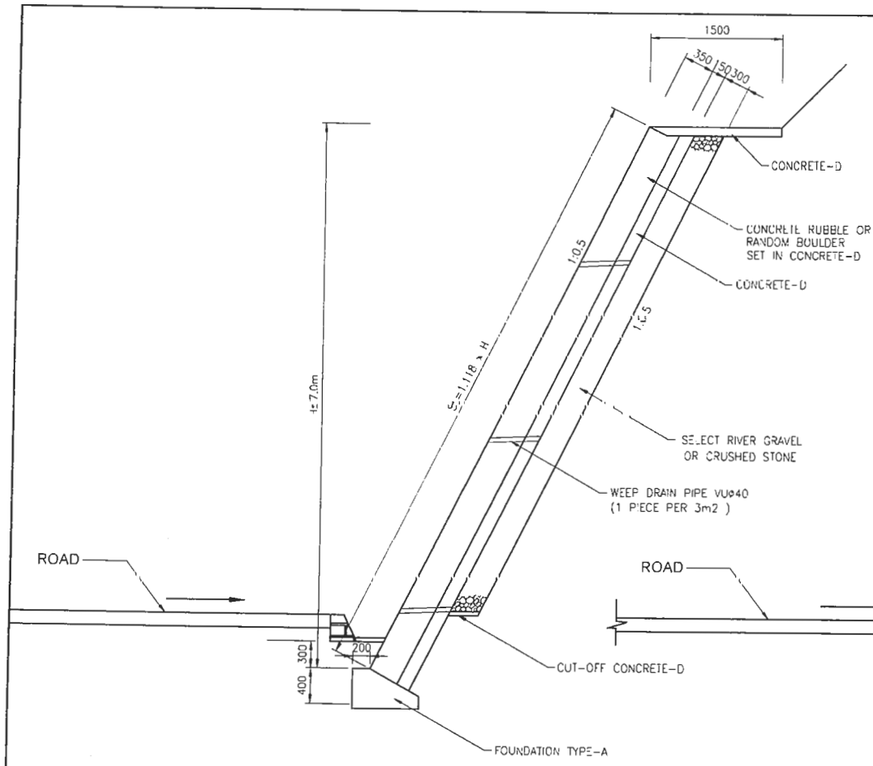


WET MASONRY TYPE-A

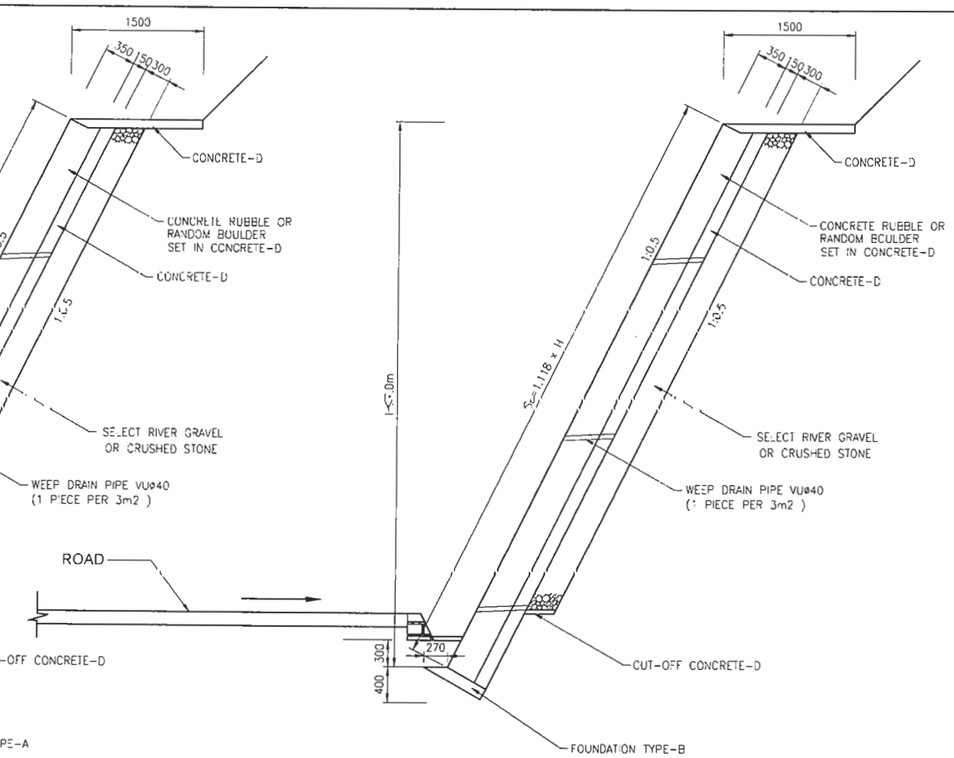


WET MASONRY TYPE-A

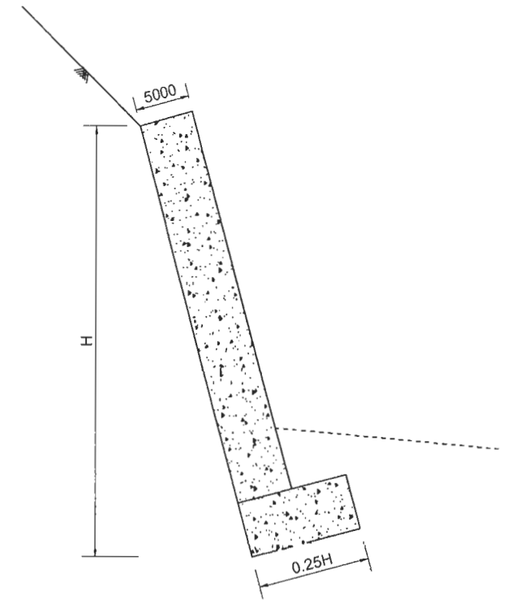


CONCRETE

# BREAST WALL

Units are mentioned in meter

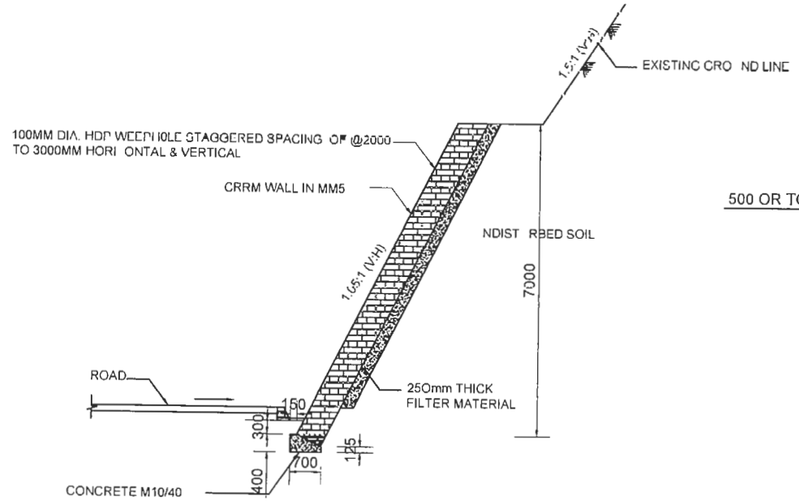


CRRM REVETMENT
5.00 - 7.00m HEIGHT

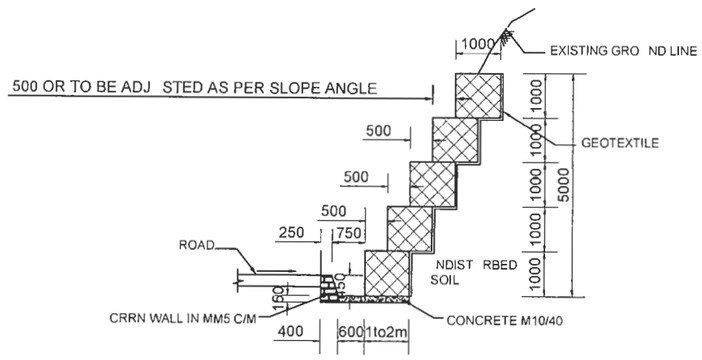


GABION TYPE
UPTO 5.00m HEIGHT

# REVETMENTS

Units are mentioned in meter

| Types | Concrete |
|---|---|
| Top Width (m) | 0.5 |
| Base Width | 0.25H |
| Front Batter (V:H) | Varies |
| Back Batter (V:H) | 3:1 |
| Foundation Dip (V:H) | 1:3 |
| Foundation Depth (V:H) | 0.5 |
| Height Range (m) | 1.0 - 12.0 |
| Hill Slope Angle ° | 35° - 70° |

NOTES:

1. All dimensions are in mm except otherwise mentioned.
2. Revetment structures should be used for protection works only. ie for zero earth pressure case.

| EMPLOYER | PROJECT | DESIGN CONSULTANT | | | | | |
|---|---|---|---|---|---|---|---|
| Government of Nepal<br>Ministry of Physical Infrastructure and Transport<br>**Department of Roads**<br>**Development Cooperation Implementation Division** | Nepal India Regional Trade and Transport Project (NIRTTP)<br>(IDA CREDIT No. 5273 - NEP)<br>Detailed Design for Improvement of Kathmandu (Nagdhunga) - Naubise - Mugling Road and Bridges | Intercontinental Consultants & Technocrats Pvt. Ltd.<br>A-8, Green Park, New Delhi - 110016<br>Ph : 4086-3000, Fax 2685-5252<br>In Joint Venture With<br>Soosung Engineering Co. Ltd., South Korea | In Association With<br>Full Bright Consultancy (Pvt.) Ltd.<br>316,Baburam Acharya Sadak<br>Sinamangal, Kathmandu, GPO Box: 4970, Kathmandu, Nepal | Designed By | SB | **DRAWING NAME:**<br>Standard Drawings of Revetment and Breast Walls | **Scale:**<br>0 1.0 2.0 | **Date:**<br>August 2019 |
| | | | | Checked By | PMS | | | **Drawing No.:**<br>NNMR-TYP 06 -02 |
| | | | | Approved By | BNS | | | |

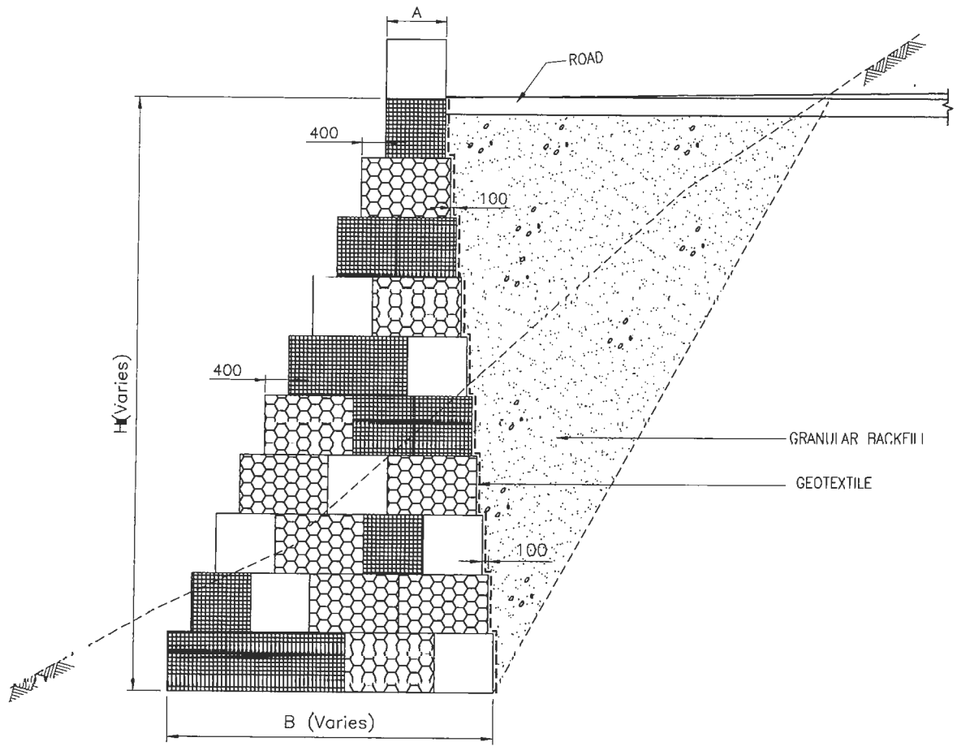


**GRAVITY GABION WALL (FRONT BATTER)**

**GRAVITY GABION WALL (BACK BATTER)**

# Detail for semi gravity gabion walls

| BASE WIDTHS AND TYPICAL GROUND PRESSURES(T/M²) | | | | | | | | |
|---|---|---|---|---|---|---|---|---|
| Wall Height(m) | | 2 | 3 | 4 | 6 | 8 | 10 | 12 |
| Front Batter | Base width, m | 1.5 | 2.0 | 2.5 | 3.5 | 4.5 | 5.5 | 6.5 |
| | Ground pressure(T/M²) | 50 | 70 | 90 | 120 | 150 | 190 | 230 |
| Back Batter | Base width, m | 1.5 | 2.0 | 2.55 | 3.5 | 4.5 | 5.5 | 6.5 |
| | Ground pressure(T/M²) | 70 | 110 | 150 | 220 | 290 | 360 | 420 |

NOTES:

1. All dimensions are in mm except otherwise mentioned.
2. For wall height more than 6.0m and backfill slope angle greater than 20, detail designed with soil investigation is to be done or as directed by the engineer
3. If space is available, sloping outside is preferred for valley side of the road.

| EMPLOYER | PROJECT | DESIGN CONSULTANT | | | | | | |
|---|---|---|---|---|---|---|---|---|
| Government of Nepal<br>Ministry of Physical Infrastructure and Transport<br>**Department of Roads**<br>**Development Cooperation Implementation Division** | Nepal India Regional Trade and Transport Project (NIRTTP)<br>(IDA CREDIT No. 5273 - NEP)<br>Detailed Design for Improvement of Kathmandu (Nagdhunga) - Naubise - Mugling Road and Bridges | Intercontinental Consultants & Technocrats Pvt. Ltd.<br>A-8, Green Park, New Delhi - 110016<br>Ph : 4086-3000, Fax 2685-5252<br>In Joint Venture With<br>Soosung Engineering Co. Ltd., South Korea | In Association With<br>Full Bright Consultancy (Pvt.) Ltd.<br>316,Baburam Acharya Sadak<br>Sinamangal, Kathmandu, GPO Box: 4970, Kathmandu, Nepal | Designed By | SB | | **DRAWING NAME:**<br>GABION RETAINING WALL | **Scale:**<br>NOT TO SCALE | **Date:**<br>August 2019 |
| | | | | Checked By | PMS | | | | **Drawing No.:**<br>NNMR-TYP 06 -03 |
| | | | | Approved By | BNS | | | | |

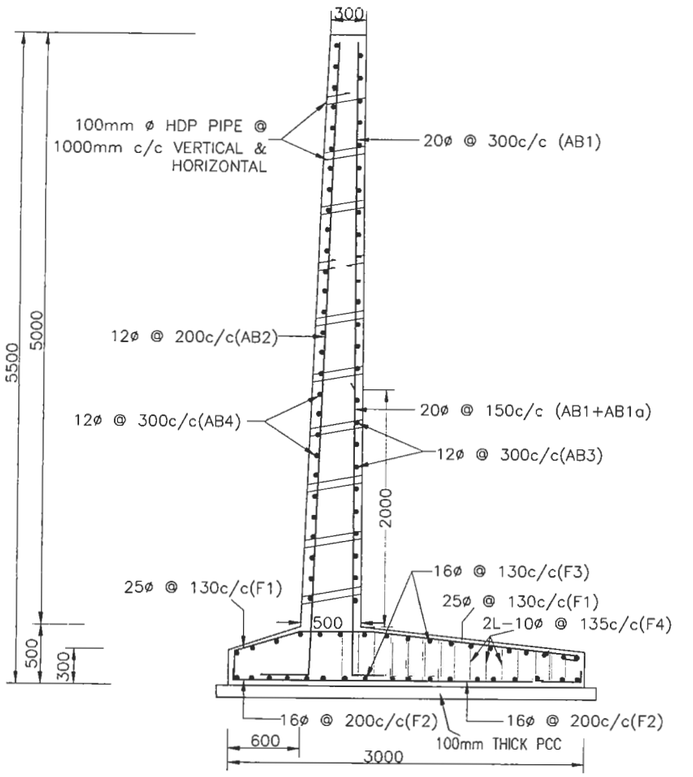


5.0M HEIGHT
(SCALE -1:50)

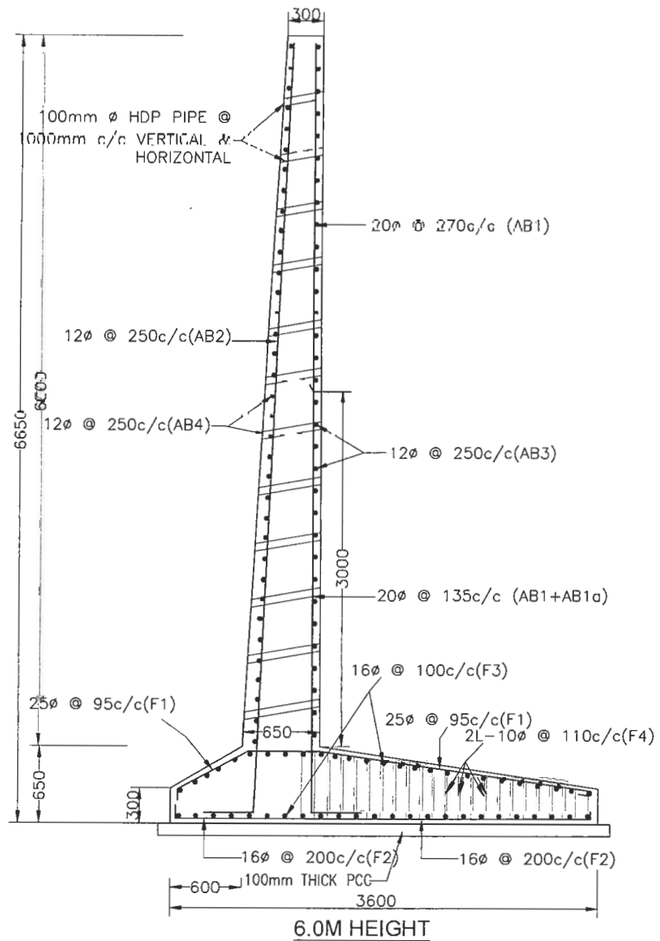


6.0M HEIGHT
(SCALE -1:50)

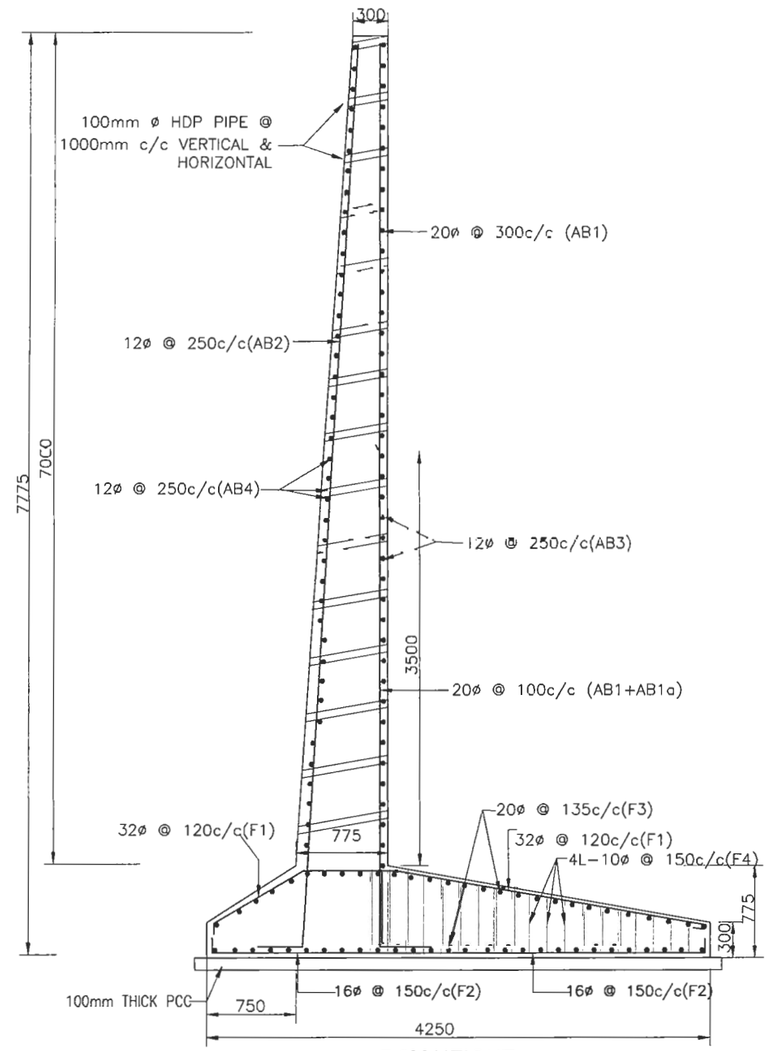


7.0M HEIGHT
(SCALE -1:50)

| EMPLOYER | PROJECT | DESIGN CONSULTANT | | | | | |
|---|---|---|---|---|---|---|---|
| Government of Nepal<br>Ministry of Physical Infrastructure and Transport<br>**Department of Roads**<br>**Development Cooperation Implementation Division** | Nepal India Regional Trade and Transport Project (NIRTTP)<br>(IDA CREDIT No. 5273 - NEP)<br>Detailed Design for Improvement of Kathmandu (Nagdhunga) - Naubise - Mugling Road and Bridges | Intercontinental Consultants & Technocrats Pvt. Ltd.<br>A-8, Green Park, New Delhi - 110016<br>Ph : 4086-3000, Fax 2685-5252<br>In Joint Venture With<br>Soosung Engineering Co. Ltd., South Korea | In Association With<br>Full Bright Consultancy (Pvt.) Ltd.<br>316,Baburam Acharya Sadak<br>Sinamangal, Kathmandu, GPO<br>Box: 4970, Kathmandu, Nepal | Designed By | SB | **DRAWING NAME:**<br>RCC RETAINING WALL<br>(5,6 & 7m HEIGHT) | **Scale:**<br>AS SHOWN |
| | | | | Checked By | PMS | | **Date:**<br>August 2019 |
| | | | | Approved By | BNS | | **Drawing No.:**<br>NNMR-TYP 06 -04 |

## SCHEDULE OF REINFORCEMENT

| TYPE OF BAR | SHAPE OF BAR (NOT TO SCALE) (DIMENSIONS ARE IN MILIMETERS) | Ø OF BARS (mm) | NO. OF BARS | LENGTH (m) | TOTAL LENGTH (m) | TOTAL WEIGHT (kg) |
|---|---|---|---|---|---|---|
| *RCC RETAINING WALL (5m HEIGHT/ 10m LENGTH)* | | | | | | |
| AB1 | 5543 / 600 | 20 | 34 | 5.943 | 202.06 | 499.1 |
| AB1a | 2393 / 600 | 20 | 33 | 2.993 | 98.769 | 244.0 |
| AB2 | 5347 / 600 | 12 | 51 | 5.947 | 303.278 | 269.9 |
| AB3 | 400 / 9900 / 400 / LAP LENGTH=50ø | 12 | 18 | 11.30 | 203.40 | 181.0 |
| AB4 | 400 / 9900 / 400 / LAP LENGTH=50ø | 12 | 18 | 11.30 | 203.40 | 181.0 |
| F1 | 200 / 557 500 1835 / 200 | 25 | 77 | 3.293 | 253.56 | 978.70 |
| F2 | 200 / 2050 / 200 | 16 | 50 | 3.250 | 162.50 | 256.80 |
| F3 | 400 / 9850 / 400 / LAP LENGTH=50ø | 16 | 34 | 11.45 | 389.30 | 615.10 |
| F4 | 935 / 75 / 75 / 160–360 | 10 | 180 | 2.54 | 457.20 | 283.50 |
| | | | | | TOTAL 3509.10 Kg | |

## SCHEDULE OF REINFORCEMENT

| TYPE OF BAR | SHAPE OF BAR (NOT TO SCALE) (DIMENSIONS ARE IN MILIMETERS) | Ø OF BARS (mm) | NO. OF BARS | LENGTH (m) | TOTAL LENGTH (m) | TOTAL WEIGHT (kg) |
|---|---|---|---|---|---|---|
| *RCC RETAINING WALL (6m HEIGHT/ 10m LENGTH)* | | | | | | |
| AB1 | 6493 / 600 | 20 | 38 | 7.093 | 269.53 | 665.70 |
| AB1a | 3543 / 600 | 20 | 37 | 4.143 | 153.291 | 378.60 |
| AB2 | 6502 / 600 | 12 | 41 | 7.102 | 291.190 | 259.20 |
| AB3 | 400 / 9900 / 400 / LAP LENGTH=50ø | 12 | 25 | 11.30 | 282.50 | 251.40 |
| AB4 | 400 / 9900 / 400 / LAP LENGTH=50ø | 12 | 25 | 11.30 | 282.50 | 251.40 |
| F1 | 200 / 620 650 2301 / 200 | 25 | 105 | 3.971 | 416.91 | 1609.30 |
| F2 | 200 / 3450 / 200 | 16 | 50 | 3.850 | 192.50 | 304.20 |
| F3 | 400 / 9850 / 400 / LAP LENGTH=50ø | 16 | 73 | 11.45 | 835.85 | 1320.60 |
| F4 | 975 / 75 / 75 / 160–510 | 10 | 242 | 2.77 | 670.34 | 415.60 |
| | | | | | TOTAL 5456.10 Kg | |

## SCHEDULE OF REINFORCEMENT

| TYPE OF BAR | SHAPE OF BAR (NOT TO SCALE) (DIMENSIONS ARE IN MILIMETERS) | Ø OF BARS (mm) | NO. OF BARS | LENGTH (m) | TOTAL LENGTH (m) | TOTAL WEIGHT (kg) |
|---|---|---|---|---|---|---|
| *RCC RETAINING WALL (7m HEIGHT/ 10m LENGTH)* | | | | | | |
| AB1 | 7614 / 600 | 20 | 34 | 8.214 | 279.28 | 689.80 |
| AB1a | 4164 / 600 | 20 | 65 | 4.764 | 309.66 | 764.90 |
| AB2 | 7628 / 600 | 12 | 41 | 8.228 | 337.368 | 300.30 |
| AB3 | 400 / 9900 / 400 / LAP LENGTH=50ø | 12 | 29 | 11.30 | 327.70 | 291.70 |
| AB4 | 400 / 9900 / 400 / LAP LENGTH=50ø | 12 | 29 | 11.30 | 327.70 | 291.70 |
| F1 | 200 / 813 775 2691 / 200 | 32 | 83 | 4.679 | 388.34 | 2458.20 |
| F2 | 200 / 4100 / 200 | 16 | 67 | 4.50 | 301.50 | 476.40 |
| F3 | 400 / 9850 / 400 / LAP LENGTH=50ø | 20 | 64 | 11.65 | 745.60 | 1841.60 |
| F4 | 512 / 75 / 75 / 160–635 | 10 | 418 | 1.969 | 823.04 | 510.30 |
| | | | | | TOTAL 7624.70 Kg | |

| EMPLOYER | PROJECT | DESIGN CONSULTANT | | | | | |
|---|---|---|---|---|---|---|---|
| Government of Nepal<br>Ministry of Physical Infrastructure and Transport<br>**Department of Roads**<br>**Development Cooperation Implementation Division** | Nepal India Regional Trade and Transport Project (NIRTTP)<br>(IDA CREDIT No. 5273 - NEP)<br>Detailed Design for Improvement of Kathmandu (Nagdhunga) - Naubise - Mugling Road and Bridges | Intercontinental Consultants & Technocrats Pvt. Ltd.<br>A-8, Green Park, New Delhi - 110016<br>Ph : 4086-3000, Fax 2685-5252<br>In Joint Venture With<br>Soosung Engineering Co. Ltd., South Korea<br>FBC<br>In Association With<br>Full Bright Consultancy (Pvt.) Ltd.<br>316,Baburam Acharya Sadak<br>Sinamangal, Kathmandu, GPO Box: 4970, Kathmandu, Nepal | Designed By | SB | | **DRAWING NAME:**<br>RCC RETAINING WALL (5,6 & 7m HEIGHT)<br>BAR BENDING SCHEDULE | **Scale:**<br>AS SHOWN | **Date:**<br>August 2019 |
| | | | Checked By | PMS | | | | **Drawing No.:**<br>NNMR-TYP 06 -05 |
| | | | Approved By | BNS | | | | |

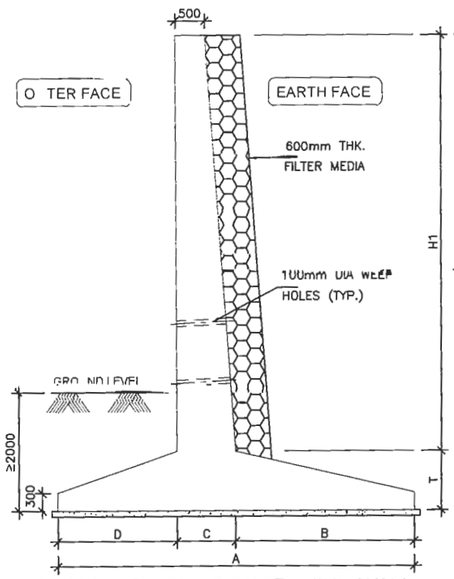


TYPICAL SECTION OF RETAINING WALL
(DIMENSIONAL DETAILS)
(SCALE 1:60)

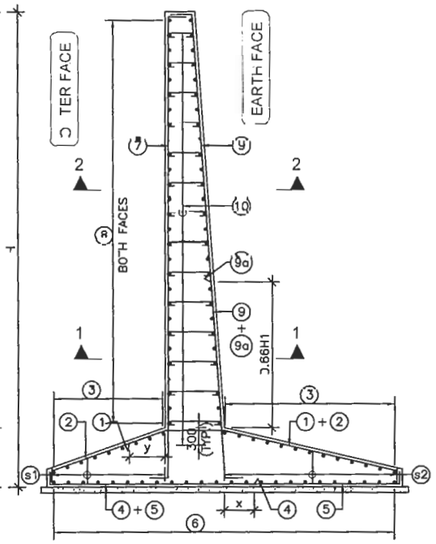


TYPICAL SECTION OF RETAINING WALL
(REINFORCEMENT DETAILS)
(SCALE 1:60)

x=Ld or B/3 WHICHEVER IS MAXIMUM
y=Ld or D/3 WHICHEVER IS MAXIMUM

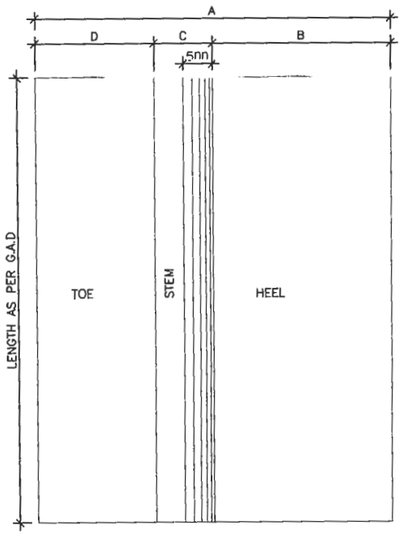


TYPICAL PLAN OF RETAINING WALL
(DIMENSIONAL DETAILS)
(SCALE 1:60)

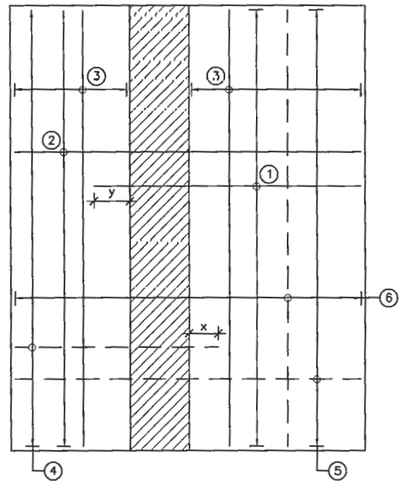


TYPICAL PLAN OF RETAINING WALL
(REINFORCEMENT DETAILS)
(SCALE 1:60)

## REINFORCEMENT SCHEDULE

| BAR MRKD. | SHAPE | TOTAL 8.0m HEIGHT | TOTAL 9.0m HEIGHT | TOTAL 10.0m HEIGHT | TOTAL 11.0m HEIGHT | TOTAL 12.0m HEIGHT | TOTAL 13.0m HEIGHT | TOTAL 14.0m HEIGHT | TOTAL 15.0m HEIGHT |
|---|---|---|---|---|---|---|---|---|---|
| 1 | | 20 ø@200c/c | 25 ø@200c/c | 25 ø@180c/c | 25 ø@250c/c | 25 ø@250c/c | 25 ø@200c/c | 25 ø@200c/c | 25 ø@200c/c |
| 2 | | 20 ø@200c/c | 20 ø@200c/c | 20 ø@180c/c | 20 ø@250c/c | 20 ø@250c/c | 20 ø@200c/c | 20 ø@200c/c | 20 ø@200c/c |
| 3 | | 12 ø@150c/c | 16 ø@150c/c | 16 ø@150c/c | 16 ø@200c/c | 16 ø@200c/c | 16 ø@200c/c | 16 ø@200c/c | 16 ø@200c/c |
| 4 | | 25 ø@200c/c | 32 ø@200c/c | 32 ø@180c/c | 32 ø@200c/c | 32 ø@200c/c | 32 ø@200c/c | 32 ø@170c/c | 32 ø@170c/c |
| 5 | | 25 ø@200c/c | 25 ø@200c/c | 25 ø@180c/c | 25 ø@200c/c | 25 ø@200c/c | 25 ø@200c/c | 25 ø@170c/c | 25 ø@170c/c |
| 6 | | 16 ø@150c/c | 16 ø@150c/c | 16 ø@100c/c | 16 ø@100c/c | 16 ø@100c/c | 16 ø@100c/c | 16 ø@100c/c | 16 ø@100c/c |
| 7 | | 16 ø@200c/c | 16 ø@200c/c | 20 ø@200c/c | 20 ø@200c/c | 20 ø@180c/c | 25 ø@180c/c | 25 ø@170c/c | 25 ø@170c/c |
| 8 | | 16 ø@200c/c | 16 ø@150c/c | 16 ø@150c/c | 16 ø@150c/c | 16 ø@125c/c | 16 ø@125c/c | 16 ø@125c/c | 16 ø@125c/c |
| 9 | | 25 ø@200c/c | 32 ø@200c/c | 32 ø@200c/c | 32 ø@200c/c | 32 ø@180c/c | 32 ø@180c/c | 32 ø@170c/c | 32 ø@170c/c |
| 9a | | 32 ø@200c/c | 32 ø@200c/c | 32 ø@200c/c | 32 ø@200c/c | 32 ø@180c/c | 32 ø@180c/c | 32 ø@170c/c | 32 ø@170c/c |
| 10 | | 8 ø @400c/c | 8 ø @300c/c | 8 ø @300c/c | 8 ø @300c/c | 8 ø @250c/c | 8 ø @250c/c | 8 ø @250c/c | 8 ø @250c/c |
| 11 | | 10 ø@150c/c | 10 ø@150c/c | 16 ø@150c/c | 16 ø@150c/c | 16 ø@150c/c | 16 ø@150c/c | 16 ø@150c/c | 16 ø@150c/c |
| s1 | | – | – | – | – | – | – | – | – |
| s2 | | – | – | – | 2L–12 ø @200c/c | 2L–12 ø @200c/c | 2L–12 ø @200c/c | 2L–12 ø @200c/c | 2L–12 ø @200c/c |

## SCHEDULE OF SECTIONAL DIMENSIONS OF RETAINING WALLS OF DIFFERENT HEIGHTS

| SR. NO. | TOTAL HEIGHT (H) | | 8.0m | 9.0m | 10.0m | 11.0m | 12.0m | 130m | 14.0m | 15.0m |
|---|---|---|---|---|---|---|---|---|---|---|
| 1 | BASE WIDTH | A | 7.05 | 8.0 | 9.2 | 9.4 | 10 | 11.1 | 12.5 | 13.1 |
| 2 | HEEL | B | 3.5 | 3.9 | 4.3 | 4.3 | 4.7 | 5.1 | 5.5 | 5.7 |
| 3 | STEM | C | 0.75 | 0.8 | 1.0 | 1.2 | 1.3 | 1.5 | 1.7 | 2 |
| 4 | TOE | D | 2.8 | 3.3 | 3.9 | 3.9 | 4 | 4.5 | 5.3 | 5.4 |
| 5 | BASE THK. | T | 0.75 | 0.8 | 1.0 | 1.2 | 1.3 | 1.5 | 1.7 | 2 |
| 6 | BASE PRESSURE | | 18T/m² | | | 25T/m² | | | | |

(DIMENSIONS GIVEN IN THE TABLE ARE IN METRES)

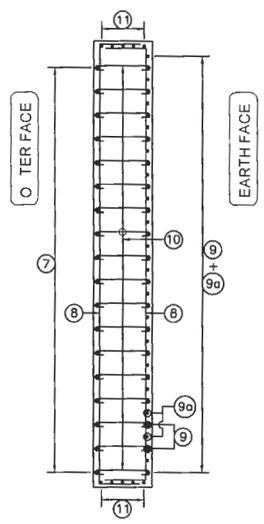


SECTION 1-1
(SCALE 1:60)

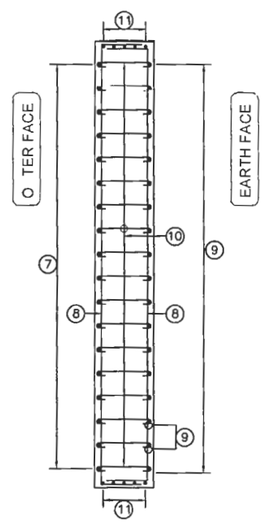


SECTION 2-2
(SCALE 1:60)

## NOTES:-

1. ALL DIMENSIONS ARE IN mm UNLESS OTHERWISE MENTIONED. ONLY WRITTEN DIMENSIONS ARE TO BE FOLLOWED. NO DIMENSION IS TO BE SCALED.
2. THE CONCRETE GRADE SHALL BE M30.
3. UNTENSIONED REINFORCEMENT SHALL BE THERMO MECHANICALLY TREATED (TMT), HYSD BARS OF GRADE DESIGNATION Fe–500D CONFORMING TO IS: 1786.
4. CLEAR COVER TO OUTER MOST STEEL SHALL BE AS UNDER:–
   i) EARTH FACE –75mm.
   ii) NON EARTH FACE –50mm.
5. 100mm DIA WEEP HOLES AT 1000mm C/C STAGGERED HORIZONTALLY AND VERTICALLY SHALL BE PROVIDED IN TWO LAYERS ABOVE G.L IN VERTICAL WALLS OF RETAINING WALLS.
6. LAYING, COMPACTION AND EXTENT OF BACKFILL BEHIND MEDIAN WALLS/ RETAINING WALLS SHALL CONSIST OF SELECTED EARTH CONFORMING TO APPENDIX.0 OF IRC:78 2014 HAVING PROPERTIES C=0, ø– 30°, δ–22.5° & γd = 20 KN/M³.
7. LAPPING OF REINFORCEMENT SHALL BE AVOIDED AS FAR AS POSSIBLE. IN CASE LAPPING OF BARS BECOMES UNAVOIDABLE, MINIMUM LAP LENGTH OF REINFORCEMENT BARS SHALL BE CALCULATED AS FOLLOW WITH MAXIMUM ALLOWABLE LAPPING (p) OF 50% ONLY.
   (IRC:112–2011) (CLAUSE:15.2.5.1)
   LAP LENGTH ls = α1.lbnet
   α1 = 1.0 FOR p%≤25%
   α1 = 1.15 FOR 25%≤p%≤33%
   α1 = 1.4 FOR 33%≤p%≤50%
   IN THE CASE OF BUNDLED BARS
   LAP LENGTH = 1.3x ls(CLAUSE:15.2.7.3)
   (IRC:112–2011) (CLAUSE:15.2.3.3)
   DEVELOPMENT LENGTH (lbnet OR Ld)
   lbnet = α.lb (α = 1.0)
   lb = kø
   k = 40 FOR M30 (Fe500D)
   FOR UNFAVORABLE BOND CONDITION THE lb SHOULD BE MULTIPLIED BY FACTOR OF 1.43.
   FOR ø>32mm lb, SHOULD BE INCREASED BY MULTIPLYING FACTOR $(\frac{100-ø}{132-ø})$
8. SAFE BEARING CAPACITY OF SOIL AT FOUNDATION LEVEL SHALL NOT BE LESS THAN THAT GIVEN IN THE TABLE.
9. TO COUNTER FOR THE DEFLECTION RETAINING WALL SHALL BE CONSTRUCTED TILTED BACK BY 1 IN 100.
10. THIS DRAWING SHALL BE READ IN CONJUNCTION WITH THE GENERAL ARRANGEMENT DRAWING OF THE RESPECTIVE BRIDGES.

SURFACE BAR SHALL BE PROVIDED IN FOOTING AT 12Ø@150c/c WHEREVER REQUIRED

| EMPLOYER | PROJECT | DESIGN CONSULTANT | | | | | |
|---|---|---|---|---|---|---|---|
| Government of Nepal<br>Ministry of Physical Infrastructure and Transport<br>**Department of Roads**<br>**Development Cooperation Implementation Division** | Nepal India Regional Trade and Transport Project<br>(NIRTTP)<br>(IDA CREDIT No. 5273 - NEP)<br>Detailed Design for Improvement of Kathmandu (Nagdhunga) - Naubise - Mugling Road and Bridges | Intercontinental Consultants & Technocrats Pvt. Ltd.<br>A-8, Green Park, New Delhi - 110016<br>Ph : 4086-3000, Fax 2685-5252<br>In Joint Venture With<br>Soosung Engineering Co. Ltd., South Korea | In Association With<br>Full Bright Consultancy (Pvt.) Ltd.<br>316,Baburam Acharya Sadak<br>Sinamangal, Kathmandu, GPO Box: 4970, Kathmandu, Nepal | Designed By | SB | **DRAWING NAME:**<br>RCC RETAINING WALL | **Scale:**<br>AS SHOWN |
| | | | | Checked By | PMS | | **Date:**<br>August 2019 |
| | | | | Approved By | BNS | | **Drawing No.:**<br>NNMR-TYP 06 -06 |

## Semi-flexible 3d galvani□ed mat details

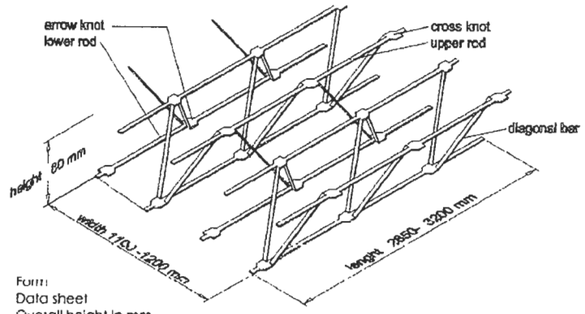


| | |
|---|---|
| A | Form |
| 02 | Data sheet |
| 80 | Overall height in mm |
| FE | Material - steel |
| Z | Corrosion protection - zinc |

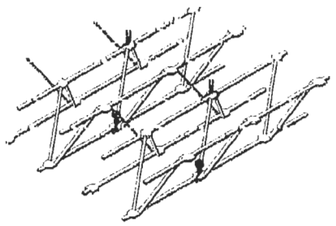

| | |
|---|---|
| Material | at least 275 g/m² galvanized steel sheet band, thickness 1.5 – 1.6 mm |
| Panel size | width 1.100 - 1200 mm<br>length 2.850 - 3200 mm<br>height 80 mm |
| Weight | approx. 3.0 kg/m² to 3.33 kg/m² or 10.8 kg/panel to 12.8 kg/panel corresponding to the thickness of sheet steel used (1.5 or 1.6 mm) |
| Approx. loading values | Steel S 350 GD model<br>Evenly distributed load if knots are fixed: approx. 30 kN/m²<br>Maximum tensile strength of J.K.S. lengthwise 70 kN/m |

□-Clamp for Joining Distribution Bars

## Details of Layer Construction of 3D Semi-Flexible Mat (Schematic)

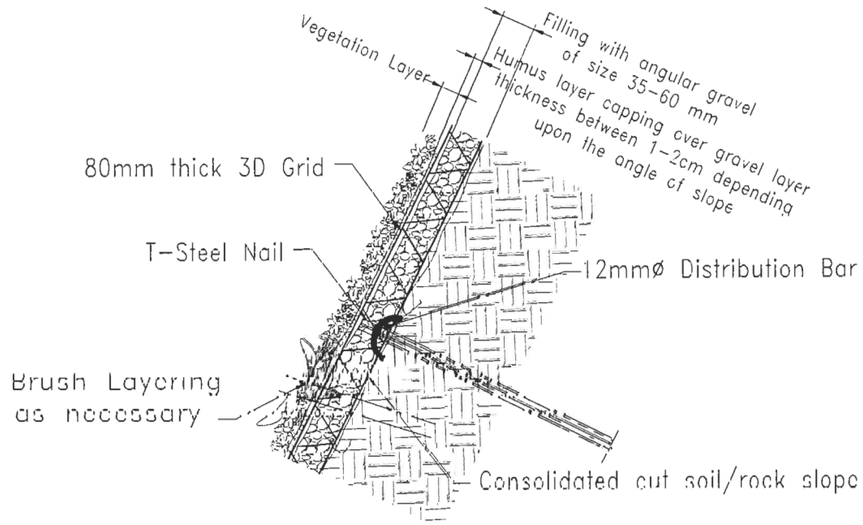


## Details of T-steel Nail

Length varies from 1.2m to 3.0m

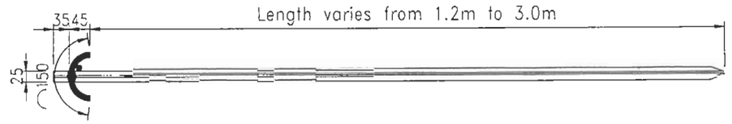


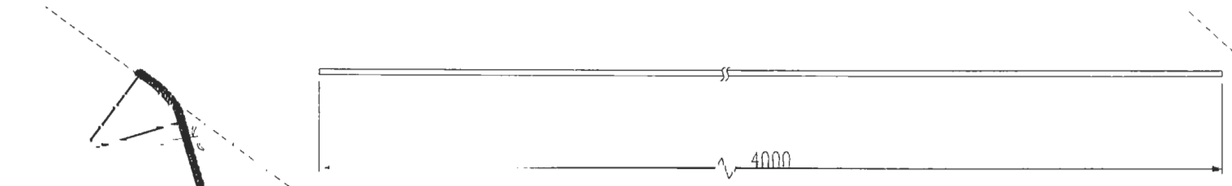


12mm Ø Distribution Bar

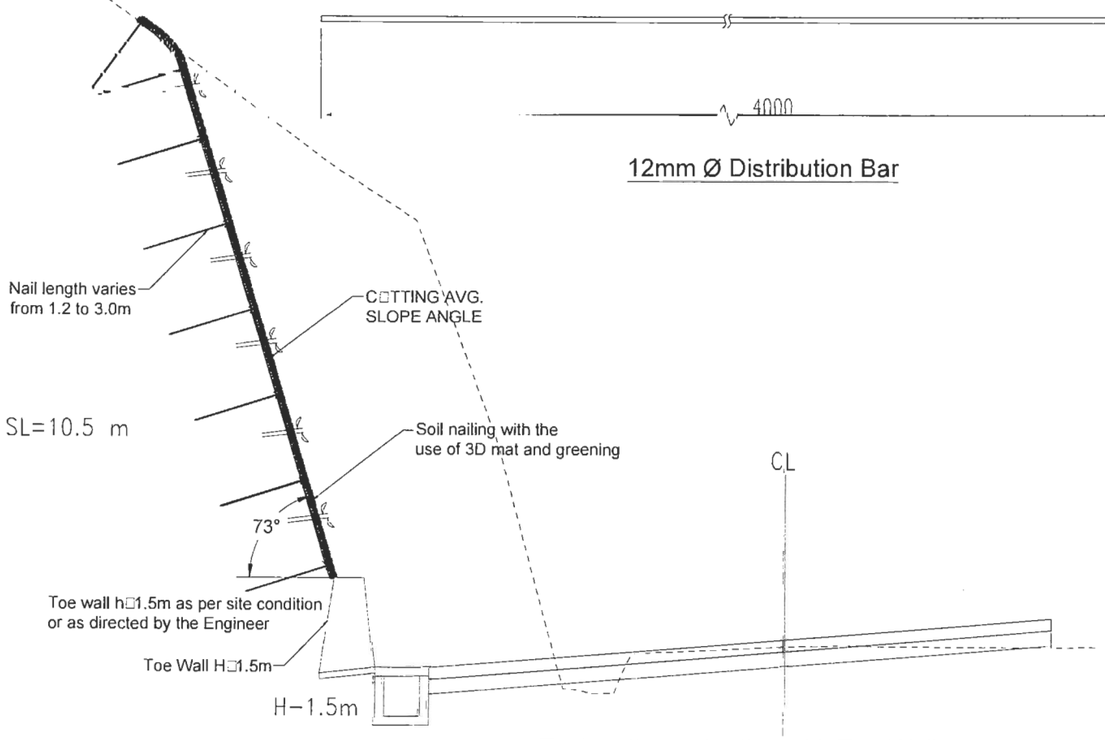


Typical Cross Section with Toe Wall

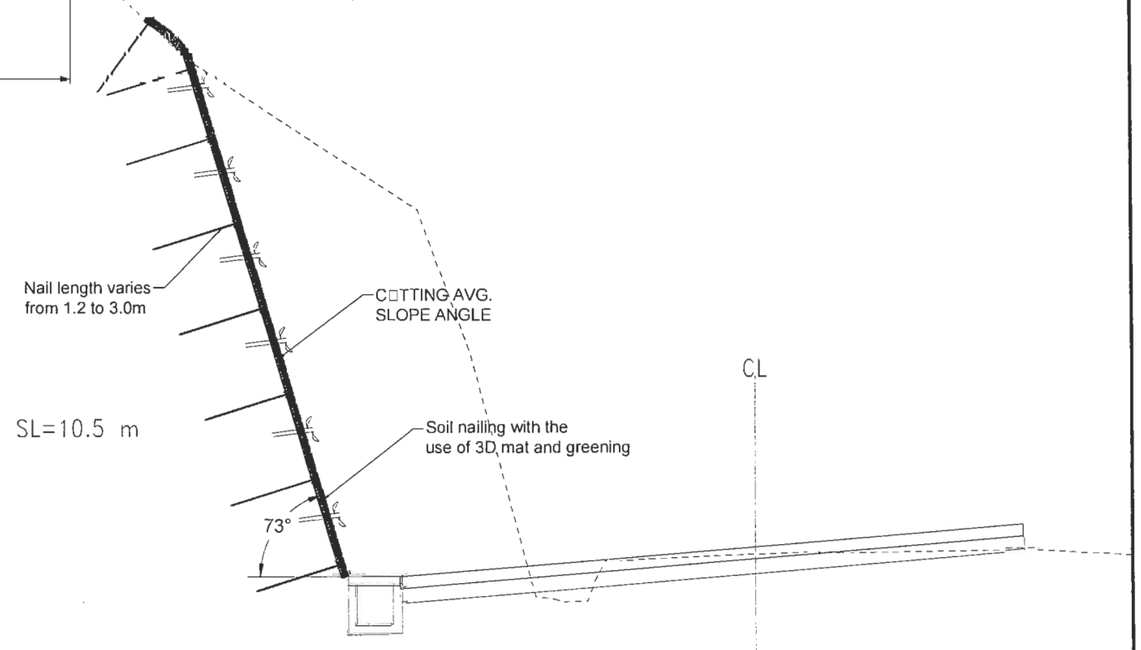


Typical Cross Section

| EMPLOYER | PROJECT | DESIGN CONSULTANT | | | | | |
|---|---|---|---|---|---|---|---|
| Government of Nepal<br>Ministry of Physical Infrastructure and Transport<br>**Department of Roads**<br>**Development Cooperation Implementation Division** | Nepal India Regional Trade and Transport Project (NIRTTP)<br>(IDA CREDIT No. 5273 - NEP)<br>Detailed Design for Improvement of Kathmandu (Nagdhunga) - Naubise - Mugling Road and Bridges | Intercontinental Consultants & Technocrats Pvt. Ltd.<br>A-8, Green Park, New Delhi - 110016<br>Ph : 4086-3000, Fax 2685-5252<br>In Joint Venture With<br>Soosung Engineering Co. Ltd., South Korea | In Association With<br>Full Bright Consultancy (Pvt.) Ltd.<br>316,Baburam Acharya Sadak<br>Sinamangal, Kathmandu, GPO Box: 4970, Kathmandu, Nepal | Designed By | SB | | **DRAWING NAME:**<br>NAGDH□NGA-NA□BISE SECTION<br>SEMI-FLEXIBLE 3D GALVANI□ED STEEL MAT | **Scale:**<br>Not to Scale | **Date:**<br>August 2019 |
| | | | | Checked By | PMS | | | | **Drawing No.:**<br>NNR-TYP-06-07 |
| | | | | Approved By | BNS | | | | |

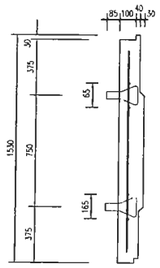


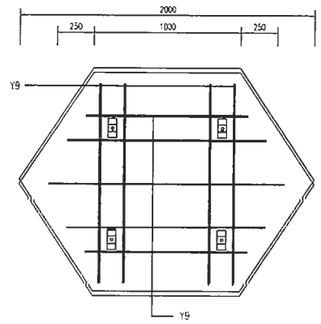


TYPICAL ELEVATION OF ANCHORED EARTH CONCRETE FACING PANEL(MP4)

SCALE 1:20

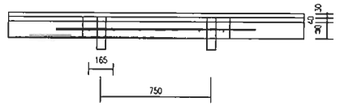


PLAN

SCALE 1:20

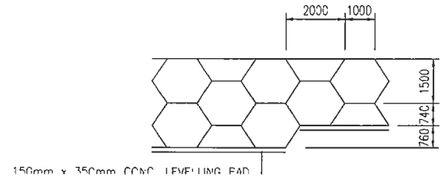


TYPICAL STEP DETAIL '2'

SCALE 1:100

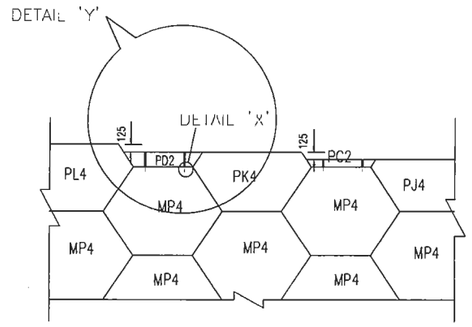


PRECAST CONC. FACING PANEL DETAIL '5A'

SCALE 1:50

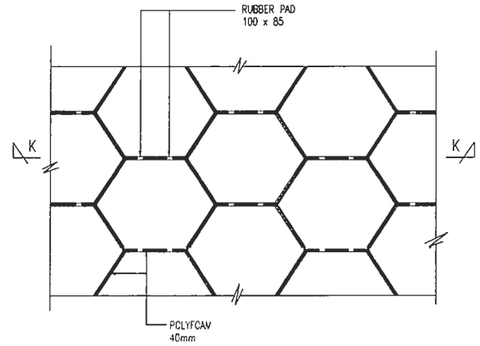


JOINT MATERIAL DETAILS

SCALE 1:50

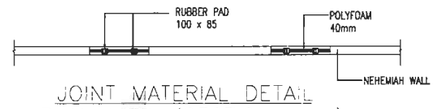


JOINT MATERIAL DETAIL
PLAN VIEW (SECTION K-K)

SCALE 1:50

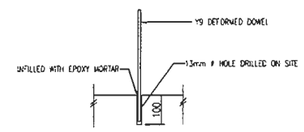


DETAIL 'X'

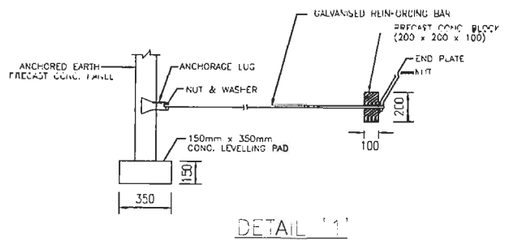


DETAIL '1'

SCALE 1:20

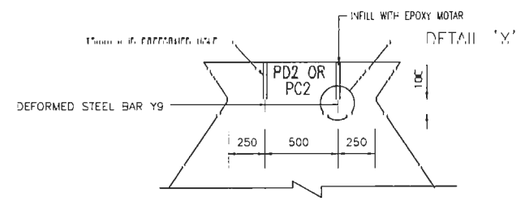


DETAIL 'Y'

SCALE 1:20

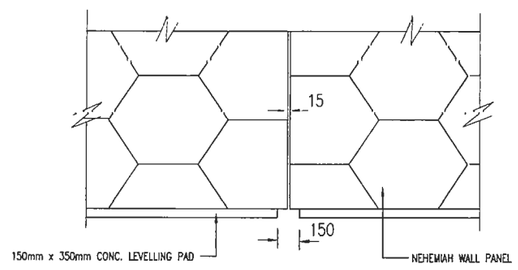


VERTICAL JOINT DETAIL '3A'(ELEVATION VIEW)

N.T.S

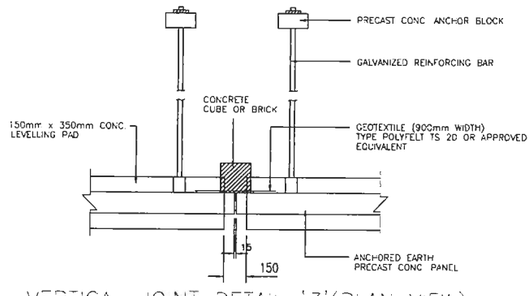


VERTICAL JOINT DETAIL '3'(PLAN VIEW)

SCALE 1:20

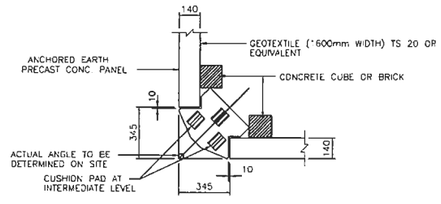


CORNER UNIT DETAIL '4'

SCALE 1:20

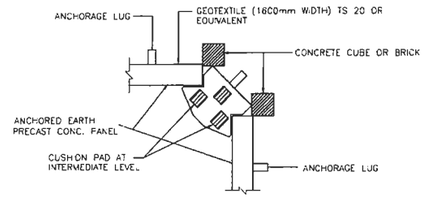


CORNER UNIT DETAIL '6'

SCALE 1:20

PRELIMINARY 16th FEBRUARY 2017

Anchored earth® is a registered trade mark and patented retaining wall system licensed to Nehemiah Reinforced Soil Sdn. Bhd. This drawing is copyright and must not be reproduced, copied, transmitted or used without permission

NOTES :

1. LEGEND

1.1 PRECAST CONCRETE FACING PANELS ARE GENERALLY DESCRIBED AS FOLLOWS : TYPE/NO. OF TIE POINTS (e.g. MP4,PB2)

1.2 PANEL THICKNESS SHALL BE INDICATED AS FOLLOWS :

140mm
180mm
220mm

1.3 MINIMUM COVER FOR REINFORCEMENT IN AE PANEL IS 40mm

1.4 ALL DIMENSION ARE IN mm UNLESS OTHERWISE STATED.

2. GENERAL

2.1 THESE DRAWINGS ARE TO BE READ IN CONJUNCTION WITH ALL OTHER DRAWINGS AND DOCUMENTS RELATED TO THIS PROJECT.

2.2 ALL MATERIALS AND WORKMANSHIP SHALL BE IN ACCORDANCE WITH THE TECHNICAL SPECIFICATION OF NEHEMIAH REINFORCED SOIL SDN. BHD. FOR ANCHORED EARTH WALL

2.3 ALL SETTING OUT OF DIMENSIONS, ALIGNMENT AND LEVELS ARE TO BE VERIFIED BEFORE COMMENCEMENT OF WORK.

3. MATERIALS

3.1 FACING PANELS, REINFORCEMENT STEEL, RUBBER PAD, FOAM, BOLTS AND NUTS SHALL COMPLY WITH SPECIFICATIONS.

3.2 BACKFILL MATERIAL WITHIN THE ANCHORED EARTH BLOCK SHALL BE SELECTED GRANULAR MATERIAL, TESTED AND APPROVED BY S.O. IF COHESIVE FRICTIONAL [illegible] NEHEMIAH REINFORCED SOIL SDN. BHD.

3.3 NO PLASTIC OR OTHER POLYMER MATERIAL SHALL BE USED AS REINFORCEMENT FOR PERMANENT STRUCTURE.

4. DESIGN

4.1 THE LIVE LOAD ASSUMED FOR THE DESIGN IS 20 kN/m²

4.2 MATERIAL PROPERTIES ADOPTED FOR DESIGN :

PRECAST CONCRETE PANELS Fcu = 30 MPa
REINFORCING BARS Fy = 500 MPa

SELECTED BACKFILL MATERIAL :
DENSITY = 20 kN/m³
ø1(EFFECTIVE) = 36° C1 = 0 kN/m²

RETAINED FILL BEHIND :
DENSITY = 20 kN/m³
ø2(EFFECTIVE) = 30° C2 = 0 kN/m²

FOUNDATION SOIL :
DENSITY = 20 kN/m³ ø3 = 30° C3 = 5 kN/m²

4.3 SEISMIC CONDITION, $a_g$ = 0.22

| EMPLOYER | PROJECT | DESIGN CONSULTANT | | | | | |
|---|---|---|---|---|---|---|---|
| Government of Nepal<br>Ministry of Physical Infrastructure and Transport<br>**Department of Roads**<br>**Development Cooperation Implementation Division** | Nepal India Regional Trade and Transport Project (NIRTTP)<br>(IDA CREDIT No. 5273 - NEP)<br>Detailed Design of Kathmandu (Nagdhunga) -Naubise - Mugling Road and Bridges | Intercontinental Consultants & Technocrats Pvt.Ltd.,<br>A-8, Green Park, New Delhi - 110016<br>Ph : 4086-3000, Fax 2685-5252<br>In Joint Venture With<br>Soosung Engineering Co. Ltd., South Korea<br>FBC<br>In Association With<br>Full Bright Consultancy (Pvt.) Ltd.<br>316,Baburam Acharya Sadak,<br>Sinamangal, Kathmandu, GPO<br>Box. 4970. Kathmandu, Nepal | Designed By | **SB** | DRAWING NAME: | Scale: | Date: August 2019 |
| | | | Checked By | **PMS** | REINFORCED EARTH STRUCTURE | 0 2.5 5.0 7.5 10.0 | Drawing No.: NNMR-TYP-06-08 |
| | | | Approved By | **BNS** | | | |

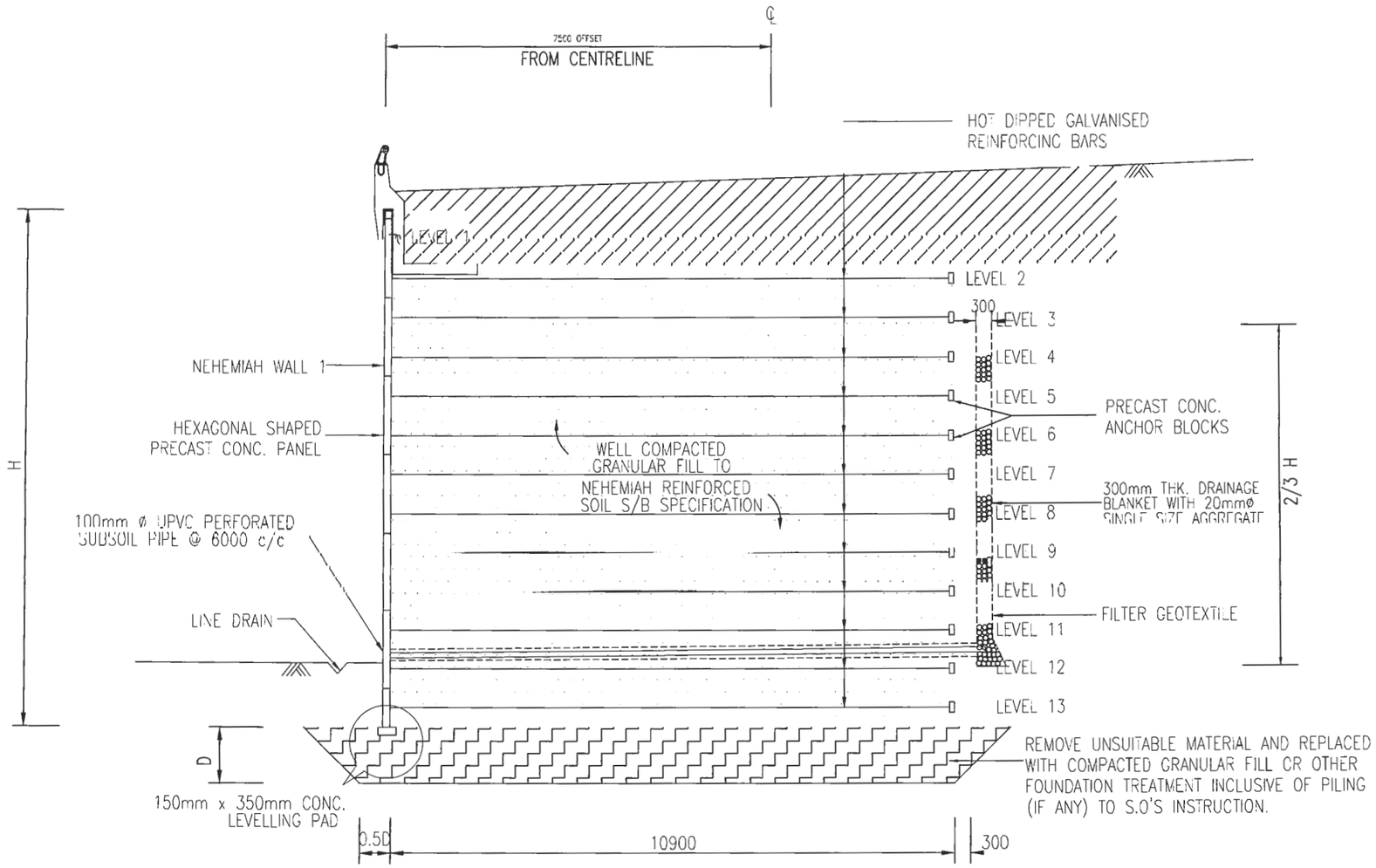


## TYPICAL CROSS SECTION OF REINFORCED EARTH STRUCTURE

| EMPLOYER | PROJECT | DESIGN CONSULTANT | | | | | | |
|---|---|---|---|---|---|---|---|---|
| Government of Nepal<br>Ministry of Physical Infrastructure and Transport<br>**Department of Roads**<br>**Development Cooperation Implementation Division** | Nepal India Regional Trade and Transport Project<br>(NIRTTP)<br>(IDA CREDIT No. 5273 - NEP)<br>Detailed Design for Improvement of Kathmandu (Nagdhunga) - Naubise - Mugling Road and Bridges | Intercontinental Consultants & Technocrats Pvt. Ltd.<br>A-8, Green Park, New Delhi - 110016<br>Ph : 4086-3000, Fax 2685-5252<br>In Joint Venture With<br>Soosung Engineering Co. Ltd., South Korea<br>FBC<br>In Association With<br>Full Bright Consultancy (Pvt.) Ltd.<br>316,Baburam Acharya Sadak<br>Sinamangal, Kathmandu, GPO<br>Box: 4970, Kathmandu, Nepal | Designed By | SB | | **DRAWING NAME:**<br>TYPICAL CROSS SECTION OF REINFORCED EARTH STRUCTURE | **Scale:**<br>0 0.5 1.0 1.5 2.0 | **Date:**<br>August 2019 |
| | | | Checked By | PMS | | | | **Drawing No.:**<br>NNMR-TYP 06-09 |
| | | | Approved By | BNS | | | | |

# BIO-ENGINEERING AND PROTECTION WORK

## PLANTING ON SLOPE <45 DEGREES

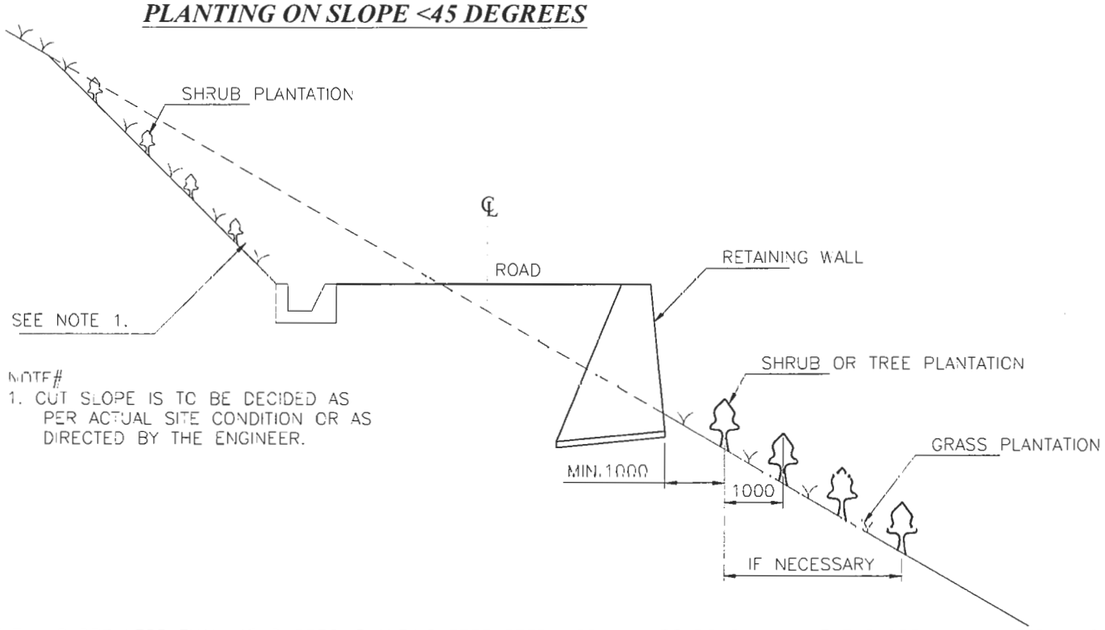


NOTE#
1. CUT SLOPE IS TO BE DECIDED AS PER ACTUAL SITE CONDITION OR AS DIRECTED BY THE ENGINEER.

IF THE SLOPE LESS THAN 45 DEGREE, PLANTING TREE SEEDLINGS WILL BE DONE ALONG THE SLOPE AT AN INTERVAL OF 1M C/C. BY DIGGING PITS 300MM. DIAMETER AND 300 MM. DEPTH. MIX COMPOST WITH SOIL UPTO 1/4 OF PIT VOLUME. IN BETWEEN THE TWO TERRACES, ROOTED GRASS SLIPS WILL BE PLANTED AT THE SPACING 100x100MM BY DIGGING PLANTING HOLES TO A MAXIMUM OF 50MM. DEPTH WITH METAL ROD OR WOOD PEG.

## BRUSH LAYERING ON SLOPE 30 - 45 DEGREES

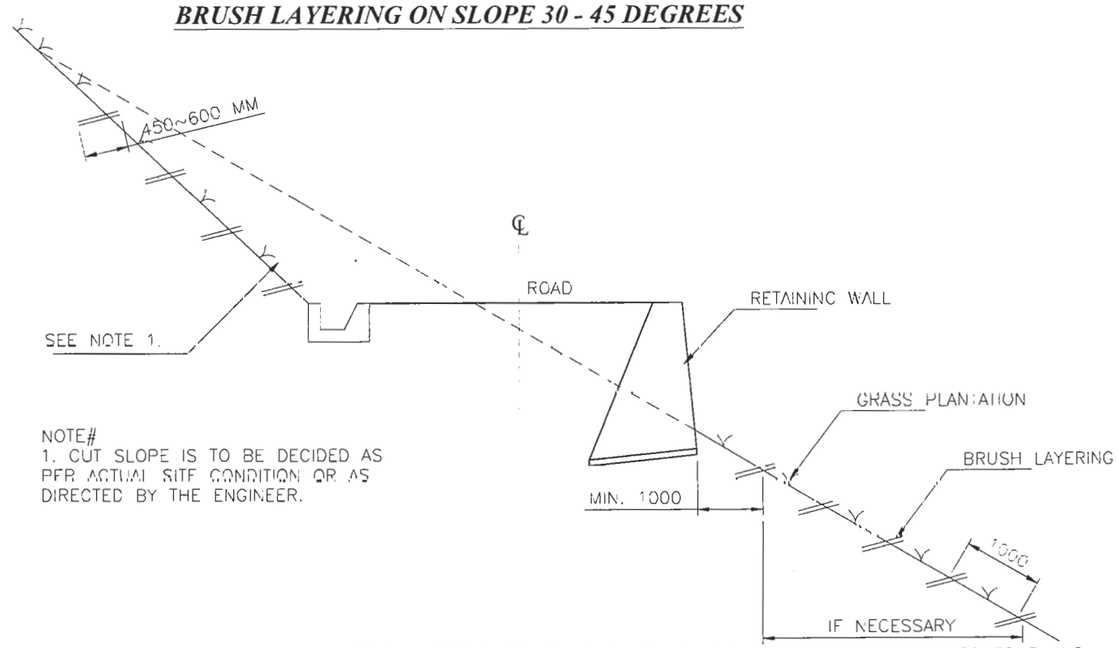


NOTE#
1. CUT SLOPE IS TO BE DECIDED AS PER ACTUAL SITE CONDITION OR AS DIRECTED BY THE ENGINEER.

IF THE SLOPE IN BETWEEN 30–45 DEGREE, TRENCHES ARE DUG UP TO 200MM. DEPTH ALONG THE CONTOUR AND LIVE BRANCHES OF CUTTINGS ARE PLACED WISE IN THE TRENCHES EXPOSING 1/3 OF THE TOTAL LENGTH ABOVE THE GROUND. IN THE SLOPE BETWEEN THE TWO TRENCHES, ROOTED GRASS SLIPS WILL BE PLANTED .

## PLANTING ON SLOPE >45 DEGREES

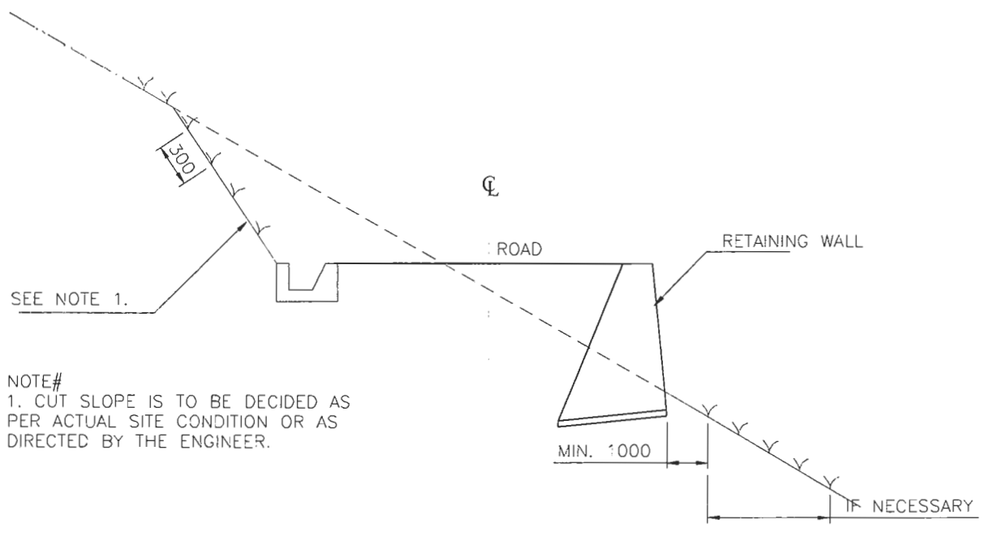


NOTE#
1. CUT SLOPE IS TO BE DECIDED AS PER ACTUAL SITE CONDITION OR AS DIRECTED BY THE ENGINEER.

IF THE SLOPE IN BETWEEN >45 DEGREE, ROOTED GRASS SLIPS WILL BE PLANTED AT THE SPACING OF 100MM. x 100MM. BY DIGGING HOLES TO A MAXIMUM OF 50MM. DEPTH WITH METAL ROD OR WOODEN PEG.

## PALISADES (LIVE STAKING ) ON SLOPE >45 DEGREE

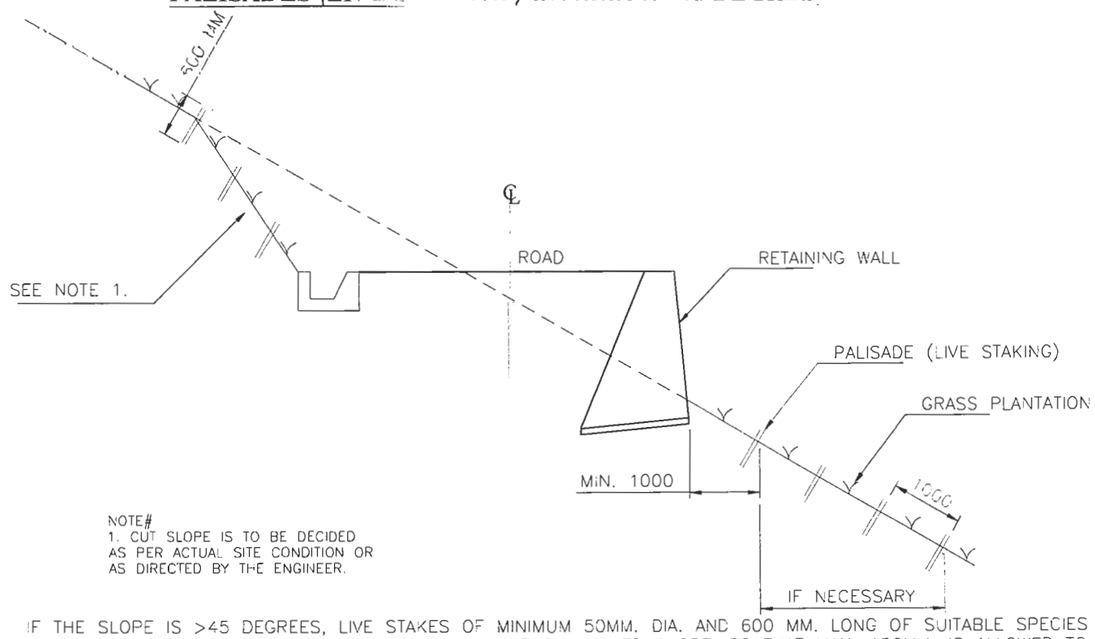


NOTE#
1. CUT SLOPE IS TO BE DECIDED AS PER ACTUAL SITE CONDITION OR AS DIRECTED BY THE ENGINEER.

IF THE SLOPE IS >45 DEGREES, LIVE STAKES OF MINIMUM 50MM. DIA. AND 600 MM. LONG OF SUITABLE SPECIES ARE DIPPED INTO THE GROUND AT RIGHT ANGLE TO THE INCLINED SLOPE, SO THAT MAX. 15CMM. IS ALLOWED TO STICK OUT OF THE GROUND. LIVE STAKES SHOULD BE SPACED AT 50MM. ALONG THE CONTOUR AND 1M. ALONG THE SLOPES. ON SLOPE IN BETWEEN THE LIVE STAKINGS, ROOTED GRASS SLIPS WILL BE PLANTED.

| EMPLOYER | PROJECT | DESIGN CONSULTANT | | | | | | |
|---|---|---|---|---|---|---|---|---|
| Government of Nepal<br>Ministry of Physical Infrastructure and Transport<br>**Department of Roads**<br>**Development Cooperation Implementation Division** | Nepal India Regional Trade and Transport Project<br>(NIRTTP)<br>(IDA CREDIT No. 5273 - NEP)<br>Detailed Design for Improvement of Kathmandu (Nagdhunga) - Naubise - Mugling Road and Bridges | Intercontinental Consultants & Technocrats Pvt. Ltd.<br>A-8, Green Park, New Delhi - 110016<br>Ph : 4086-3000, Fax 2685-5252<br>In Joint Venture With<br>Soosung Engineering Co. Ltd., South Korea | In Association With<br>Full Bright Consultancy (Pvt.) Ltd.<br>316,Baburam Acharya Sadak<br>Sinamangal, Kathmandu, GPO<br>Box: 4970, Kathmandu, Nepal | Designed By | SB | | **DRAWING NAME:**<br>TYPICAL BIO - ENGINEERING | **Scale:**<br>NOT TO SCALE | **Date:**<br>August 2019 |
| | | | | Checked By | PMS | | | | **Drawing No.:**<br>NNMR-TYP 07-01 |
| | | | | Approved By | BNS | | | | |

## COMBINED BREASTWALL WITH BIOENGINEERING WORKS ON BACKFILL AND CUT SLOPE.

### PLAN

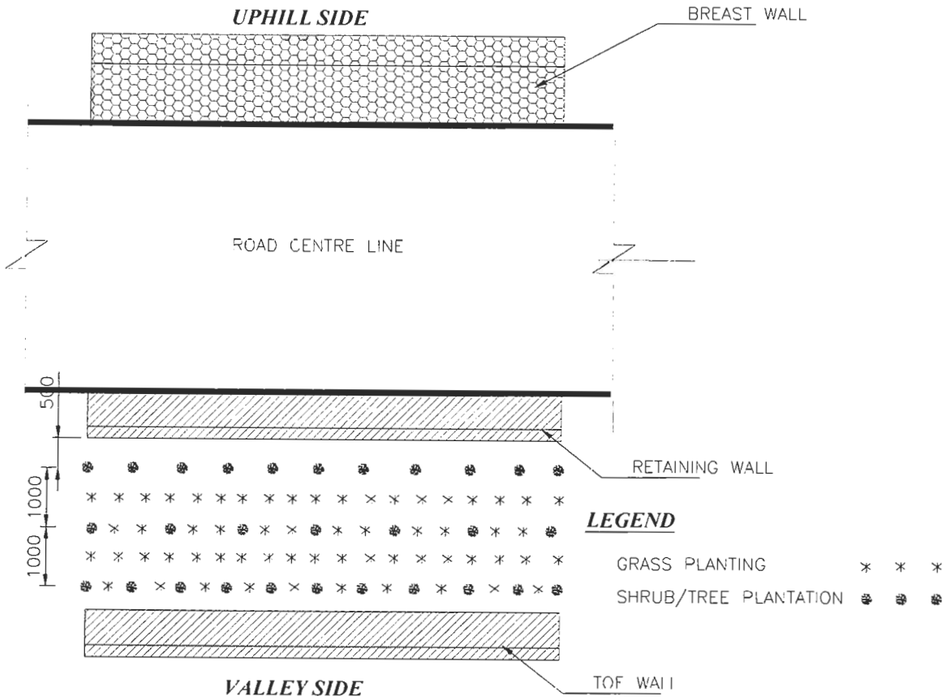


### SECTION/PROFILE

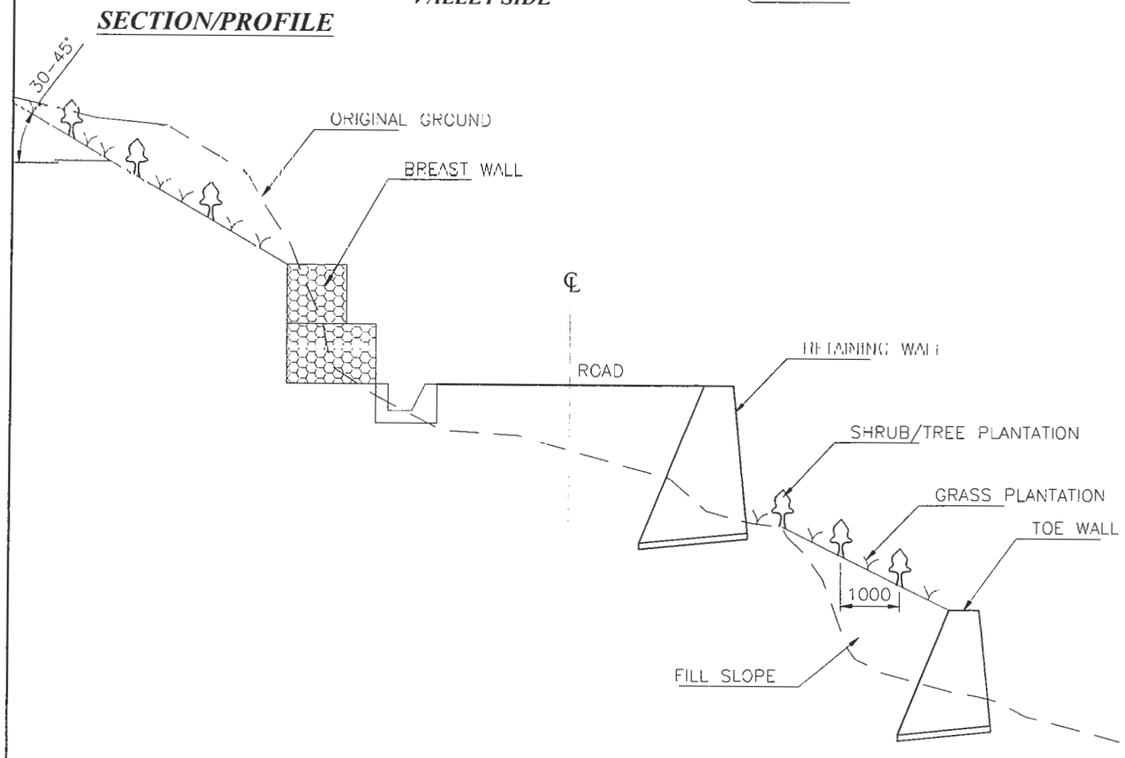


## BIOENGINEERING WORKS ON FILL SLOPE.

### PLAN

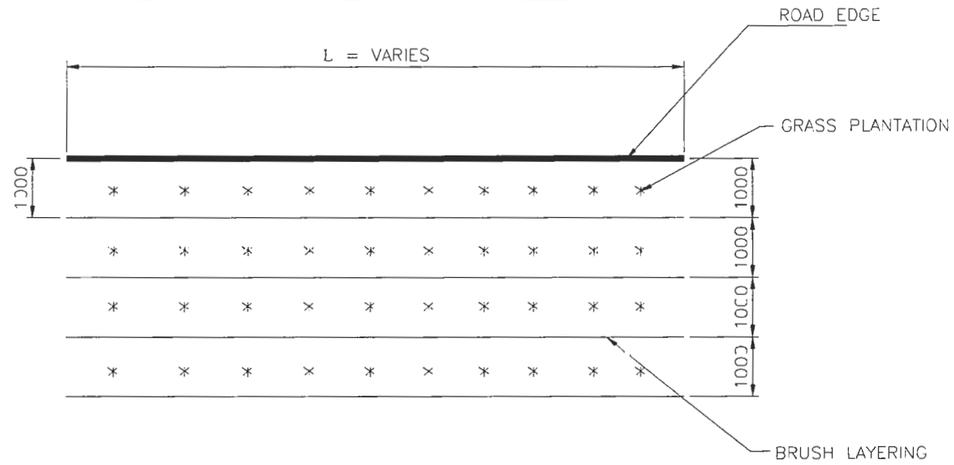


### LEGEND

GRASS PLANTATION * * *

BRUSH LAYERING ———

### SECTION/PROFILE

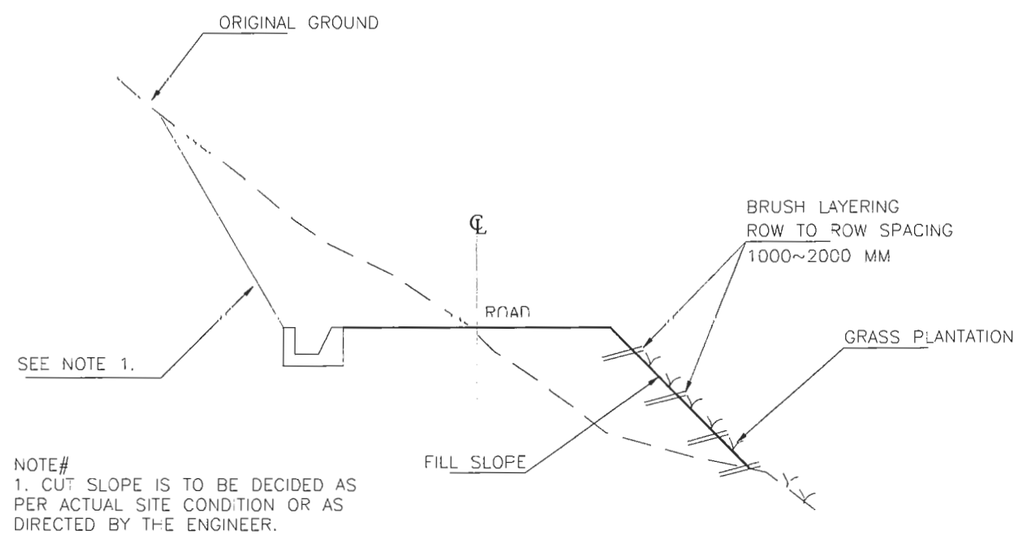


NOTE#
1. CUT SLOPE IS TO BE DECIDED AS PER ACTUAL SITE CONDITION OR AS DIRECTED BY THE ENGINEER.

| EMPLOYER | PROJECT | DESIGN CONSULTANT | | | | DRAWING NAME: | Scale: | Date: |
|---|---|---|---|---|---|---|---|---|
| Government of Nepal<br>Ministry of Physical Infrastructure and Transport<br>**Department of Roads**<br>**Development Cooperation Implementation Division** | Nepal India Regional Trade and Transport Project (NIRTTP)<br>(IDA CREDIT No. 5273 - NEP)<br>Detailed Design for Improvement of Kathmandu (Nagdhunga) - Naubise - Mugling Road and Bridges | Intercontinental Consultants & Technocrats Pvt. Ltd.<br>A-8, Green Park, New Delhi - 110016<br>Ph : 4086-3000, Fax 2685-5252<br>In Joint Venture With<br>Soosung Engineering Co. Ltd., South Korea | In Association With<br>Full Bright Consultancy (Pvt.) Ltd.<br>316,Baburam Acharya Sadak<br>Sinamangal, Kathmandu, GPO Box: 4970, Kathmandu, Nepal | Designed By<br>Checked By<br>Approved By | SB<br>PMS<br>BNS | TYPICAL BIO - ENGINEERING | NOT TO SCALE | August 2019<br>**Drawing No.:**<br>NNMR-TYP 07-02 |

## GRASS PLANTING LINES, DIAGONAL

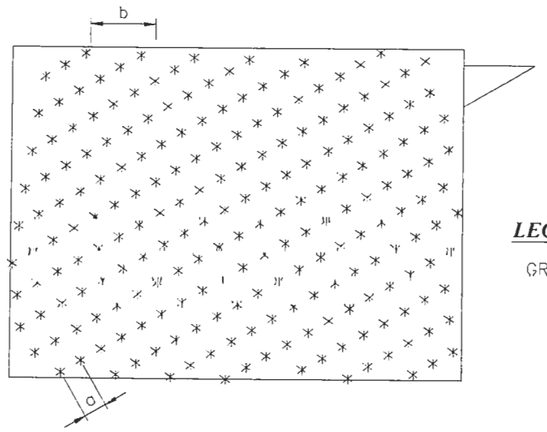


**LEGEND**

GRASS PLANTATION * * *

## GRASS PLANTING LINES, RANDOM

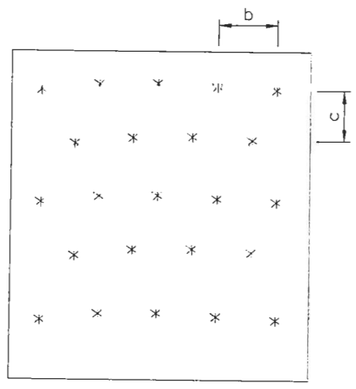


## GRASS PLANTING LINES, DOWN SLOPE

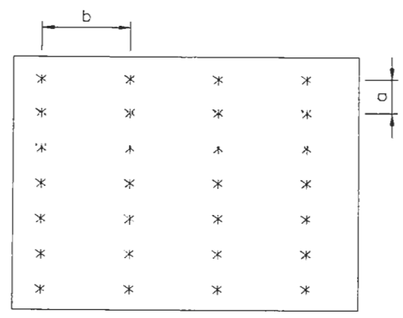


## GRASS PLANTING LINES CONTOUR/ HORIZONTAL, SLOPE <30°

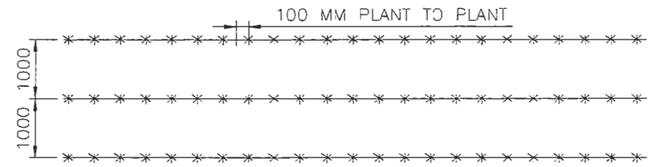


## 2. GRASS PLANTING LINES CONTOUR/ HORIZONTAL, SLOPE <30°-45°

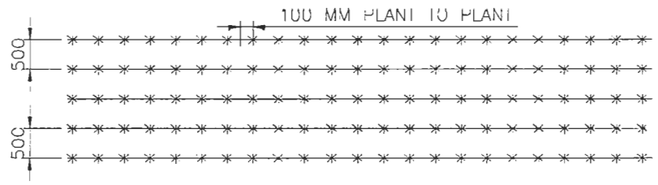


## 3. GRASS PLANTING LINES CONTOUR/ HORIZONTAL, SLOPE >45°

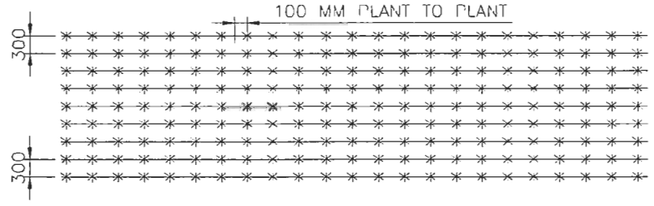


### A) CUT SLOPES

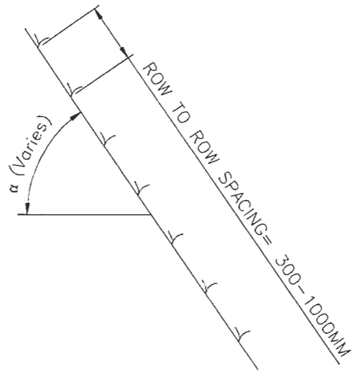


### B) VALLEY SLOPES

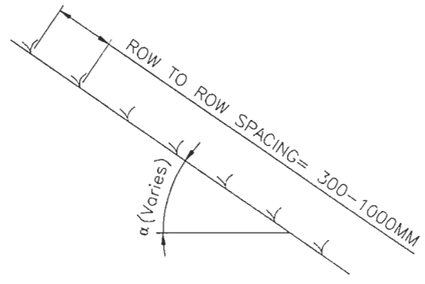


*SIDE VIEW OF GRASS PLANTATION*

### SPACING DETAIL FOR GRASS PLANTING

| Planting configuration | Slope steepness | Spacing | |
|---|---|---|---|
| | | Plant to Plant [a] | Row to Row [b] |
| Contour Lines | Slope less than 30° | 100 mm | 1000 mm |
| | Slope 30°-45° | 100 mm | 500 mm |
| | Slope more than 45° | 100 mm | 300 mm |
| Diagonal | Slopes less than 45° | 100 mm | 500 mm |
| | Slope more than 45° | 100 mm | 300 mm |
| Down slopes lines | All Slopes | 100 mm | 300 mm |
| Random lines | All Slopes | 100 mm | 100 mm |

| EMPLOYER | PROJECT | DESIGN CONSULTANT | | | | | |
|---|---|---|---|---|---|---|---|
| Government of Nepal<br>Ministry of Physical Infrastructure and Transport<br>**Department of Roads**<br>**Development Cooperation Implementation Division** | Nepal India Regional Trade and Transport Project (NIRTTP)<br>(IDA CREDIT No. 5273 - NEP)<br>Detailed Design for Improvement of Kathmandu (Nagdhunga) - Naubise - Mugling Road and Bridges | Intercontinental Consultants & Technocrats Pvt. Ltd.<br>A-8, Green Park, New Delhi - 110016<br>Ph : 4086-3000, Fax 2685-5252<br>In Joint Venture With<br>Soosung Engineering Co. Ltd., South Korea<br>FBC<br>In Association With<br>Full Bright Consultancy (Pvt.) Ltd.<br>316,Baburam Acharya Sadak<br>Sinamangal, Kathmandu, GPO Box: 4970, Kathmandu, Nepal | Designed By | SB | **DRAWING NAME:**<br>TYPICAL BIO - ENGINEERING | **Scale:**<br>NOT TO SCALE | **Date:**<br>August 2019 |
| | | | Checked By | PMS | | | **Drawing No.:**<br>NNMR-TYP 07-03 |
| | | | Approved By | BNS | | | |

## SHRUB/TREE PLANTING

### PIT SIZE

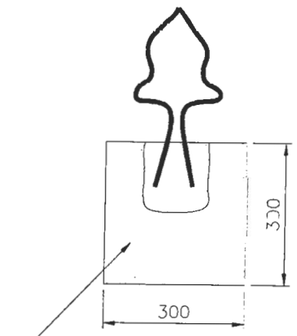


COMPOST VOLUME 1/4 OF VOLUME OF THE PIT MIXED WITH ORIGINAL SOIL.

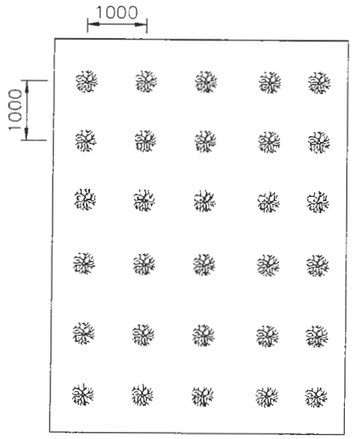


## BAMBOO RHIZOME PLANTING

### PIT SIZE

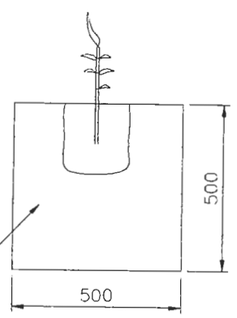


COMPOST VOLUME 1/4 OF VOLUME OF THE PIT MIXED WITH ORIGINAL SOIL.

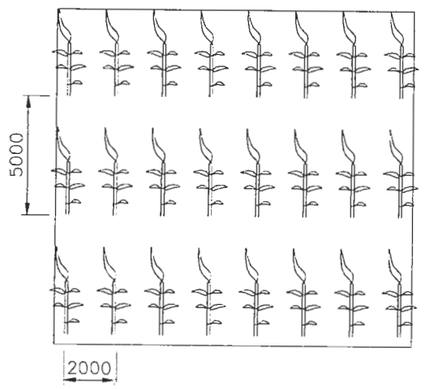


## BRUSH LAYERING /PALISADE

### BRUSH LAYERING

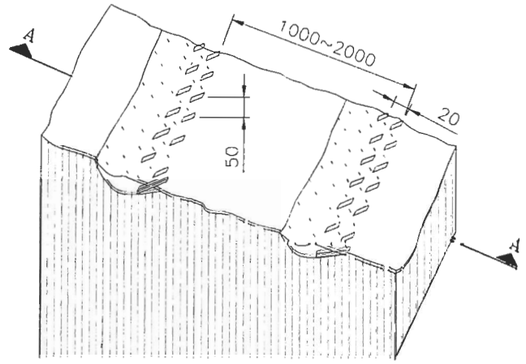


### PLAN VIEW

### SECTION

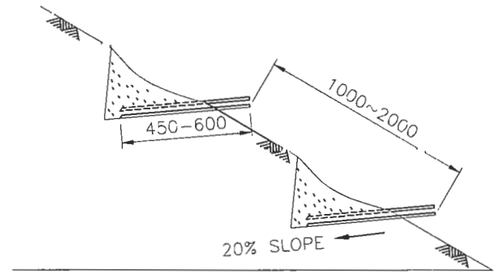


| SLOPE ANGLE | DISTANCE | |
|---|---|---|
| <30° | 2000 MM | TO BE LAID IN A DOUBLE LAYER WITH 21 CUTTINGS PER RUNNING METRE. |
| 30°-45° | 1000 MM | |
| | 1000 MM | PER RUNNING METRE. |

NOTE: TO BE USED IN SOFT SOIL/DEBRIS

### PALISADE

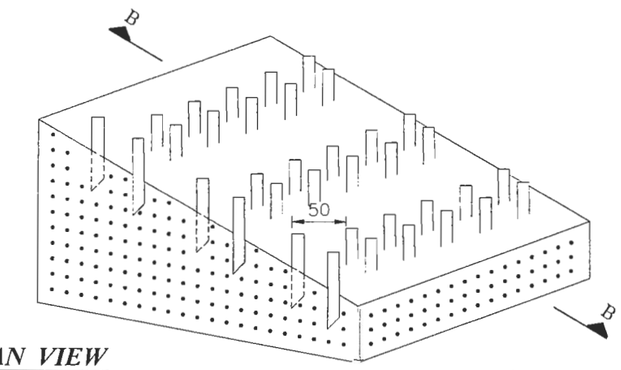


### PLAN VIEW

### SECTION

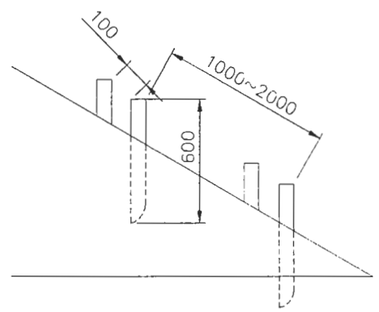


| SLOPE ANGLE | DISTANCE |
|---|---|
| <30° | 2000 MM |
| 30°-60° | 1000 MM |

NOTE: TO BE USED IN HARD SOIL

| EMPLOYER | PROJECT | DESIGN CONSULTANT | | | | | |
|---|---|---|---|---|---|---|---|
| Government of Nepal<br>Ministry of Physical Infrastructure and Transport<br>**Department of Roads**<br>**Development Cooperation Implementation Division** | Nepal India Regional Trade and Transport Project (NIRTTP)<br>(IDA CREDIT No. 5273 - NEP)<br>Detailed Design for Improvement of Kathmandu (Nagdhunga) - Naubise - Mugling Road and Bridges | Intercontinental Consultants & Technocrats Pvt. Ltd.<br>A-8, Green Park, New Delhi - 110016<br>Ph : 4086-3000, Fax 2685-5252<br>In Joint Venture With<br>Soosung Engineering Co. Ltd., South Korea<br>FBC | In Association With<br>Full Bright Consultancy (Pvt.) Ltd.<br>316,Baburam Acharya Sadak<br>Sinamangal, Kathmandu, GPO Box: 4970, Kathmandu, Nepal | Designed By | SB | | **DRAWING NAME:**<br>TYPICAL BIO - ENGINEERING |
| | | | | Checked By | PMS | | |
| | | | | Approved By | BNS | | |

| Scale: | Date: |
|---|---|
| NOT TO SCALE | August 2019 |
| | **Drawing No.:** NNMR-TYP 07-04 |

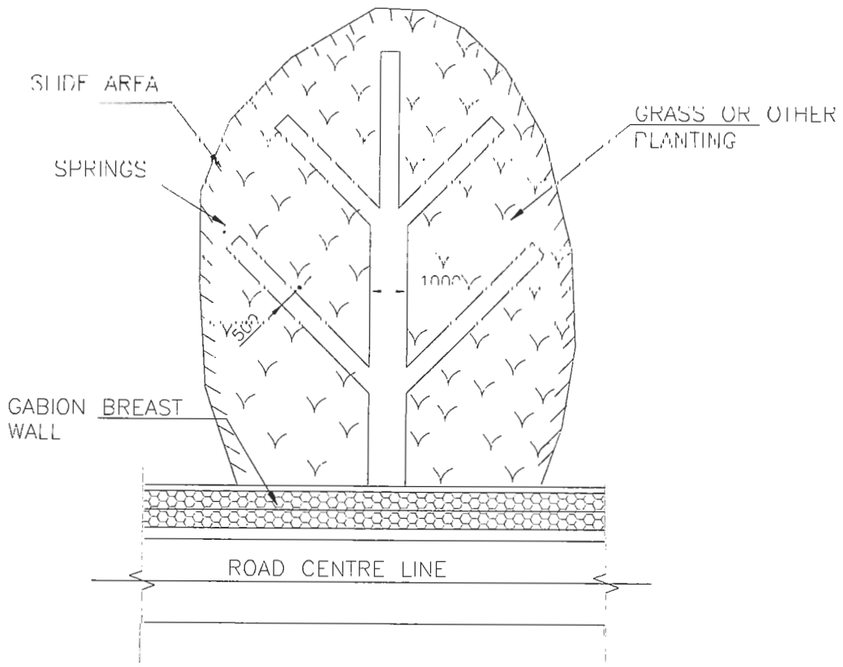


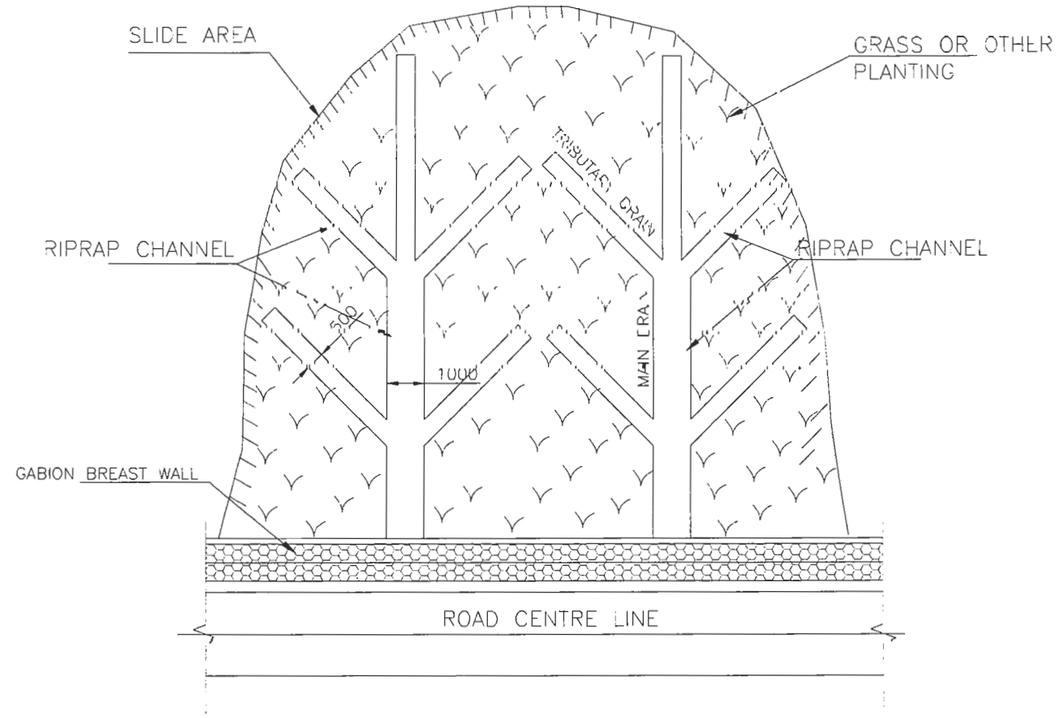


## *RIP-RAP CHANNEL SECTION*

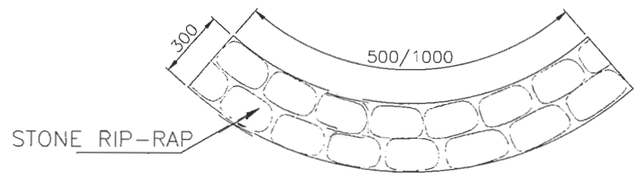


NOTE#
1. THE DETAILS OF RIP-RAP CHANNEL IS GIVEN AT BIOICAL DRAWINGS OF RIP-RAP CHANNELS.

| EMPLOYER | PROJECT | DESIGN CONSULTANT | | | | | | |
|---|---|---|---|---|---|---|---|---|
| Government of Nepal<br>Ministry of Physical Infrastructure and Transport<br>**Department of Roads**<br>**Development Cooperation Implementation Division** | Nepal India Regional Trade and Transport Project (NIRTTP)<br>(IDA CREDIT No. 5273 - NEP)<br>Detailed Design for Improvement of Kathmandu (Nagdhunga) - Naubise - Mugling Road and Bridges | Intercontinental Consultants & Technocrats Pvt. Ltd.<br>A-8, Green Park, New Delhi - 110016<br>Ph : 4086-3000, Fax 2685-5252<br>In Joint Venture With<br>Soosung Engineering Co. Ltd., South Korea<br>FBC<br>In Association With<br>Full Bright Consultancy (Pvt.) Ltd.<br>316,Baburam Acharya Sadak<br>Sinamangal, Kathmandu, GPO Box: 4970, Kathmandu, Nepal | Designed By | SB | | **DRAWING NAME:**<br>TYPICAL BIO - ENGINEERING | **Scale:**<br>NOT TO SCALE | **Date:**<br>August 2019 |
| | | | Checked By | PMS | | | | **Drawing No.:**<br>NNMR-TYP 07-07 |
| | | | Approved By | BNS | | | | |

(A) EXCAVATION OF TRENCH

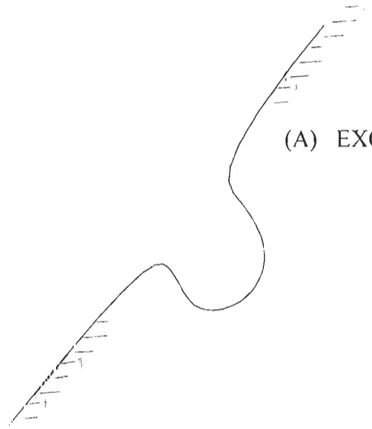

(B) PLACING GABION PANEL IN POSITION AND BOULDER FILLING

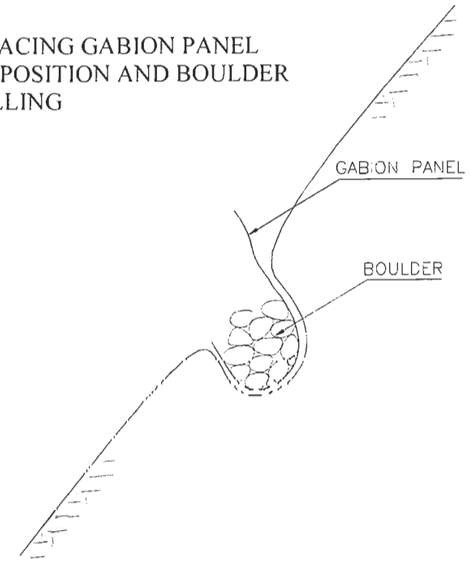


(C) TURNING THE END OF PANEL FOR CLOSING

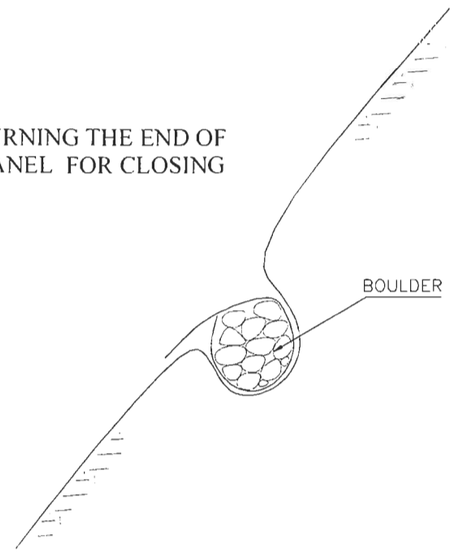


(D) FIXING REBARS AND BACKFILLING

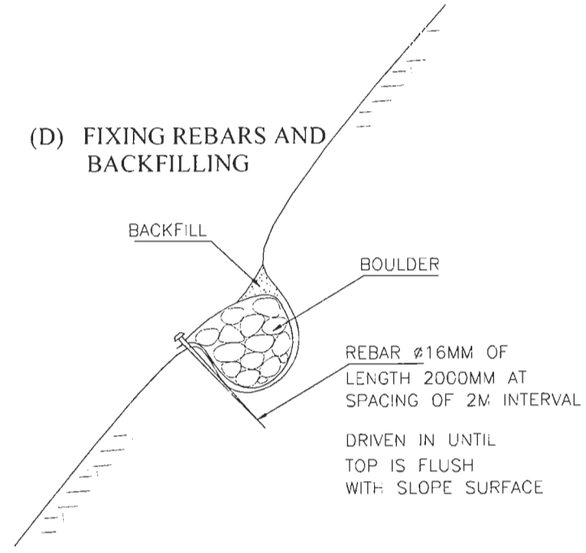


## SPACING OF BOLSTER

| SLOPE ANGLE | SPACING (CENTRES) |
|---|---|
| <30° | 2000 MM |
| <30°-45° | 1500 MM |

| EMPLOYER | PROJECT | DESIGN CONSULTANT | | | | | |
|---|---|---|---|---|---|---|---|
| Government of Nepal<br>Ministry of Physical Infrastructure and Transport<br>**Department of Roads**<br>**Development Cooperation Implementation Division** | Nepal India Regional Trade and Transport Project (NIRTTP)<br>(IDA CREDIT No. 5273 - NEP)<br>Detailed Design for Improvement of Kathmandu (Nagdhunga) - Naubise - Mugling Road and Bridges | Intercontinental Consultants & Technocrats Pvt. Ltd.<br>A-8, Green Park, New Delhi - 110016<br>Ph : 4086-3000, Fax 2685-5252<br>In Joint Venture With<br>Soosung Engineering Co. Ltd., South Korea | In Association With<br>Full Bright Consultancy (Pvt.) Ltd.<br>316,Baburam Acharya Sadak<br>Sinamangal, Kathmandu, GPO<br>Box: 4970, Kathmandu, Nepal | Designed By | SB | | **DRAWING NAME:** TYPICAL BIO - ENGINEERING |
| | | | | Checked By | PMS | | |
| | | | | Approved By | BNS | | |

| Scale: | Date: |
|---|---|
| NOT TO SCALE | August 2019 |
| | **Drawing No.:** NNMR-TYP 07-08 |

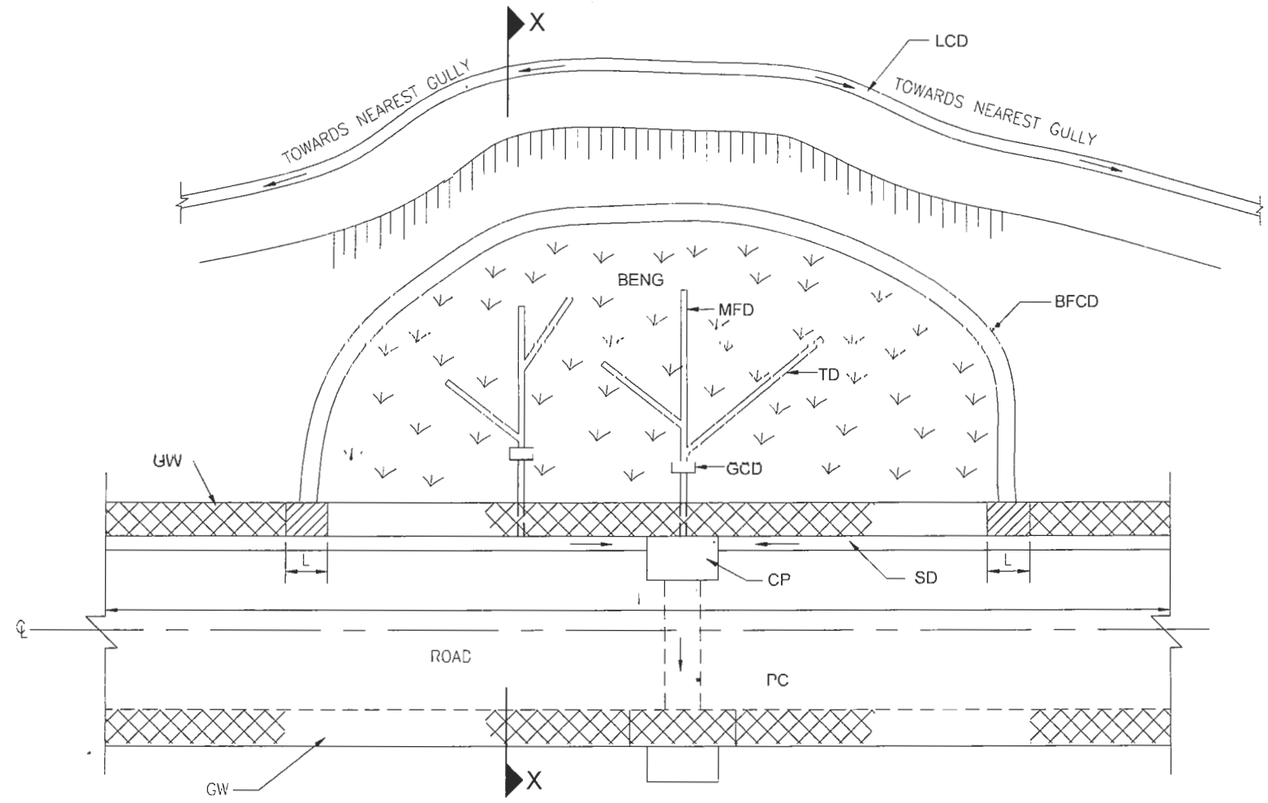


PLAN

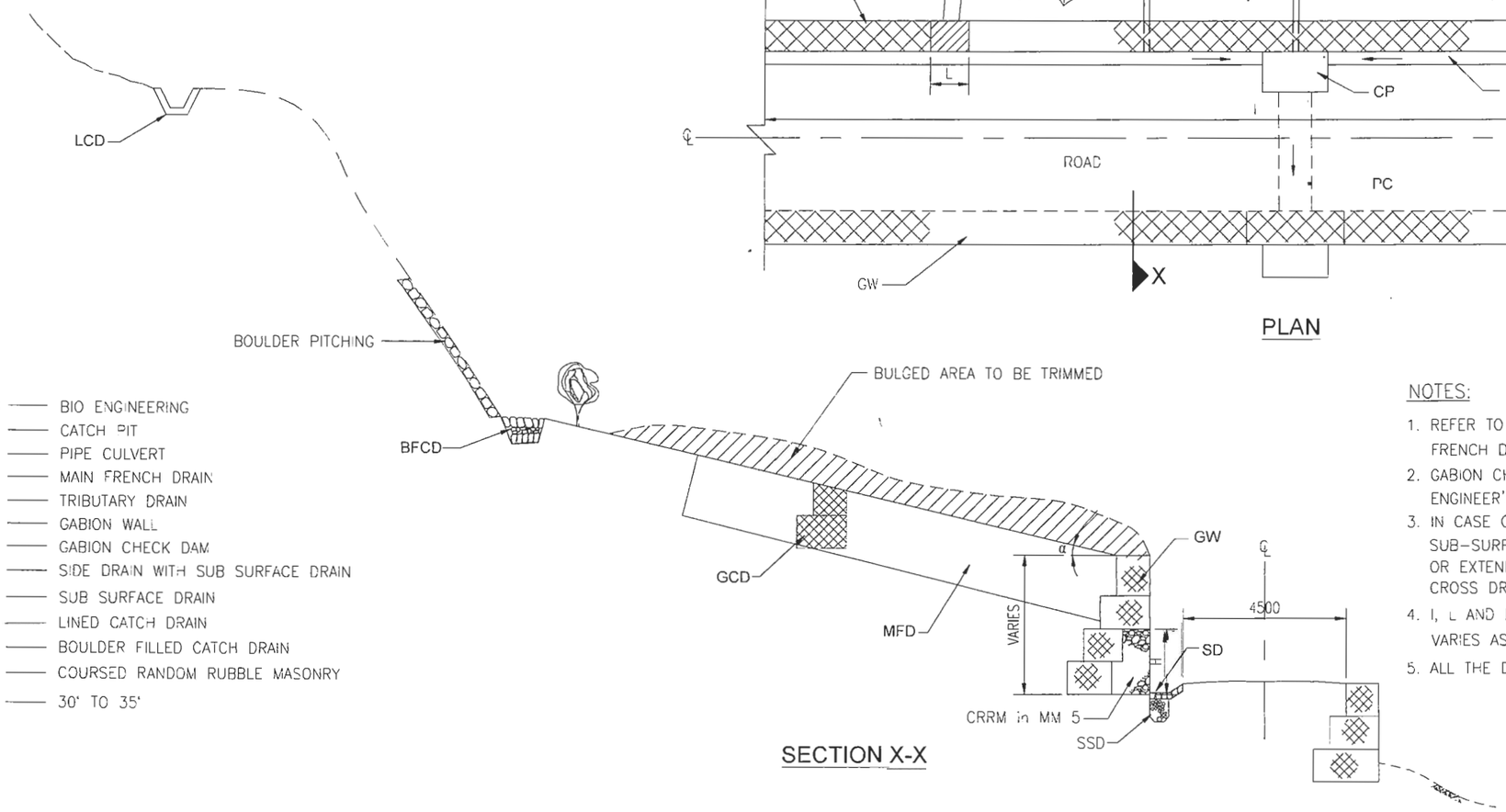


SECTION X-X

BENG —— BIO ENGINEERING
CP —— CATCH PIT
PC —— PIPE CULVERT
MFD —— MAIN FRENCH DRAIN
TD —— TRIBUTARY DRAIN
GW —— GABION WALL
GCD —— GABION CHECK DAM
SD —— SIDE DRAIN WITH SUB SURFACE DRAIN
SSD —— SUB SURFACE DRAIN
LCD —— LINED CATCH DRAIN
BFCD —— BOULDER FILLED CATCH DRAIN
CRRM —— COURSED RANDOM RUBBLE MASONRY
α —— 30° TO 35°

NOTES:

1. REFER TO STANDARD DRAWING RSDP FOR FRENCH DRAIN DETAILS DWG NO.- NM-TYP & SHEET NO. 21/32
2. GABION CHECK DAM IF REQUIRED SHALL BE PROVIDED AS PER ENGINEER'S DIRECTION.
3. IN CASE CROSS DRAINAGE CAN NOT BE PROVIDED, PROVIDE SUB-SURFACE DRAINAGE ACROSS THE ROAD @ EVERY 10 m C/C, OR EXTEND SUB-SOIL DRAINAGE BELOW GL TO THE NEAREST CROSS DRAINAGE.
4. I, L AND H OF CRRM WALL PROVIDED IN THE OUTLET OF SUB SURFACE DRAIN VARIES AS PER SITE CONDITION (L=2 TO 3 m).
5. ALL THE DIMENSIONS ARE IN MILLIMETRES UNLESS OTHERWISE MENTIONED.

| EMPLOYER | PROJECT | DESIGN CONSULTANT | | | | | | |
|---|---|---|---|---|---|---|---|---|
| Government of Nepal<br>Ministry of Physical Infrastructure and Transport<br>**Department of Roads**<br>**Development Cooperation Implementation Division** | Nepal India Regional Trade and Transport Project (NIRTTP)<br>(IDA CREDIT No. 5273 - NEP)<br>Detailed Design for Improvement of Kathmandu (Nagdhunga) - Naubise - Mugling Road and Bridges | Intercontinental Consultants & Technocrats Pvt. Ltd.<br>A-8, Green Park, New Delhi - 110016<br>Ph : 4086-3000, Fax 2685-5252<br>In Joint Venture With<br>Soosung Engineering Co. Ltd., South Korea | In Association With<br>Full Bright Consultancy (Pvt.) Ltd.<br>316,Baburam Acharya Sadak<br>Sinamangal, Kathmandu, GPO Box: 4970, Kathmandu, Nepal | Designed By | SB | | **DRAWING NAME:**<br>LANDSLIDE STABILIZATION | **Scale:**<br>NOT TO SCALE |
| | | | | Checked By | PMS | | | **Date:**<br>August 2019 |
| | | | | Approved By | BNS | | | **Drawing No.:**<br>NNMR-TYP 07-09 |

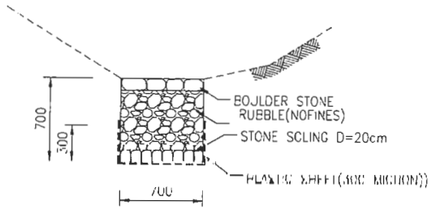


FRENCH DRAIN IN SLOPE

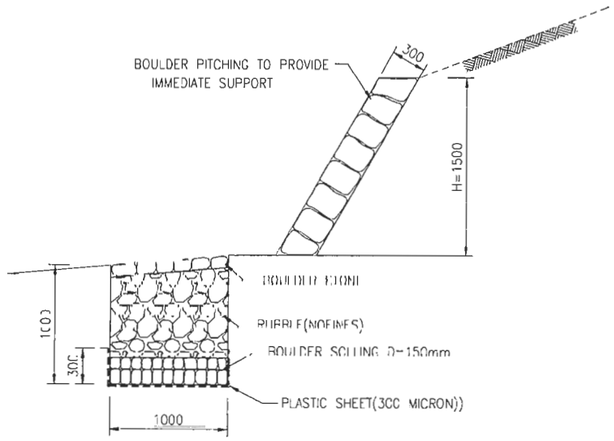


BOULDER FILLED CATCH DRAIN

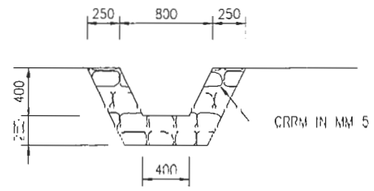


LINED CATCH DRAIN

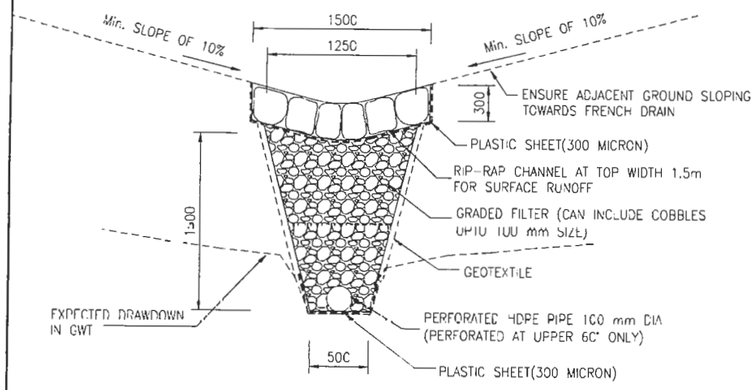


TRIBUTARY FRENCH DRAIN

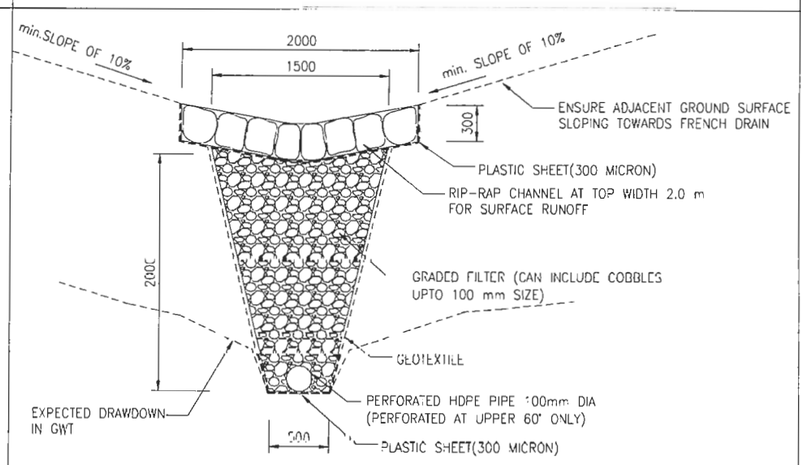


MAIN FRENCH DRAIN

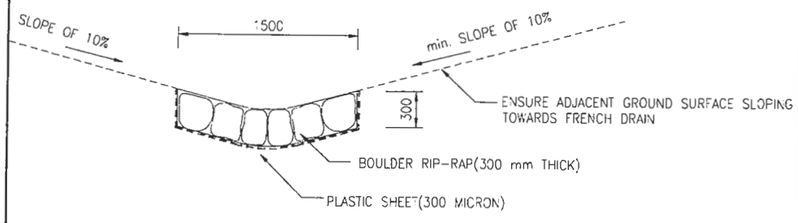


RIP-RAP CHANNEL WIDTH 1.5m

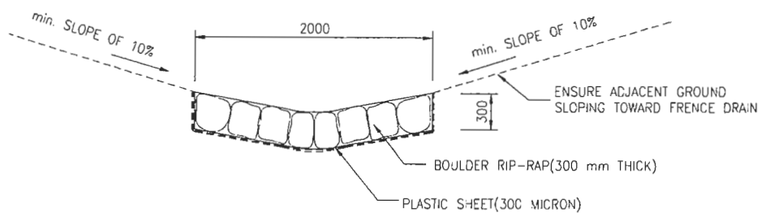


RIP-RAP CHANNEL WIDTH 2.0m

NOTE :
1. ALL DIMENSIONS ARE IN MILLIMETRES UNLESS OTHERWISE MENTIONED.

| EMPLOYER | PROJECT | DESIGN CONSULTANT | | | | | |
|---|---|---|---|---|---|---|---|
| Government of Nepal<br>Ministry of Physical Infrastructure and Transport<br>**Department of Roads**<br>**Development Cooperation Implementation Division** | Nepal India Regional Trade and Transport Project (NIRTTP)<br>(IDA CREDIT No. 5273 - NEP)<br>Detailed Design for Improvement of Kathmandu (Nagdhunga) - Naubise - Mugling Road and Bridges | Intercontinental Consultants & Technocrats Pvt. Ltd.<br>A-8, Green Park, New Delhi - 110016<br>Ph : 4086-3000, Fax 2685-5252<br>In Joint Venture With<br>Soosung Engineering Co. Ltd., South Korea | In Association With<br>Full Bright Consultancy (Pvt.) Ltd.<br>316,Baburam Acharya Sadak<br>Sinamangal, Kathmandu, GPO<br>Box: 4970, Kathmandu, Nepal | Designed By | SB | **DRAWING NAME:**<br>CATCH DRAIN AND RIP RAP CHANNELS | **Scale:**<br>NOT TO SCALE |
| | | | | Checked By | PMS | | **Date:**<br>August 2019 |
| | | | | Approved By | BNS | | **Drawing No.:**<br>NNMR-TYP 07-10 |

***NOTE:***

***All the tipping site shall be managed as per the 'Guide to Road Slope and Protection Works'.***

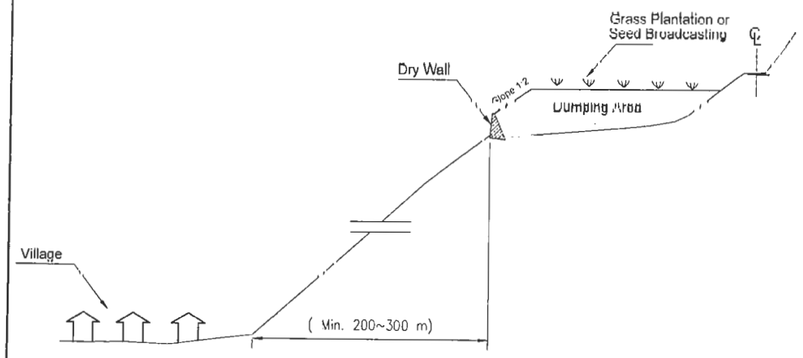


*Cross Section of Type -I*

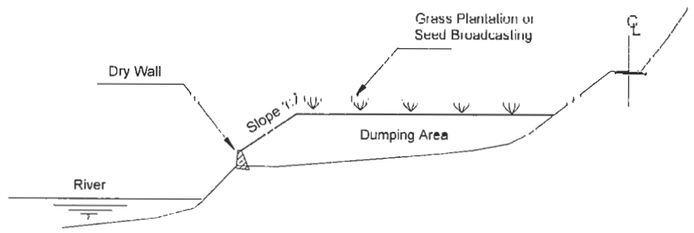


*Cross Section of Type -II*

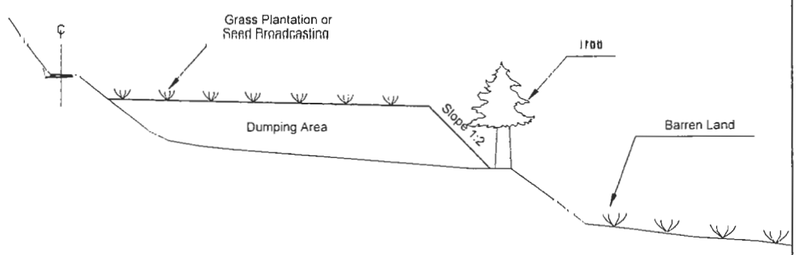


*Cross Section of Type -III*

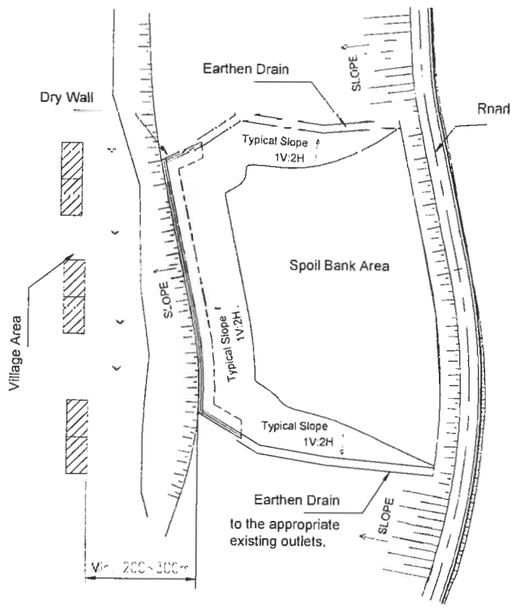


*Plan of Type -I*

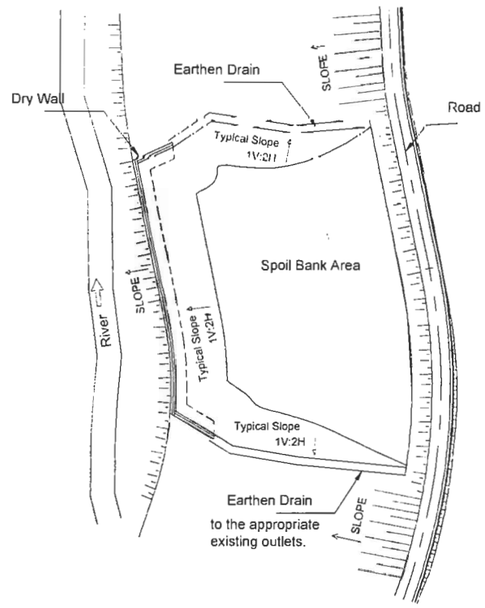


*Plan of Type -II*

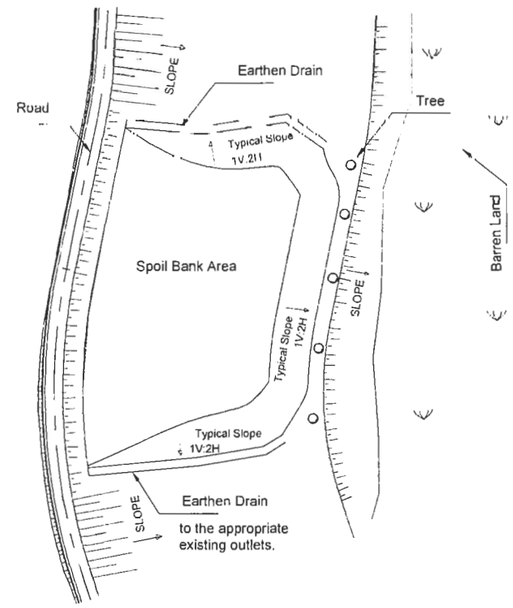


*Plan of Type -III*

| EMPLOYER | PROJECT | DESIGN CONSULTANT | | | | DRAWING NAME: | Scale: | Date: |
|---|---|---|---|---|---|---|---|---|
| Government of Nepal<br>Ministry of Physical Infrastructure and Transport<br>**Department of Roads**<br>**Development Cooperation Implementation Division** | Nepal India Regional Trade and Transport Project (NIRTTP)<br>(IDA CREDIT No. 5273 - NEP)<br>Detailed Design for Improvement of Kathmandu (Nagdhunga) - Naubise - Mugling Road and Bridges | Intercontinental Consultants & Technocrats Pvt. Ltd.<br>A-8, Green Park, New Delhi - 110016<br>Ph : 4086-3000, Fax 2685-5252<br>In Joint Venture With<br>Soosung Engineering Co. Ltd., South Korea | In Association With<br>Full Bright Consultancy (Pvt.) Ltd.<br>316,Baburam Acharya Sadak<br>Sinamangal, Kathmandu, GPO<br>Box: 4970, Kathmandu, Nepal | Designed By | SB | | PROTECTION OF DUMPING SITE | NOT TO SCALE | August 2019 |
| | | | | Checked By | PMS | | | | **Drawing No.:** |
| | | | | Approved By | BNS | | | | NNMR-TYP 07-11 |

# FOOT OVER BRIDGES

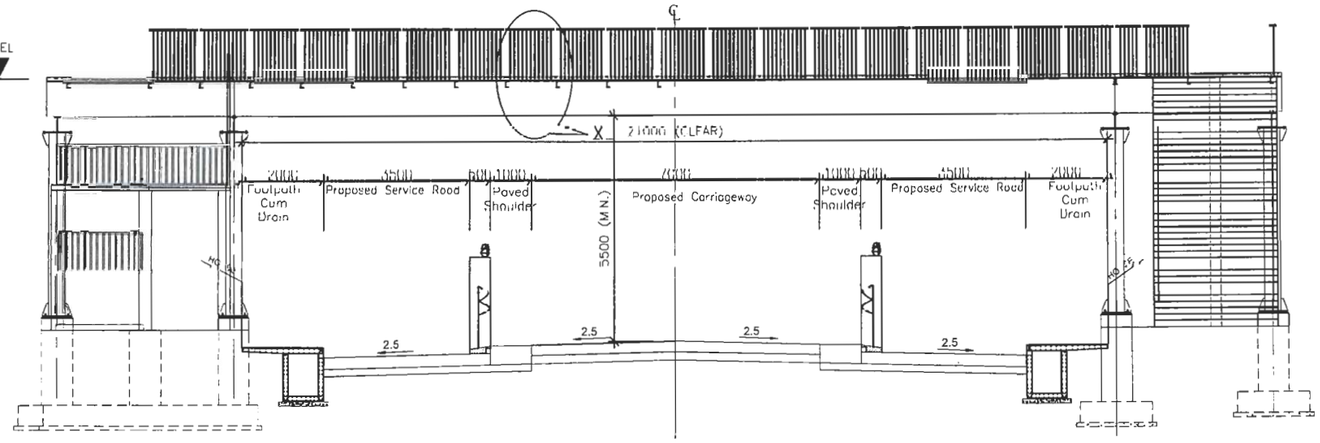


VIEW A-A
(SCALE 1:100)

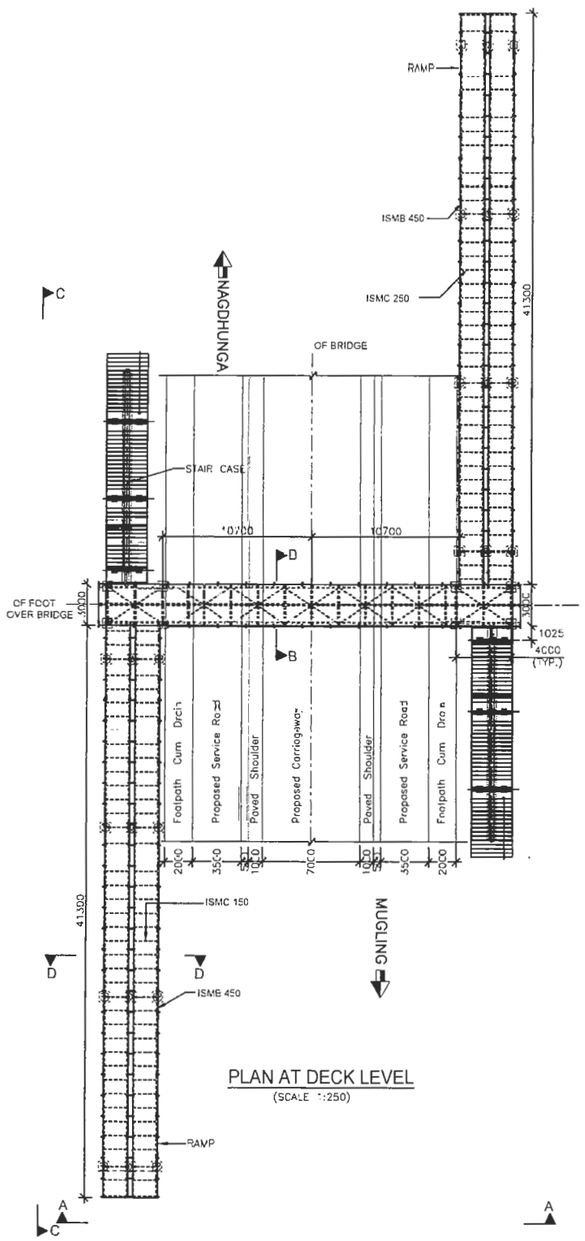


PLAN AT DECK LEVEL
(SCALE 1:250)

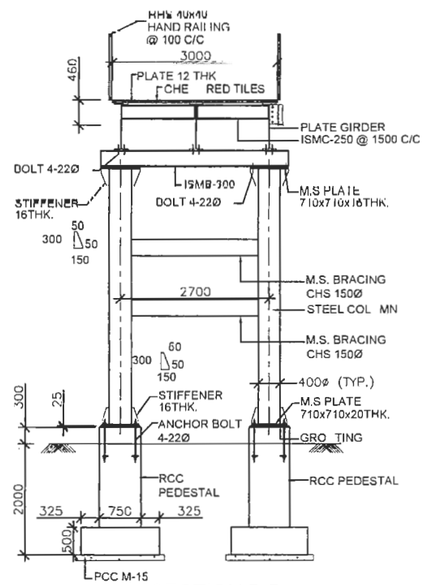


SECTION B-B
(SCALE 1:75)

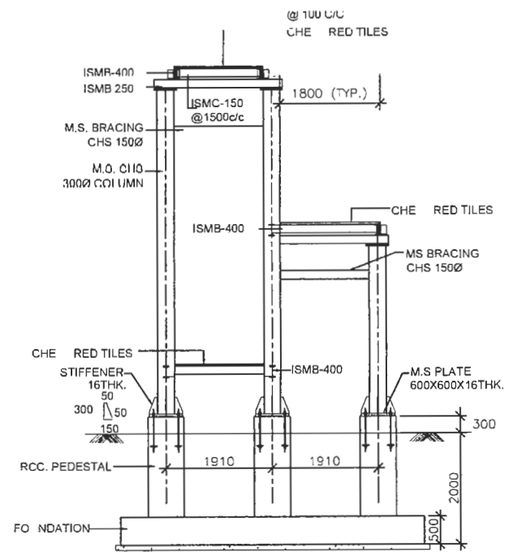


SECTION D-D
(HAND RAILING NOT SHOWN FOR CLARITY )
(SCALE 1:75)

NOTES:-

1. ALL DIMENSIONS ARE IN MM AND LEVELS ARE IN METERS.
2. ONLY WRITTEN DIMENSIONS TO BE FOLLOWED.
3. ALL STRUCTURAL STEEL SHALL CONFORM TO IS:2062-2006 GRADE Fe 410.
4. ALL WELDING SHALL CONFORM TO IS:816-1969 AND IS:1323-1982.
5. ERECTION BOLTS AND NUTS SHALL CONFORM TO IS:1363-1967 AND IS:1367-(PART-3) 2002.
6. FABRICATION AND ERECTION OF STRUCTURAL STEEL WORKS SHALL CONFORM TO IRC:24-2001C (SECTION-V), IS:7205-1974 AND IS:7215-1974.
7. ALL HOLES FOR HSFG BOLTS AND ERECTION BOLTS SHALL BE DRILLED.
8. ALL HOLES NECESSARY FOR ERECTION BOLTS SHALL BE PLUGGED FULLY AFTER SUCCESSFUL COMPLETION OF ERECTION WORK.
9. ALL WELDS SHALL BE 6mm CONT. FILLET UNLESS NOTED OTHERWISE.
10. CUTTING LENGTH OF GUSSET PLATES TO BE FINALIZED BY FULL SCALE SHOP LAYOUT.
11. FABRICATION DRAWING SHOULD BE PREPARED BY THE CONTRACTOR AND APPROVED BY THE ENGINEER BEFORE CONSTRUCTION.
12. ALL DIMENSIONS TO BE CONFIRMED AT SITE BEFORE CUTTING OF MEMBERS.
13. ALL FOUNDATION DETAILS MAY BE FINALIZED ONLY AFTER HAVING GEOTECHNICAL INVESTIGATIONS REPORT. THIS MAY ALSO AFFECT THE FINAL DETAILS/LEVELS OF COLUMN BASE PLATES.
14. LOCATIONS AND DETAILS OF FILED SPLICES FOR ERECTION OF THE STRUCTURAL SYSTEM SHALL BE PROPOSED BY THE STEEL FABRICATOR.
15. THE FOB WILL BE DESIGNED FOR FOOTWAY LIVE LOAD AS PER CLAUSE 206 OF IRC: 6-2017.
16. STEEL RAILINGS SHALL BE OF HOLLOW TUBULAR SECTIONS AS APPROVED BY ENGINEER-INCHARGE.
17. SAFE BEARING CAPACITY UNDER FOOTING OF PIER AND COLUMNS, UNDER STAIRCASE IS 20t/sqm. THIS MAY BE ENSURED AT SITE BEFORE EXECUTION OF WORK ANY DEVIATION IN SBC IN SOIL REPORT FROM CONSIDERED SBC IS DESIGN SHALL BE REPORT TO ENGINEER FOR CHANGES IN DESIGN.
18. WHILE EXCAVATING FOR FOOTING PRECAUTIONS WILL BE TAKEN TO PROTECT THE EXISTING DUCTS AND OTHER SERVICES ENCOUNTERED IN THE AREA OF EXCAVATION.

NOTES ON PROTECTIVE SURFACE COATING

1. SURFACE PREPARATION GRIT BLASTING TO GRADE SP 2.5 AS PER IS.9954.
2. ONE COAT OF FOLLOWED BY ONE COAT OF ZINC CHROMATE OXIDE PRIMER TO IS:2074
3. TWO FINISHING COATS OF ALUMINIUM PAINT TO IS:2339 OVER PRIMER COATS ONE COAT SHALL BE APPLIED BEFORE THE FABRICATED STEEL WORK LEAVES THE SHOP.

**THE FOUNDATION SIZE SHALL BE REVIEWED BASED ON GEOTECHNICAL INVESTIGATION CARRIED OUT AT SITE**

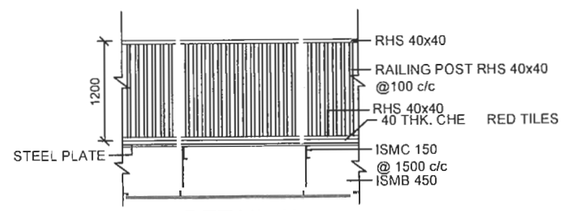


DETAIL X
(SCALE 1:50)

| EMPLOYER | PROJECT | DESIGN CONSULTANT | | | | | |
|---|---|---|---|---|---|---|---|
| Government of Nepal<br>Ministry of Physical Infrastructure and Transport<br>**Department of Roads**<br>**Development Cooperation Implementation Division** | Nepal India Regional Trade and Transport Project (NIRTTP)<br>(IDA CREDIT No. 5273 - NEP)<br>Detailed Design for Improvement of Kathmandu (Nagdhunga) - Naubise - Mugling Road and Bridges | Intercontinental Consultants & Technocrats Pvt. Ltd.<br>A-8, Green Park, New Delhi - 110016<br>Ph : 4086-3000, Fax 2685-5252<br>In Joint Venture With<br>Soosung Engineering Co. Ltd., South Korea | In Association With<br>Full Bright Consultancy (Pvt.) Ltd.<br>316,Baburam Acharya Sadak<br>Sinamangal, Kathmandu, GPO<br>Box: 4970, Kathmandu, Nepal | Designed By | SB | **DRAWING NAME:**<br>TYPICAL GENERAL ARRANGEMENT OF FOOT OVER BRIDGE FOR 21M CARRIAGEWAY | **Scale:** |
| | | | | Checked By | PMS | | **Date:**<br>August 2019 |
| | | | | Approved By | BNS | | **Drawing No.:**<br>NNMR-TYP 08-01 |

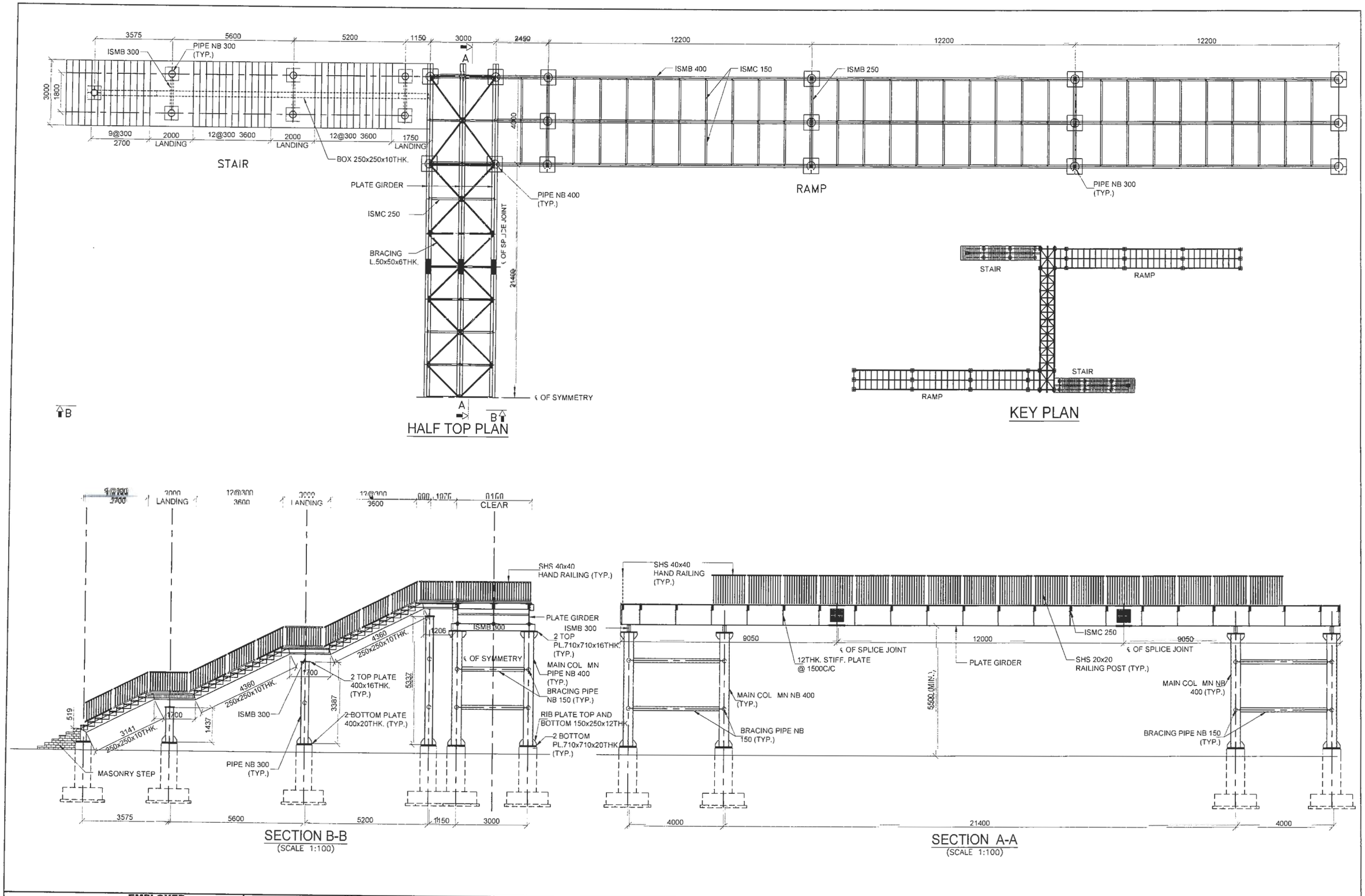


| EMPLOYER | PROJECT | DESIGN CONSULTANT | | | | | |
|---|---|---|---|---|---|---|---|
| Government of Nepal<br>Ministry of Physical Infrastructure and Transport<br>**Department of Roads**<br>**Development Cooperation Implementation Division** | Nepal India Regional Trade and Transport Project (NIRTTP)<br>(IDA CREDIT No. 5273 - NEP)<br>Detailed Design for Improvement of Kathmandu (Nagdhunga) - Naubise - Mugling Road and Bridges | Intercontinental Consultants & Technocrats Pvt. Ltd.<br>A-8, Green Park, New Delhi - 110016<br>Ph : 4086-3000, Fax 2685-5252<br>In Joint Venture With<br>Soosung Engineering Co. Ltd., South Korea | In Association With<br>Full Bright Consultancy (Pvt.) Ltd.<br>316,Baburam Acharya Sadak<br>Sinamangal, Kathmandu, GPO Box: 4970, Kathmandu, Nepal | Designed By | SB | **DRAWING NAME:**<br>TYPICAL GENERAL ARRANGEMENT MARKING PLAN OF FOOT OVER BRIDGE FOR 21M CARRIAGEWAY | **Scale:**<br>AS SHOWN |
| | | | | Checked By | PMS | | **Date:**<br>August 2019 |
| | | | | Approved By | BNS | | **Drawing No.:**<br>NNMR-TYP 08-02 |

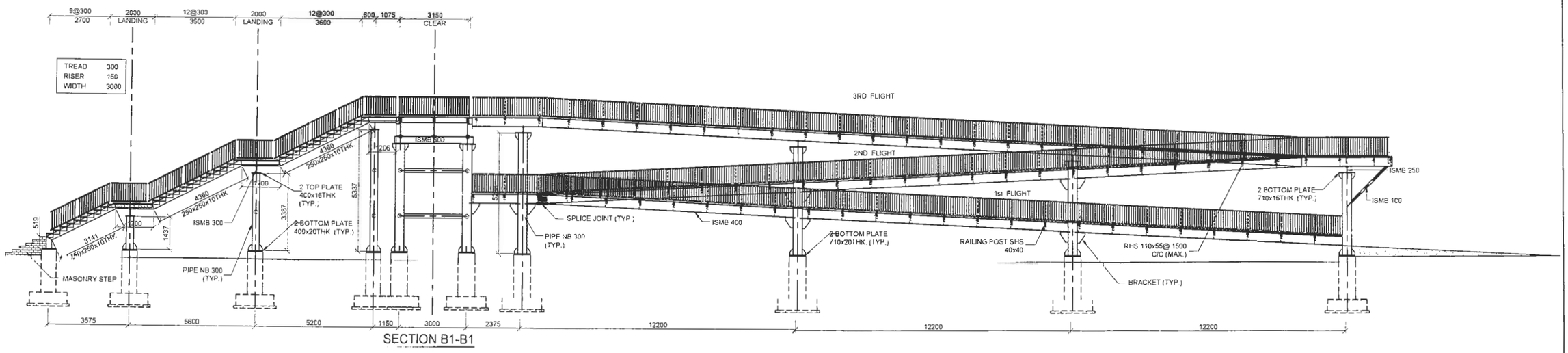


SECTION B1-B1

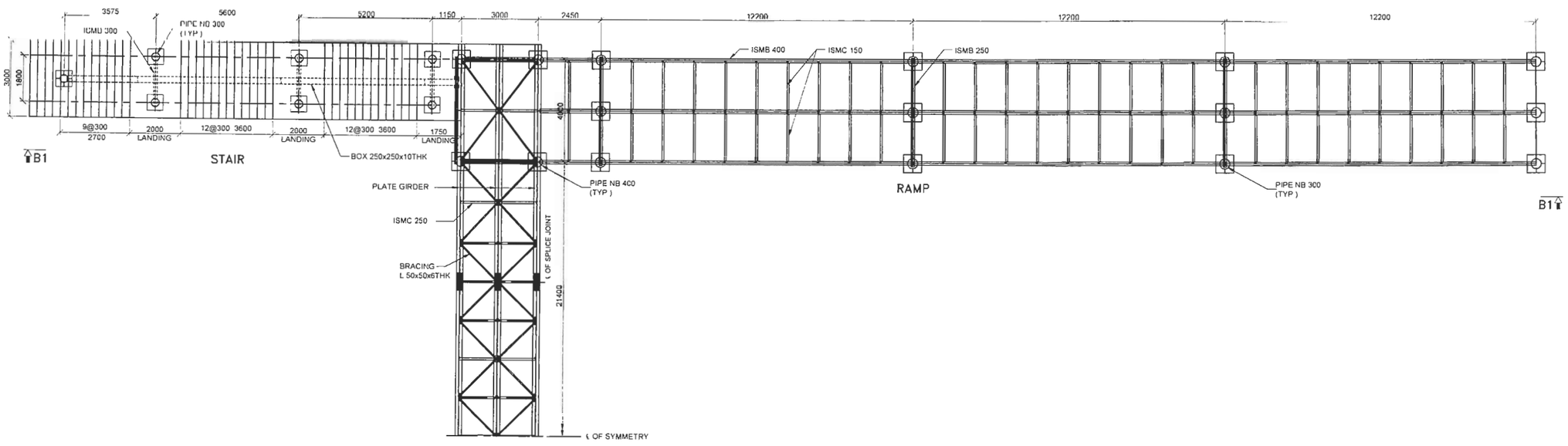


HALF TOP PLAN

| EMPLOYER | PROJECT | DESIGN CONSULTANT | | | | | | |
|---|---|---|---|---|---|---|---|---|
| Government of Nepal<br>Ministry of Physical Infrastructure and Transport<br>**Department of Roads**<br>**Development Cooperation Implementation Division** | Nepal India Regional Trade and Transport Project (NIRTTP)<br>(IDA CREDIT No. 5273 - NEP)<br>Detailed Design for Improvement of Kathmandu (Nagdhunga) - Naubise - Mugling Road and Bridges | Intercontinental Consultants & Technocrats Pvt. Ltd.<br>A-8, Green Park, New Delhi - 110016<br>Ph : 4086-3000, Fax 2685-5252<br>In Joint Venture With<br>Soosung Engineering Co. Ltd., South Korea | In Association With<br>Full Bright Consultancy (Pvt.) Ltd.<br>316,Baburam Acharya Sadak<br>Sinamangal, Kathmandu, GPO Box: 4970, Kathmandu, Nepal | Designed By | SB | | **DRAWING NAME:**<br>TYPICAL GENERAL ARRANGEMENT MARKING PLAN OF FOOT OVER BRIDGE FOR 21M CARRIAGEWAY | **Scale:**<br>AS SHOWN | **Date:**<br>August 2019 |
| | | | | Checked By | PMS | | | | **Drawing No.:**<br>NNMR-TYP 08-03 |
| | | | | Approved By | BNS | | | | |

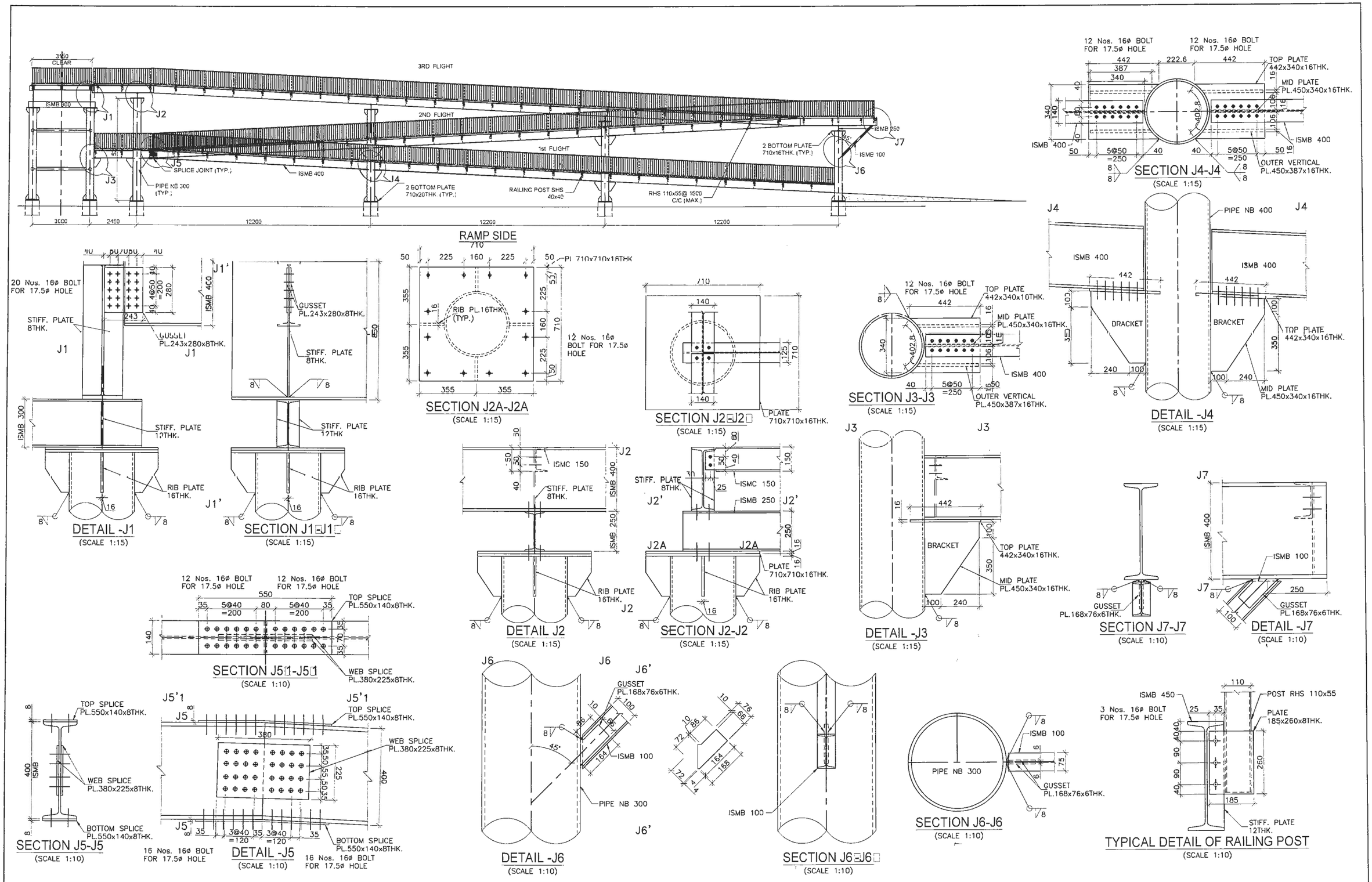


| EMPLOYER | PROJECT | DESIGN CONSULTANT | | | | | |
|---|---|---|---|---|---|---|---|
| Government of Nepal<br>Ministry of Physical Infrastructure and Transport<br>**Department of Roads**<br>**Development Cooperation Implementation Division** | Nepal India Regional Trade and Transport Project<br>(NIRTTP)<br>(IDA CREDIT No. 5273 - NEP)<br>Detailed Design for Improvement of Kathmandu (Nagdhunga) - Naubise - Mugling Road and Bridges | Intercontinental Consultants & Technocrats Pvt. Ltd.<br>A-8, Green Park, New Delhi - 110016<br>Ph : 4086-3000, Fax 2685-5252<br>In Joint Venture With<br>Soosung Engineering Co. Ltd., South Korea | In Association With<br>Full Bright Consultancy (Pvt.) Ltd.<br>316,Baburam Acharya Sadak<br>Sinamangal, Kathmandu, GPO Box: 4970, Kathmandu, Nepal | Designed By | SB | **DRAWING NAME:**<br>TYPICAL CONNECTION DETAILS OF FOOT OVER BRIDGE FOR 21M CARRIAGEWAY | **Scale:**<br>AS SHOWN |
| | | | | Checked By | PMS | | **Date:**<br>August 2019 |
| | | | | Approved By | BNS | | **Drawing No.:**<br>NNMR-TYP 08-04 |

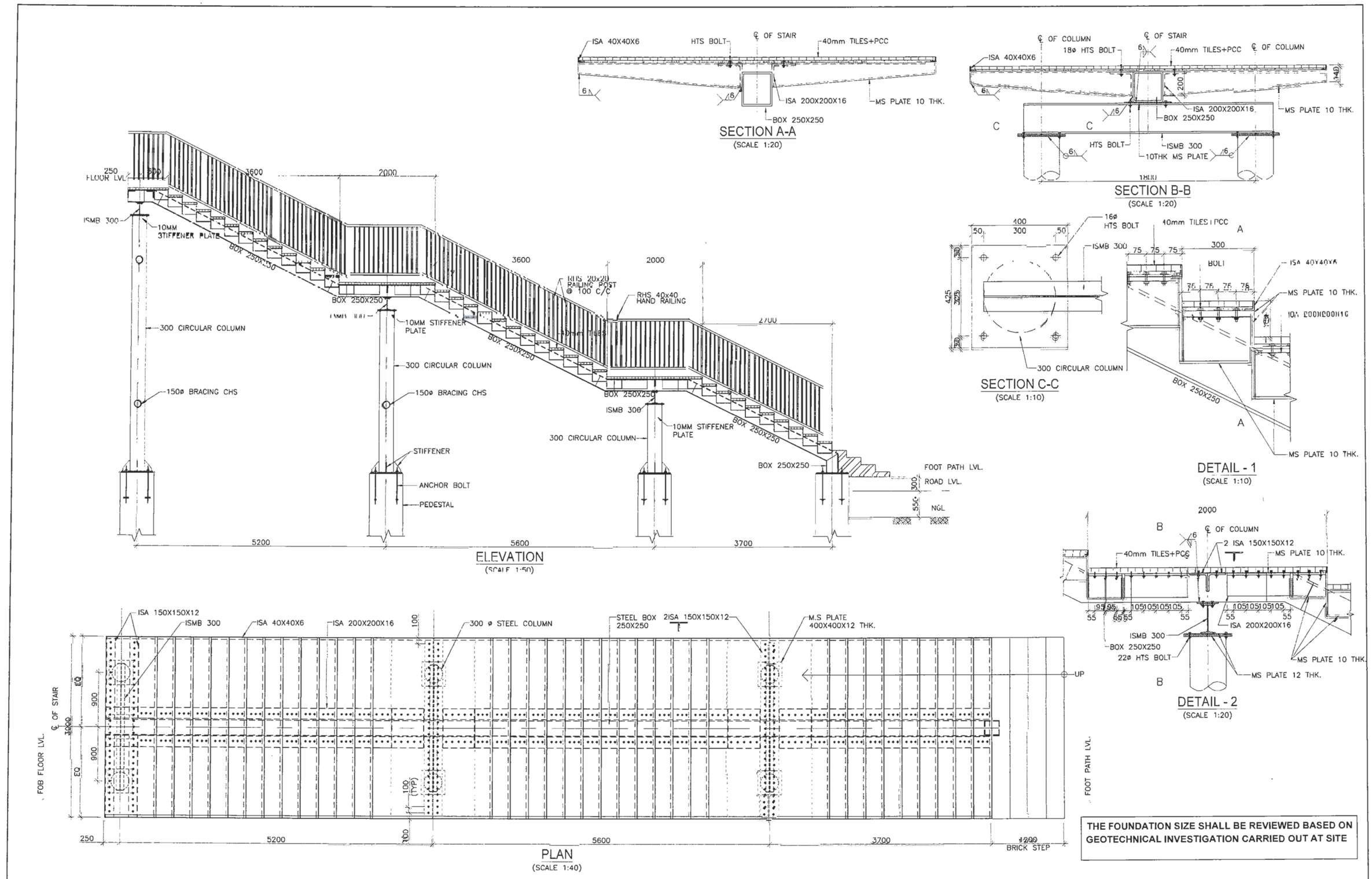


**THE FOUNDATION SIZE SHALL BE REVIEWED BASED ON GEOTECHNICAL INVESTIGATION CARRIED OUT AT SITE**

| EMPLOYER | PROJECT | DESIGN CONSULTANT | | | | | |
|---|---|---|---|---|---|---|---|
| Government of Nepal<br>Ministry of Physical Infrastructure and Transport<br>**Department of Roads**<br>**Development Cooperation Implementation Division** | Nepal India Regional Trade and Transport Project (NIRTTP)<br>(IDA CREDIT No. 5273 - NEP)<br>Detailed Design for Improvement of Kathmandu (Nagdhunga) - Naubise - Mugling Road and Bridges | Intercontinental Consultants & Technocrats Pvt. Ltd.<br>A-8, Green Park, New Delhi - 110016<br>Ph : 4086-3000, Fax 2685-5252<br>In Joint Venture With<br>Soosung Engineering Co. Ltd., South Korea | In Association With<br>Full Bright Consultancy (Pvt.) Ltd.<br>316,Baburam Acharya Sadak<br>Sinamangal, Kathmandu, GPO<br>Box: 4970, Kathmandu, Nepal | Designed By | SB | | **DRAWING NAME:**<br>TYPICAL CONNECTION DETAILS OF FOOT OVER BRIDGE FOR 21M CARRIAGEWAY | **Scale:**<br>AS SHOWN | **Date:**<br>August 2019 |
| | | | | Checked By | PMS | | | | **Drawing No.:**<br>NNMR-TYP 08-05 |
| | | | | Approved By | BNS | | | | |

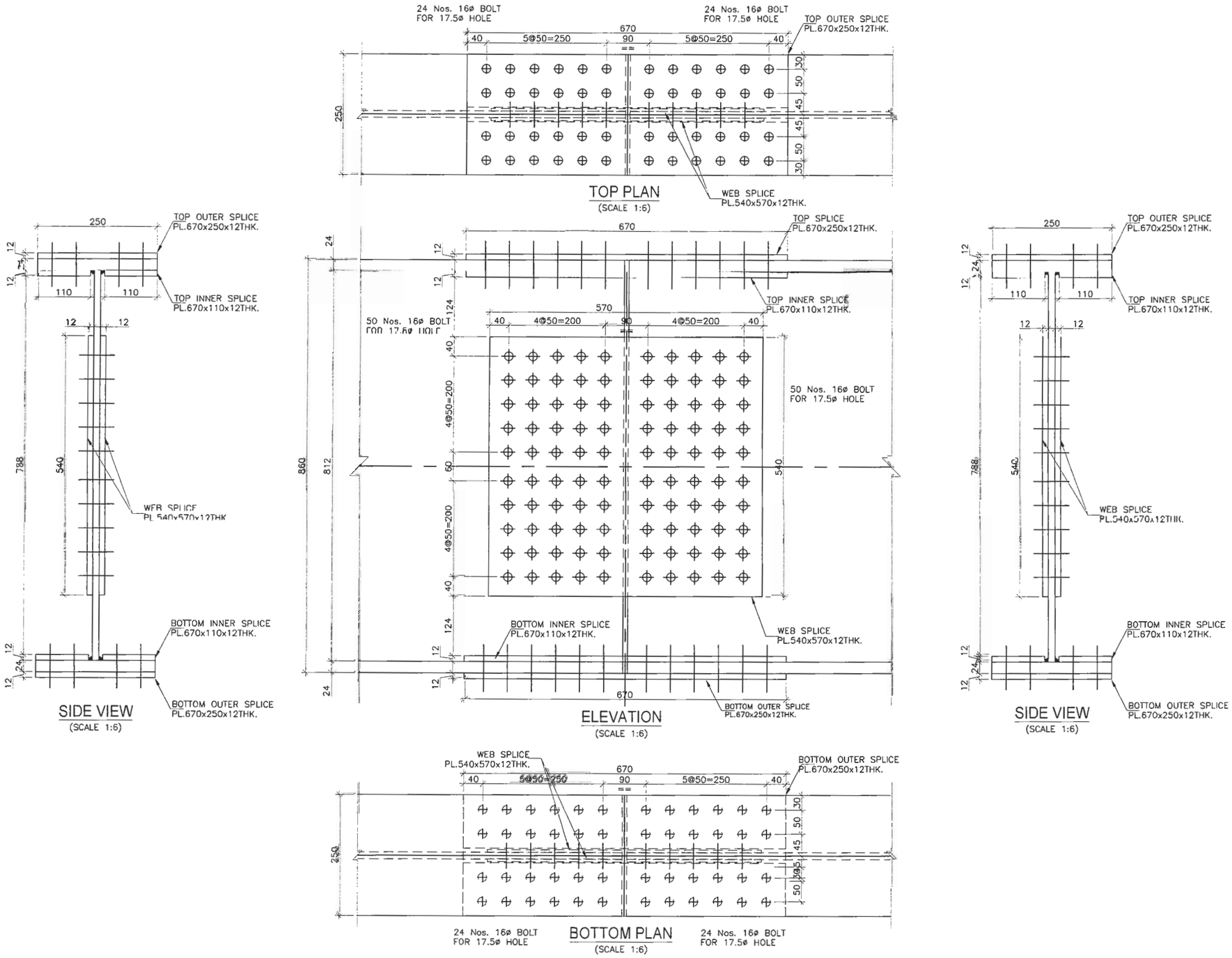


| EMPLOYER | PROJECT | DESIGN CONSULTANT | | | | | |
|---|---|---|---|---|---|---|---|
| Government of Nepal<br>Ministry of Physical Infrastructure and Transport<br>**Department of Roads**<br>**Development Cooperation Implementation Division** | Nepal India Regional Trade and Transport Project (NIRTTP)<br>(IDA CREDIT No. 5273 - NEP)<br>Detailed Design for Improvement of Kathmandu (Nagdhunga) - Naubise - Mugling Road and Bridges | Intercontinental Consultants & Technocrats Pvt. Ltd.<br>A-8, Green Park, New Delhi - 110016<br>Ph : 4086-3000, Fax 2685-5252<br>In Joint Venture With<br>Soosung Engineering Co. Ltd., South Korea<br>FBC<br>In Association With<br>Full Bright Consultancy (Pvt.) Ltd.<br>316,Baburam Acharya Sadak<br>Sinamangal, Kathmandu, GPO<br>Box: 4970, Kathmandu, Nepal | Designed By | SB | **DRAWING NAME:**<br>TYPICAL SPLICE JOINT DETAILS OF FOOT OVER BRIDGE FOR 21M CARRIAGEWAY | **Scale:**<br>AS SHOWN | **Date:**<br>August 2019 |
| | | | Checked By | PMS | | | **Drawing No.:**<br>NNMR-TYP 08-06 |
| | | | Approved By | BNS | | | |

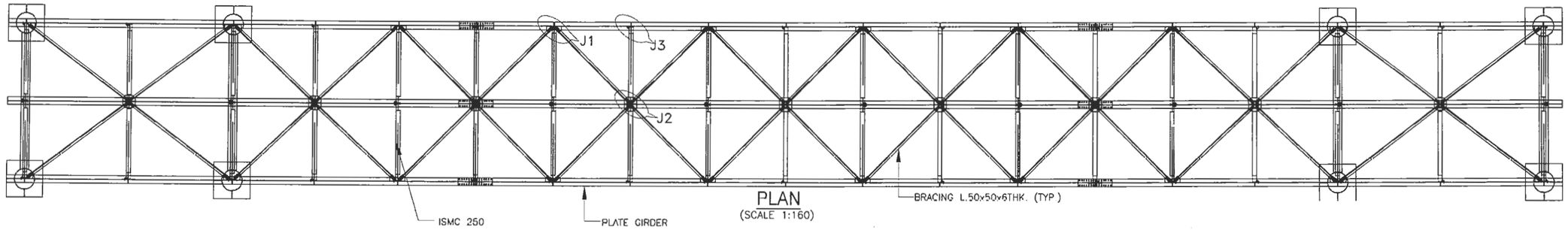


PLAN
(SCALE 1:160)

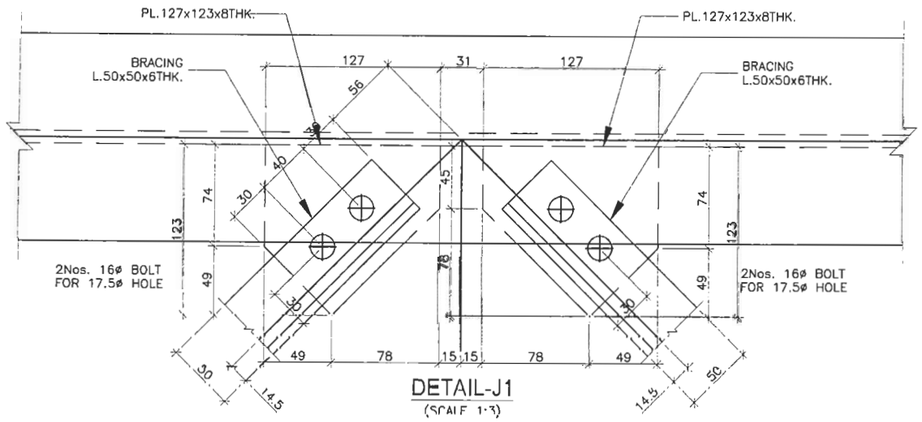


DETAIL-J1
(SCALE 1:3)

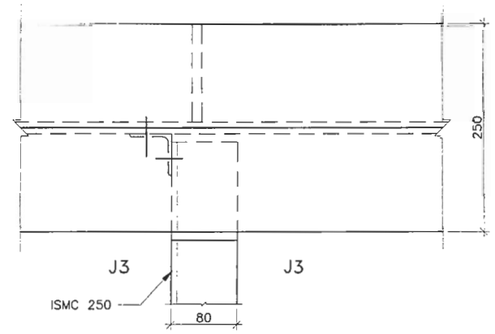


DETAIL-J3
(SCALE 1:5)

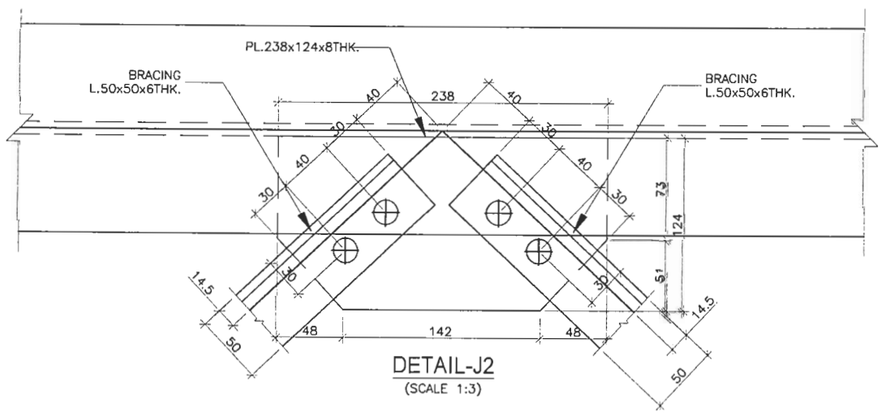


DETAIL-J2
(SCALE 1:3)

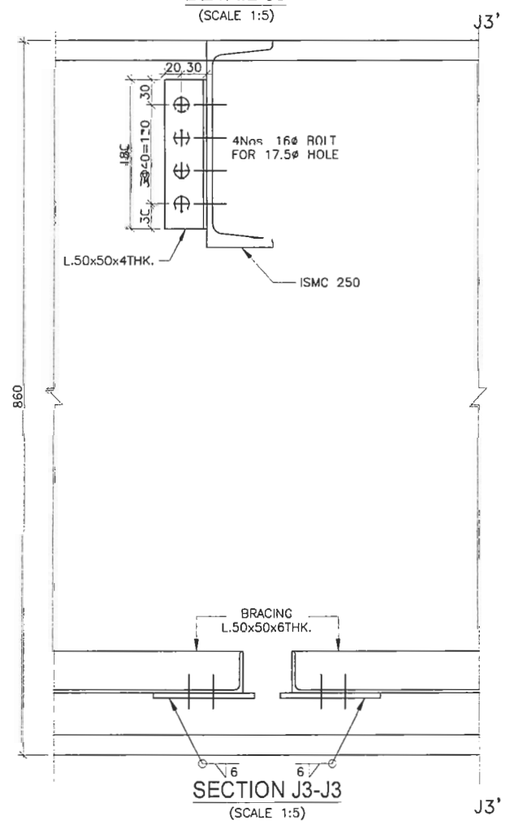


SECTION J3-J3
(SCALE 1:5)

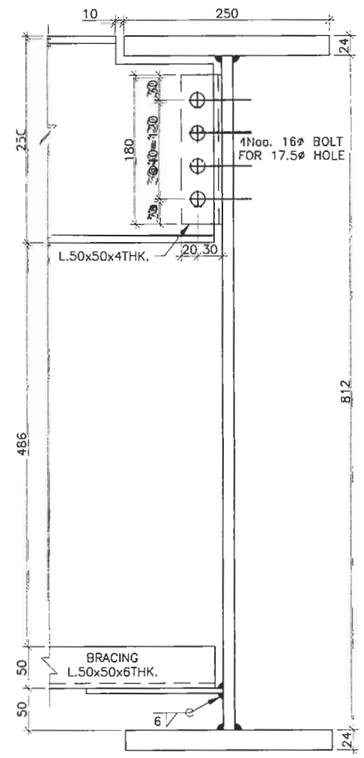


SECTION J3-J3
(SCALE 1:5)

| EMPLOYER | PROJECT | DESIGN CONSULTANT | | | | | |
|---|---|---|---|---|---|---|---|
| Government of Nepal<br>Ministry of Physical Infrastructure and Transport<br>**Department of Roads**<br>**Development Cooperation Implementation Division** | Nepal India Regional Trade and Transport Project<br>(NIRTTP)<br>(IDA CREDIT No. 5273 - NEP)<br>Detailed Design for Improvement of Kathmandu (Nagdhunga) - Naubise - Mugling Road and Bridges | Intercontinental Consultants & Technocrats Pvt. Ltd.<br>A-8, Green Park, New Delhi - 110016<br>Ph : 4086-3000, Fax 2685-5252<br>In Joint Venture With<br>Soosung Engineering Co. Ltd., South Korea | In Association With<br>Full Bright Consultancy (Pvt.) Ltd.<br>316,Baburam Acharya Sadak<br>Sinamangal, Kathmandu, GPO Box: 4970, Kathmandu, Nepal | Designed By | SB | **DRAWING NAME:**<br>TYPICAL BRACING CONNECTION DETAILS OF FOOT OVER BRIDGE FOR 21M CARRIAGEWAY | **Scale:**<br>AS SHOWN |
| | | | | Checked By | PMS | | **Date:**<br>August 2019 |
| | | | | Approved By | BNS | | **Drawing No.:**<br>NNMR-TYP 08-07 |

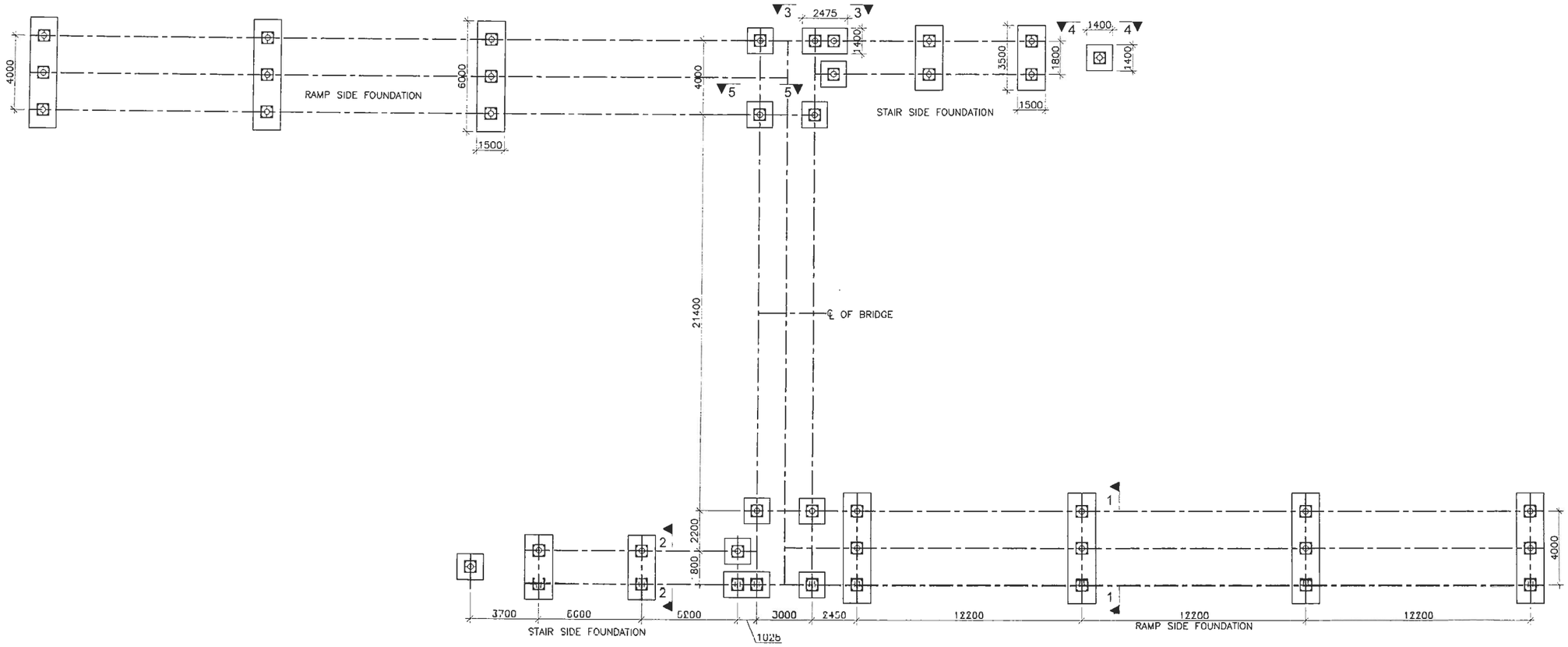


## PLAN AT FOUNDATION LEVEL

(SCALE 1:175)

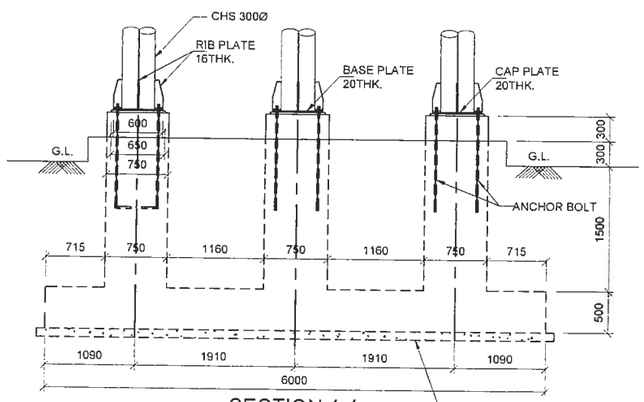


## SECTION 1-1

(SCALE 1:50)

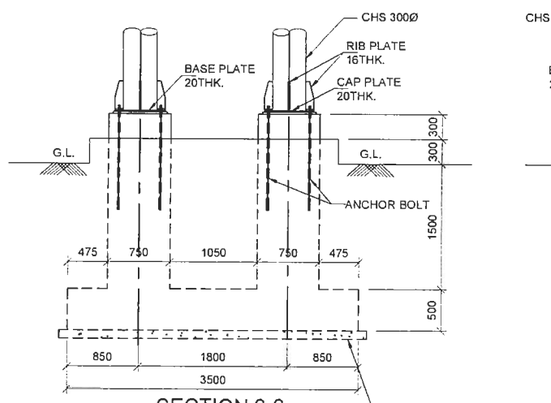


## SECTION 2-2

(SCALE 1:50)

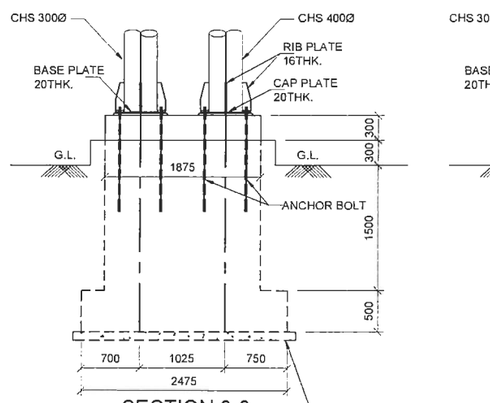


## SECTION 3-3

(SCALE 1:50)

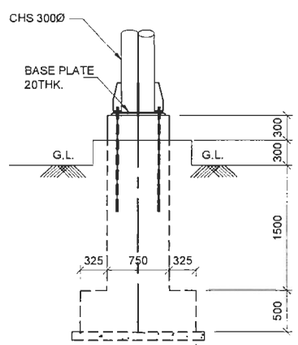


## SECTION 4-4

(SCALE 1:50)

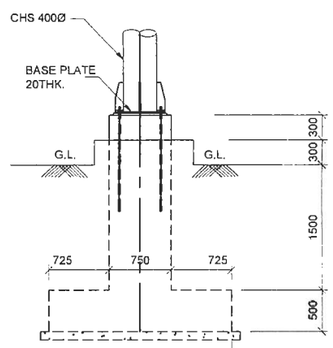


## SECTION 5-5

(SCALE 1:50)

| EMPLOYER | PROJECT | DESIGN CONSULTANT | | | | DRAWING NAME: | Scale: | Date: |
|---|---|---|---|---|---|---|---|---|
| Government of Nepal<br>Ministry of Physical Infrastructure and Transport<br>**Department of Roads**<br>**Development Cooperation Implementation Division** | Nepal India Regional Trade and Transport Project<br>(NIRTTP)<br>(IDA CREDIT No. 5273 - NEP)<br>Detailed Design for Improvement of Kathmandu (Nagdhunga) - Naubise - Mugling Road and Bridges | Intercontinental Consultants & Technocrats Pvt. Ltd.<br>A-8, Green Park, New Delhi - 110016<br>Ph : 4086-3000, Fax 2685-5252<br>In Joint Venture With<br>Soosung Engineering Co. Ltd., South Korea | In Association With<br>Full Bright Consultancy (Pvt.) Ltd.<br>316,Baburam Acharya Sadak<br>Sinamangal, Kathmandu, GPO Box: 4970, Kathmandu, Nepal | Designed By<br>Checked By<br>Approved By | SB<br>PMS<br>BNS | DIMENSION DETAILS OF FOUNDATION OF FOOT OVER BRIDGE FOR 21M CARRIAGEWAY | AS SHOWN | August 2019<br>**Drawing No.:**<br>NNMR-TYP 08-08 |

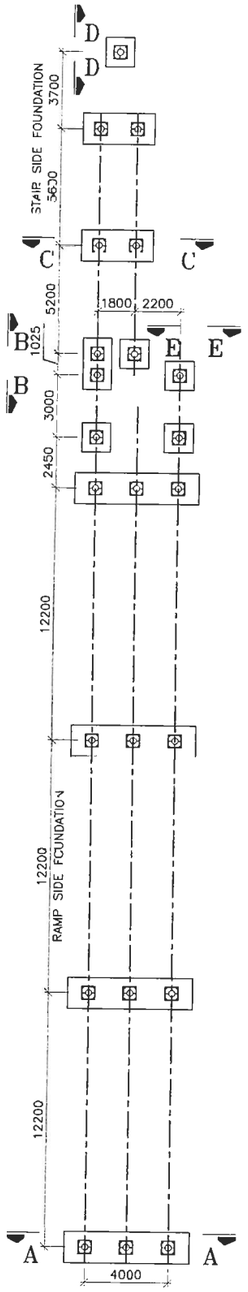


COLUMN LAYOUT PLAN

(SCALE 1:200)

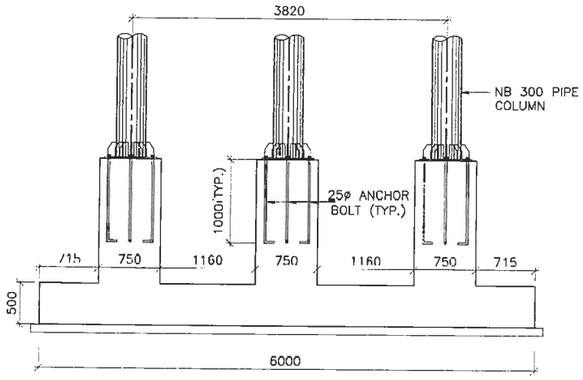


SECTION A–A

(SCALE 1:50

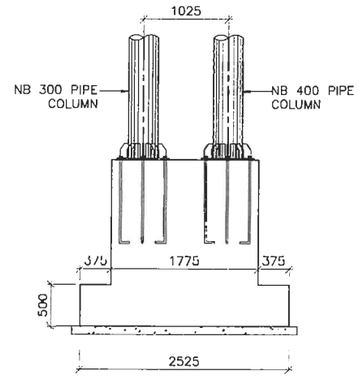


SECTION B–B

(SCALE 1:50

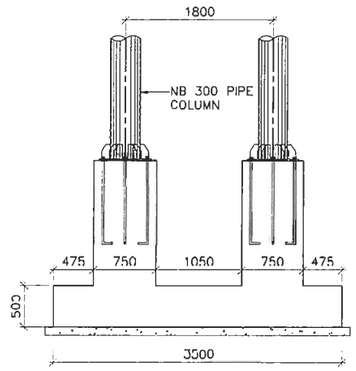


SECTION C–C

(SCALE 1:50

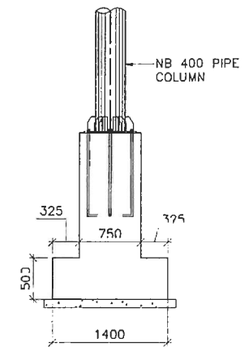


SECTION D–D

(SCALE 1:50

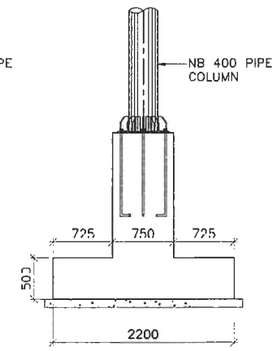


SECTION E–E

(SCALE 1:50

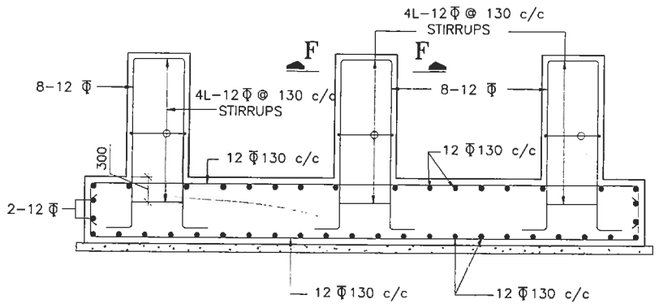


SECTION A A

(RENF. DETAIL)

(SCALE 1:50

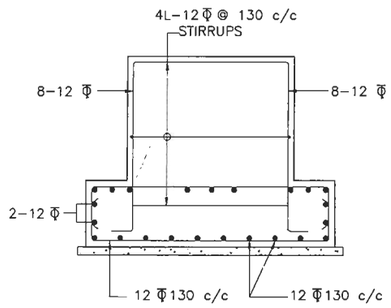


SECTION B–B

(RENF. DETAIL)

(SCALE 1:50

## NOTES

1. ALL DIMENSIONS ARE IN MILLIMETRES, UNLESS OTHERWISE MENTIONED. ONLY WRITTEN DIMENSIONS ARE TO BE FOLLOWED. NO DIMENSION IS TO BE SCALEO.
2. CONCRETE SHALL BE DESIGN MIX AND SHALL HAVE MINIMUM 28 DAYS CHARACTERISTIC STRENGTH ON 150mm CUBES AS 35 MPa.
3. ALL REINFORCING STEEL SHALL BE THERMO MECHANICALLY TREATED (TMT) BARS SATISFYING REQUIREMENTS OF HIGH YIELD STRENGTH DEFORMED BARS (GRADE DESIGNATION Fe–500D) CONFORMING TO IS:1786.
4. CLEAR COVER TO OUTER MOST STEEL IS 75mm FOR FOUNDATION.
5. LL REPRESENTS LONGITUDINAL AXIS OF THE BRIDGE AND TT REPRESENTS TRANSVERSE AXIS OF THE BRIDGE.
6. REQUIRED SAFE BEARING CAPACITY UNDER FOOTING OF PIER AND COLUMNS, UNDER STAIRCASE IS 20 t/sqm. THIS MAY BE ENSURED AT SITE.

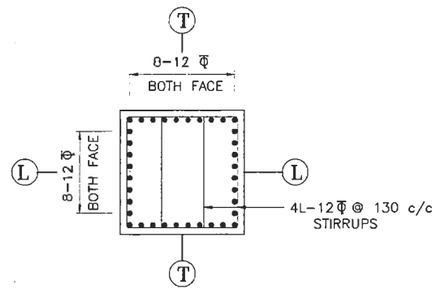


SECTION F–F

(SCALE 1:25)

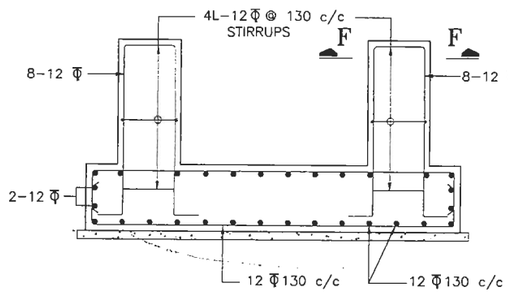


SECTION C–C

(RENF. DETAIL)

(SCALE 1:50

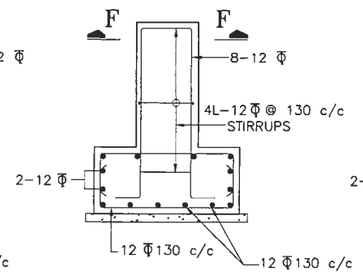


SECTION D–D

(RENF. DETAIL)

(SCALE 1:50

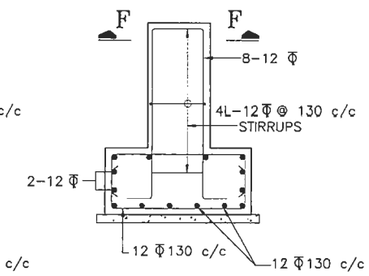


SECTION E–E

(RENF. DETAIL)

(SCALE 1:50

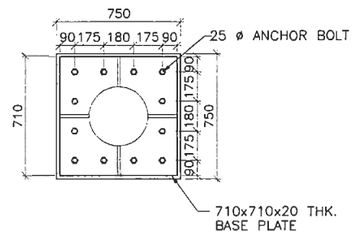


DETAIL AT COLUMN BASE

(SCALE 1:25)

| EMPLOYER | PROJECT | DESIGN CONSULTANT | | | | | | |
|---|---|---|---|---|---|---|---|---|
| Government of Nepal<br>Ministry of Physical Infrastructure and Transport<br>**Department of Roads**<br>**Development Cooperation Implementation Division** | Nepal India Regional Trade and Transport Project<br>(NIRTTP)<br>(IDA CREDIT No. 5273 - NEP)<br>Detailed Design for Improvement of Kathmandu (Nagdhunga) - Naubise - Mugling Road and Bridges | Intercontinental Consultants & Technocrats Pvt. Ltd.<br>A-8, Green Park, New Delhi - 110016<br>Ph : 4086-3000, Fax 2685-5252<br>In Joint Venture With<br>Soosung Engineering Co. Ltd., South Korea<br>In Association With<br>Full Bright Consultancy (Pvt.) Ltd.<br>316,Baburam Acharya Sadak<br>Sinamangal, Kathmandu, GPO Box: 4970, Kathmandu, Nepal | Designed By | SB | **DRAWING NAME:**<br>FOUNDATION & PEDESTAL DETAILS OF STAIR & RAMP PORTION FOOT OVER BRIDGE FOR 21M CARRIAGEWAY | **Scale:**<br>AS SHOWN | **Date:**<br>August 2019 |
| | | | Checked By | PMS | | | **Drawing No.:**<br>NNMR-TYP 08-09 |
| | | | Approved By | BNS | | | |

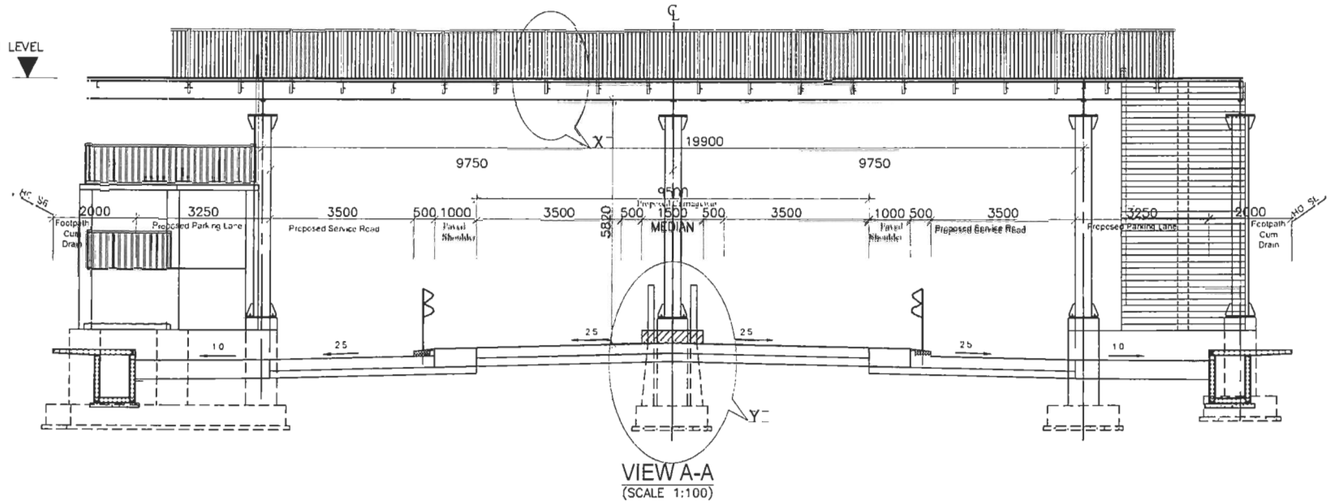


VIEW A-A
(SCALE 1:100)

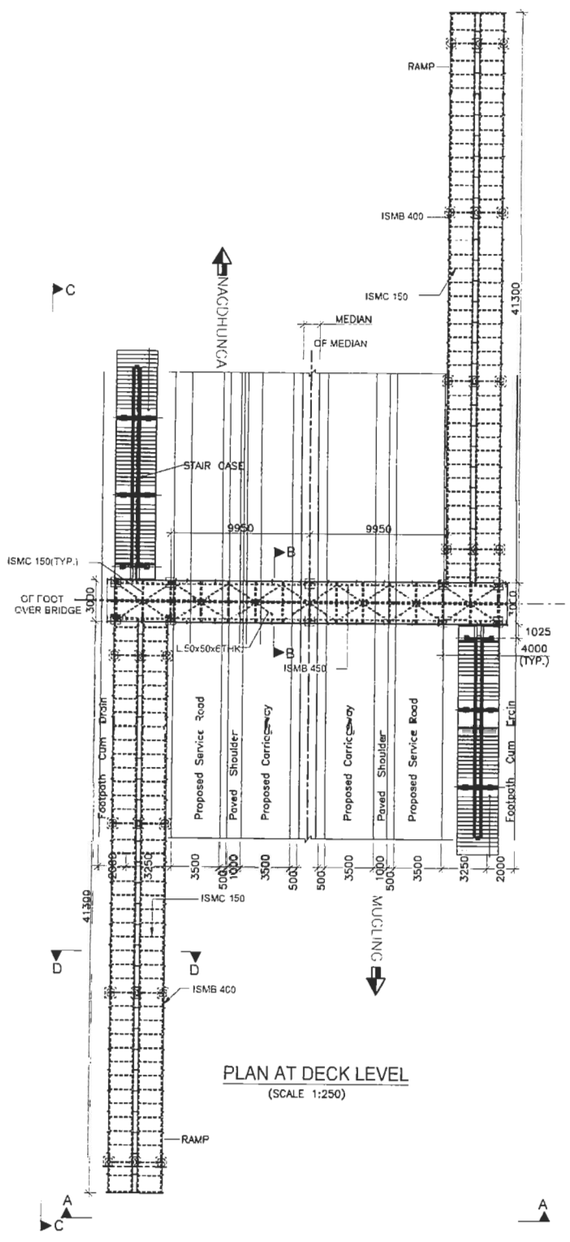


PLAN AT DECK LEVEL
(SCALE 1:250)

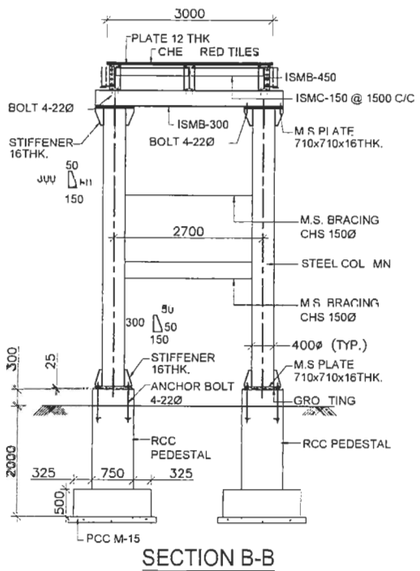


SECTION B-B
(SCALE 1:75)

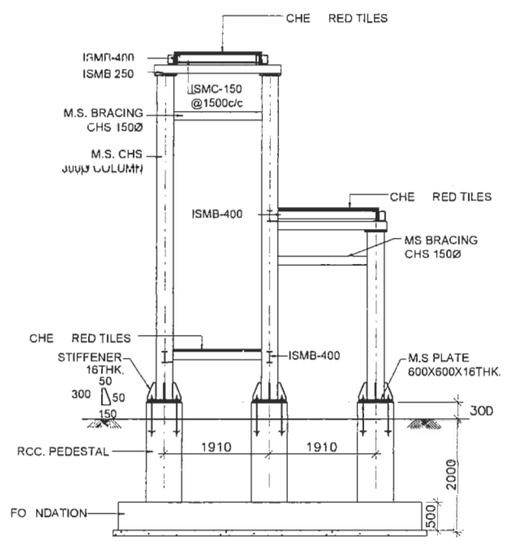


SECTION D-D
(SCALE 1:75)

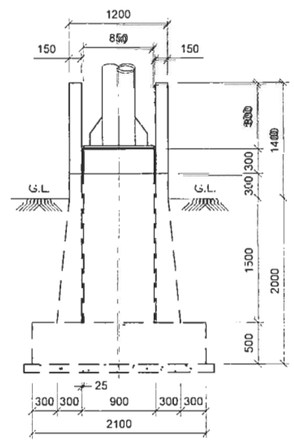


DETAIL Y
(SCALE 1:25)

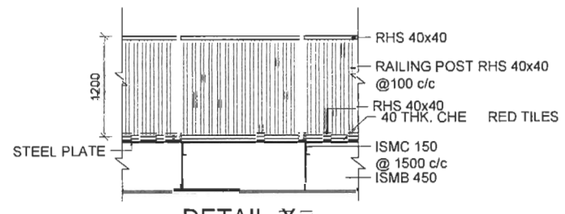


DETAIL X
(SCALE 1:50)

NOTES:-

1. ALL DIMENSIONS ARE IN MM AND LEVELS ARE IN METERS.
2. ONLY WRITTEN DIMENSIONS TO BE FOLLOWED.
3. ALL STRUCTURAL STEEL SHALL CONFORM TO IS:2062-2006 GRADE Fe 410.
4. ALL WELDING SHALL CONFORM TO IS:816-1969 AND IS:1323-1982.
5. ERECTION BOLTS AND NUTS SHALL CONFORM TO IS:1363-1967 AND IS:1367-(PART-3) 2002.
6. FABRICATION AND ERECTION OF STRUCTURAL STEEL WORKS SHALL CONFORM TO IRC:24-20010 (SECTION-V), IS:7205-1974 AND IS:7215-1974.
7. ALL HOLES FOR HSFG BOLTS AND ERECTION BOLTS SHALL BE DRILLED.
8. ALL HOLES NECESSARY FOR ERECTION BOLTS SHALL BE PLUGGED FULLY AFTER SUCCESSFUL COMPLETION OF ERECTION WORK.
9. ALL WELDS SHALL BE 6mm CONT. FILLET UNLESS NOTED OTHERWISE.
10. CUTTING LENGTH OF GUSSET PLATES TO BE FINALIZED BY FULL SCALE SHOP LAYOUT.
11. FABRICATION DRAWING SHOULD BE PREPARED BY THE CONTRACTOR AND APPROVED BY THE ENGINEER BEFORE CONSTRUCTION.
12. ALL DIMENSIONS TO BE CONFIRMED AT SITE BEFORE CUTTING OF MEMBERS.
13. ALL FOUNDATION DETAILS MAY BE FINALIZED ONLY AFTER HAVING GEOTECHNICAL INVESTIGATIONS REPORT. THIS MAY ALSO AFFECT THE FINAL DETAILS/LEVELS OF COLUMN BASE PLATES.
14. LOCATIONS AND DETAILS OF FIELD SPLICES FOR ERECTION OF THE STRUCTURAL SYSTEM SHALL BE PROPOSED BY THE STEEL FABRICATOR.
15. THE FOB WILL BE DESIGNED FOR FOOTWAY LIVE LOAD AS PER CLAUSE 206 OF IRC: 6-2017.
16. STEEL RAILINGS SHALL BE OF HOLLOW TUBULAR SECTIONS AS APPROVED BY ENGINEER-INCHARGE.
17. SAFE BEARING CAPACITY UNDER FOOTING OF PIER AND COLUMNS, UNDER STAIRCASE IS 20t/sqm. THIS MAY BE ENSURED AT SITE BEFORE EXECUTION OF WORK ANY DEVIATION IN SBC IN SOIL REPORT FROM CONSIDERED SBC IS DESIGN SHALL BE REPORT TO ENGINEER FOR CHANGES IN DESIGN.
18. WHILE EXCAVATING FOR FOOTING PRECAUTIONS WILL BE TAKEN TO PROTECT THE EXISTING DUCTS AND OTHER SERVICES ENCOUNTERED IN THE AREA OF EXCAVATION.

NOTES ON PROTECTIVE SURFACE COATING

1. SURFACE PREPARATION GRIT BLASTING TO GRADE SP 2.5 AS PER IS:9954.
2. ONE COAT OF FOLLOWED BY ONE COAT OF ZINC CHROMATE OXIDE PRIMER TO IS:2074.
3. TWO FINISHING COATS OF ALUMINIUM PAINT TO IS:2339 OVER PRIMER COATS ONE COAT SHALL BE APPLIED BEFORE THE FABRICATED STEEL WORK LEAVES THE SHOP.

**THE FOUNDATION SIZE SHALL BE REVIEWED BASED ON GEOTECHNICAL INVESTIGATION CARRIED OUT AT SITE**

| EMPLOYER | PROJECT | DESIGN CONSULTANT | | | | DRAWING NAME: | Scale: | Date: |
|---|---|---|---|---|---|---|---|---|
| Government of Nepal<br>Ministry of Physical Infrastructure and Transport<br>**Department of Roads**<br>**Development Cooperation Implementation Division** | Nepal India Regional Trade and Transport Project<br>(NIRTTP)<br>(IDA CREDIT No. 5273 - NEP)<br>Detailed Design for Improvement of Kathmandu (Nagdhunga) - Naubise - Mugling Road and Bridges | Intercontinental Consultants & Technocrats Pvt. Ltd.<br>A-8, Green Park, New Delhi - 110016<br>Ph : 4086-3000, Fax 2685-5252<br>In Joint Venture With<br>Soosung Engineering Co. Ltd., South Korea | In Association With<br>Full Bright Consultancy (Pvt.) Ltd.<br>316,Baburam Acharya Sadak<br>Sinamangal, Kathmandu, GPO Box: 4970, Kathmandu, Nepal | Designed By<br>Checked By<br>Approved By | SB<br>PMS<br>BNS | TYPICAL GENERAL ARRANGEMENT OF FOOT OVER BRIDGE FOR 30M CARRIAGEWAY | AS SHOWN | August 2019<br>**Drawing No.:**<br>NNMR-TYP 08-10 |

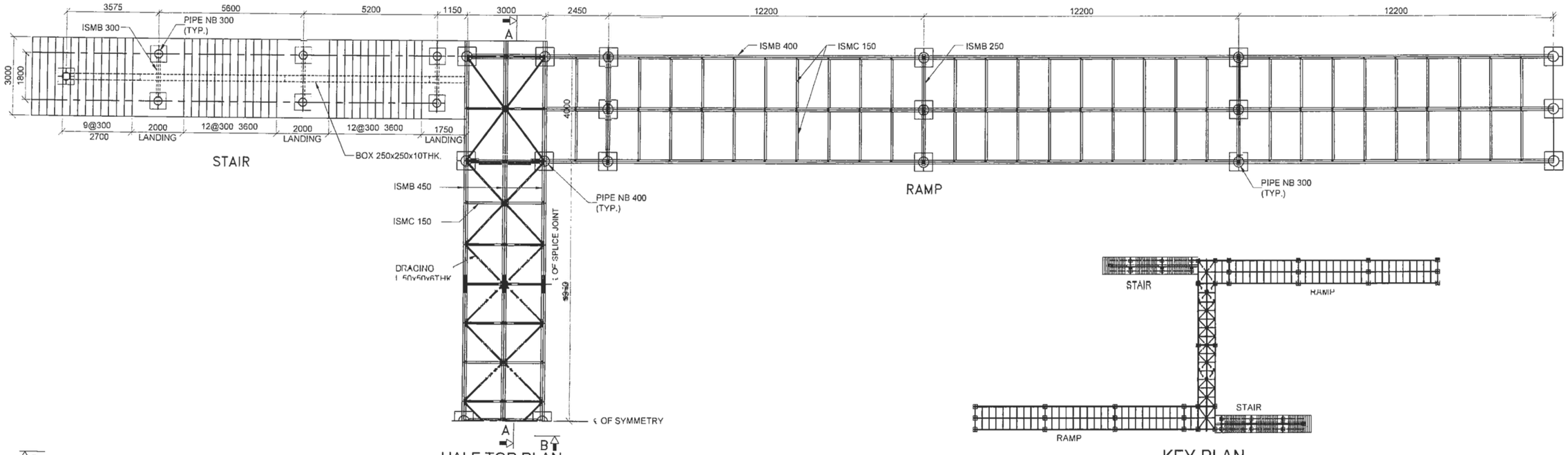


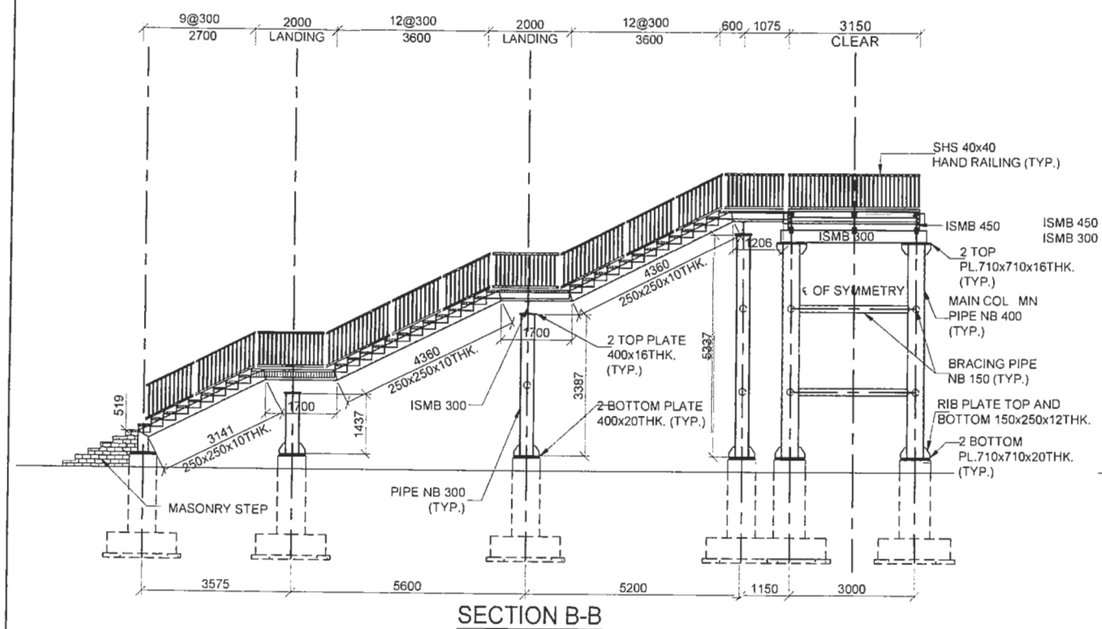


SECTION B-B
(SCALE 1:100)

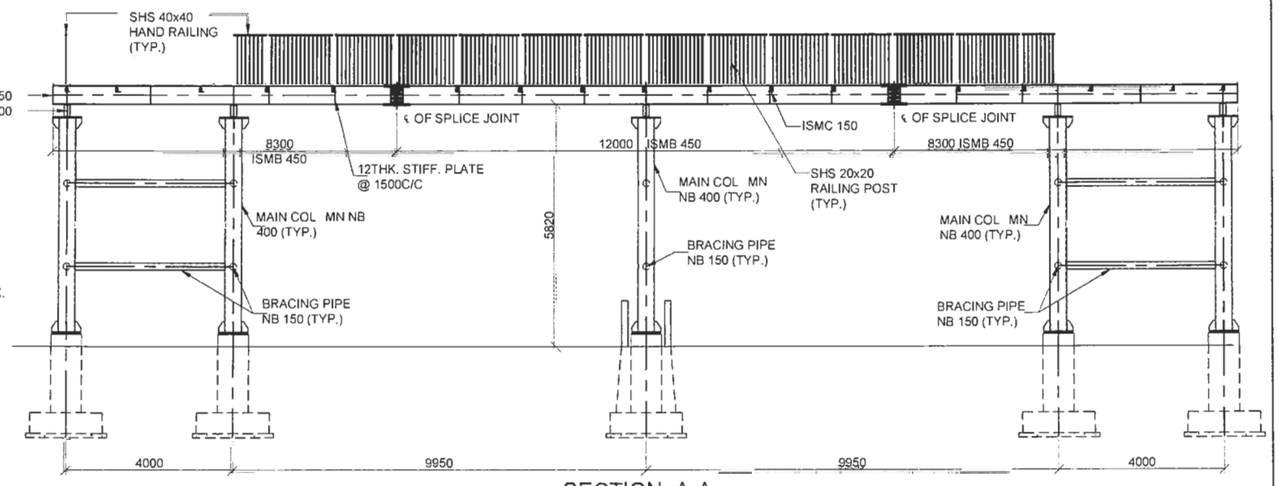


SECTION A-A
(SCALE 1:100)

| EMPLOYER | PROJECT | DESIGN CONSULTANT | | | | DRAWING NAME: | Scale: | Date: |
|---|---|---|---|---|---|---|---|---|
| Government of Nepal<br>Ministry of Physical Infrastructure and Transport<br>**Department of Roads**<br>**Development Cooperation Implementation Division** | Nepal India Regional Trade and Transport Project (NIRTTP)<br>(IDA CREDIT No. 5273 - NEP)<br>Detailed Design for Improvement of Kathmandu (Nagdhunga) - Naubise - Mugling Road and Bridges | Intercontinental Consultants & Technocrats Pvt. Ltd.<br>A-8, Green Park, New Delhi - 110016<br>Ph : 4086-3000, Fax 2685-5252<br>In Joint Venture With<br>Soosung Engineering Co. Ltd., South Korea | In Association With<br>Full Bright Consultancy (Pvt.) Ltd.<br>316,Baburam Acharya Sadak<br>Sinamangal, Kathmandu, GPO<br>Box: 4970, Kathmandu, Nepal | Designed By<br>Checked By<br>Approved By | SB<br>PMS<br>BNS | TYPICAL GENERAL ARRANGEMENT MARKING PLAN OF FOOT OVER BRIDGE FOR 30M CARRIAGEWAY | AS SHOWN | August 2019<br>**Drawing No.:**<br>NNMR-TYP 08-11 |

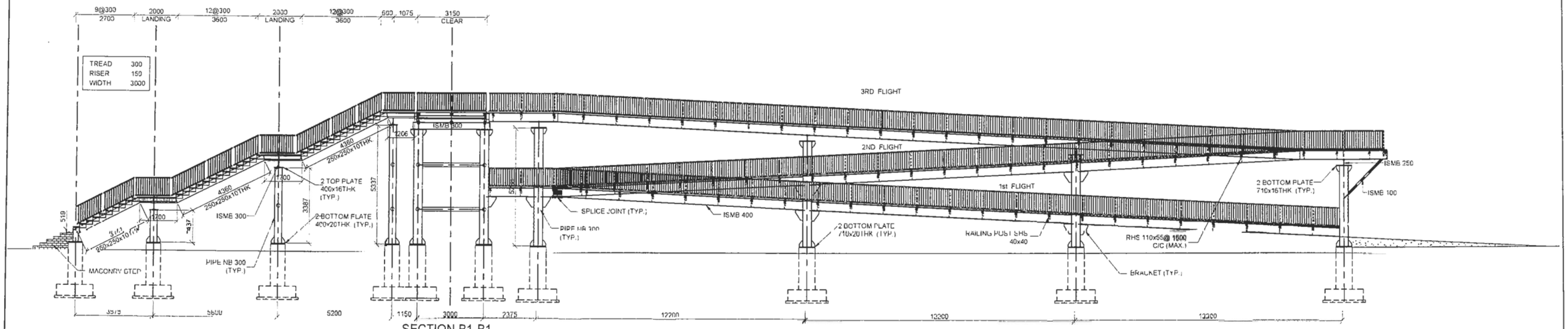


SECTION B1-B1

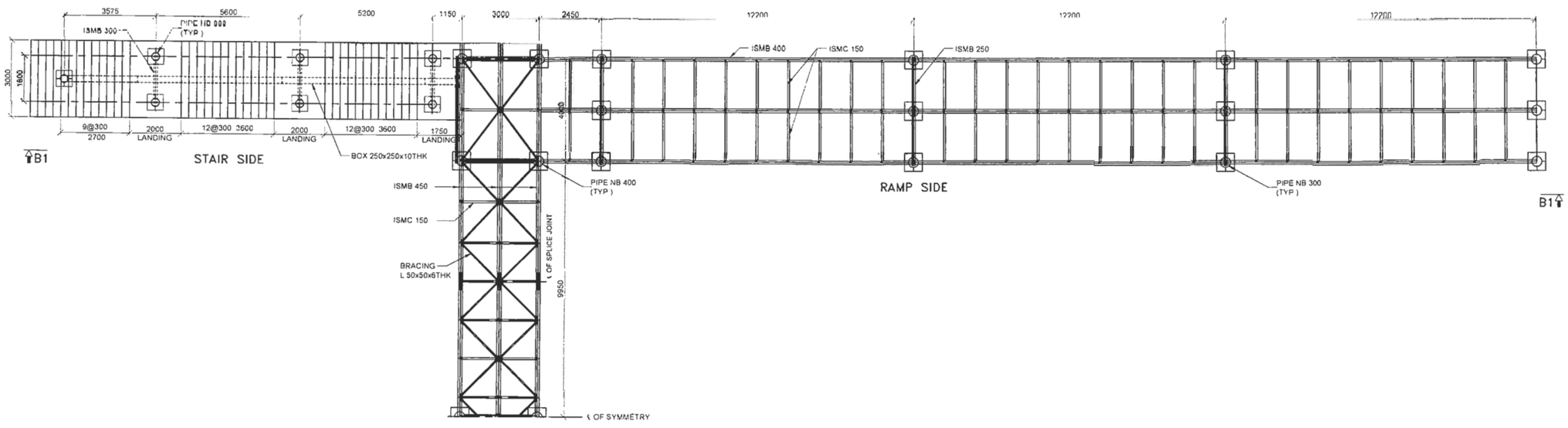


HALF TOP PLAN

| EMPLOYER | PROJECT | DESIGN CONSULTANT | | | | DRAWING NAME: | Scale: | Date: |
|---|---|---|---|---|---|---|---|---|
| Government of Nepal<br>Ministry of Physical Infrastructure and Transport<br>**Department of Roads**<br>**Development Cooperation Implementation Division** | Nepal India Regional Trade and Transport Project (NIRTTP)<br>(IDA CREDIT No. 5273 - NEP)<br>Detailed Design for Improvement of Kathmandu (Nagdhunga) - Naubise - Mugling Road and Bridges | Intercontinental Consultants & Technocrats Pvt. Ltd.<br>A-8, Green Park, New Delhi - 110016<br>Ph : 4086-3000, Fax 2685-5252<br>In Joint Venture With<br>Soosung Engineering Co. Ltd., South Korea | In Association With<br>Full Bright Consultancy (Pvt.) Ltd.<br>316,Baburam Acharya Sadak<br>Sinamangal, Kathmandu, GPO Box: 4970, Kathmandu, Nepal | Designed By | SB | TYPICAL GENERAL ARRANGEMENT MARKING PLAN OF FOOT OVER BRIDGE FOR 30M CARRIAGEWAY | AS SHOWN | August 2019 |
| | | | | Checked By | PMS | | | **Drawing No.:** NNMR-TYP 08-12 |
| | | | | Approved By | BNS | | | |

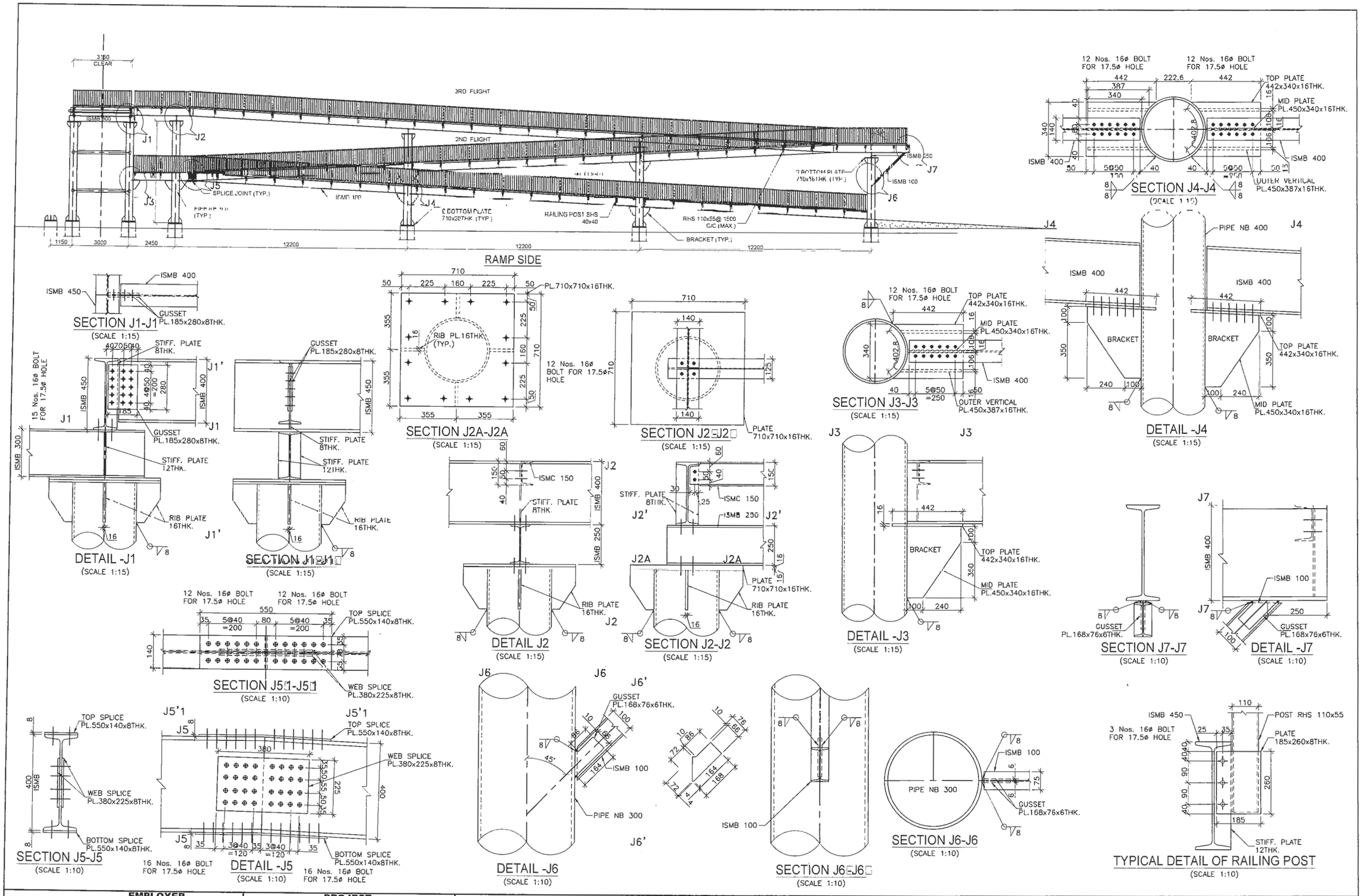


| EMPLOYER | PROJECT | DESIGN CONSULTANT | | | | | |
|---|---|---|---|---|---|---|---|
| Government of Nepal<br>Ministry of Physical Infrastructure and Transport<br>**Department of Roads**<br>**Development Cooperation Implementation Division** | Nepal India Regional Trade and Transport Project<br>(NIRTTP)<br>(IDA CREDIT No. 5273 - NEP)<br>Detailed Design for Improvement of Kathmandu (Nagdhunga) - Naubise - Mugling Road and Bridges | Intercontinental Consultants & Technocrats Pvt. Ltd.<br>A-8, Green Park, New Delhi - 110016<br>Ph : 4086-3000, Fax 2685-5252<br>In Joint Venture With<br>Soosung Engineering Co. Ltd., South Korea | In Association With<br>Full Bright Consultancy (Pvt.) Ltd.<br>316,Baburam Acharya Sadak<br>Sinamangal, Kathmandu, GPO Box: 4970, Kathmandu, Nepal | Designed By<br>Checked By<br>Approved By | SB<br>PMS<br>BNS | **DRAWING NAME:**<br>TYPICAL CONNECTION DETAILS OF FOOT OVER BRIDGE FOR 30M CARRIAGEWAY | **Scale:**<br>AS SHOWN<br>**Date:**<br>August 2019<br>**Drawing No.:**<br>NNMR-TYP 08-13 |

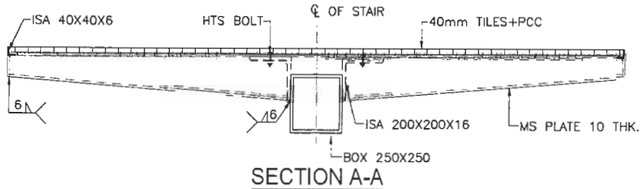


SECTION A-A
(SCALE 1:20)

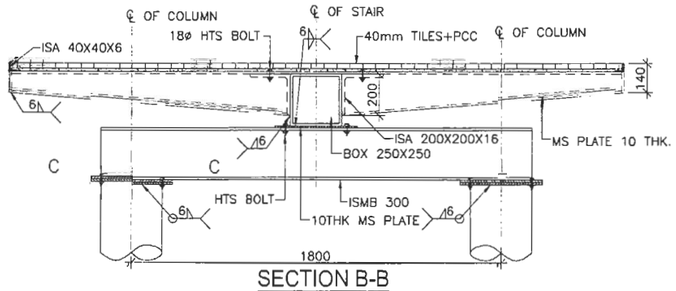


SECTION B-B
(SCALE 1:20)

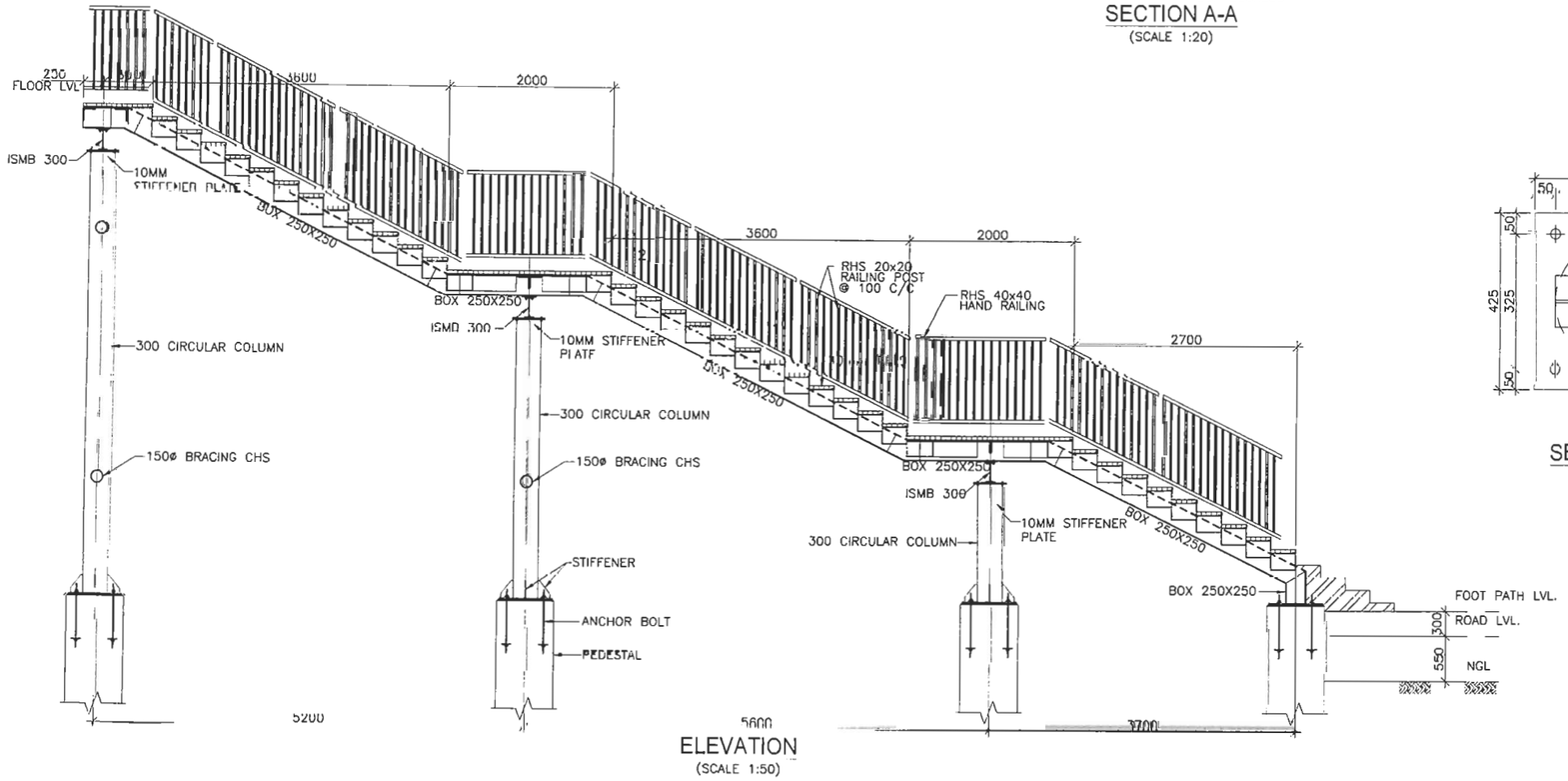


ELEVATION
(SCALE 1:50)

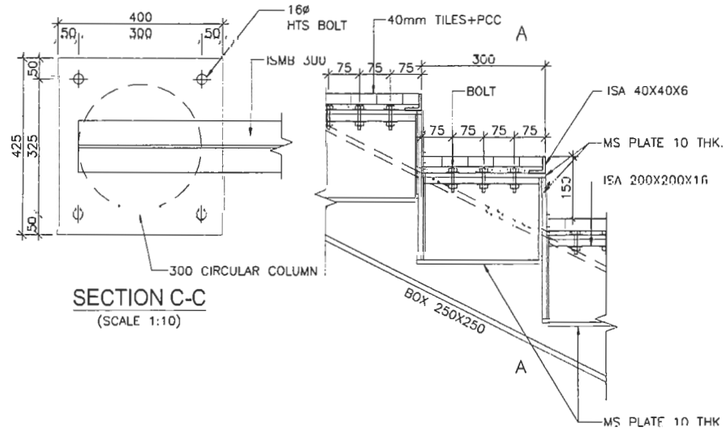


SECTION C-C
(SCALE 1:10)

DETAIL - 1
(SCALE 1:10)

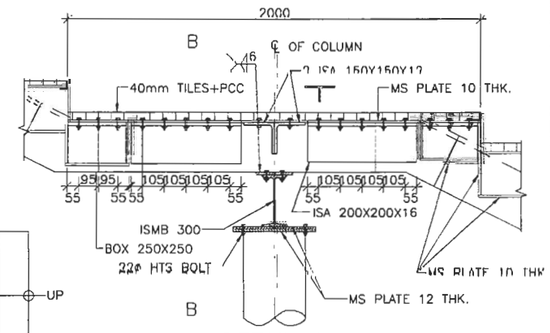


DETAIL - 2
(SCALE 1:20)

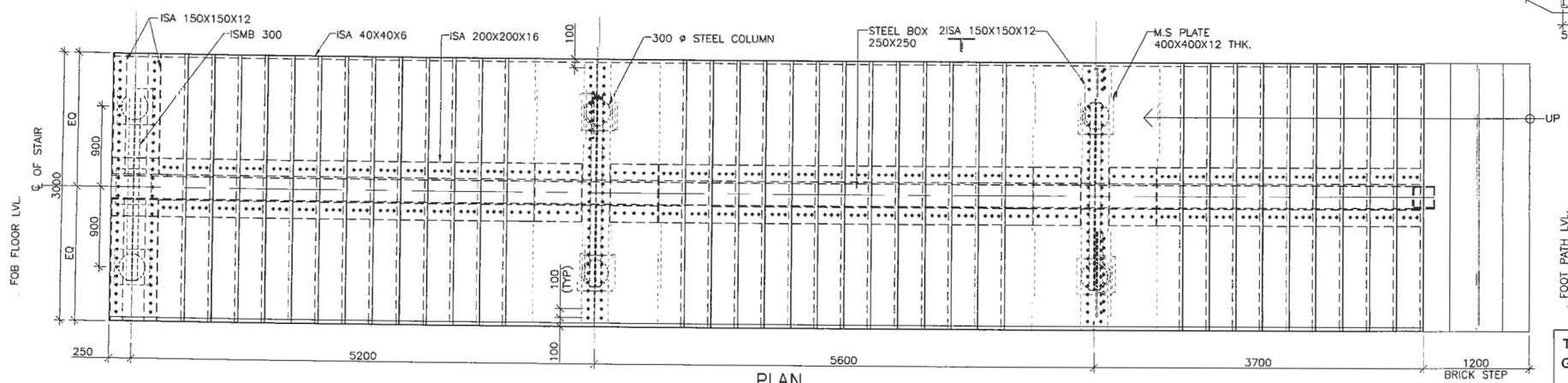


PLAN
(SCALE 1:40)

**THE FOUNDATION SIZE SHALL BE REVIEWED BASED ON GEOTECHNICAL INVESTIGATION CARRIED OUT AT SITE**

| EMPLOYER | PROJECT | DESIGN CONSULTANT | | | | | |
|---|---|---|---|---|---|---|---|
| Government of Nepal<br>Ministry of Physical Infrastructure and Transport<br>**Department of Roads**<br>**Development Cooperation Implementation Division** | Nepal India Regional Trade and Transport Project (NIRTTP)<br>(IDA CREDIT No. 5273 - NEP)<br>Detailed Design for Improvement of Kathmandu (Nagdhunga) - Naubise - Mugling Road and Bridges | Intercontinental Consultants & Technocrats Pvt. Ltd.<br>A-8, Green Park, New Delhi - 110016<br>Ph : 4086-3000, Fax 2685-5252<br>In Joint Venture With<br>Soosung Engineering Co. Ltd., South Korea | In Association With<br>Full Bright Consultancy (Pvt.) Ltd.<br>316,Baburam Acharya Sadak<br>Sinamangal, Kathmandu, GPO Box: 4970, Kathmandu, Nepal | Designed By | SB | **DRAWING NAME:**<br>TYPICAL CONNECTION DETAILS OF FOOT OVER BRIDGE FOR 30M CARRIAGEWAY | **Scale:**<br>AS SHOWN |
| | | | | Checked By | PMS | | **Date:**<br>August 2019 |
| | | | | Approved By | BNS | | **Drawing No.:**<br>NNMR-TYP 08-14 |

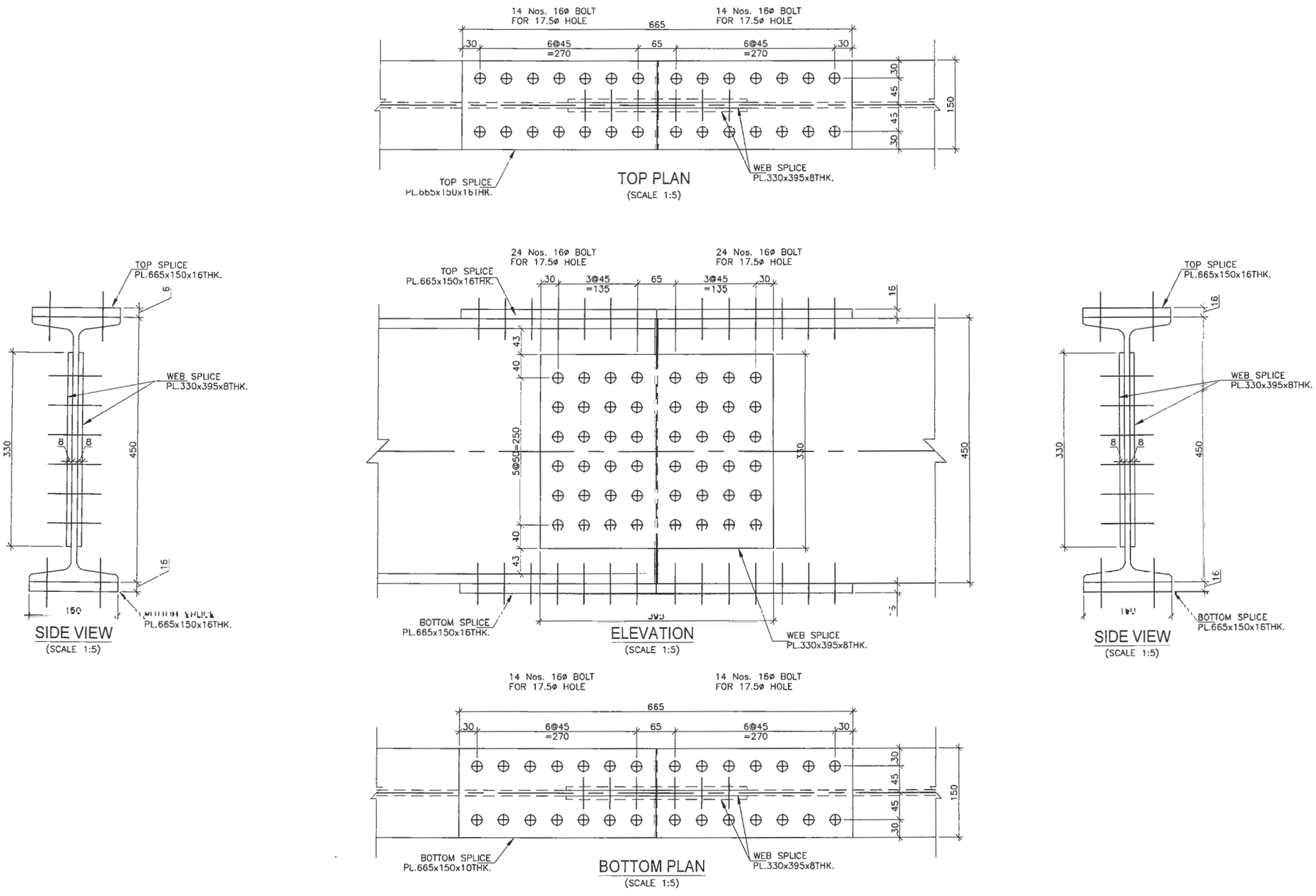


| EMPLOYER | PROJECT | DESIGN CONSULTANT | | | | | |
|---|---|---|---|---|---|---|---|
| Government of Nepal<br>Ministry of Physical Infrastructure and Transport<br>**Department of Roads**<br>**Development Cooperation Implementation Division** | Nepal India Regional Trade and Transport Project (NIRTTP)<br>(IDA CREDIT No. 5273 - NEP)<br>Detailed Design for Improvement of Kathmandu (Nagdhunga) - Naubise - Mugling Road and Bridges | Intercontinental Consultants & Technocrats Pvt. Ltd.<br>A-8, Green Park, New Delhi - 110016<br>Ph : 4086-3000, Fax 2685-5252<br>In Joint Venture With<br>Soosung Engineering Co. Ltd., South Korea<br>FBC | In Association With<br>Full Bright Consultancy (Pvt.) Ltd.<br>316,Baburam Acharya Sadak<br>Sinamangal, Kathmandu, GPO Box: 4970, Kathmandu, Nepal | Designed By | SB | **DRAWING NAME:**<br>TYPICAL SPLICE JOINT DETAILS OF FOOT OVER BRIDGE<br>FOR 30M CARRIAGEWAY | **Scale:**<br>AS SHOWN |
| | | | | Checked By | PMS | | **Date:**<br>August 2019 |
| | | | | Approved By | BNS | | **Drawing No.:**<br>NNMR-TYP 08-15 |

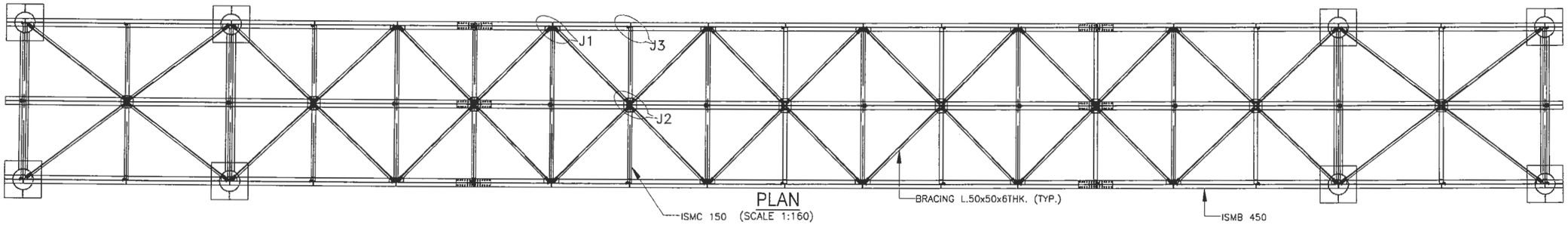


PLAN
(SCALE 1:160)

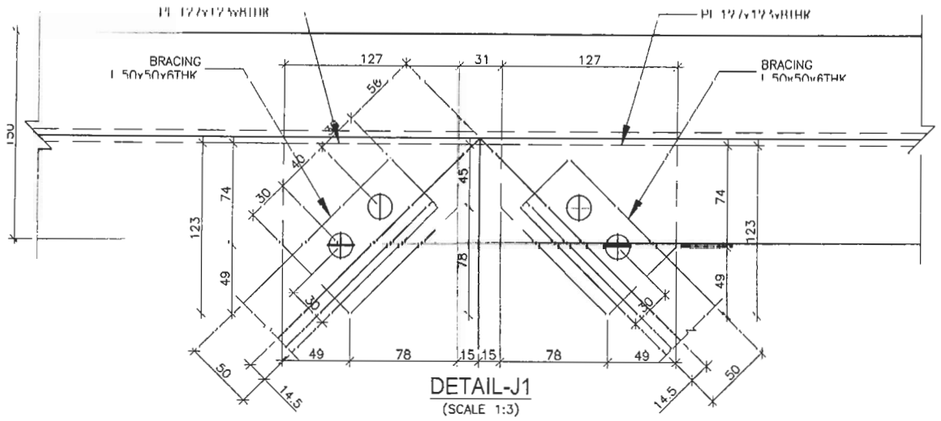


DETAIL-J1
(SCALE 1:3)

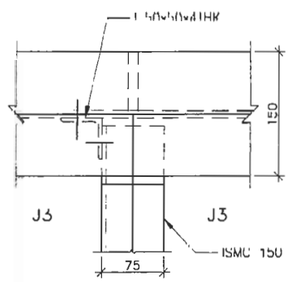


DETAIL-J3
(SCALE 1:5)

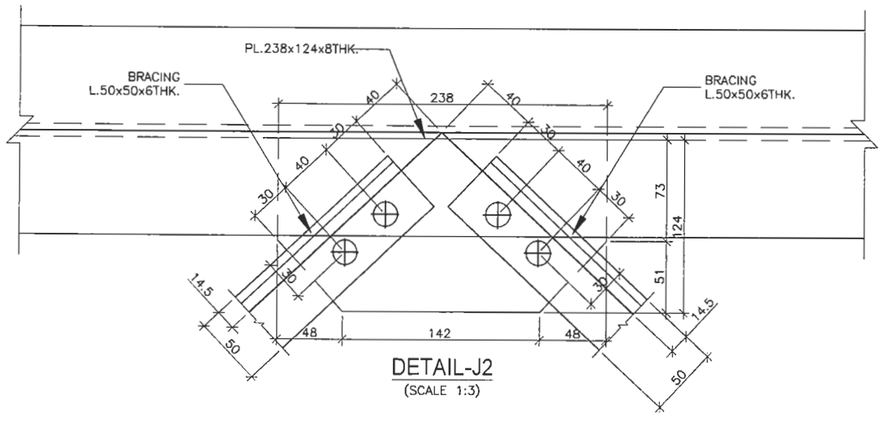


DETAIL-J2
(SCALE 1:3)

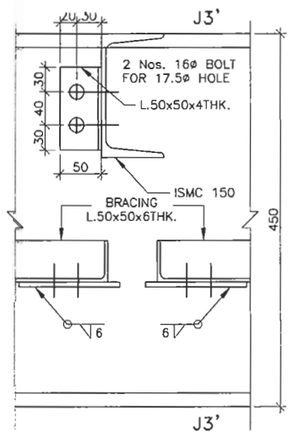


SECTION J3-J3
(SCALE 1:5)

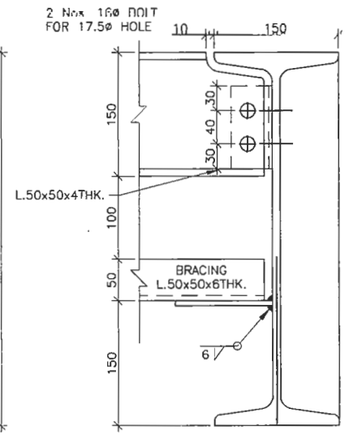


SECTION J3-J3
(SCALE 1:5)

| EMPLOYER | PROJECT | DESIGN CONSULTANT | | | | | |
|---|---|---|---|---|---|---|---|
| Government of Nepal<br>Ministry of Physical Infrastructure and Transport<br>**Department of Roads**<br>**Development Cooperation Implementation Division** | Nepal India Regional Trade and Transport Project (NIRTTP)<br>(IDA CREDIT No. 5273 - NEP)<br>Detailed Design for Improvement of Kathmandu (Nagdhunga) - Naubise - Mugling Road and Bridges | Intercontinental Consultants & Technocrats Pvt. Ltd.<br>A-8, Green Park, New Delhi - 110016<br>Ph : 4086-3000, Fax 2685-5252<br>In Joint Venture With<br>Soosung Engineering Co. Ltd., South Korea | In Association With<br>Full Bright Consultancy (Pvt.) Ltd.<br>316,Baburam Acharya Sadak<br>Sinamangal, Kathmandu, GPO<br>Box: 4970, Kathmandu, Nepal | Designed By | SB | **DRAWING NAME:**<br>TYPICAL BRACING CONNECTION DETAILS OF FOOT OVER BRIDGE FOR 30M CARRIAGEWAY | **Scale:**<br>AS SHOWN |
| | | | | Checked By | PMS | | **Date:**<br>August 2019 |
| | | | | Approved By | BNS | | **Drawing No.:**<br>NNMR-TYP 08-16 |

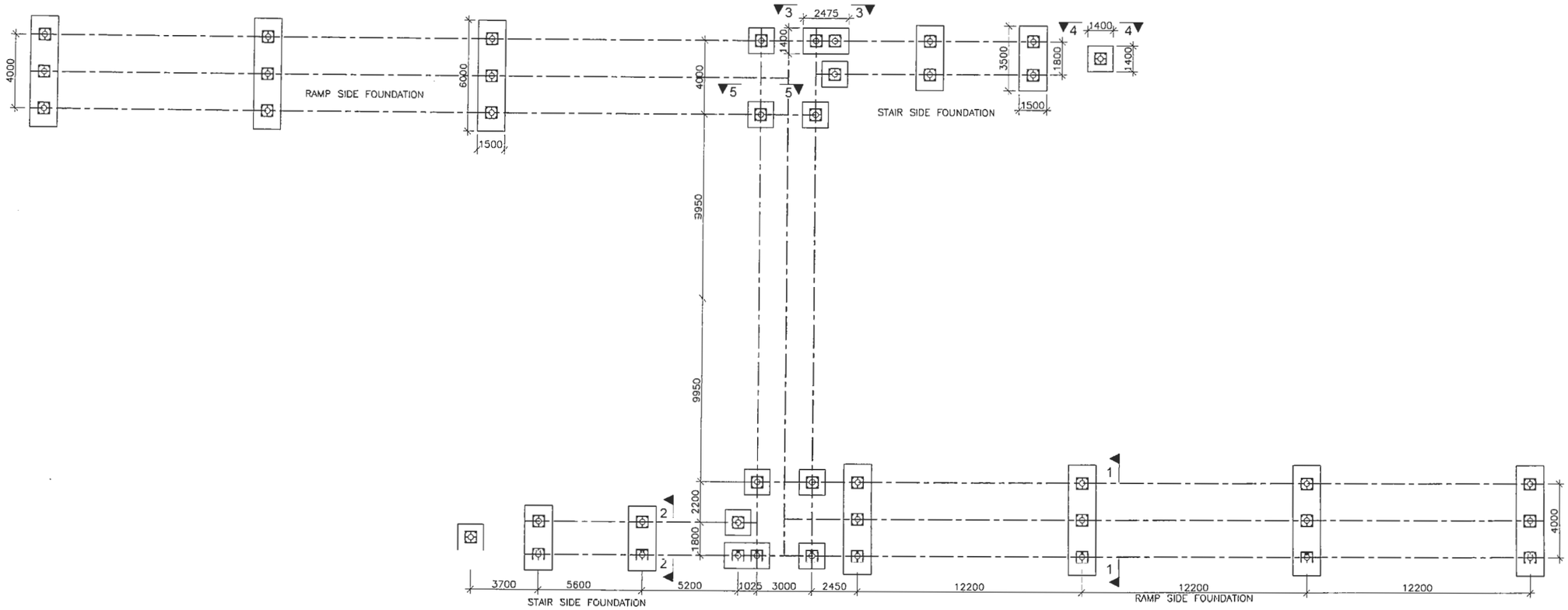


PLAN AT FOUNDATION LEVEL

(SCALE 1:175)

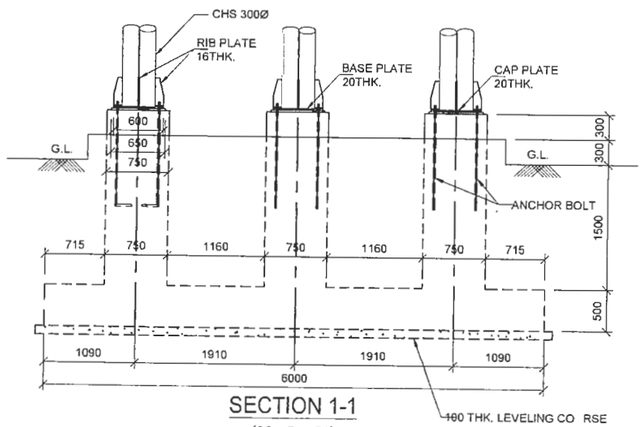


SECTION 1-1

(SCALE 1:50)

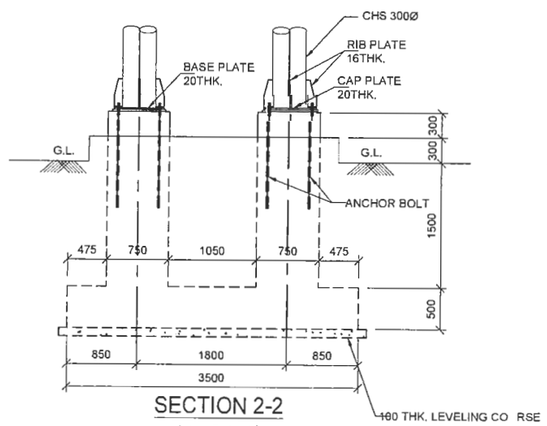


SECTION 2-2

(SCALE 1:50)

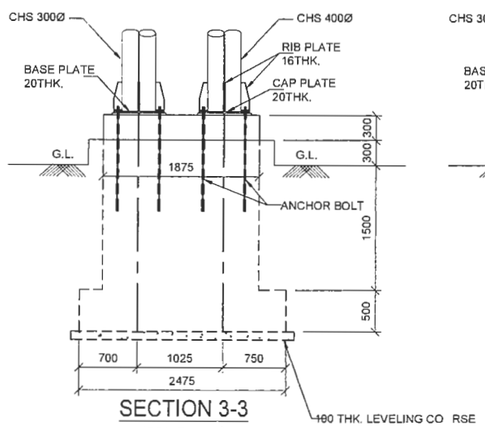


SECTION 3-3

(SCALE 1:50)

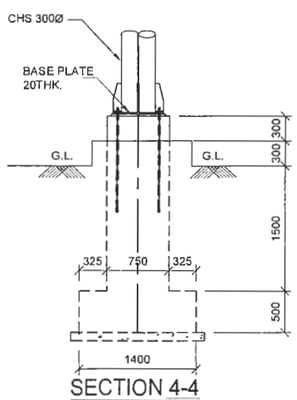


SECTION 4-4

(SCALE 1:50)

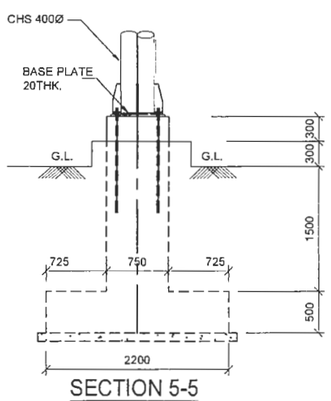


SECTION 5-5

(SCALE 1:50)

| EMPLOYER | PROJECT | DESIGN CONSULTANT | | | | | |
|---|---|---|---|---|---|---|---|
| Government of Nepal<br>Ministry of Physical Infrastructure and Transport<br>**Department of Roads**<br>**Development Cooperation Implementation Division** | Nepal India Regional Trade and Transport Project<br>(NIRTTP)<br>(IDA CREDIT No. 5273 - NEP)<br>Detailed Design for Improvement of Kathmandu (Nagdhunga) - Naubise - Mugling Road and Bridges | Intercontinental Consultants & Technocrats Pvt. Ltd.<br>A-8, Green Park, New Delhi - 110016<br>Ph : 4086-3000, Fax 2685-5252<br>In Joint Venture With<br>Soosung Engineering Co. Ltd., South Korea | In Association With<br>Full Bright Consultancy (Pvt.) Ltd.<br>316,Baburam Acharya Sadak<br>Sinamangal, Kathmandu, GPO Box: 4970, Kathmandu, Nepal | Designed By | SB | **DRAWING NAME:**<br>DIMENSION DETAILS OF FOUNDATION OF FOOT OVER BRIDGE FOR 30M CARRIAGEWAY | **Scale:**<br>AS SHOWN |
| | | | | Checked By | PMS | | **Date:**<br>August 2019 |
| | | | | Approved By | BNS | | **Drawing No.:**<br>NNMR-TYP 08-17 |

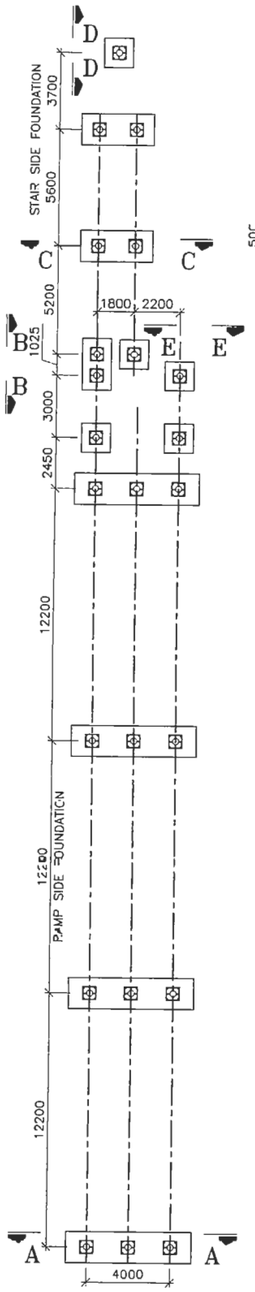


COLUMN LAYOUT PLAN
(SCALE 1:200)

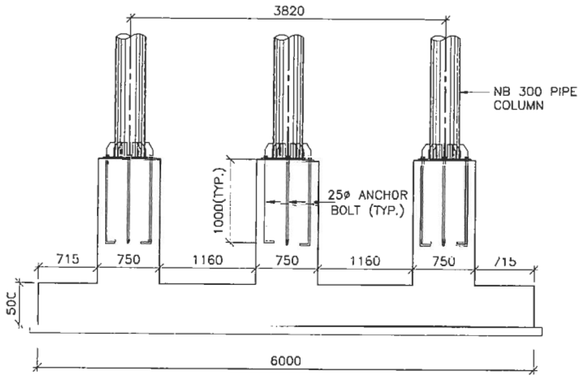


SECTION A–A
(SCALE 1:50

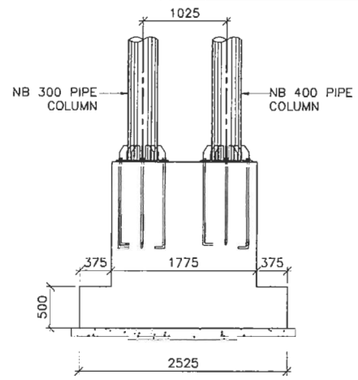


SECTION B–B
(SCALE 1:50

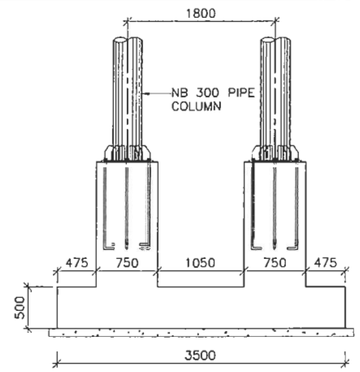


SECTION C–C
(SCALE 1:50

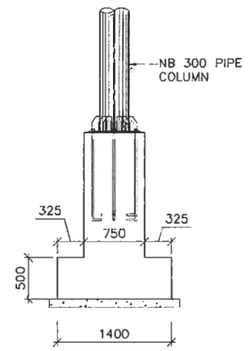


SECTION D–D
(SCALE 1:50

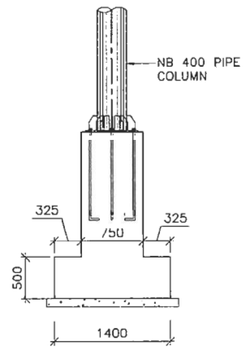


SECTION E–E
(SCALE 1:50

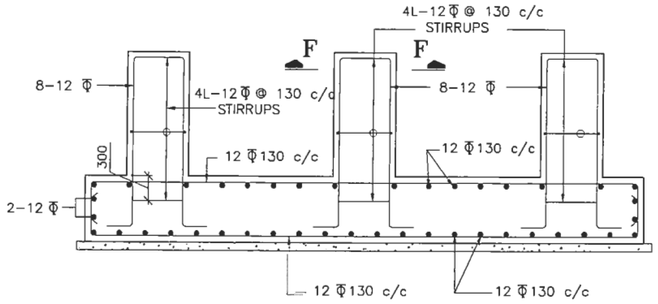


SECTION A–A
(RENF. DETAIL)
(SCALE 1:50

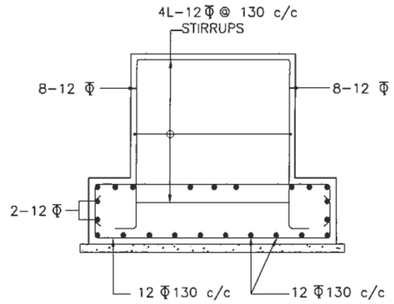


SECTION B–B
(RENF. DETAIL)
(SCALE 1:50

## NOTES

1. ALL DIMENSIONS ARE IN MILLIMETRES, UNLESS OTHERWISE MENTIONED. ONLY WRITTEN DIMENSIONS ARE TO BE FOLLOWED. NO DIMENSION IS TO BE SCALED.
2. CONCRETE SHALL BE DESIGN MIX AND SHALL HAVE MINIMUM 28 DAYS CHARACTERISTIC STRENGTH ON 150mm CUBES AS 35 MPa.
3. ALL REINFORCING STEEL SHALL BE THERMO MECHANICALLY TREATED (TMT) BARS SATISFYING REQUIREMENTS OF HIGH YIELD STRENGTH DEFORMED BARS (GRADE DESIGNATION Fe–500D) CONFORMING TO IS:1786.
4. CLEAR COVER TO OUTER MOST STEEL IS 75mm FOR FOUNDATION.
5. LL REPRESENTS LONGITUDINAL AXIS OF THE BRIDGE AND TT REPRESENTS TRANSVERSE AXIS OF THE BRIDGE.
6. REQUIRED SAFE BEARING CAPACITY UNDER FOOTING OF PIER AND COLUMNS, UNDER STAIRCASE IS 20 t/sqm. THIS MAY BE ENSURED AT SITE.

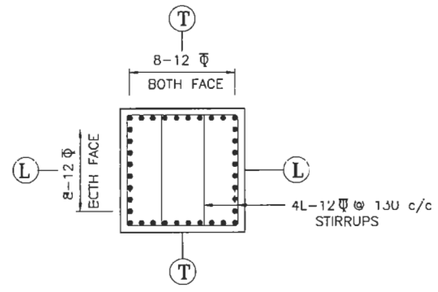


SECTION F–F
(SCALE 1:25)

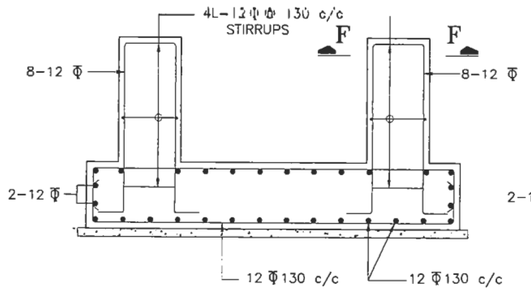


SECTION C–C
(RENF. DETAIL)
(SCALE 1:50

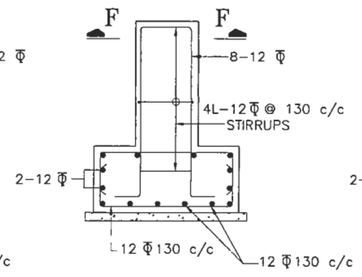


SECTION D–D
(RENF. DETAIL)
(SCALE 1:50

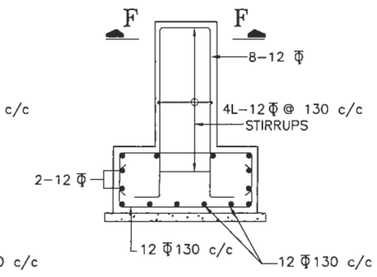


SECTION E–E
(RENF. DETAIL)
(SCALE 1:50

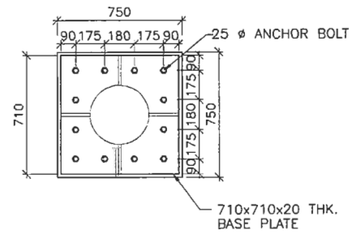


DETAIL AT COLUMN BASE
(SCALE 1:25)

| EMPLOYER | PROJECT | DESIGN CONSULTANT | | | | | |
|---|---|---|---|---|---|---|---|
| Government of Nepal<br>Ministry of Physical Infrastructure and Transport<br>**Department of Roads**<br>**Development Cooperation Implementation Division** | Nepal India Regional Trade and Transport Project (NIRTTP)<br>(IDA CREDIT No. 5273 - NEP)<br>Detailed Design for Improvement of Kathmandu (Nagdhunga) - Naubise - Mugling Road and Bridges | Intercontinental Consultants & Technocrats Pvt. Ltd.<br>A-8, Green Park, New Delhi - 110016<br>Ph : 4086-3000, Fax 2685-5252<br>In Joint Venture With<br>Soosung Engineering Co. Ltd., South Korea | In Association With<br>Full Bright Consultancy (Pvt.) Ltd.<br>316,Baburam Acharya Sadak<br>Sinamangal, Kathmandu, GPO Box: 4970, Kathmandu, Nepal | Designed By | SB | **DRAWING NAME:**<br>FOUNDATION & PEDESTAL DETAILS OF STAIR & RAMP PORTION FOOT OVER BRIDGE FOR 30M CARRIAGEWAY | **Scale:**<br>AS SHOWN |
| | | | | Checked By | PMS | | **Date:**<br>June 2018 |
| | | | | Approved By | BNS | | **Drawing No.:**<br>NNMR-TYP 08-18 |

# GEOGRID WALL DETAILS

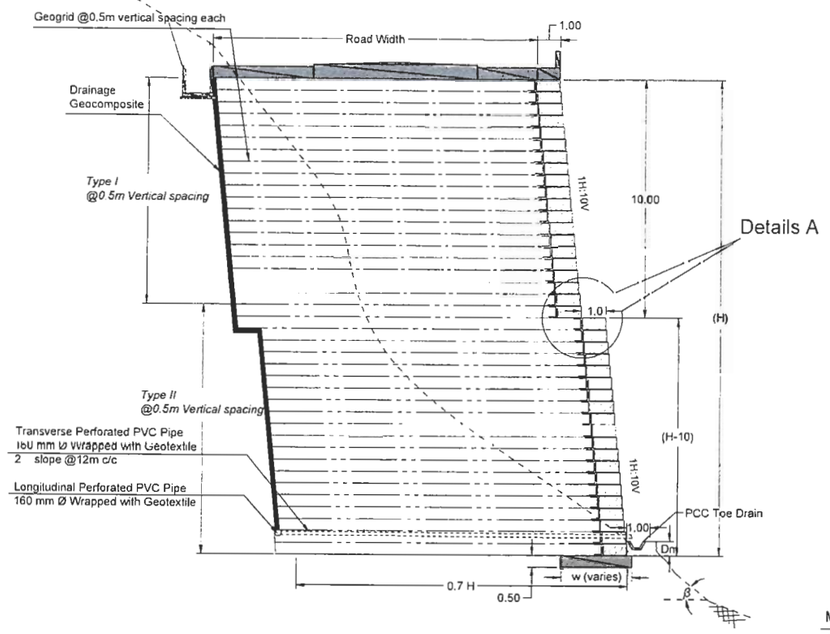


Geogrid Type I:
Typical Cross Section of Reinforced Soil Structure

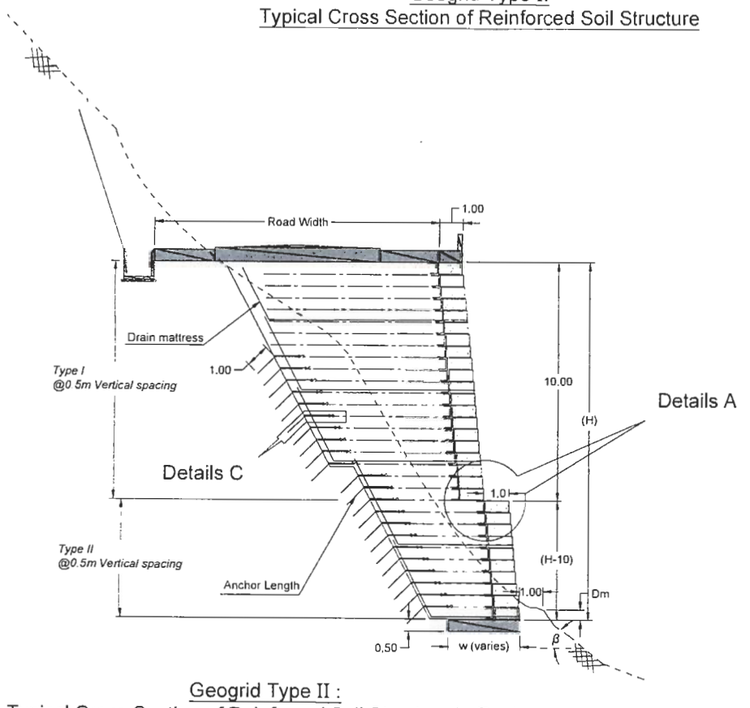


Geogrid Type II :
Typical Cross Section of Reinforced Soil Structure in Rock

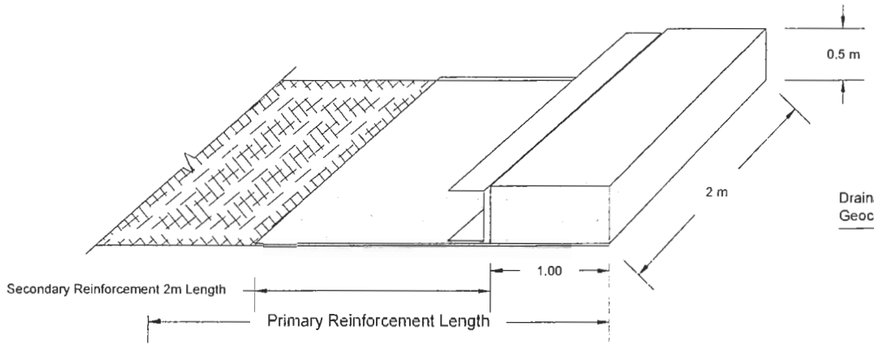


Typical Details of Reinforced soil structure facing □nit

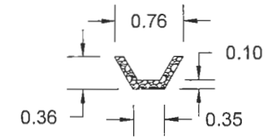


Typical Details of PCC toe drain

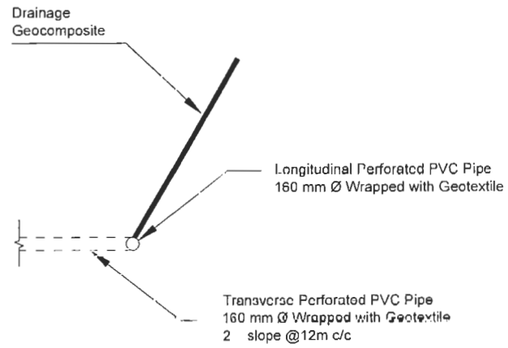


Details of Drainage Geocomposite

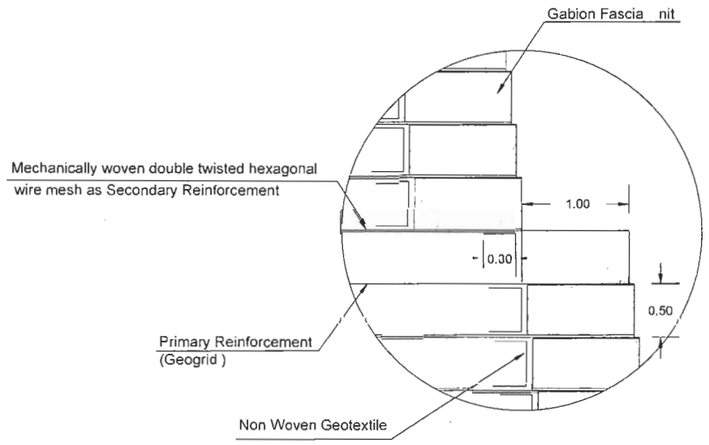


Typical Details A (Reinforced Soil Structure Facing System)

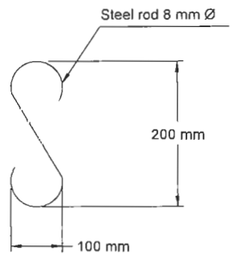


S-Clamp in Geogrid Overlap for Rock anchorage

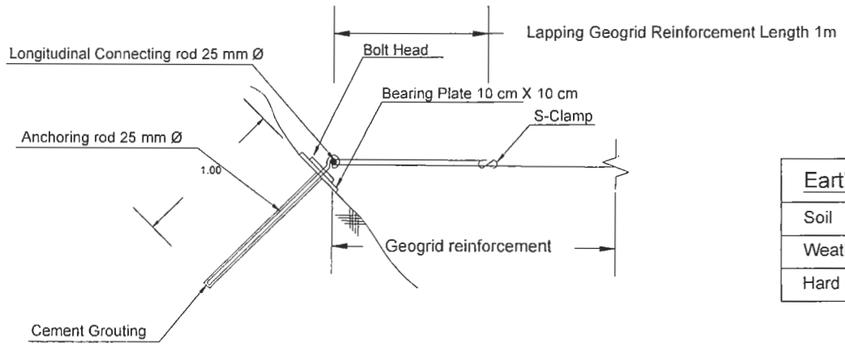


Detail at C for Rock Bolt Anchorage

| Earth Type | Geogrid Type | Drain Type |
|---|---|---|
| Soil | I | Chimney Drain / Drain Mattress (Mac Drain -W1071) (as per site conditions) |
| Weathered Rock | I / II | |
| Hard Rock | II | |

| EMPLOYER | PROJECT | DESIGN CONSULTANT | | | | | |
|---|---|---|---|---|---|---|---|
| Government of Nepal<br>Ministry of Physical Infrastructure and Transport<br>**Department of Roads**<br>**Development Cooperation Implementation Division** | Nepal India Regional Trade and Transport Project (NIRTTP)<br>(IDA CREDIT No. 5273 - NEP)<br>Detailed Design for Improvement of (Nagdhunga) -Naubise - Mugling Road and Bridges | Intercontinental Consultants & Technocrats Pvt. Ltd.<br>A-8, Green Park, New Delhi - 110016<br>Ph : 4086-3000, Fax 2685-5252<br>In Joint Venture With<br>Soosung Engineering Co. Ltd., South Korea<br>FBC<br>In Association With<br>Full Bright Consultancy (Pvt.) Ltd.<br>316,Baburam Acharya Sadak<br>Sinamangal, Kathmandu, GPO<br>Box: 4970, Kathmandu, Nepal | Designed By | SB | | **DRAWING NAME:**<br>TYPICAL GEOGRID DETAILS | **Scale:**<br>0 2.5 5 | **Date:**<br>August 2019 |
| | | | Checked By | PMS | | | | **Drawing No.:**<br>NNMR-TYP 09-01 |
| | | | Approved By | BNS | | | | |

## For H□8-10m

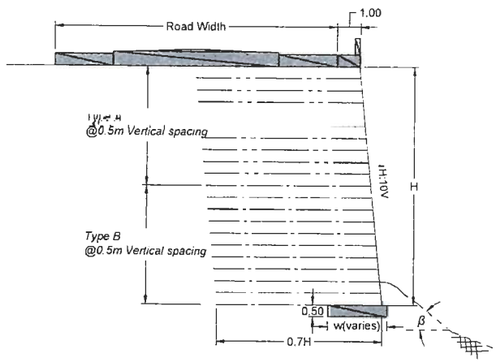


## For H□11-15m

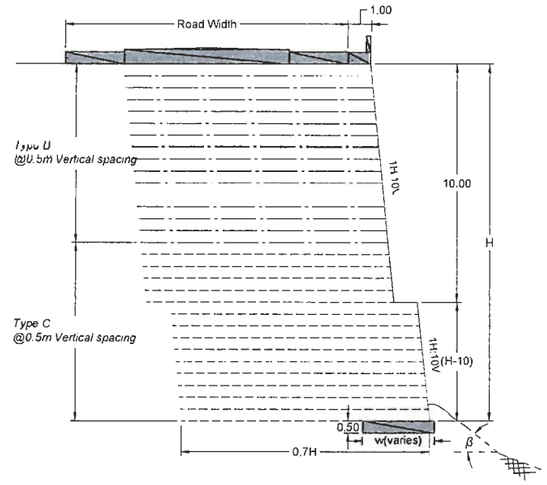


## For H□16-20m

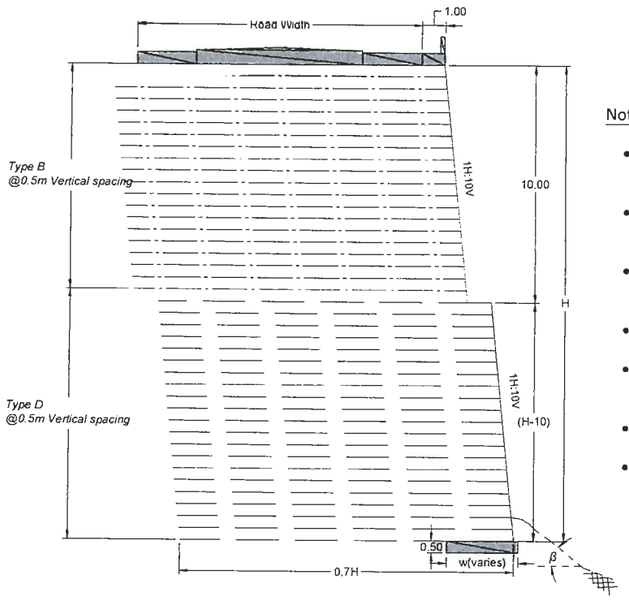


### Notes for structural backfill:

- The structural backfill material should be of good quality free draining granular material and, should be free of organic matter and deleterious substance.
- The maximum particle size should not exceed 75mm and percentage of fines passing 75 micron sieve should not be greater than 15%.
- The plasticity index should be less than 6%. Soil containing mica, gypsum, smectite, montomorrilonite which are soft durable are not recommended.
- Similarly, recycled asphalt and recycled concrete are not recommended to use for structural backfill.
- It should be compacted on a layer of 30cm with minimum of 95% maximum density that lies within ±2% of Optimum Moisture Content. Compaction moisture contents dry of optimum are recommended.
- When compacting wall fill within 1m from the facing, a hand operated vibratory compactor is required.
- Selection and Installation of Chimney Drain or Drain mattress should be done as per site condition under the supervision of site engineer.

### NOTE:

1. Prior to commencement of construction activities on each locations, the Contractor shall design the Geogrid reinforced earth wall considering the facing system, anchors, structural backfill material to be used and prepare working drawings showing detailed arrangements. After getting approvals for the design and working drawings from the consultant, the contractor shall commence the work.
2. This drawing is for cost estimation and information purpose only and the general design for cost estimation was done based on earth parameters.
3. No additional payment will be made for an additional changes.
4. The design tension strength of the Geogrid are as shown in the Table below.

| CLASSIFICATION | TYPE-A | TYPE-B | TYPE-C |
|---|---|---|---|
| TESIL STRENGTH (kN/m) | 59.00 | 89.00 | 119.00 |
| CLASSIFICATION | TYPE-D | TYPE-E | |
| TESIL STRENGTH (kN/m) | 192.00 | 256.00 | |

5. The minimum ultimate bearing capacity of the foundation ground shall be more than mentioned below for the different height condition.

| Height (m) | Itimate Bearing Capacity (kN/m2) |
|---|---|
| 10 m | 600 |
| 15 m | 900 |
| 20 m | 1200 |
| 25 m | 1500 |
| 27 m | 1600 |

6. For Geogrid: The minimum overlap of 10cm shall be provided between two adjacent roll of Geogrid.
7. When spring water is observed in the slope, the appropriate treatment shall be done as instructed by the engineer In-charge
8. The Leveling Pad at the toe of wall should be of M15 mix design concrete, with constant thickness of 0.5m and varying width as shown:

| Wall Height H (m) | Concrete Pad width (w) |
|---|---|
| *H=8 to 10* | *2.5 m* |
| *H=11 to 20* | *3.0 m* |
| *H=21 to 27* | *4.5 m* |

9. For the Embedment depth (Dm)
   - The Embedment depth refer here is the depth from ground surface to the toe of the wall excluding the 0.5m concrete footing at the base.
   - The minimum Embedment Depth (*min. Dm*) should not be less than or e ual to 0.5m.
   - The minimum embedment for soil should not be less than that given in table below based on the slope angle and Depth of the wall.

| Slope of the ground at toe (β) | Minimum embedment Depth (*min. Dm*) |
|---|---|
| *β= 0°* | *H/20* |
| *β= 18°* | *H/10* |
| *β= 27°* | *H/7* |
| *β= 34°* | *H/5* |

| EMPLOYER | PROJECT | DESIGN CONSULTANT | | | | | | |
|---|---|---|---|---|---|---|---|---|
| Government of Nepal<br>Ministry of Physical Infrastructure and Transport<br>**Department of Roads**<br>**Development Cooperation Implementation Division** | Nepal India Regional Trade and Transport Project (NIRTTP)<br>(IDA CREDIT No. 5273 - NEP)<br>Detailed Design for Improvement of (Nagdhunga) -Naubise - Mugling Road and Bridges | Intercontinental Consultants & Technocrats Pvt. Ltd.<br>A-8, Green Park, New Delhi - 110016<br>Ph : 4086-3000, Fax 2685-5252<br>In Joint Venture With<br>Soosung Engineering Co. Ltd., South Korea | In Association With<br>Full Bright Consultancy (Pvt.) Ltd.<br>316,Baburam Acharya Sadak<br>Sinamangal, Kathmandu, GPO Box: 4970, Kathmandu, Nepal | Designed By | SB | | **DRAWING NAME:**<br>TYPICAL GEOGRID DETAILS (FOR SOIL) | **Scale:**<br>0 2.5 5 | **Date:**<br>August 2019<br>**Drawing No.:**<br>NNMR-TYP 09-02 |
| | | | | Checked By | PMS | | | |
| | | | | Approved By | BNS | | | |

## For H□21-30m

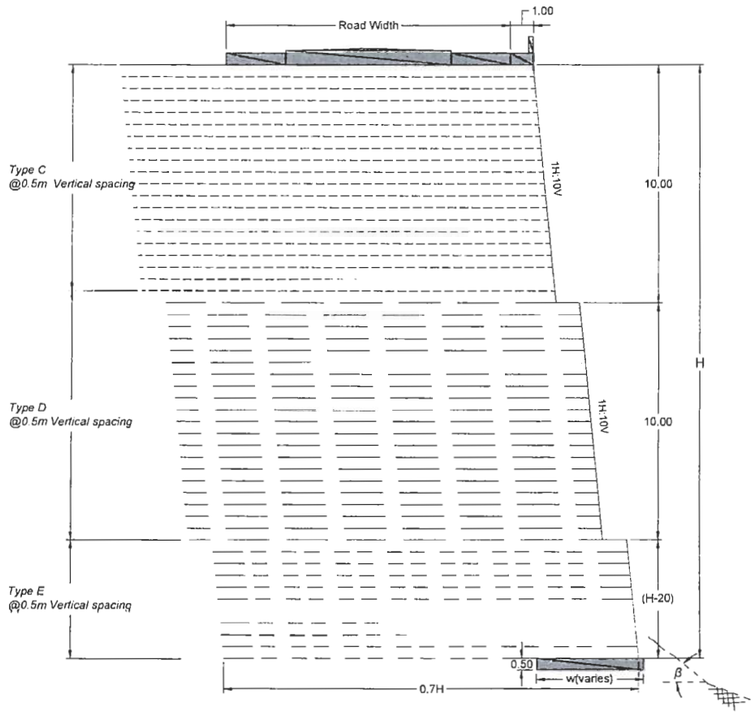


Notes for structural backfill:

- The structural backfill material should be of good quality free draining granular material and, should be free of organic matter and deleterious substance.
- The maximum particle size should not exceed 75mm and percentage of fines passing 75 micron sieve should not be greater than 15%.
- The plasticity index should be less than 6%. Soil containing mica, gypsum, smectite, montomorrilonite which are soft durable are not recommended.
- Similarly, recycled asphalt and recycled concrete are not recommended to use for structural backfill.
- It should be compacted on a layer of 30cm with minimum of 95% maximum density that lies within ±2% of Optimum Moisture Content. Compaction moisture contents dry of optimum are recommended.
- When compacting wall fill within 1m from the facing, a hand operated vibratory compactor is required.
- Selection and Installation of Chimney Drain or Drain mattress should be done as per site condition under the supervision of site engineer.

NOTE:

1. Prior to commencement of construction activities on each locations, the Contractor shall design the Geogrid reinforced earth wall considering the facing system, anchors, structural backfill material to be used and prepare working drawings showing detailed arrangements. After getting approvals for the design and working drawings from the consultant, the contractor shall commence the work.
2. This drawing is for cost estimation and information purpose only and the general design for cost estimation was done based on earth parameters.
3. No additional payment will be made for an additional changes.
4. The design tension strength of the Geogrid are as shown in the Table below.

| CLASSIFICATION | TYPE-A | TYPE-B | TYPE-C |
|---|---|---|---|
| TESIL STRENGTH (kN/m) | 59.00 | 89.00 | 119.00 |
| CLASSIFICATION | TYPE-D | TYPE-E | |
| TESIL STRENGTH (kN/m) | 192.00 | 256.00 | |

5. The minimum ultimate bearing capacity of the foundation ground shall be more than mentioned below for the different height condition.

| Height (m) | Ultimate Bearing Capacity (kN/m2) |
|---|---|
| 10 m | 600 |
| 15 m | 900 |
| 20 m | 1200 |
| 25 m | 1500 |
| 27 m | 1600 |

6. For Geogrid: The minimum overlap of 10cm shall be provided between two adjacent roll of Geogrid.
7. When spring water is observed in the slope, the appropriate treatment shall be done as instructed by the engineer In-charge.
8. The Leveling Pad at the toe of wall should be of M15 mix design concrete, with constant thickness of 0.5m and varying width as shown.

| Wall Height H (m) | Concrete Pad width (*w*) |
|---|---|
| *H=8 to 10* | *2.5 m* |
| *H=11 to 20* | *3.0 m* |
| *H=21 to 27* | *4.5 m* |

9. For the Embedment depth (Dm)
   - The Embedment depth refer here is the depth from ground surface to the toe of the wall excluding the 0.5m concrete footing at the base.
   - The minimum Embedment Depth (*min. Dm*) should not be less than or e ual to 0.5m.
   - The minimum embedment for soil should not be less than that given in table below based on the slope angle and Depth of the wall.

| Slope of the ground at toe (β) | Minimum embedment Depth (*min. Dm*) |
|---|---|
| *β*= 0° | *H/20* |
| *β*= 18° | *H/10* |
| *β*= 27° | *H/7* |
| *β*= 34° | *H/5* |

| EMPLOYER | PROJECT | DESIGN CONSULTANT | | | | | |
|---|---|---|---|---|---|---|---|
| Government of Nepal<br>Ministry of Physical Infrastructure and Transport<br>**Department of Roads**<br>**Development Cooperation Implementation Division** | Nepal India Regional Trade and Transport Project<br>(NIRTTP)<br>(IDA CREDIT No. 5273 - NEP)<br>Detailed Design for Improvement of<br>(Nagdhunga) -Naubise - Mugling Road and Bridges | Intercontinental Consultants & Technocrats Pvt. Ltd.<br>A-8, Green Park, New Delhi - 110016<br>Ph : 4086-3000, Fax 2685-5252<br>In Joint Venture With<br>Soosung Engineering Co. Ltd., South Korea | In Association With<br>Full Bright Consultancy (Pvt.) Ltd.,<br>316,Baburam Acharya Sadak<br>Sinamangal, Kathmandu, GPO<br>Box: 4970, Kathmandu, Nepal | Designed By | SB | **DRAWING NAME:**<br>TYPICAL GEOGRID DETAILS<br>(FOR SOIL) | **Scale:**<br>0 2.5 5 |
| | | | | Checked By | PMS | | **Date:**<br>August 2019 |
| | | | | Approved By | BNS | | **Drawing No.:**<br>NNMR-TYP 09-03 |

For H□16-20m

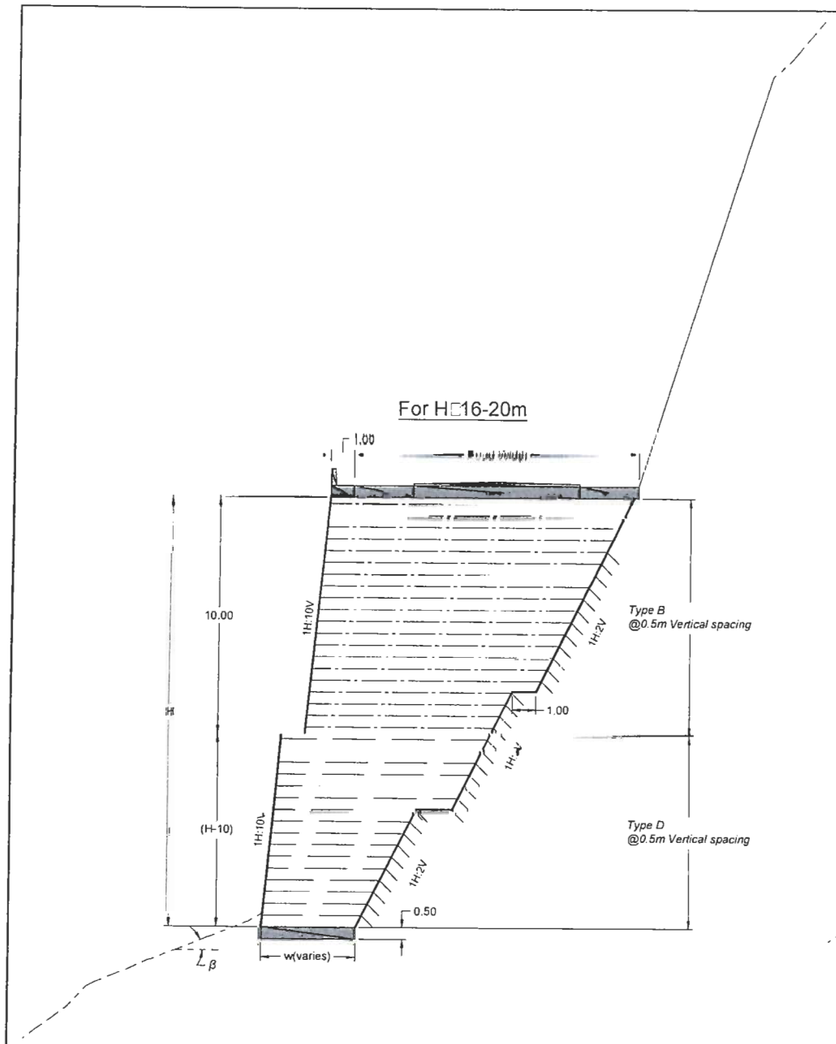


For H□11-15m

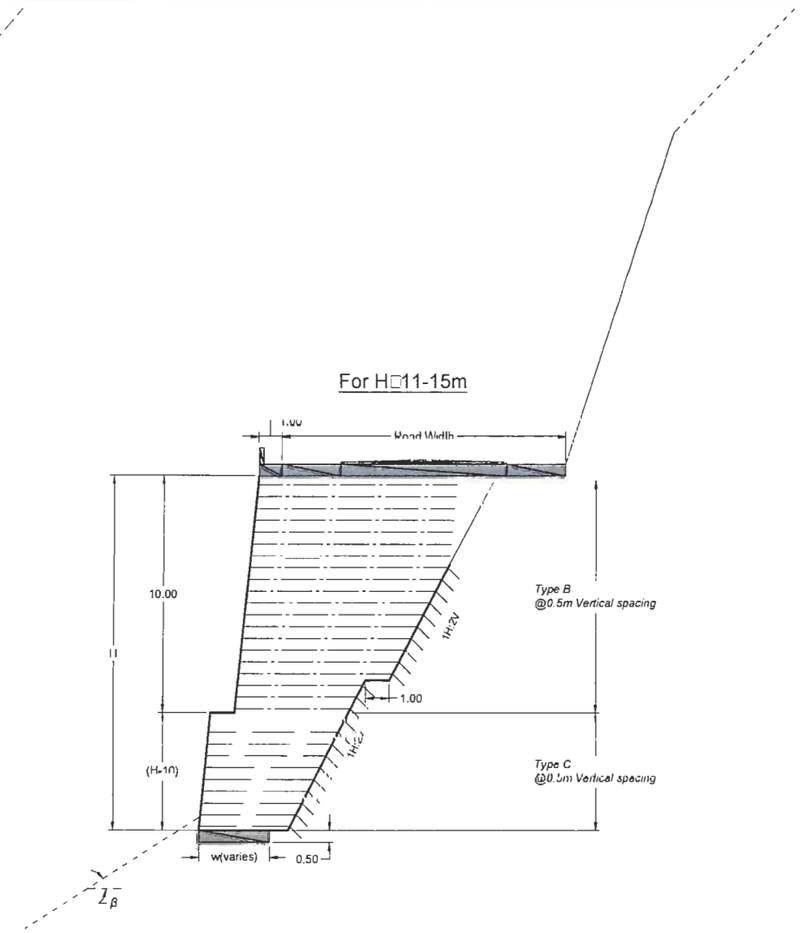


NOTE:

1. Prior to commencement of construction activities on each locations, the Contractor shall design the Geogrid reinforced earth wall considering the facing system, anchors, structural backfill material to be used and prepare working drawings showing detailed arrangements. After getting approvals for the design and working drawings from the consultant, the contractor shall commence the work.
2. This drawing is for cost estimation and information purpose only and the general design for cost estimation was done based on earth parameters.
3. No additional payment will be made for an additional changes.
4. The design tension strength of the Geogrid are as shown in the Table below.

| CLASSIFICATION | TYPE-A | TYPE-B | TYPE-C |
|---|---|---|---|
| TESIL STRENGTH (kN/m) | 59.00 | 89.00 | 119.00 |
| CLASSIFICATION | TYPE-D | TYPE-E | |
| TESIL STRENGTH (kN/m) | 192.00 | 256.00 | |

5. The minimum ultimate bearing capacity of the foundation ground shall be more than mentioned below for the different height condition

| Height (m) | Ultimate Bearing Capacity (kN/m?) |
|---|---|
| 10 m | 600 |
| 15 m | 900 |
| 20 m | 1200 |
| 25 m | 1500 |
| 27 m | 1600 |

6. For Geogrid: The minimum overlap of 10cm shall be provided between two adjacent roll of Geogrid.
7. When spring water is observed in the slope, the appropriate treatment shall be done as instructed by the engineer In-charge.
8. The Leveling Pad at the toe of wall should be of M15 mix design concrete, with constant thickness of 0.5m and varying width as shown:

| Wall Height H (m) | Concrete Pad width (*w*) |
|---|---|
| *H=8 to 10* | *2.5 m* |
| *H=11 to 20* | *3.0 m* |
| *H=21 to 27* | *4.5 m* |

9. For the Embedment depth (Dm)
   - The Embedment depth refer here is the depth from ground surface to the toe of the wall excluding the 0.5m concrete footing at the base.
   - The minimum Embedment Depth (*min. Dm*) should not be less than or e ual to 0.5m.
   - The minimum embedment for soil should not be less than that given in table below based on the slope angle and Depth of the wall.

| Slope of the ground at toe ($\beta$) | Minimum embedment Depth (*min. Dm*) |
|---|---|
| $\beta$= 0° | *H/20* |
| $\beta$= 18° | *H/10* |
| $\beta$= 27° | *H/7* |
| $\beta$= 34° | *H/5* |

NOTE:

1. Rock anchors should have pull out capacity of not less than 100KN.
2. Pullout test should be conducted for rock anchors in all types of rocks. For anisotropic rock, the pullout test should be conducted in various orientation.
3. In each rock type, each orientation a sufficient number of tests should be conducted to determine the average bolt capacities.
4. For Anchor length (L), with constant Ø25mm in both Hard and Soft rock conditions, where vertical and hori□ontal spacing of 0.5m and 1m, should be varying length as per following on different height conditions :

| Height (m) | Length. L (m) | |
|---|---|---|
| | Weather/Soft Rock | Hard Rock |
| 8.0 | 1.25 | 0.5 |
| 9.0 | 1.25 | 0.5 |
| 10.0 | 1.5 | 0.75 |
| 11.0 | 1.5 | 0.75 |
| 12.0 | 1.75 | 0.75 |
| 13.0 | 1.75 | 0.75 |
| 14.0 | 2.0 | 0.75 |
| 15.0 | 2.0 | 0.75 |
| 16.0 | 2.25 | 0.75 |
| 17.0 | 2.25 | 1.0 |
| 18.0 | 2.5 | 1.0 |
| 19.0 | 2.5 | 1.0 |
| 20.0 | 2.5 | 1.0 |

Notes for structural backfill:

- The structural backfill material should be of good quality free draining granular material and, should be free of organic matter and deleterious substance.
- The maximum particle size should not exceed 75mm and percentage of fines passing 75 micron sieve should not be greater than 15%.
- The plasticity index should be less than 6%. Soil containing mica, gypsum, smectite, montomorrilonite which are soft durable are not recommended.
- Similarly, recycled asphalt and recycled concrete are not recommended to use for structural backfill.
- It should be compacted on a layer of 30cm with minimum of 95% maximum density that lies within ±2% of Optimum Moisture Content. Compaction moisture contents dry of optimum are recommended.
- When compacting wall fill within 1m from the facing, a hand operated vibratory compactor is required.
- Selection and Installation of Chimney Drain or Drain mattress should be done as per site condition under the supervision of site engineer.

| EMPLOYER | PROJECT | DESIGN CONSULTANT | | | | | |
|---|---|---|---|---|---|---|---|
| Government of Nepal<br>Ministry of Physical Infrastructure and Transport<br>**Department of Roads**<br>**Development Cooperation Implementation Division** | Nepal India Regional Trade and Transport Project<br>(NIRTTP)<br>(IDA CREDIT No. 5273 - NEP)<br>Detailed Design for Improvement of<br>(Nagdhunga) -Naubise - Mugling Road and Bridges | Intercontinental Consultants & Technocrats Pvt. Ltd.<br>A-8, Green Park, New Delhi - 110016<br>Ph : 4086-3000, Fax 2685-5252<br>In Joint Venture With<br>Soosung Engineering Co. Ltd., South Korea<br>FBC<br>In Association With<br>Full Bright Consultancy (Pvt.) Ltd.<br>316,Baburam Acharya Sadak<br>Sinamangal, Kathmandu, GPO<br>Box: 4970, Kathmandu, Nepal | Designed By | SB | | **DRAWING NAME:**<br>TYPICAL GEOGRID DETAILS<br>(FOR ROCK) | **Scale:**<br>0 2.5 5 | **Date:**<br>August 2019 |
| | | | Checked By | PMS | | | | **Drawing No.:**<br>NNMR-TYP 09-04 |
| | | | Approved By | BNS | | | | |

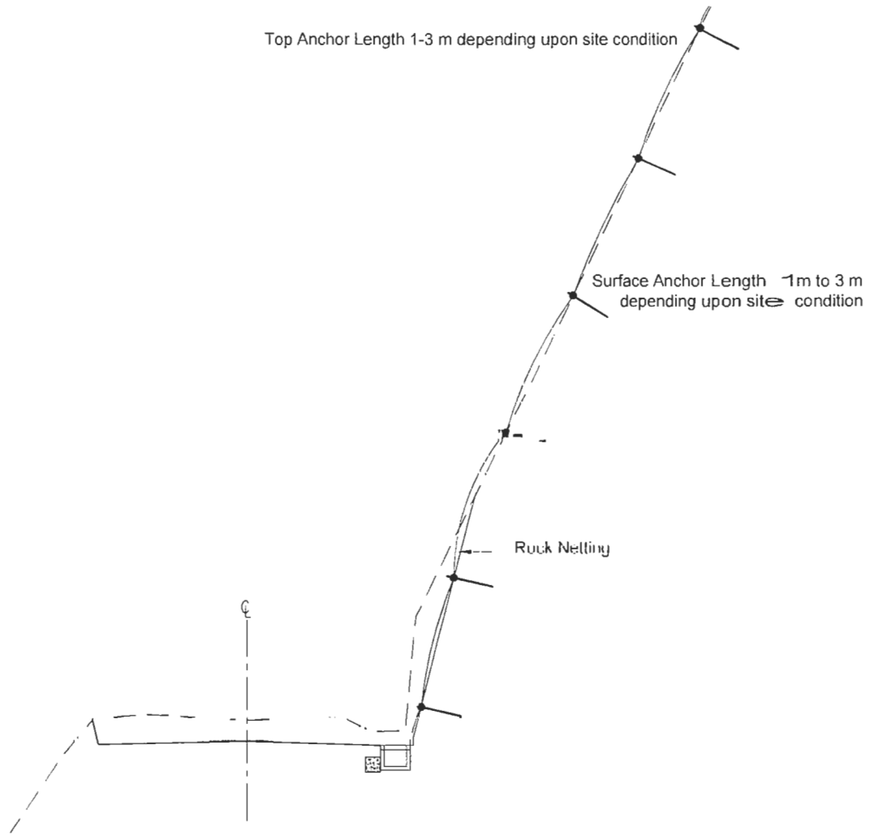


Section A-A

Scale : 1:200

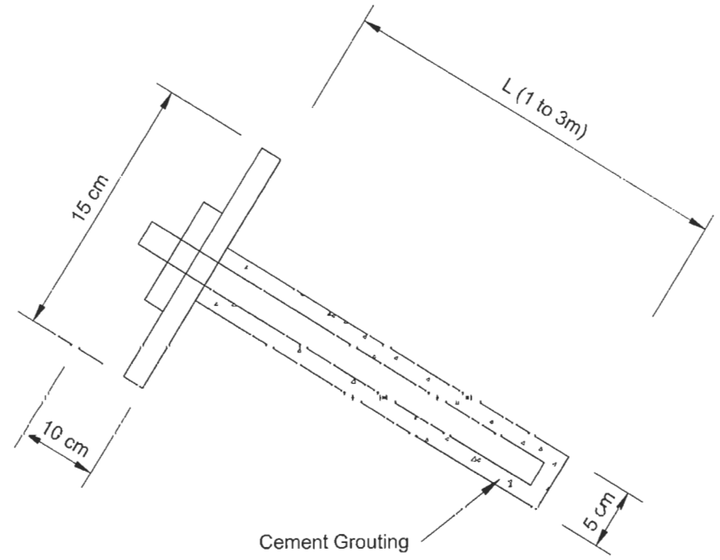


Detail of Bolt

(Not to Scale)

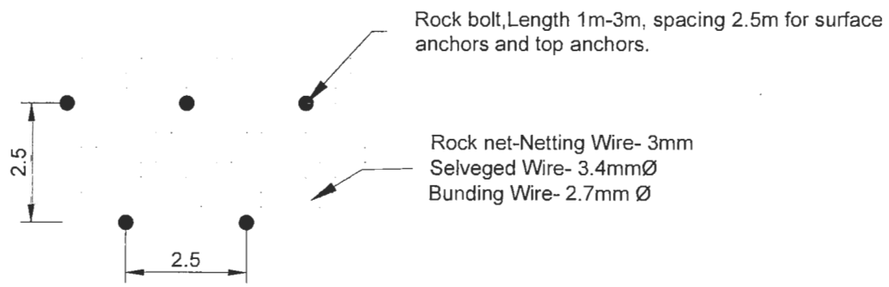


Details of Rock net and Rock bolt

(Not to Scale)

Notes:

1. Rock Net Details:
   a) Gabion Net anchored by 25mm dia Fe500 bars fully grouted
   b) Bolt length 1m to 3m depending upon site condition at top and in surface
   c) Bolt spacing 2.5m both ways
   d) Drapery system at lower part to release trapped debris
2. Netting Details:
   a) Netting wire 3.1mm dia
   b) Selvege wire 3.4mm dia
   c) Binding wire 2.7mm dia
3. Support Cable Details:
   a) Diameter 8mm
   b) Horizontal and vertical spacing 2.5m
   c) Minimum tensile strength of cable= 80KN/m, junction strength 20KN, pull- apart strength = 10KN

For more details refer to: special Report 23 -State of the art: Design and construction of rockfall mitigation systems

| EMPLOYER | PROJECT | DESIGN CONSULTANT | | | | DRAWING NAME: | Scale: | Date: |
|---|---|---|---|---|---|---|---|---|
| Government of Nepal<br>Ministry of Physical Infrastructure and Transport<br>**Department of Roads**<br>**Development Cooperation Implementation Division** | Nepal India Regional Trade and Transport Project (NIRTTP)<br>(IDA CREDIT No. 5273 - NEP)<br>Detailed Design for Improvement of Narayanghat - Mugling Road | Intercontinental Consultants & Technocrats Pvt. Ltd.<br>A-8, Green Park, New Delhi - 110016<br>Ph : 4086-3000, Fax 2685-5252<br>In Joint Venture With<br>Soosung Engineering Co. Ltd., South Korea<br>FBC<br>In Association With<br>Full Bright Consultancy (Pvt.) Ltd.<br>316,Baburam Acharya Sadak<br>Sinamangal, Kathmandu, GPO Box: 4970, Kathmandu, Nepal | Designed By | SB | | ROCK NETTING DETAILS | As Shown | August 2019 |
| | | | Checked By | PMS | | | | **Drawing No.:** NNMR-TYP 09-05 |
| | | | Approved By | BNS | | | | |

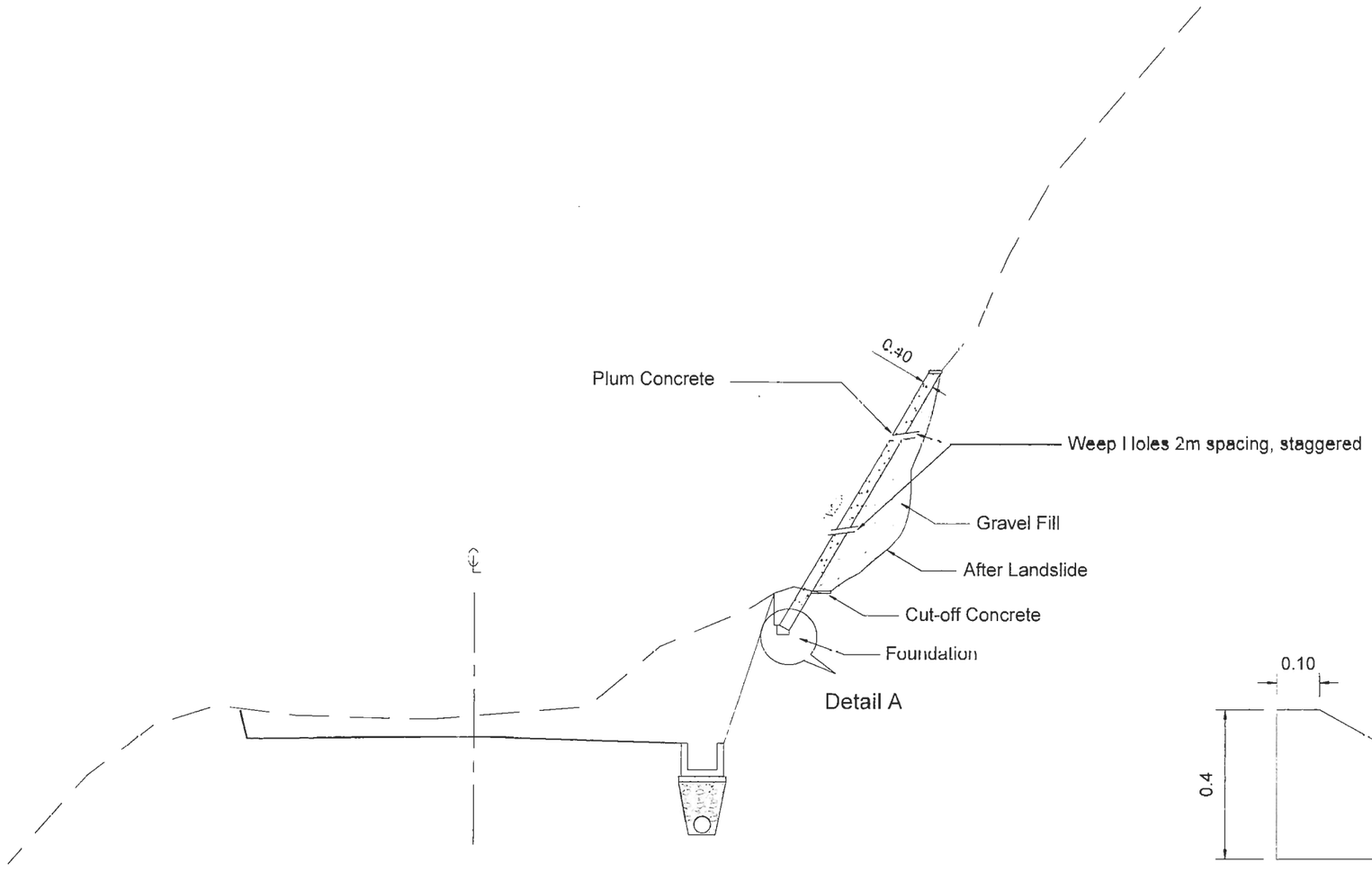


Prop Wall Structure

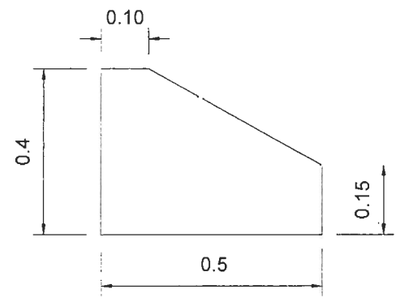


Detail A
Not to Scale

Notes

1. Work shall be executed as per site condition.

| EMPLOYER | PROJECT | DESIGN CONSULTANT | | | | | | |
|---|---|---|---|---|---|---|---|---|
| Government of Nepal<br>Ministry of Physical Infrastructure and Transport<br>**Department of Roads**<br>**Development Cooperation Implementation Division** | Nepal India Regional Trade and Transport Project (NIRTTP)<br>(IDA CREDIT No. 5273 - NEP)<br>Detailed Design for Improvement of Narayanghat - Mugling Road | Intercontinental Consultants & Technocrats Pvt. Ltd.<br>A-8, Green Park, New Delhi - 110016<br>Ph : 4086-3000, Fax 2685-5252<br>In Joint Venture With<br>Soosung Engineering Co. Ltd., South Korea | In Association With<br>Full Bright Consultancy (Pvt.) Ltd.<br>316,Baburam Acharya Sadak<br>Sinamangal, Kathmandu, GPO Box: 4970, Kathmandu, Nepal | Designed By | SB | | **DRAWING NAME:**<br>PROP WALL DETAILS | **Scale:**<br>As Shown | **Date:**<br>August 2019 |
| | | | | Checked By | PMS | | | | **Drawing No.:**<br>NNMR-TYP 09-06 |
| | | | | Approved By | BNS | | | | |

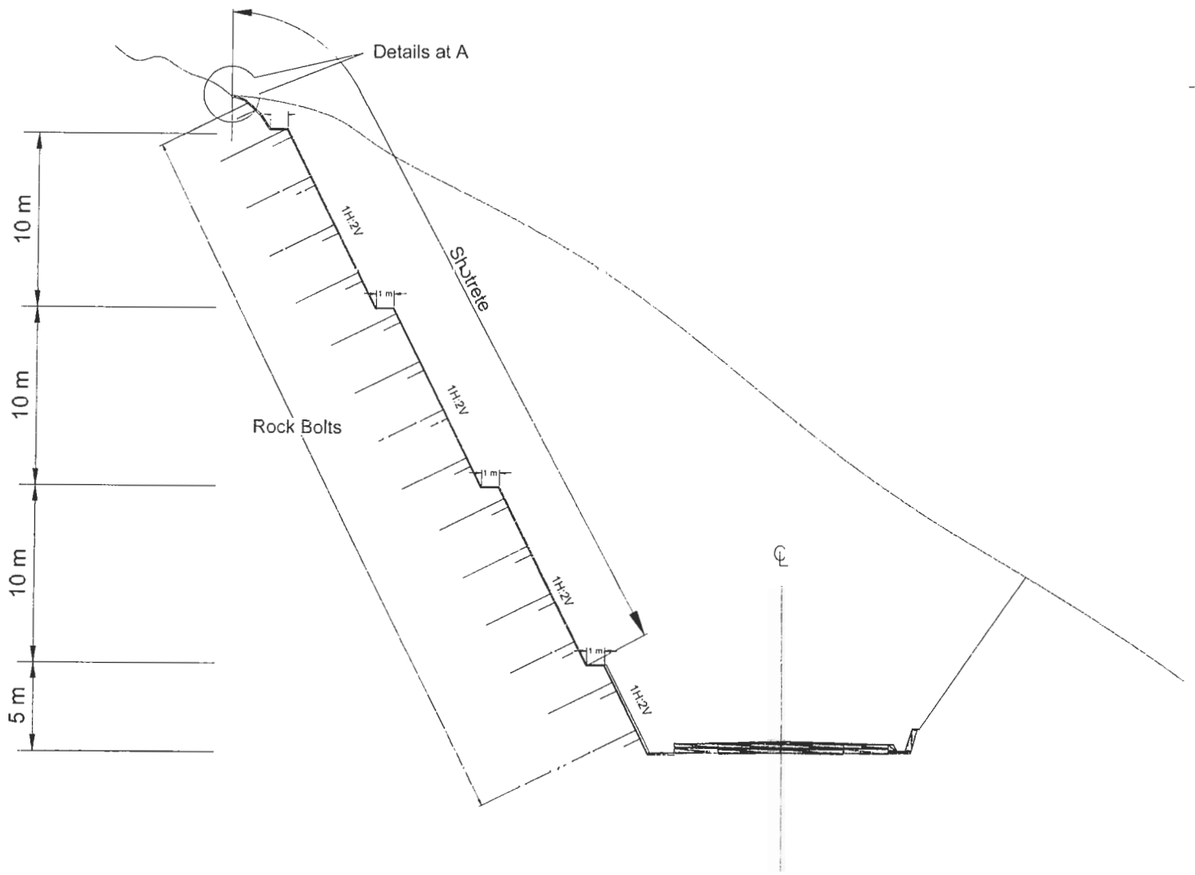


Typical Cross Section

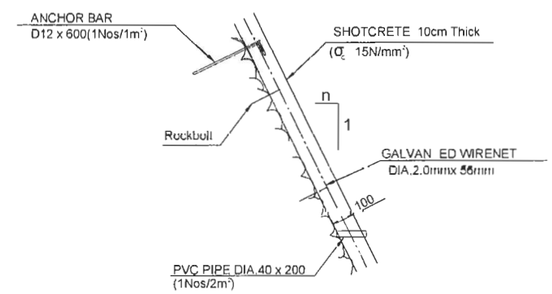


DETAIL OF SHOTCRETE

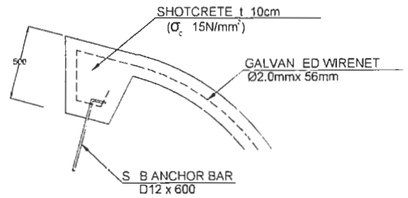


DETAIL OF "A"

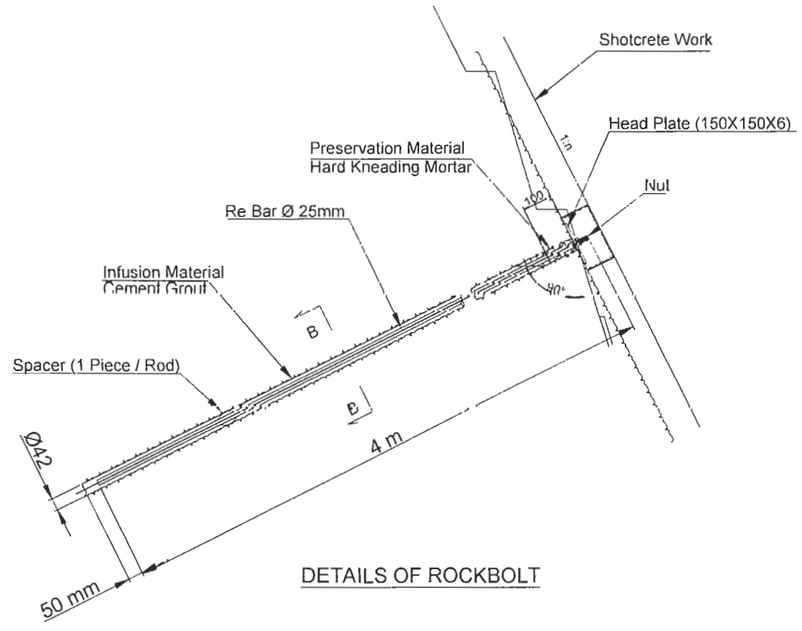


DETAILS OF ROCKBOLT

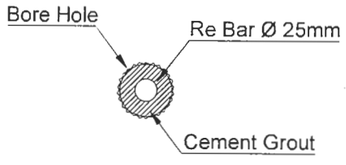


SECTION B-B

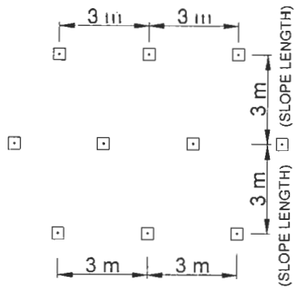


TYPICAL ARRANGEMENT OF

Notes:

Final work shall be executed as per site conditions.

| EMPLOYER | PROJECT | DESIGN CONSULTANT | | | | | | |
|---|---|---|---|---|---|---|---|---|
| Government of Nepal<br>Ministry of Physical Infrastructure and Transport<br>**Department of Roads**<br>**Development Cooperation Implementation Division** | Nepal India Regional Trade and Transport Project (NIRTTP)<br>(IDA CREDIT No. 5273 - NEP)<br>Detailed Design for Improvement of Narayanghat - Mugling Road | Intercontinental Consultants & Technocrats Pvt. Ltd.<br>A-8, Green Park, New Delhi - 110016<br>Ph : 4086-3000, Fax 2685-5252<br>In Joint Venture With<br>Soosung Engineering Co. Ltd., South Korea<br>FBC | In Association With<br>Full Bright Consultancy (Pvt.) Ltd.<br>316,Baburam Acharya Sadak<br>Sinamangal, Kathmandu, GPO Box: 4970, Kathmandu, Nepal | Designed By | SB | **DRAWING NAME:**<br>SHOTCRETE WITH WIREMESH AND ROCK BOLT | **Scale:**<br>As Shown | **Date:**<br>August 2019 |
| | | | | Checked By | PMS | | | **Drawing No.:**<br>NNMR-TYP 09-07 |
| | | | | Approved By | BNS | | | |

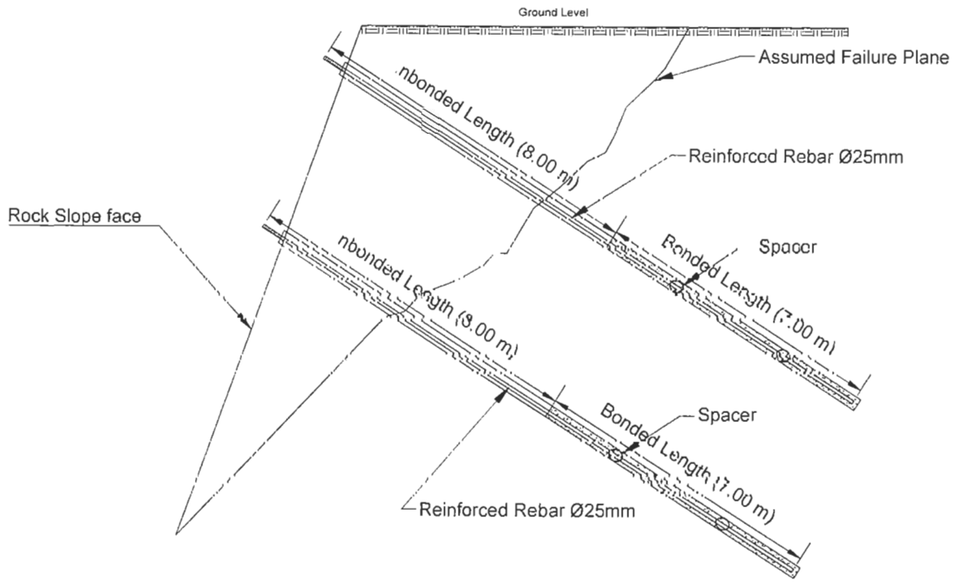


Typical Drawing for Rock Anchors to prevent Rock Wedge Movement

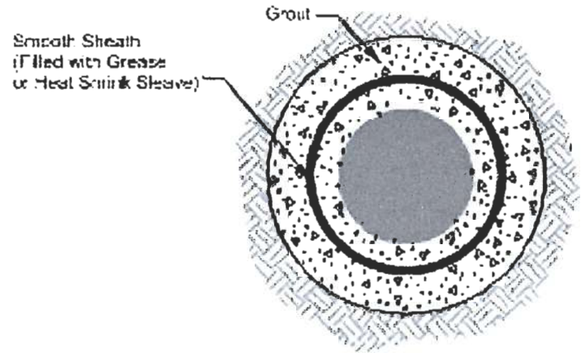


Section A

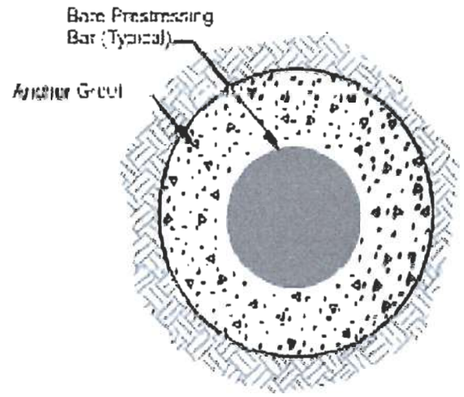


Section B

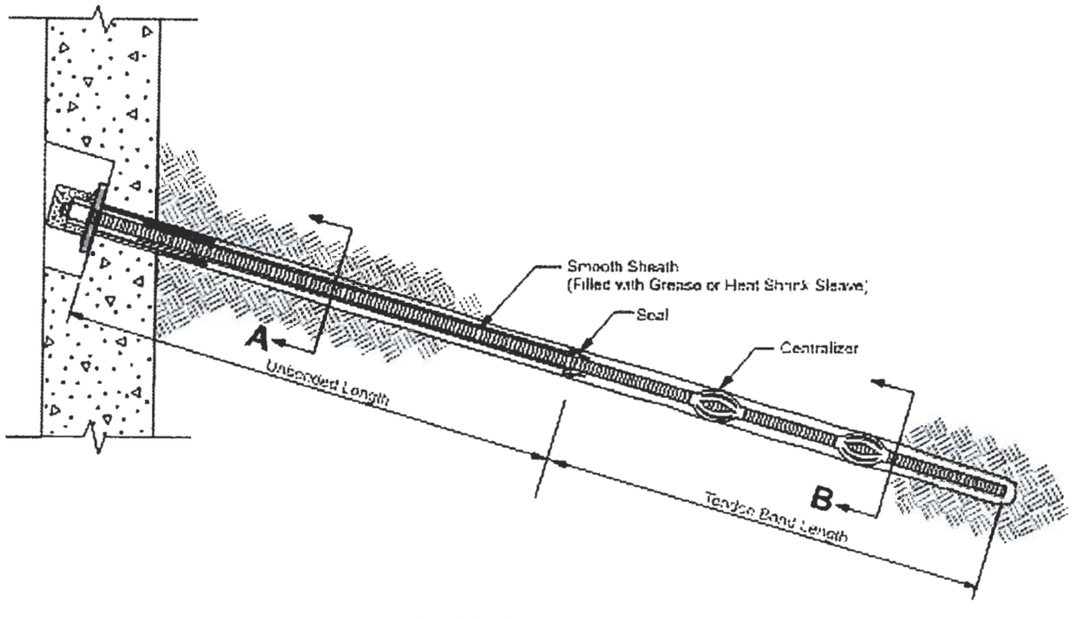


Rock Anchor

Notes:
Final work shall be executed as per site conditions.

| EMPLOYER | PROJECT | DESIGN CONSULTANT | | | | | | |
|---|---|---|---|---|---|---|---|---|
| Government of Nepal<br>Ministry of Physical Infrastructure and Transport<br>**Department of Roads**<br>**Development Cooperation Implementation Division** | Nepal India Regional Trade and Transport Project (NIRTTP)<br>(IDA CREDIT No. 5273 - NEP)<br>Detailed Design for Improvement of Narayanghat - Mugling Road | Intercontinental Consultants & Technocrats Pvt. Ltd.<br>A-8, Green Park, New Delhi - 110016<br>Ph : 4086-3000, Fax 2685-5252<br>In Joint Venture With<br>Soosung Engineering Co. Ltd., South Korea | In Association With<br>Full Bright Consultancy (Pvt.) Ltd.<br>316,Baburam Acharya Sadak<br>Sinamangal, Kathmandu, GPO Box: 4970, Kathmandu, Nepal | Designed By | SB | | **DRAWING NAME:** | **Scale:** | **Date:** |
| | | | | Checked By | PMS | | SLOPE MITIGATION MEASURE | As Shown | August 2019 |
| | | | | Approved By | BNS | | | | **Drawing No.:** NNMR-TYP 09-08 |

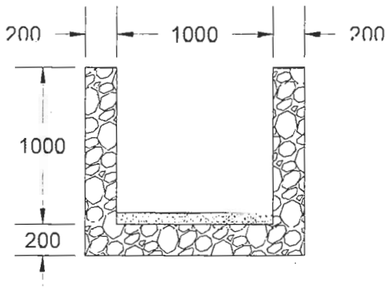


Front View

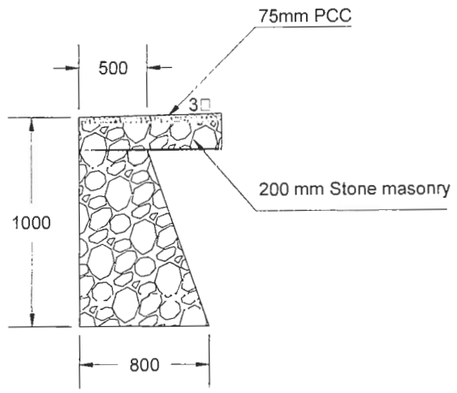


Details A

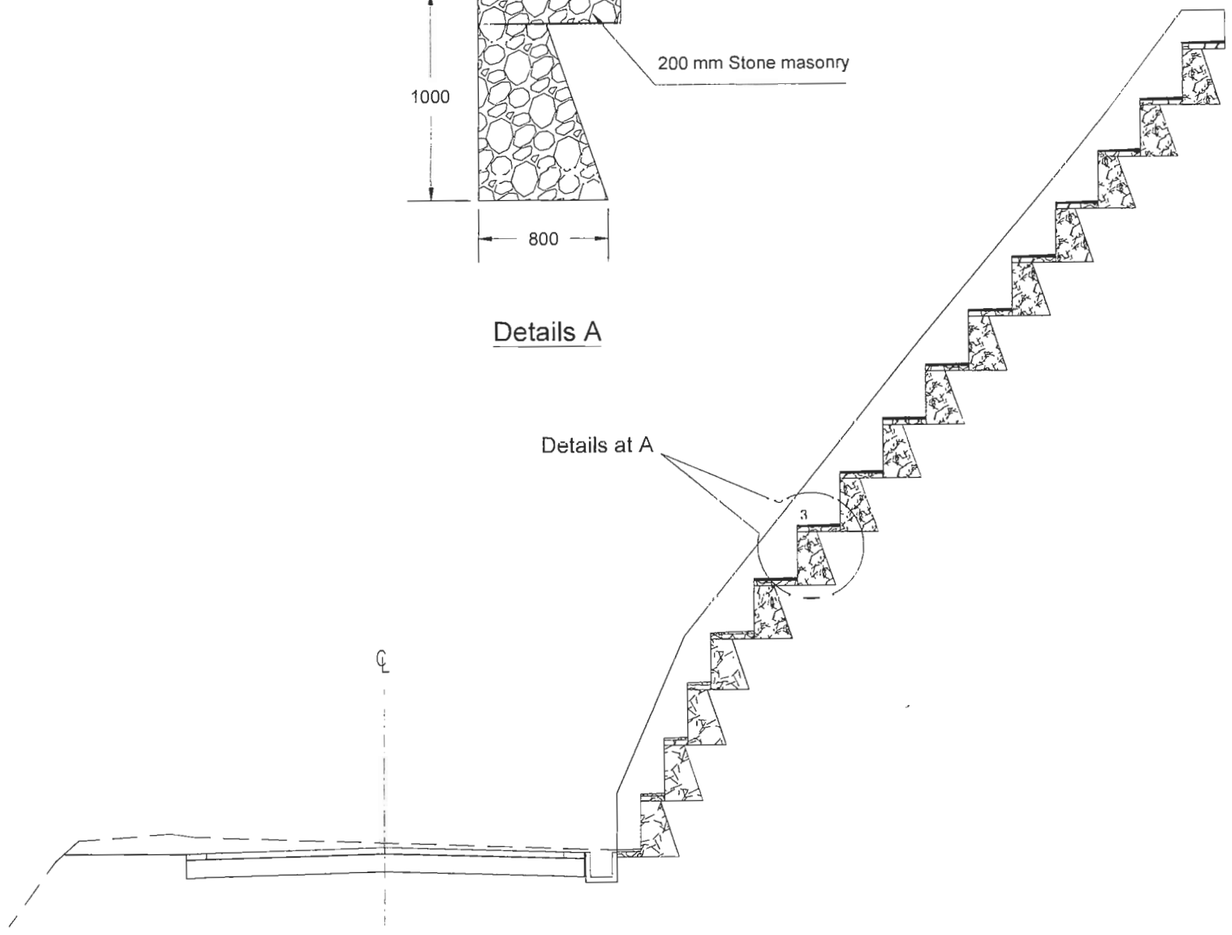


Stone Masonry Cascade Structure

Notes:

Final work shall be executed as per site conditions.

| EMPLOYER | PROJECT | DESIGN CONSULTANT | | | | DRAWING NAME: | Scale: | Date: |
|---|---|---|---|---|---|---|---|---|
| Government of Nepal<br>Ministry of Physical Infrastructure and Transport<br>**Department of Roads**<br>**Development Cooperation Implementation Division** | Nepal India Regional Trade and Transport Project (NIRTTP)<br>(IDA CREDIT No. 5273 - NEP)<br>Detailed Design for Improvement of Narayanghat - Mugling Road | Intercontinental Consultants & Technocrats Pvt. Ltd.<br>A-8, Green Park, New Delhi - 110016<br>Ph : 4086-3000, Fax 2685-5252<br>In Joint Venture With<br>Soosung Engineering Co. Ltd., South Korea | In Association With<br>Full Bright Consultancy (Pvt.) Ltd.<br>316,Baburam Acharya Sadak<br>Sinamangal, Kathmandu, GPO<br>Box: 4970, Kathmandu, Nepal | Designed By | SB | STONE MASONRY CASCADE DETAILS | As Shown | August 2019 |
| | | | | Checked By | PMS | | | **Drawing No.:** NNMR-TYP 09-09 |
| | | | | Approved By | BNS | | | |

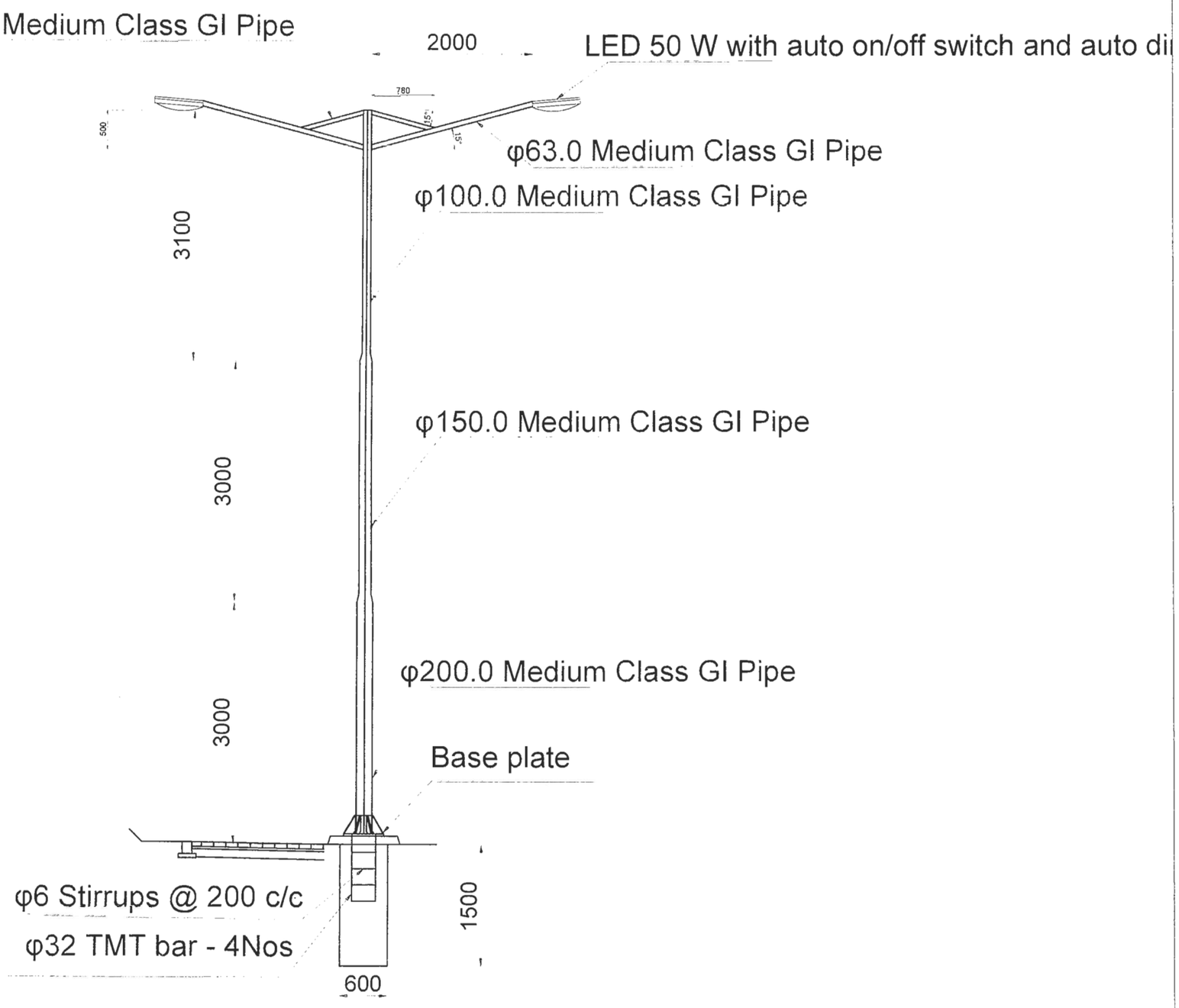


| EMPLOYER | PROJECT | DESIGN CONSULTANT | | | | | | |
|---|---|---|---|---|---|---|---|---|
| Government of Nepal<br>Ministry of Physical Infrastructure and Transport<br>**Department of Roads**<br>**Development Cooperation Implementation Division** | Nepal India Regional Trade and Transport Project (NIRTTP)<br>(IDA CREDIT No. 5273 - NEP)<br>Detailed Design for Improvement of Kathmandu (Nagdhunga) - Naubise - Mugling Road and Bridges | Intercontinental Consultants & Technocrats Pvt. Ltd.<br>A-8, Green Park, New Delhi - 110016<br>Ph : 4086-3000, Fax 2685-5252<br>In Joint Venture With<br>Soosung Engineering Co. Ltd., South Korea<br>In Association With<br>Full Bright Consultancy (Pvt.) Ltd.<br>316.Baburam Acharya Sadak<br>Sinamangal, Kathmandu. GPO Box: 4970, Kathmandu, Nepal | Designed By | SB | | **DRAWING NAME:**<br>TYPICAL DRAWINGS OF STREET LIGHT | **Scale:** | **Date:**<br>August 2019 |
| | | | Checked By | PMS | | | | **Drawing No.:**<br>NNMR-TYP 03-05 |
| | | | Approved By | BNS | | | | |

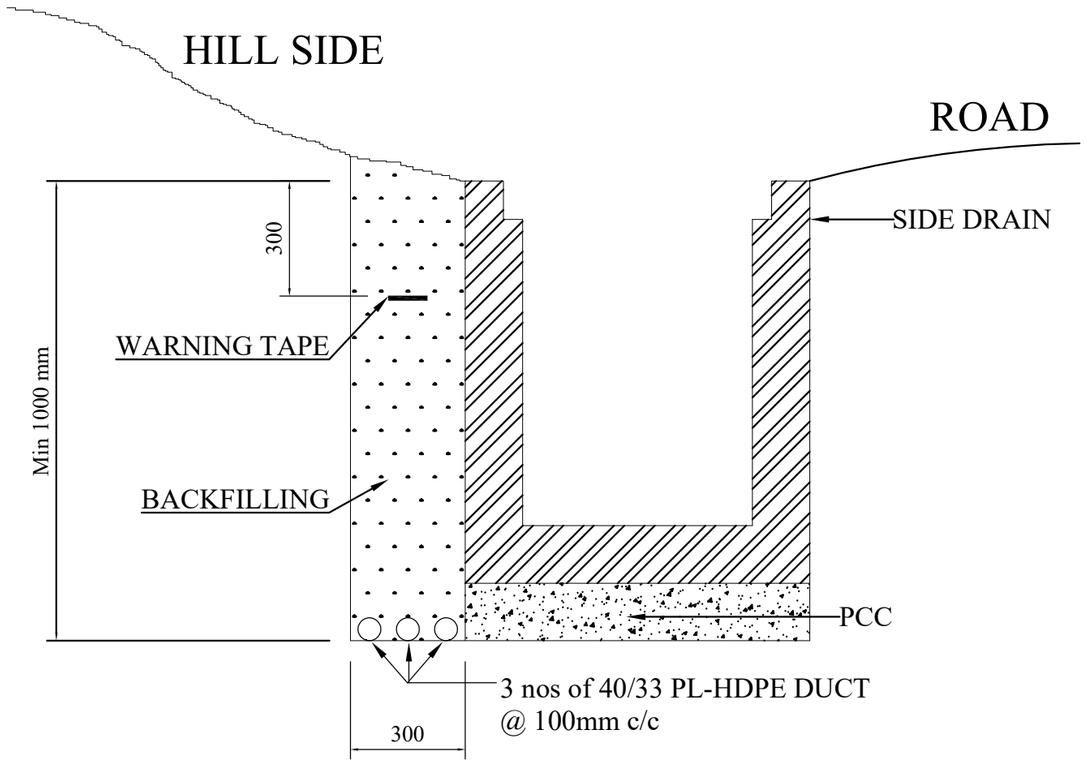


| EMPLOYER | PROJECT | DESIGN CONSULTANT | | | | DRAWING NAME: | Scale: | Date: |
|---|---|---|---|---|---|---|---|---|
| Government of Nepal<br>Ministry of Physical Infrastructure and Transport<br>**Department of Roads**<br>**Development Cooperation Implementation Division** | Strategic Road Connectivity and Trade Improvement Project<br>(SRCTIP)<br>(IDA CREDIT No. 6673 - NP)<br>Detailed Design for Improvement of Kathmandu (Nagdhunga) - Naubise - Mugling Road and Bridges | | | | | TYPICAL DRAWING OF LAYING OF PL-HDPE DUCT | NOT TO SCALE | SEPTEMBER 2021<br>**Drawing No.:**<br>NNMR-TYP-NTC-01 |

# Supplementary Information

Project Director

# PART 3 – Conditions of Contract and Contract Forms

Project Director

# Section VIII - General Conditions (GC)

**Red Book:**

© FIDIC 2017. All rights reserved.

The Conditions of Contract are the "General Conditions" which form part of the "Conditions of Contract for Construction for Building and Engineering Works Designed by the Employer ("Red book") Second edition 2017" published by the Federation Internationale Des Ingenieurs – Conseils (FIDIC) and the following "Particular Conditions" which comprise of the Bank's COPA and the amendments and additions to such General Conditions.

An original copy of the above FIDIC publication i.e. "*Conditions of Contract for Building and Engineering Works Designed by the Employer*" must be obtained from FIDIC.

**International Federation of Consulting Engineers (FIDIC)**

FIDIC Bookshop – Box- 311 – CH – 1215 Geneva 15 Switzerland

Fax: +41 22 799 49 054

Telephone: +41 22 799 49 01

E-mail: fidic@fidic.org

www.fidic.org

FIDIC code: ISBN13: 978-2-88432-084-9

Project Director

# Section IX - Particular Conditions of Contract

The following Particular Conditions shall supplement the General Conditions.. Whenever there is a conflict, the provisions herein shall prevail over those in the General Conditions..

Project Director

# Particular Conditions

## Part A – Contract Data

| Conditions | Sub-Clause | Data |
|---|---|---|
| Where the Contract allows for Cost Plus Profit, percentage profit to be added to the Cost | 1.1.20 | 5% |
| Employer's name and address | 1.1.31 | The Employer is:<br>Department of Roads,<br>Development Cooperation Implementation Division,<br>Strategic Road Connectivity and Trade Improvement Project<br>Jwagal, Lalitpur<br><br>Employer's Representative is:<br>Project In Charge (PIC),<br>Strategic Road Connectivity and Trade Improvement Project,<br>Nagdhunga - Naubise - Mugling Road |
| Engineer's name and address | 1.1.35 | To be named later |
| Bank's name | 1.1.89 | The World Bank |
| Borrower's name | 1.1.90 | Government of Nepal |
| Time for Completion | 1.1.84 | Phase 1- Improvement/Construction Works:<br>**24 month**<br>Phase 2- Performance Based Maintenance Works:<br>**60 month** (including Defects Notification Period for Phase 1). |
| Defects Notification Period | 1.1.27 | **For Phase 1: Improvement/Construction Works** - 365 days |

Project Director

| Conditions | Sub-Clause | Data |
|---|---|---|
| | | **For Phase 2: Performance Based Maintenance Works -** Not applicable |
| Sections | 1.1.73 | Not Applicable |
| Electronic transmission system | 1.3 (a) (ii) | E-mail can be used as electronic transmission for communication. The electronic transmission shall be deemed effective provided the original is hand delivered (against receipt) within a week. |
| Address of Employer for communications: | 1.3(d) | Department of Roads,<br>Development Cooperation Implementation Division,<br>Strategic Road Connectivity and Trade Improvement Project<br>Jwagal, Lalitpur<br>Email: dorfcb@dor.gov.np |
| Address of Engineer for communications: | 1.3(d) | to be notified later |
| Address of Contractor for communications: | 1.3(d) | to be notified later |
| Governing Law | 1.4 | Law of the Government of Nepal |
| Ruling language | 1.4 | English |
| Language for communications | 1.4 | English |
| Time for the Parties to sign a Contract Agreement | 1.6 | With in 35 days after receipt of letter of acceptance |
| Number of additional paper copies of Contractor's Documents | 1.8 | 2 (Two) |
| Total liability of the Contractor to the Employer under or in connection with the Contract | 1.15 | The Product of 1.15 times the Accepted Contract Amount |

Project Director

| Conditions | Sub-Clause | Data |
|---|---|---|
| Site | 1.1. 74 | Nagdhunga - Naubise Section of Tribhuvan Highway [KM 0+000 to KM 12+260] |
| Time for access to the Site | 2.1 | No later than the Commencement Date |
| Contractor's General Obligations | 4.1 | Add at the end of 2nd paragraph as:<br>"The Contractor shall prepare site-specific working/ shop drawings based on the standard design /drawings provided in the Contract or modified by the Engineer, whether of a temporary or permanent nature. These documents shall be submitted to the Engineer for Review and approval as per Sub Clause 4.4.1 [Preparation and Review]. |
| Performance Security | 4.2 | The Performance Security will be in the form of a *demand guarantee* in the amount(s) as specified below in the same currency (ies) of the Accepted Contract Amount:<br>The Contractor shall prepare two separate performance securities:<br>(i) One with the value of 7.5% of the Accepted Contract Amount having validity period up to the completion of Defect Notification Period of Phase 1 (Improvement /Construction Work) plus 28 days; and<br>(ii) Another with the value of 0.5% of the Accepted Contract Amount having validity period up to issue of the Performance Certificate of Phase 2 plus 28 days.<br>If the Performance Security is issued by a bank located outside Nepal, it shall be counter guaranteed by a commercial bank established in Nepal. |

Project Director

| Conditions | Sub-Clause | Data |
|---|---|---|
| Environmental and Social (ES) Performance Security | 4.2 | (i) Environmental and Social (ES) Performance Security will be in the form of a demand guarantee in the amount(s) of 2% of the Accepted Contract amount having validity period up to the completion of Defect Notification Period of Phase 1 (Improvement /Construction Work) plus 28 days. |
| Period for notification of errors in the items of reference | 4.7.2 (a) | 28 Days |
| Period of payment for temporary utilities | 4.19 | Not Applicable. The Employer shall not provide utilities for the Contractor's use. |
| Number of additional paper copies of progress reports | 4.20 | 5 (five) |
| Maximum allowable accumulated value of work subcontracted (as a percentage of the Accepted Contract Amount) | 5.1(a) | 25% |
| Normal working hours | 6.5 | Normal working hours shall be 8 hours a day. |
| Number of additional paper copies of program | 8.3 | 2 (Two) |
| Delay damages payable for each day of delay | 8.8 | **Phase 1: Improvement/Construction Work 0.05%** of the Accepted Contract Amount, less provisional sum, for DAAB.<br>**Phase 2: Performance Based Maintenance Works**<br>Provisions of Special Specifications apply for PBM for deductions on monthly payments for failing to fulfil the maintenance standards defined in the speciications. |
| Maximum amount of delay damages | 8.8 | 10% of the Accepted Contract Amount less provisional sum for DAAB. (For Phase 1: Improvement/Construction Work ) |

Project Director

| Conditions | Sub-Clause | Data |
|---|---|---|
| Method of measurement | 12.2 | In accordance with the Specifications and Bill of Quantities |
| Percentage profit | 12.3 | As stated under 1.1.20 above |
| Percentage rate to be applied to Provisional Sums for overhead charges and profit | 13.4 (b)(ii) | 5 % |
| Total advance payment | 14.2 | The Advance Payments shall be fifteen (15) percent of the initial contract price excluding provisional sums and VAT and shall be made in two installments. Ten percent (first installment) shall be paid to the contractor upon submission of unconditional Bank Guarantee for Advance payment. The rest five percent (second installment) shall be paid after the completion of mobilization of all required resources to the site as agreed in the Contract Document, after fulfilling contractual obligations including establishment of camp site, quality control laboratory, submission of work programme comprising schedules for the works, labor, equipment, material, cash flow, insurance policies, upon submission of unconditional Bank Guarantee for Advance payment issued from a commercial bank. The Advance Payment Guarantee that is issued by a foreign bank shall be counter guaranteed by a commercial bank established in Nepal. The advance payment guarantee shall be valid until the intended completion date of the Phase 1: Improvement/Construction Phase. |

Project Director

| Conditions | Sub-Clause | Data |
|---|---|---|
| Repayment of Advance payment | 14.2.3 | (a) deduction shall commence in the IPC in which the total of all certified interim payments (excluding the advance payment and deductions and relases of retention money) exceeds twenty percent (20%) of the portion of the Accepted Contract Amount payable in that currency less Provisional Sums and VAT.<br>(b) deductions shall be made at the amortisation rate of Twenty Five percent (25%) provided that the advance payment shall be completely repaid prior to the time when 80 percent (80%) of the Accepted Contract Amount less Provisional Sums and VAT has been certified for payment. |
| Period of payment | 14.3 | after the end of each month |
| Number of additional paper copies of Statements | 14.3(b) | 1 (one) |
| Percentage of retention | 14.3(iii) | **Phase 1: Improvement/Construction Works**<br>**Five percent (**5%) of Interim Payment Certificate<br>**Phase 2: Performance Based Maintenance Works** |
| Limit of Retention Money (as a percentage of Accepted Contract Amount) | 14.3(iii) | **Phase 1: Improvement/Construction Works**<br>**Five percent (**5%) of the Accepted Contract Amount<br>**Phase 2: Performance Based Maintenance Works**<br>Not Applicable |
| Plant and Materials | 14.5(b)(i) | Not Applicable |
| | 14.5(c)(i) | Not Applicable |

Project Director

| Conditions | Sub-Clause | Data |
|---|---|---|
| Minimum Amount of Interim Payment Certificates | 14.6.2 | **Phase 1: Improvement/Construction Work**<br>2 % of the Accepted Contract Amount.<br>**Phase 2: Performance Based Maintenance Works**<br>Not Applicable |
| Period of payment of Advance Payment to the Contractor | 14.7(a) | 28 days |
| Period for the Employer to make interim payments to the Contractor under Sub-Clause 14.6 (interim Payment) | 14.7b(i) | 56 days |
| Period for the Employer to make interim payments to the Contractor under Sub-Clause 14.13 (Final Payment) | 14.7b(ii) | 28 days |
| Period for the Employer to make final payment to the Contractor | 14.7(c) | 56 days |
| Financing charges for delayed payment (percentage points above the average bank short-term lending rate as referred to under sub-paragraph (a)) | 14.8 | 3 % per annum. |
| Number of additional paper copies of draft Final Statement | 14.11.1(b) | 2 (Two) |
| Forces of nature, the risks of which are allocated to the Contractor | 17.2(d) | Not Applicable |

Project Director

| Conditions | Sub-Clause | Data |
|---|---|---|
| Permitted deductible limits | 19.1 | insurance required for the Works: NPR 500,000.00 (Five hundred thousand)<br>insurance required for Goods: Not Applicable insurance required for liability for breach of<br>professional duty: Not Applicable<br>insurance required against liability for fitness for<br>purpose (if any is required): Not Applicable<br>insurance required for injury to persons and<br>damage to property: NPR 10,000.00 (Ten thousand)<br>insurance required for injury to employees: 10,000.00 (Ten thousand)<br>other insurances required by Laws and by local practice: -<br>_____ |
| Additional amount to be insured (as a percentage of the replacement value) | 19.2.1(b) | *15%* |
| List of Exceptional Risks which shall not be excluded from the insurance cover for the Works | 19.2.1(iv) | Earthquake |
| Extent of insurance required for Goods | 19.2.2 | N/A |
| Amount of insurance required for Goods | | |
| Amount of insurance required for liability for breach of professional duty | 19.2.3(a) | N/A |
| Insurance required against liability for fitness for purpose | 19.2.3(b) | N/A |
| Period of insurance required for liability for breach of professional duty | 19.2.3 | N/A |

Project Director

| Conditions | Sub-Clause | Data |
|---|---|---|
| Amount of insurance required for injury to persons and damage to property | 19.2.4 | The minimum amount of third party insurance shall be NRs 5 (Five) million per occurrence for the damages to the property, with no limit on the number of occurrences. The minimum amount of third party insurance for personal injury or death shall be NRs 2 (Two) million per person, with no limit on the number of occurrences |
| Other insurances required by Laws and by local practice (give details) | | N/A |
| Time for appointment of DAAB member (s) | 21.1 | Within 42 days from the date the Contract is signed by both Parties |
| The DAAB shall be comprised of | 21.1 | One sole Member |
| List of proposed members of DAAB | 21.1 | Proposed by Employer :<br>Shall be finalized within 42 days after the date of contract aggrement<br>Proposed by Contractor [*Attach CVs to the Contract*]<br>_____ |
| Appointment (if not agreed) to be made by | 21.2 | *"Executive Committee of FIDIC (International Federation of Consulting Engineers)* |
| Rules of arbitration | 21.6(a) | Sub-Clause 21.6(a) of PART B – Special Provisions *shall* apply. |
| | 21.6 (b) | Sub-Clause 21.6(b) of PART B – Specific Provisions ***shall*** apply. |
| Place of arbitration | 21.6(a) | *Indicated at the time of award of contract* |

Project Director

**Table: Summary of Sections (if any): None**

| Description of parts of the Works that shall be designated a Section for the purposes of the Contract (Sub-Clause 1.1.73) | Value: Percentage* of Accepted Contract Amount (Sub-Clause 14.9) | Time for Completion (Sub-Clause 1.1.84) | Delay Damages (Sub-Clause 8.8) |
|---|---|---|---|
| | | | |

*****These percentages shall also be applied to each half of the Retention Money under Sub-Clause 14.9

Project Director

## Part B – Special Provisions

| | |
|---|---|
| **Sub-Clause 1.1.6 Claim** | Immidiately after "execution" add ", construction and performance based maintenance" |
| **Sub-Clause 1.1.10 Contract** | "the Contractor's Proposal" is deleted. |
| **Sub-Clause 1.1.49 Laws** | The Sub-Clause is replaced with:<br>"**Laws**" means all national (or state) legislation, statutes, ordinances and other laws, and regulations and by-laws of any legally constituted public authority." |
| **Sub-Clause 1.1.74 Site** | The Sub-Clause is replaced with:<br>"**Site**" means the places where the Permanent Works are to be executed, including storage and working area, and to which Plant and Materials are to be delivered, and any other places specified in the Contract as forming part of the Site." |
| **Sub-Clause 1.1.77 Statement** | On the second line after "Payment Certificate under…", add "Sub-Clause 14.2.1 [Advance Payment Guarantee] (if applicable),". |
| **Sub-Clause 1.1.81 Tender** | "the Contractor's Proposal" is deleted. |
| **Sub-Clause 1.1.87** | Delete the sentence and insert the following:<br>"Works" mean the Permanent Works, The Temporary Works and Performance Based Maintenance Works. |

**Sub-Clause 1.1.89 to 1.1.94 are added after Sub-Clause 1.1.88**

| | |
|---|---|
| **Sub-Clause 1.1 89 Bank** | "**Bank**" means the financing institution (if any) named in the Contract Data. |
| **Sub-Clause 1.1.90 Borrower** | "**Borrower**" means the person (if any) named as the borrower in the Contract Data. |
| **Sub-Clause 1.1.91 ES** | "**ES**" means Environmental and Social (including Sexual Exploitation and Abuse (SEA), and Sexual Harassment (SH)). |
| **Sub-Clause 1.1.92** | "**Sexual Exploitation and Abuse" "(SEA)"** means the following: |

Project Director

**Sexual Exploitation and Abuse (SEA), and Sexual Harassment (SH)**

**Sexual Exploitation** is defined as any actual or attempted abuse of position of vulnerability, differential power or trust, for sexual purposes, including, but not limited to, profiting monetarily, socially or politically from the sexual exploitation of another.

**Sexual Abuse** is defined as the actual or threatened physical intrusion of a sexual nature, whether by force or under unequal or coercive conditions; and

**"Sexual Harassment" "(SH)"** is defined as unwelcome sexual advances, requests for sexual favors, and other verbal or physical conduct of a sexual nature by the Contractor's Personnel with other Contractor's or Employer's Personnel.

Sub-Clause 1.1.93
Construction Phase Works

"Construction Phase Works" means the Phase 1: Improvement/Construction Works to be executed by the Contractor.

Sub-Clause 1.1.94
Maintenance Phase Works

"Maintenance Phase Works" means the Phase 2: Performance Based Maintenance Works to be executed by the Contractor.

**Sub-Clause 1.2**

**Interpretation**

Sub-paragraph (a) is replaced with the following:

(a) "Words indicating one gender include all genders;
"he/she" is replaced with:" it";
"him/her" is replaced with "it";
"his" and "his/her" are replaced with: "its";
"himself/herself" are replaced with: "itself"."

Further, "and" is deleted from the end of sub-paragraph (i) and added at the end of sub-paragraph (j).

sub-paragraph (k) is added:

(k) "The word "tender" is synonymous with "bid" or "proposal", the word tenderer with "bidder" or "proposer" and the words "tender documents" with "request for bids documents" or "request for proposal documents", as applicable."

**Sub-Clause 1.5**

**Priority of Documents**

The following documents are added in the list of Priority Documents after (e):

"(f) the Particular Conditions Part C- Fraud and Corruption;

Project Director

(g) the Particular Conditions Part D- Environmental and Social (ES) Metrics for Progress Reports;
(h) Particular Conditions- Part E- Sexual Exploitation and Abuse (SEA) and/or Sexual Harassment Performance Declaration for Subcontractors;"

and the list renumbered accordingly.

**Sub-Clause 1.6**

**Contract Agreement**

The last paragraph is replaced with:

"If the Contractor comprises a JV, the authorised representative of the JV shall sign the Contract Agreement in accordance with sub –clauses 1.14 (Joint and Several Liability)."

**Sub-Clause 1.12**

**Confidentiality**

The following is added at the end of the second paragraph: "The Contractor shall be permitted to disclose information required to establish its qualifications to compete for other projects."

"or" at the end of (b) is deleted.

"or" at the end of (c) is added.

The following is then added as (d): "is being provided to the Bank ."

**Sub-Clause 1.17**

**Inspections & Audit by the Bank**

The following Sub-Clause is added after Sub-Clause 1.16:

"Pursuant to paragraph 2.2 e. of Particular Conditions - Part C- Fraud and Corruption, the Contractor shall permit and shall cause its agents (where declared or not), subcontractors, subconsultants, service providers, suppliers, and personnel, to permit, the Bank and/or persons appointed by the Bank to inspect the site and/or the accounts, records and other documents relating to the procurement process, selection and/or contract execution, and to have such accounts, records and other documents audited by auditors appointed by the Bank. The Contractor's and its Subcontractors' and subconsultants' attention is drawn to Sub-Clause 15.8 (Fraud and Corruption) which provides, inter alia, that acts intended to materially impede the exercise of the Bank's inspection and audit rights constitute a prohibited practice subject to contract termination (as well as to a determination of ineligibility pursuant to the Bank's prevailing sanctions procedures)."

**Sub-Clause 2.4**

**Employer's Financial Arrangements**

The first paragraph is replaced with:

"The Employer shall submit, before the Commencement Date, reasonable evidence that financial arrangements have been made for financing the Employer's obligations under the Contract."

Project Director

The following sub-paragraph is added at the end of Sub-Clause 2.4:

"In addition, if the Bank has notified to the Borrower that the Bank has suspended disbursements under its loan, which finances in whole or in part the execution of the Works, the Employer shall give notice of such suspension to the Contractor with detailed particulars, including the date of such notification, with a copy to the Engineer, within 7 days of the Borrower having received the suspension notification from the Bank. If alternative funds will be available in appropriate currencies to the Employer to continue making payments to the Contractor beyond a date 60 days after the date of Bank notification of the suspension, the Employer shall provide reasonable evidence in its notice of the extent to which such funds will be available."

**Sub-Clause 2.6**

**Employer-Supplied Materials and Employer's Equipment**

Not Applicable

**Sub-Clause 3.1**

**The Engineer**

The following is added at the end of the first sub-paragraph:

"The Engineer's staff shall include suitably qualified engineers and other professionals who are competent to carry out these duties."

**Sub-Clause 3.2**

**Engineer's Duties and Authority**

The Engineer shall obtain the consent in writing of the Employer before taking action under the following Sub-Clauses of these Conditions:

(a)Sub-Clause 5.1: Approving sub-contracting

(b) Sub-Clause 8.5: Extension of Time for Completion

(c) Sub-Clause 10.1: Taking Over the Works and Sections

(d) Sub-Clause 12.3: Fixing a new rate or price

(e) Sub-Clause 13.1: Right to vary - instructing a variation, except in an emergency situation as determined by the Engineer

(f) Sub-Clause 13.2 (Value Engineering): stating consent or otherwise to a value engineering proposal submitted by the Contractor in accordance with Sub-Clause 13.2.

Notwithstanding the obligation, as set out above, to obtain consent in writing, if, in the opinion of the Engineer, an emergency occurs affecting the safety of life or of the Works or of adjoining property, it may, without relieving the Contractor of any of his duties and responsibility under the Contract, instruct

Project Director

the Contractor to execute all such work or to do all such things as may, in the opinion of the Engineer, be necessary to abate or reduce the risk. The Contractor shall forthwith comply, despite the absence of consent of the Employer, with any such instruction of the Engineer. The Engineer shall determine an addition to the Contract Price, in respect of such instruction, and EOT if any, in accordance with Clause 13 and shall notify the Contractor accordingly, with a copy to the Employer.

**Sub-Clause 3.3**

**Engineer's Representative**

The following is added at the end of Sub-Clause 3.3:

"The Engineer shall obtain the consent of the Employer before appointing or replacing an Engineer's Representative."

**Sub-Clause 3.4**

**Delegation by the Engineer**

The following is added at the end of the second paragraph:

"If any assistants are not fluent in this language, the Engineer shall make competent interpreters available during all working hours, in a number sufficient for those assistants to properly perform their assigned duties and/or exercise their delegated authority."

**Sub-Clause 3.6**

**Replacement of the Engineer**

In the first paragraph, "42 days" is replaced with: "21 days";

In the third para, "shall" is replaced with: "should".

**Sub-Clause 4.1**

**Contractor's General Obligations**

The following is inserted after the paragraph "The Contractor shall provide the Plant (and spare parts, if any) …":

"All equipment, material, and services to be incorporated in or required for the Works shall have their origin in any eligible source country as defined by the Bank."

The following is inserted after the paragraph "The Contractor shall, whenever required by the Engineer...":

"The Contractor shall not carry out mobilization to Site (e.g. limited clearance for haul roads, site accesses and work site establishment, geotechnical investigations or investigations to select ancillary features such as quarries and borrow pits) unless the Engineer gives a Notice of No-objection to the Contractor, a Notice that shall not be unreasonably delayed, to the measures the Contractor proposes to manage the environmental and social risks and impacts, which at a minimum shall include applying the Management Strategies and Implementation Plans (MSIPs) and Code of Conduct for Contractor's Personnel submitted as part of the Bid and agreed as part of the Contract.

The Contractor shall submit, to the Engineer for Review any additional MSIPs as are necessary to manage the ES risks and

Project Director

impacts of ongoing Works (e.g. excavation, earth works, bridge and structure works, stream and road diversions, quarrying or extraction of materials, concrete batching and asphalt manufacture). These MSIPs collectively comprise the Contractor's Environmental and Social Management Plan (C-ESMP). The Contractor shall review the C-ESMP, periodically (but not less than every six (6) months), and update it as required to ensure that it contains measures appropriate to the Works. The updated C-ESMP shall be submitted to the Engineer for Review.

The C-ESMP shall be part of the Contractor's Documents. The procedures for Review of the C-ESMP and its updates shall be as described in Sub-Clause 4.4.1 *[Preparation and Review]."*

The following is added as (g); (g) and (h) of the Sub-Clause are then renumbered as (h) and (i) respectively.

(g) "if so stated in the Specification, the Contractor shall:
(i) design structural elements of the Works taking into account climate change considerations;
(ii) apply the concept of universal access (the concept of universal access means unimpeded access for people of all ages and abilities in different situations and under various circumstances;
(iii) consider the incremental risks of the public's potential exposure to operational accidents or natural hazards, including extreme weather events; and
(iv) any other requirement stated in the Specification."

The following is added at the end of the Sub-Clause:

"The Contractor shall provide relevant contract- related information, as the Employer and/or Engineer may reasonably request to conduct Stakeholder engagements. "Stakeholder" refers to individuals or groups who:

(i) are affected or likely to be affected by the Contract; and
(ii) may have an interest in the Contract.

The Contractor shall also directly participate in Stakeholder engagements, as the Employer and/or Engineer may reasonably request."

**Sub-Clause 4.2**

**Performance Security and ES Performance Security**

The first paragraph is replaced with:

"The Contractor shall obtain (at its cost) a Performance Security for proper performance and, if applicable, an Environmental and Social (ES) Performance Security for compliance with the Contractor's ES obligations, in the amounts stated in the Contract Data and denominated in the currency(ies) of the Contract or in a freely convertible currency acceptable to the Employer. If

Project Director

amounts are not stated in the Contract Data, this Sub-Clause shall not apply."

In the following Sub-Clauses of the General Conditions, the term "Performance Security" is replaced with: "Performance Security and, if applicable, an Environmental and Social (ES) Performance Security":

2.1- Right of Access to the Site;

14.2- Advance Payment;

14.6- Issue of IPC;

14.12- Discharge;

14.13- Issue of FPC;

14.14 Cessation of Employer's Liability;

15.2- Termination for Contractor's Default;

15.5- Termination for Employer's Convenience.

**Sub-Clause 4.2.1**

**Contractor's obligations**

The first paragraph is replaced with:

"The Contractor shall deliver the Performance Securities and, if applicable, an ES Performance Security to the Employer within 28 days after receiving the Letter of Acceptance and shall send a copy to the Engineer. The Performance Security shall be issued by a reputable bank or financial institution selected by the Contractor and shall be in the form annexed to the Particular Conditions, as stipulated by the Employer in the Contract Data, or in another form approved by the Employer. The ES Performance Security shall be issued by a reputable bank selected by the Contractor and shall be in the form annexed to the Particular Conditions, as stipulated by the Employer in the Contract Data, or in another form approved by the Employer."

Thereafter, throughout Sub-Clause 4.2 "Performance Security" is replaced with: "Performance Security and, if applicable, ES Performance Security."

In the second paragraph immidietly after "Certificate" add "for the

Phase 1: Improvement/Construction Work and

Phase 2: Performance Based Maintenance Works"

**Sub-Clause 4.2.2**

**Claims under the Performance Security**

The first paragraph is replaced in its entirety with: "The Employer shall not make a claim under the Performance Security, except for amounts for which the Employer is entitled under the Contract."

Project Director

**Sub-Clause 4.2.3**

**Return of Performance Security**

Replace sub-paragraph (a) with following:

"performance security of 6% and ES Performance Security of 1% of the Accepted Contract Amount within 28 days after the issue of the performance Certificate of Phase 1 and the contractor has complied with Sub-Clause 11.11 [Clearance of Site]; the remaining Performance Security of 3% of Accepted Contract Amount shall be released during PBM phase in the manner described below:

If the Contractor complies with the Operational Service Levels defined in Table 32.4 Pavement Roughness in Section 3200 of Part 2 Employers Requirements, the Performance Security may be reduced by one and half percent (1.5%) of the Accepted Contract Amount after the completion of 3rd year of Phase 2.

Performance Security of remaining one and half percent (1.5%) of the Accepted Contract Amount shall be returned within 28 days after the issue of the performance Certificate of Phase 2 and the contractor has complied with all obligations of the Contract including Sub-Clause 11.11 [Clearance of Site]; or"

**Sub-Clause 4.3**

**Contractor's Representative**

The following is added at the end of the last paragraph: "If any of these persons is not fluent in this language, the Contractor shall make competent interpreters available during all working hours in a number deemed sufficient by the Engineer."

**Sub-Clause 4.6**

**Co-operation**

On the second-last line of the first paragraph before "Contractor's", "of the" is added.

The following is added after the first paragraph:

"The Contractor shall also, as stated in the Specification or as instructed by the Engineer, cooperate with and allow appropriate opportunities for the Employer's Personnel to conduct any environmental and social assessment."

Add new text to this Sub-clause 4.6 at the end as follows:

"There may be other contractors working on the similar and/or adjacent road. The Contractor shall at all times allow the free passage of all traffic, including vehicles and equipment of other Contractors. The maintenance for the road or way shall be the responsibility of the Contractor."

**Sub-Clause 4.7**

**Setting out**

In the second bullet-point of sub-paragraph (b) of Sub-Clause 4.7.3:

Project Director

before "if the items of reference", the following is add: "when examining the items of reference within the period stated in sub-paragraph (a) of Sub-Clause 4.7.2,".

On the second and third lines, the following is deleted "and the contractor's Notice is given after the period stated in sub-paragraph (a) of Sub-Clause 4.7.2".

**Sub-Clause 4.8**

**Health and Safety Obligations**

The following are included after deleting "and" at the end of (f) and replacing "." with ";" at the end of (g):

"

(h) provide health and safety training of Contractor's Personnel as appropriate and maintain training records;

(i) actively engage the Contractor's Personnel in promoting understanding, and methods for, implementation of health and safety requirements, as well as in providing information to Contractor's Personnel, and provision of personal protective equipment without expense to the Contractor's Personnel;

(j) put in place workplace processes for Contractor's Personnel to report work situations that they believe are not safe or healthy, and to remove themselves from a work situation which they have reasonable justification to believe presents an imminent and serious danger to their life or health;

(k) Contractor's Personnel who remove themselves from such work situations shall not be required to return to work until necessary remedial action to correct the situation has been taken. Contractor's Personnel shall not be retaliated against or otherwise subject to reprisal or negative action for such reporting or removal;

(l) subject to Sub-Clause 4.6, collaborate with the entities and Personnel under paragraph (a) , (b) and (c) of Sub-Clause 4.6, in applying the health and safety requirements. This is without prejudice to the responsibility of the relevant entities for the health and safety of their own personnel; and

(m) establish and implement a system for regular (not less than six-monthly) review of health and safety performance and the working environment."

(n) Put in place preventive as well as response management measures following the Standard Operation Procedure (SOP) and Protocol issued by the competent authority and the Good International Industry Practice (GIIP) against the spread of COVID-19 and other communicable diseases among workers on site.

Project Director

The second and third paragraphs are replaced with the following:

"Subject to Sub-Clause 4.1, the Contractor shall submit to the Engineer for Review a health and safety manual which has been specifically prepared for the Works, the Site and other places (if any) where the Contractor intends to execute the Works. The procedures for Review of the health and safety manual and its updates shall be as described in Sub-Clause 4.4.1 *[Preparation and Review]*.

The health and safety manual shall be in addition to any other similar document required under applicable health and safety regulations and Laws.

The health and safety manual shall set out all the health and safety requirements under the Contract,

(a) which shall include at a minimum:

(i) the procedures to establish and maintain a safe working environment without risk to health at all workplaces, machinery, equipment and processes under the control of the Contractor, including control measures for chemical, physical and biological substances and agents;

(ii) details of the training to be provided, records to be kept;

(iii) the procedures for prevention, preparedness and response activities to be implemented in the case of an emergency event (i.e. an unanticipated incident, arising from both natural and man-made hazards, typically in the form of fire, explosions, leaks or spills, which may occur for a variety of different reasons including failure to implement operating procedures that are designed to prevent their occurrence, extreme weather or lack of early warning);

(iv) the measures to be taken to avoid or minimize the potential for community exposure to water-borne, water-based, water-related, and vector-borne diseases,

(v) the measures to be implemented to avoid or minimize the spread of communicable diseases (including transfer of Sexually Transmitted Diseases or Infections (STDs), such as HIV virus) including COVID-19 and non-communicable diseases associated with the execution of the Works, taking into

Project Director

consideration differentiated exposure to and higher sensitivity of vulnerable groups. This includes taking measures to avoid or minimize the transmission of communicable diseases that may be associated with the influx of temporary or permanent Contract-related labour, including COVID-19;

(vi) the policies and procedures on the management and quality of accommodation and welfare facilities if such accommodation and welfare facilities are provided by the Contractor in accordance with Sub-Clause 6.6; and

(b) any other requirements stated in the Specification.

The paragraph starting with: "In addition to the reporting requirement of…" is deleted and replaced with the addition to GC Sub-Clause 4.20 in Sub-Clause 4.20 of the Special Provisions.

**Sub-Clause 4.15**

**Access Route**

The following is added at the end of Sub-Clause 4.15:

"The Contractor shall take all necessary safety measures to avoid the occurrence of incidents and injuries to any third party, associated with the use of, if any, Contractor's Equipment on public roads or other public infrastructure.

The Contractor shall monitor road safety incidents and accidents to identify negative safety issues, and establish and implement necessary measures to resolve them."

**Sub-Clause 4.18**

**Protection of the Environment**

Sub-Clause 4.18 Protection of the Environment is replaced with:

"The Contractor shall take all necessary measures to:

(a) protect the environment (both on and off the Site); and
(b) limit damage and nuisance to people and property resulting from pollution, noise and other results of the Contractor's operations and/ or activities.

The Contractor shall ensure that emissions, surface discharges, effluent and any other pollutants from the Contractor's activities shall exceed neither the values indicated in the Specification, nor those prescribed by applicable Laws.

In the event of damage to the environment, property and/or nuisance to people, on or off Site as a result of the Contractor's operations, the Contractor shall agree with the Engineer the appropriate actions and time scale to remedy, as practicable, the damaged environment to its former condition. The Contractor

Project Director

shall implement such remedies at its cost to the satisfaction of the Engineer."

**Sub-Clause 4.20**

**Progress Reports**

Replace "4.20 (g) with: "the Environmental and Social (ES) metrics set out in Particular Conditions - Part D"

The following is added at the end of the Sub-Clause:

"The Contractor shall keep a Site Diary wherein full details of all work carried out each day shall be recorded. The Site Diary may be prepared in sections relating to different parts of the works being carried out in different locations. The Contractor shall submit daily 'Daily Site Report' of the preceding day to the Engineer in an approved format. The Daily Site Report shall also include the details of the following:

i. Atmospheric condition,

ii. Rainfall data,

iii. Description and location of work performed,

iv. Interruption of work due to any circumstances,

v. Working hours,

vi. Number and category of workers worked on the site,

vii. Type of Equipment and Number of hours equipment usage,

viii. Test carried out including results if available,

ix. Inspections carried out by the Engineer and/or Persons assigned by the Engineer,

x. Supplied materials,

xi. Notices and site instructions,

xii. Any non-compliances with environmental, health and safety requirements;

xiii. Any grievances received;and

xiv. Accidents.

"In addition to the reporting requirement of this sub-paragraph (g) of Sub-Clause 4.20 [*Progress Reports*] the Contractor shall inform the Engineer immediately of any allegation, incident or accident, which has or is likely to have a significant adverse effect on the environment, the affected communities, the public, Employer's Personnel or Contractor's Personnel. This includes, but is not limited to, any incident or accident causing fatality or serious injury; significant adverse effects or damage to private property; or any allegation of SEA and/or SH. In case of SEA

Project Director

and/or SH, while maintaining confidentiality as appropriate, the type of allegation (sexual exploitation, sexual abuse or sexual harassment), gender and age of the person who experienced the alleged incident should be included in the information.

The Contractor, upon becoming aware of the allegation, incident or accident, shall also immediately inform the Engineer of any such incident or accident on the Subcontractors' or suppliers' premises relating to the Works which has or is likely to have a significant adverse effect on the environment, the affected communities, the public, Employer's Personnel or Contractor's, its Subcontractors' and suppliers' personnel. The notification shall provide sufficient detail regarding such incidents or accidents. The Contractor shall provide full details of such incidents or accidents to the Engineer within the timeframe agreed with the Engineer.

The Contractor shall require its Subcontractors and suppliers (other than Subcontractors) to immediately notify the Contractor of any incidents or accidents referred to in this Subclause."

**Sub-Clause 4.21 Security of the Site**

Sub-Clause 4.21 Security of the Site is replaced with:

"**Sub-Clause 4.21 Security of the Site**

The Contractor shall be responsible for the security of the Site, and:

(a) for keeping unauthorised persons off the Site;
(b) authorised persons shall be limited to the Contractor's Personnel, the Employer's Personnel, and to any other personnel identified as authorised personnel (including the Employer's other contractors on the Site), by a Notice from the Employer or the Engineer to the Contractor.

Subject to Sub-Clause 4.1, the Contractor shall submit for the Engineer's No-objection a security management plan that sets out the security arrangements for the Site.

The Contractor shall (i) conduct appropriate background checks on any personnel retained to provide security; (ii) train the security personnel adequately (or determine that they are properly trained) in the use of force (and where applicable, firearms), and appropriate conduct towards Contractor's Personnel, Employer's Personnel and affected communities; and (iii) require the security personnel to act within the applicable Laws and any requirements set out in the Specification.

The Contractor shall not permit any use of force by security personnel in providing security except when used for preventive

Project Director

and defensive purposes in proportion to the nature and extent of the threat.

In making security arrangements, the Contractor shall also comply with any additional requirements stated in the Specification."

**Sub-Clause 4.22**

**Contractor's Operations on Site**

On the third line of the second paragraph before "4.17", "Sub-Clause" is added.

**Sub-Clause 4.23**

**Archaeological and Geological Findings**

The first paragraph is replaced with the following:

"All fossils, coins, articles of value or antiquity, structures, groups of structures, and other remains or items of geological, archaeological, paleontological, historical, architectural or religious interest found on the Site shall be placed under the care and custody of the Employer. The Contractor shall:

(c) take all reasonable precautions, including fencing-off the area or site of the finding, to avoid further disturbance and prevent Contractor's Personnel or other persons from removing or damaging any of these findings;
(d) train relevant Contractor's Personnel on appropriate actions to be taken in the event of such findings; and
(e) implement any other action consistent with the requirements of the Specification and relevant Laws."

**Sub-Clause 4.24**

**Suppliers (other than Subcontractors)**

**4.24.1 Forced Labour**

The Contractor shall take measures to require its suppliers (other than Subcontractors) not to employ or engage forced labour including trafficked persons as described in Sub-Clause 6.21. If forced labour/trafficking cases are identified, the Contractor shall take measures to require the suppliers to take appropriate steps to remedy them. Where the supplier does not remedy the situation, the Contractor shall within a reasonable period substitute the supplier with a supplier that is able to manage such risks.

**4.24.2 Child labour**

The Contractor shall take measures to require its suppliers (other than Subcontractors) not to employ or engage child labour as described in Sub-Clause 6.22. If child labour cases are identified, the Contractor shall take measures to require the suppliers to take appropriate steps to remedy them. Where the supplier does not remedy the situation, the Contractor shall within a reasonable period substitute the supplier with a supplier that is able to manage such risks.

Project Director

**4.24.3 Serious Safety Issues**

The Contractor, including its Subcontractors, shall comply with all applicable safety obligations, including as stated in Sub-Clauses 4.8, 5.1 and 6.7. The Contractor shall also take measures to require its suppliers (other than Subcontractors) to adopt procedures and mitigation measures adequate to address safety issues related to their personnel. If serious safety issues are identified, the Contractor shall take measures to require the suppliers to take appropriate steps to remedy them. Where the supplier does not remedy the situation, the Contractor shall within a reasonable period substitute the supplier with a supplier that is able to manage such risks.

**4.24.4 Obtaining natural resource materials in relation to supplier**

The Contractor shall obtain natural resource materials from suppliers that can demonstrate, through compliance with the applicable verification and/ or certification requirements, that obtaining such materials is not contributing to the risk of significant conversion or significant degradation of natural or critical habitats such as unsustainably harvested wood products, gravel or sand extraction from river beds or beaches.

If a supplier cannot continue to demonstrate that obtaining such materials is not contributing to the risk of significant conversion or significant degradation of natural or critical habitats, the Contractor shall within a reasonable period substitute the supplier with a supplier that is able to demonstrate that they are not significantly adversely impacting the habitats.

Add Sub-Clause 4.25, 4.26, 4.27 as below

**Sub-Clause 4.25**

**Code of Conduct**

The Contractor shall have a Code of Conduct for the Contractor's Personnel.

The Contractor shall take all necessary measures to ensure that each Contractor's Personnel is made aware of the Code of Conduct including specific behaviors including SEA/SH that are prohibited, and understands the consequences of engaging in such prohibited behaviors.

These measures include providing instructions and documentation that can be understood by the Contractor's Personnel and seeking to obtain that person's signature acknowledging receipt of such instructions and/or documentation, as appropriate.

Project Director

The Contractor shall also ensure that the Code of Conduct is visibly displayed in multiple locations on the Site and any other place where the Works will be carried out, as well as in areas outside the Site accessible to the local community and project affected people. The posted Code of Conduct shall be provided in languages comprehensible to Contractor's Personnel, Employer's Personnel and the local community.

The Contractor's Management Strategy and Implementation Plans shall include appropriate processes for the Contractor to verify compliance with these obligations.

**Sub-Clause 4.26**

**Quarries and Dumps**

The contractor shall develop site specific plan for operating quarry and spoil disposal area and shall get it approved from the Engineer prior to operation. The Contractor shall obtain approval from the Engineer of all material sources before extraction. All sources of materials used under the Contract shall require such approval regardless of whether the material is obtained directly by the Contractor or supplied indirectly by others. Any quarry operated as part of this Contract shall be maintained and at the end of the Contract left in a stable condition without steep slopes and be either refilled or drained and be landscaped by appropriate planting. Rock or gravel won from a river shall be removed over some distance so as to limit the depth of material removed at any one location and not to disrupt the river flow or damage or undermine river banks. The Contractor shall not deposit excavated material on land in Government or private ownership except where approved by the Engineer in writing or by leave in writing of the authority responsible for such land in Government ownership or of the owner or responsible representative of the owner of such land in private ownership and only then in those places and under such conditions as the authority, owner or responsible representative may prescribe. On mountain slopes no side deposition shall be approved regardless of ownership and where side tipping has been carried out inadvertently or otherwise the Contractor shall stabilize and replant such disturbed areas. This clause shall be read in conjunction with Sub-Clause 4.18 and with the Specifications. Nothing in this Clause shall serve in any way to reduce the responsibility of the Contractor to comply in full with all the requirements of the Specifications.

**Sub-Clause 4.27**

Project Director

**Compensation for Land Occupied or Used by Contractor**

No land shall be occupied or used by the Contractor without the full consent and agreement of affected persons or as otherwise agreed by the Engineer. In line with the Resettlement Action Plan (RAP) prepared for the NNM Road, the Contractor shall fully compensate the occupier or owner of any land used or occupied by the Contractor with such compensation in accordance with the WB Guidelines for relocation, resettlement or compensation and to the satisfaction of the affected person(s) or as agreed by the Engineer.

The Contractor shall reinstate all properties whether public or private which are damaged in consequence of the execution and maintenance of the Works to a condition specified and at least equal to that obtaining before his first entry on them. If, in the opinion of the Engineer, the Contractor shall have failed to take reasonable and prompt action to fulfill his obligations in the matter of reinstatement, the Engineer will inform the Contractor in writing of his opinion in which circumstances the Employer reserves the right to employ others to do the necessary work of reinstatement and to deduct the cost thereof from any money due or which shall become due from the Employer to the Contractor.

**Sub-Clause 5.1**

**Subcontractors**

The following is added at the beginning of the second paragraph.

"The Contractor shall require that its Subcontractors execute the Works in accordance with the Contract, including complying with the relevant ES requirements, the SEA/SH Prevention and Response Obligations and the obligations set out in Sub-Clause 4.25 above."

The following is added after the first sentence of the fourth paragraph: "The Contractor's submission to the Engineer shall also include the Subcontractor's declaration in accordance with the Particular Conditions- Part E- Sexual Exploitation and Abuse (SEA) and/or Sexual Harassment Performance Declaration for Subcontractors."

The following is added at the end of the last paragraph of Sub-Clause 5.1:

"All subcontracts relating to the Works shall include provisions which entitle the Employer to require the subcontract to be assigned to the Employer under sub-paragraph (a) of Sub-Clause 15.2.3 [*After Termination*].

Where practicable, the Contractor shall give fair and reasonable opportunity for contractors from the Country to be appointed as Subcontractors.

Project Director

In the event of approved subcontracting the Contractor shall ensure that the Subcontractor does not further sub-let his Subcontract. The Contractor shall be responsible for keeping a log showing following information of all Subcontractors engaged in the Works:

- Name and address of the Subcontractors
- Date of Subcontract
- Works included in the Subcontract
- Commencement of Subcontract
- Completion of Subcontract
- Value of Subcontract

Payment The Contractor shall include such records in the progress report as per Sub-clause 4.20."

**Sub-Clause 5.2.2**

**Objection to Nomination**

In sub-paragraph (a), on the first line before "Subcontractor", "nominated" is added.

In sub-paragraph (c):

"and" is deleted from the end of (i);

"." at the end of (ii) is replaced with: ", and".

The following is then added as (iii):

"(iii) be paid only if and when the Contractor has received from the Employer payments for sums due under the Subcontract referred to under Sub-Clause 5.2.3 [ *Payment to nominated Subcontractors*]."

**Sub-Clause 6.1**

**Engagement of Staff and Labour**

The following paragraphs are added at the end of the Sub-Clause:

"The Contractor shall provide the Contractor's Personnel information and documentation that are clear and understandable regarding their terms and conditions of employment. The information and documentation shall set out their rights under relevant labour Laws applicable to the Contractor's Personnel (which will include any applicable collective agreements), including their rights related to hours of work, wages, overtime, compensation and benefits, as well as those arising from any requirements in the Specification. The Contractor's Personnel shall be informed when any material changes to their terms or conditions of employment occur.

The Contractor is encouraged, to the extent practicable and reasonable, to employ staff and labour with appropriate qualifications and experience from sources within the Country."

**Sub-Clause 6.2**

The following paragraphs are added at the end of the Sub-Clause:

Project Director

**Rates of Wages and Conditions of Labour**

"The Contractor shall inform the Contractor's Personnel about:

(a) any deduction to their payment and the conditions of such deductions in accordance with the applicable Laws or as stated in the Specification; and

(b) their liability to pay personal income taxes in the Country in respect of such of their salaries, wages, allowances and any benefits as are subject to tax under the Laws of the Country for the time being in force.

The Contractor shall perform such duties in regard to such deductions thereof as may be imposed on him by such Laws.

Where required by applicable Laws or as stated in the Specification, the Contractor shall provide the Contractor's Personnel written notice of termination of employment and details of severance payments in a timely manner. The Contractor shall have paid the Contractor's Personnel (either directly or where appropriate for their benefit) all due wages and entitlements including, as applicable, social security benefits and pension contributions, on or before the end of their engagement/ employment.

The Contractor's scales of wages shall be such as to ensure that there is no differentiation between wages for men and women for work of equal value."

**Sub-Clause 6.5 Working Hours**

The following is inserted at the end of the Sub-Clause:

"The Contractor shall provide the Contractor's Personnel annual holiday and sick, maternity and family leave, as required by applicable Laws or as stated in the Specification."

**Sub-Clause 6.6**

**Facilities for Staff and Labour**

The following is added as the last paragraph:

"Save insofar as the Contract otherwise provides, the Contractor shall provide and maintain such accommodation and amenities as he may consider necessary for all his staff and labour, employed for the purposes of or in connection with the Contract, including all fencing, water supply (both for drinking and other purposes), electricity supply, sanitation, cookhouses, fire prevention and firefighting equipment and other requirements in connection with such accommodation or amenities, including safe hygiene facilities in line with COVID-19 guidelines. On completion of the Contract, unless otherwise agreed with the Employer, all the temporary camps/housing provided by the Contractor shall be removed and the site(s) reinstated to its (their) original condition, all to the approval of the Engineer. All accommodation facilities of whatsoever nature provided by the Contractor, whether for his own use or for the use of the Employer or Engineer shall be

Project Director

provided with adequate sewage and wastewater collection and treatment facilities to a design and of a capacity approved by the Engineer. Under no circumstances shall untreated sewage or wastewater be discharged to the natural environment.

The Contractor shall provide appropriate facilities for children and women (separate WASH facilities) at construction campsites.

If stated in the Specification, the Contractor shall give access to or provide services that accommodate the physical, social and cultural needs of the Contractor's Personnel. The Contractor shall also provide similar facilities for the Employer's Personnel as stated in the Specification."

**Sub-Clause 6.7**

**Health and Safety of Personnel**

In the second paragraph, "The Contractor" is replaced with:

"Except as otherwise stated in the Specification, the Contractor…"

The following paragraphs are added at the end of Sub-Clause:

"All accidents shall be reported to the local authorities and police in accordance with the requirements of local laws and regulations. Additionally the Contractor shall report to the Engineer details of any accident as soon as possible after its occurrence. In the case of any fatality or serious accident, the Contractor shall, in addition to the normal report, notify the Engineer immediately by the quickest available means.

The Contractor will provide adequate protective clothing and safety equipment as required for each group of workers, following the C-ESMP, ESMP and relevant regulations.

Safety training will also be given to skilled and unskilled labourers in all aspects of work."

**Sub-Clause 6.9**

**Contractor's Personnel**

The Sub-Clause is replaced with:

"The Contractor's Personnel (including Key Personnel, if any) shall be appropriately qualified, skilled, experienced and competent in their respective trades or occupations.

The Engineer may require the Contractor to remove (or cause to be removed) any person employed on the Site or Works, including the Contractor's Representative and Key Personnel (if any), who:

(a) persists in any misconduct or lack of care;
(b) carries out duties incompetently or negligently;
(c) fails to comply with any provision of the Contract;
(d) persists in any conduct which is prejudicial to safety, health, or the protection of the environment;

Project Director

(e) based on reasonable evidence, is determined to have engaged in Fraud and Corruption during the execution of the Works;
(f) has been recruited from the Employer's Personnel in breach of Sub-Clause 6.3 [Recruitment of Persons];
(g) undertakes behaviour which breaches the Code of Conduct including SEA/SH code for Contractor's Personnel (ES).

If appropriate, the Contractor shall then promptly appoint (or cause to be appointed) a suitable replacement with equivalent skills and experience. In the case of replacement of the Contractor's Representative, Sub-Clause 4.3 [*Contractor's Representative*] shall apply. In the case of replacement of Key Personnel (if any), Sub-Clause 6.12 [*Key Personnel*] shall apply.

Subject to the requirements in Sub-Clause 4.3 [*Contractor's Representative*] and 6.12 [*Key Personnel*], and notwithstanding any requirement from the Engineer to remove or cause to remove any person, the Contractor shall take immediate action as appropriate in response to any violation of (a) through (g) above. Such immediate action shall include removing (or causing to be removed) from the Site or other places where the Works are being carried out, any Contractor's Personnel who engages in (a), (b), (c), (d), (e) or (g) above or has been recruited as stated in (f) above."

**Sub-Clause 6.12**

**Key Personnel**

The following is inserted at the end of the last paragraph:

"If any of the Key Personnel are not fluent in this language, the Contractor shall make competent interpreters available during all working hours in a number deemed sufficient by the Engineer."

**The following Sub-Clauses 6.13 to 6.27 are added after sub-clause 6.12**

**Sub-Clause 6.13**

**Foreign Personnel**

The Contractor may bring in to the Country any foreign personnel who are necessary for the execution of the Works to the extent allowed by the applicable Laws. The Contractor shall ensure that these personnel are provided with the required residence visas and work permits. The Employer will, if requested by the Contractor, use its best endeavours in a timely and expeditious manner to assist the Contractor in obtaining any local, state, national, or government permission required for bringing in the Contractor's personnel.

The Contractor shall be responsible for the return of these personnel to the place where they were recruited or to their domicile. In the event of the death in the Country of any of these personnel or members of their families, the Contractor shall similarly be responsible for making the appropriate arrangements for their return or burial.

Project Director

| | |
|---|---|
| **Sub-Clause 6.14**<br>**Supply of Foodstuffs** | The Contractor shall arrange for the provision of a sufficient supply of suitable food as may be stated in the Specification at reasonable prices for the Contractor's Personnel for the purposes of or in connection with the Contract. |
| **Sub-Clause 6.15**<br>**Supply of Water** | The Contractor shall, having regard to local conditions, provide on the Site an adequate supply of drinking and other water for the use of the Contractor's Personnel. |
| **Sub-Clause 6.16**<br>**Measures against Insect and Pest Nuisance** | The Contractor shall at all times take the necessary precautions to protect the Contractor's Personnel employed on the Site from insect and pest nuisance, and to reduce the danger to their health. The Contractor shall comply with all the regulations of the local health authorities, including use of appropriate insecticide. |
| **Sub-Clause 6.17**<br>**Alcoholic Liquor or Drugs** | The Contractor shall not, otherwise than in accordance with the Laws of the Country, import, sell, give, barter or otherwise dispose of any alcoholic liquor or drugs, or permit or allow importation, sale, gift, barter or disposal thereto by Contractor's Personnel. |
| **Sub-Clause 6.18**<br>**Arms and Ammunition** | The Contractor shall not give, barter, or otherwise dispose of, to any person, any arms or ammunition of any kind, or allow Contractor's Personnel to do so. |
| **Sub-Clause 6.19**<br>**Festivals and Religious Customs** | The Contractor shall respect the Country's recognized festivals, days of rest and religious or other customs. |
| **Sub-Clause 6.20**<br>**Funeral Arrangements** | The Contractor shall be responsible, to the extent required by local regulations, for making any funeral arrangements for any of its local employees who may die while engaged upon the Works. |

Project Director

**Sub-Clause 6.21**

**Forced Labour**

The Contractor, including its Subcontractors, shall not employ or engage forced labour. Forced labour consists of any work or service, not voluntarily performed, that is exacted from an individual under threat of force or penalty, and includes any kind of involuntary or compulsory labour, such as indentured labour, bonded labour or similar labour-contracting arrangements.

No persons shall be employed or engaged who have been subject to trafficking. Trafficking in persons is defined as the recruitment, transportation, transfer, harbouring or receipt of persons by means of the threat or use of force or other forms of coercion, abduction, fraud, deception, abuse of power, or of a position of vulnerability, or of the giving or receiving of payments or benefits to achieve the consent of a person having control over another person, for the purposes of exploitation.

**Sub-Clause 6.22**

**Child Labour**

The Contractor, including its Subcontractors, shall not employ or engage a child under the age of 14 unless the national law specifies a higher age (the minimum age).

The Contractor, including its Subcontractors, shall not employ or engage a child between the minimum age and the age of 18 in a manner that is likely to be hazardous, or to interfere with, the child's education, or to be harmful to the child's health or physical, mental, spiritual, moral, or social development.

The Contractor including its Subcontractors, shall only employ or engage children between the minimum age and the age of 18 after an appropriate risk assessment has been conducted by the Contractor with the Engineer's consent. The Contractor shall be subject to regular monitoring by the Engineer that includes monitoring of health, working conditions and hours of work.

Work considered hazardous for children is work that, by its nature or the circumstances in which it is carried out, is likely to jeopardize the health, safety, or morals of children. Such work activities prohibited for children include work:

(a) with exposure to physical, psychological or sexual abuse;
(b) underground, underwater, working at heights or in confined spaces;
(c) with dangerous machinery, equipment or tools, or involving handling or transport of heavy loads;
(d) in unhealthy environments exposing children to hazardous substances, agents, or processes, or to temperatures, noise or vibration damaging to health; or

Project Director

(e) under difficult conditions such as work for long hours, during the night or in confinement on the premises of the employer.

**Sub-Clause 6.23**

**Employment Records of Workers**

The Contractor shall keep complete and accurate records of the employment of labour at the Site. The records shall include the names, ages, genders, hours worked, and wages paid to all workers. These records shall be summarized on a monthly basis and submitted to the Engineer. These records shall be included in the details to be submitted by the Contractor under Sub-Clause 6.10 [Records of Contractor's Personnel and Equipment].

**Sub-Clause 6.24**

**Workers' Organisations**

In countries where the relevant labour laws recognise workers' rights to form and to join workers' organisations of their choosing and to bargain collectively without interference, the Contractor shall comply with such laws. In such circumstances, the role of legally established workers' organizations and legitimate workers' representatives will be respected, and they will be provided with information needed for meaningful negotiation in a timely manner. Where the relevant labour laws substantially restrict workers' organisations, the Contractor shall enable alternative means for the Contractor's Personnel to express their grievances and protect their rights regarding working conditions and terms of employment. The Contractor shall not seek to influence or control these alternative means. The Contractor shall not discriminate or retaliate against the Contractor's Personnel who participate, or seek to participate, in such organisations and collective bargaining or alternative mechanisms. Workers' organisations are expected to fairly represent the workers in the workforce.

**Sub-Clause 6.25**

**Non-Discrimination and Equal Opportunity**

The Contractor shall not make decisions relating to the employment or treatment of Contractor's Personnel on the basis of personal characteristics unrelated to inherent job requirements. The Contractor shall base the employment of Contractor's Personnel on the principle of equal opportunity and fair treatment, and shall not discriminate with respect to any aspects of the employment relationship, including recruitment and hiring, compensation (including wages and benefits), working conditions and terms of employment, access to training, job assignment, promotion, termination of employment or retirement, and disciplinary practices.

Special measures of protection or assistance to remedy past discrimination or selection for a particular job based on the inherent requirements of the job shall not be deemed discrimination. The Contractor shall provide protection and

Project Director

assistance as necessary to ensure non-discrimination and equal opportunity, including for specific groups such as women, people with disabilities, migrant workers and children (of working age in accordance with Sub-Clause 6.22).

**Sub-Clause 6.26**

**Contractor's Personnel Grievance Mechanism**

The Contractor shall have a grievance mechanism for Contractor's Personnel, and where relevant the workers' organizations stated in Sub-Clause 6.24, to raise workplace concerns. The grievance mechanism shall be proportionate to the nature, scale, risks and impacts of the Contract. The mechanism shall address concerns promptly, using an understandable and transparent process that provides timely feedback to those concerned in a language they understand, without any retribution, and shall operate in an independent and objective manner.

The Contractor's Personnel shall be informed of the grievance mechanism at the time of engagement for the Contract, and the measures put in place to protect them against any reprisal for its use. Measures will be put in place to make the grievance mechanism easily accessible to all Contractor's Personnel.

The grievance mechanism shall not impede access to other judicial or administrative remedies that might be available, or substitute for grievance mechanisms provided through collective agreements.

The grievance mechanism may utilize existing grievance mechanisms, providing that they are properly designed and implemented, address concerns promptly, and are readily accessible to such Contractor's Personnel. Existing grievance mechanisms may be supplemented as needed with Contract-specific arrangements.

**Sub-Clause 6.27**

**Training of Contractor's Personnel**

The Contractor shall provide appropriate training to relevant Contractor's Personnel on ES aspects of the Contract, including appropriate sensitization on prohibition of SEA and SH, and health and safety training referred to in Sub-Clause 4.8

As stated in the Specification or as instructed by the Engineer, the Contractor shall also allow appropriate opportunities for the relevant Contractor's Personnel to be trained on ES aspects of the Contract by the Employer's Personnel.

The Contractor shall provide training on SEA and SH, including its prevention, to any of its personnel who has a role to supervise other Contractor's Personnel.

**Sub-Clause 7.3**

**Inspection**

The following is added in the first paragraph after "Employer's Personnel" "(including the Bank staff or consultants acting on the

Project Director

Bank's behalf, stakeholders and third parties, such as independent experts, local communities, or non-governmental organizations)"

The following is added as (b) (iv):

"(iv) carryout environmental and social audit, and"

In sub-paragraph (b) delete "and construction" and replace with ", construction and performance based maintenance".

**Sub-Clause 7.7**

**Ownership of Plant and Materials**

The following is added before the first paragraph:

"Except as otherwise provided in the Contract,"

**Sub-Clause 8.1**

**Commencement of Work**

The Sub- Clause is replaced in its entirety with the following:

"The Engineer shall give a Notice to the Contractor stating the Commencement Date, not less than 14 days before the Commencement Date.

The Notice shall be issued promptly after the Engineer determines the fulfilment of the following conditions:

(a) signature of the Contract Agreement by both Parties, and if required, approval of the Contract by relevant authorities of the Country;

(b) delivery to the Contractor of reasonable evidence of the Employer's financial arrangements (under Sub-Clause 2.4 [Employer's Financial Arrangements]);

(c) except if otherwise specified in the Contract Data, effective access to and possession of the Site given to the Contractor together with such permission(s) under (a) of Sub-Clause 1.13 [Compliance with Laws] as required for the commencement of the Works;

(d) receipt by the Contractor of the Advance Payment under Sub-Clause 14.2 [Advance Payment] provided that the corresponding bank guarantee has been delivered by the Contractor;

(e) constitution of the DAAB in accordance with Sub-Clause 21.1 and Sub-Clause 21.2 as applicable.

Subject to Sub-Clause 4.1 on the Management Strategies and Implementation Plans and the C-ESMP and Sub-Clause 4.8 on the health and safety manual, the Contractor shall commence the execution of the Works as soon as is reasonably practicable after the Commencement Date, and shall then proceed with the Works with due expedition and without delay."

Project Director

**Sub-Clause 10.2**

Taking Over Parts

Add the following sentence at the end of the Sub-Clause 10.2

In the operation of this Sub-clause the passage over or through the Works by the public or the agents or servants of the Employer or by public traffic or by vehicles of the Employer, whether connected with the Contract or not, shall not constitute use or occupation by the Employer.

In the second paragraph immediately after "DNP" add "of the Phase 1: Improvement/Construction Works".

In sub-paragraph (a), after "Taking-Over Certificate" insert "for Phase 1: Improvement/Construction Works".

In the first paragraph immediately after "taking over" add "for Phase 1: Improvement/Construction Works".

**Sub-Clause 11.7**

**Right of Access after Taking Over**

In the second paragraph, "Whenever the Contractor intends to access any part of the Works during the relevant DNP:" is replaced with:

"Whenever, until the date 28 days after issue of the Performance Certificate, the Contractor intends to access any part of the Works:"

**Sub-Clause 11.9**

**Performance Certificate**

Delete the second paragraph and replace with the following:

"Separate Performance Certificate shall be issued for Phase 1: Improvement/Construction Works and Phase 2: Performance Based Maintenance Works. The Engineer shall issue Performance Certificate for Phase 1 (with a copy to the Employer and DAAB) within 28 days after the latest of the expiry dates of the Defect Notification Periods, or as soon thereafter as the Contractor has supplied all the Contractor's Documents and completed and tested all the Works (including remedying any defects) in accordance with the Contract. The Engineer shall issue Performance Certificate for Phase 2: Performance Based Maintenance Works after completing all the works specified in Special Provisions to the Standard Specifications for Performance Based Maintenance. A copy of the Performance Certificates shall be issued to the Employer."

**Sub-Clause 12.3**

**Valuation of the Works**

Replace Clause 12.3 (b) (i) and (ii) with the followings"

(i) the measured quantity of the item is changed by more than 25%from the quantity of this item in the Bill of Quantities or other schedule.

Project Director

(ii) this change in quantity multiplied by the rate or price specified in the Bill of Quantities or other specified in the Bill of Quantities or other Shedule for this item exceeds 0.25% of the Accepted Contract Amount.

Delete Sub-Clause 12.3(b) (iii)

**Sub-Clause 13.3.1**

**Variation by Instruction**

Subparagraph 13.3.1 (a) is replaced with: "a description of the varied work performed or to be performed, including details of the resources and methods adopted or to be adopted by the Contractor, and sufficient ES information to enable an evaluation of ES risks and impacts;"

**Sub-Clause 13.4**

**Provisional Sums**

Add the following paragraphs at the end of (b) (ii) of Sub-clause 13.4:

"For the emergency works during Phase 2, the budget is allocated in the provisional sums for the payment of the works.

The payment for emergency works shall be made at existing Bill of Quantities (BoQ) rates or at appropriate Dayworks rates for each corresponding BoQ pay items with the Adjustments for Changes in Cost in accordance with Sub-clause 13.8. Such payments shall not be subject to additional overhead because of the fact that the BoQ and Dayworks rates quoted by the Contractor are with his overhead".

The following is inserted as the penultimate paragraph:

"The Provisional Sum shall be used to cover the Employer's share of the DAAB members' fees and expenses, in accordance with Clause 21. No prior instruction of the Engineer shall be required with respect to the work of the DAAB. The Contractor shall submit the DAAB members' invoices and satisfactory evidence of having paid 100% of such invoices as part of the substantiation of those Statements submitted under Sub-Clause 14.3."

**Sub-Clause 13.6**

**Adjustments for Changes in Laws**

The following paragraph is added at the end of the Sub-Clause:

"Notwithstanding the foregoing, the Contractor shall not be entitled to an extension of time if the relevant delay has already been taken into account in the determination of a previous extension of time and such Cost shall not be separately paid if the same shall already have been taken into account in the indexing of any inputs to the Table of Adjustment Data in accordance with the provisions of Sub-Clause 13.7 [Adjustments for Changes in Cost]."

**Sub-Clause 14.1**

The following is added at the end of the Sub-Clause:

Project Director

**The Contract Price**

"Notwithstanding the provisions of subparagraph (b), Contractor's Equipment, including essential spare parts therefore, imported by the Contractor for the sole purpose of executing the Contract shall be temporarily exempt from the payment of import duties and taxes upon initial importation, provided the Contractor shall post with the customs authorities at the port of entry an approved export bond or bank guarantee, valid until the Time for Completion plus six months, in an amount equal to the full import duties and taxes which would be payable on the assessed imported value of such Contractor's Equipment and spare parts, and callable in the event the Contractor's Equipment is not exported from the Country on completion of the Contract. A copy of the bond or bank guarantee endorsed by the customs authorities shall be provided by the Contractor to the Employer upon the importation of individual items of Contractor's Equipment and spare parts. Upon export of individual items of Contractor's Equipment or spare parts, or upon the completion of the Contract, the Contractor shall prepare, for approval by the customs authorities, an assessment of the residual value of the Contractor's Equipment and spare part to be exported, based on the depreciation scale (s and other criteria used by the customs authorities for such purposes under the provisions of the applicable Laws. Import duties and taxes shall be due and payable to the customs authorities by the Contractor on (a) the difference between the initial imported value and the residual value of the Contractor's Equipment and spare parts to exported; and (b) on the initial imported value of the Contractor's Equipment and spare parts remaining in the Country after completion of the Contract. Upon payment of such dues within 28 days of being invoiced, the bond or bank guarantee shall be reduced or released accordingly; otherwise the security shall be called in the full amount remaining."

**Sub-Clause 14.2.1**

The first paragraph is replaced with:

**Advance Payment Guarantee**

"The Contractor shall obtain (at the Contractor's cost) an Advance Payment Guarantee in amounts and currencies equal to the advance payment, and shall submit it to the Employer with a copy to the Engineer. This guarantee shall be issued by reputable bank or financial institution selected by the Contractor and shall be based on the sample form annexed to the Particular Conditions or in another form agreed by the Employer (but such agreement shall not relieve the Contractor from any obligation under this Sub-Clause)."

**Sub-Clause 14.3**

The following is inserted at the end of (vi) after: *[Agreement or Determination]*: "any reimbursement due to the Contractor under

Project Director

**Application for Interim Payment**

the Dispute Avoidance/ Adjudication Agreement. (Appendix General Conditions of Dispute Avoidance/ Adjudication Agreement)."

**Sub-Clause 14.6.2**

"and/or" from subparagraph (b) is deleted.

**Withholding (amounts in) an IPC**

The following is then added as subparagraph (c) and sub-paragraph (c) of the Sub-Clause is renumbered as (d):

"(c) if the Contractor was, or is, failing to perform any ES obligations or work under the Contract, the value of this work or obligation, as determined by the Engineer, may be withheld until the work or obligation has been performed, and/or the cost of rectification or replacement, as determined by the Engineer, may be withheld until rectification or replacement has been completed. Failure to perform includes, but is not limited to the following:

(i) failure to comply with any ES obligations or work described in the Works' Requirements which may include: working outside site boundaries, excessive dust, damage to offsite vegetation, pollution of water courses from oils or sedimentation, contamination of land e.g. from oils, human waste, damage to archaeology or cultural heritage features, air pollution as a result of unauthorized and/or inefficient combustion;

(ii) failure to regularly review C-ESMP and/or update it in a timely manner to address emerging ES issues, or anticipated risks or impacts;

(iii) failure to implement the C-ESMP e.g. failure to provide required training or sensitization;

(iv) failing to have appropriate consents/permits prior to undertaking Works or related activities;

(v) failure to submit ES report/s (as described in Particular Conditions - Part D), or failure to submit such reports in a timely manner;

(vi) failure to implement remediation as instructed by the Engineer within the specified timeframe (e.g. remediation addressing non-compliance/s)."

**Sub-Clause 14.7**

**Payment**

At the end of sub-paragraph (b): "and" is replaced with "or" and the following inserted as (iii):

"(iii) at a time when the Bank's loan or credit (from which part of the payments to the Contractor is being made) is suspended, the amount shown on any statement submitted by the Contractor within 14 days after such statement is submitted,

Project Director

any discrepancy being rectified in the next payment to the Contractor; and"

At the end of sub-paragraph (c): "." is replaced with ";" and the following inserted:

"or, at a time when the Bank's loan or credit (from which part of the payments to the Contractor is being made) is suspended the undisputed amount shown in the Final Statement within 56 days after the date of notification of the suspension in accordance with Sub-Clause 16.2 [Termination by Contractor]."

**Sub-Clause 14.9**

**Release of Retention Money**

Add "Phase 1: Improvement/Construction" before "Works" in sub-paragraph (a).

The following is added at the end of Sub-Clause 14.9:

"Unless otherwise stated in the Contract, when the Taking-Over Certificate has been issued for the Phase 1: Improvement/Construction Works and the first half of the Retention Money has been certified for payment by the Engineer, the Contractor shall be entitled to substitute a guarantee, in the form annexed to the Particular Conditions or in another form approved by the Employer and issued by a reputable bank or financial institution selected by the Contractor, for the second half of the Retention Money. The Contractor shall ensure that the guarantee is in the amounts and currencies of the second half of the Retention Money and is valid and enforceable until the Contractor has executed and completed the Works and remedied any defects, as specified for the Performance Security and, if applicable, an ES Performance Security in Sub-Clause 4.2. On receipt by the Employer of the required guarantee, the Engineer shall certify and the Employer shall pay the second half of the Retention Money. The release of the second half of the Retention Money against a guarantee shall then be in lieu of the release after the latest of the expiry dates of the Defects Notification Periods. The Employer shall return the guarantee to the Contractor within 21 days after receiving a copy of the Performance Certificate of Phase 1: Improvement/Construction Works.

If the Performance Security and, if applicable, an ES Performance Security required under Sub-Clause 4.2 is in the form of a demand guarantee, and the amount guaranteed under them when the Taking-Over Certificate is issued is more than half of the Retention Money, then the Retention Money guarantee will not be required. If the amount guaranteed under the Performance Security and, if applicable, an ES Performance

Project Director

Security, when the Taking-Over Certificate is issued is less than half of the Retention Money, the Retention Money guarantee will only be required for the difference between half of the Retention Money and the amount guaranteed under the Performance Security and, if applicable, an ES Performance Security."

**Sub-Clause 14.12**

**Discharge**

On the seventh line of the first paragraph, "Sub-Clause 21.6 [*Arbitration]*" is replaced with: "Clause 21 *[Disputes and Arbitration]'.*

**Sub-Clause 14.15**

**Currencies of Payment**

Throughout Sub-Clause 14.15, "Contract Data" is replaced with: "Schedule of Payment Currencies".

**Sub-Clause 14.16**

**Payment Reduction**

Add additional Clause 14.16 "Payment Reduction" as below:

Reduction of monthly payments for performance based maintenance works shall be applied in case of non- compliance with Service Levels by means of Payment Reduction Points (PRP), as indicated in the Section 3200 of Part 2: Employers Requirements.

The value of each Payment Reduction Point (PRP) is NRs. 600.00 during the first full six (6) months of Phase 2 and NRs. 1,000.00 thereafter.

The Payment Reduction Points are subject to price adjustment in a manner as described in Clause 13.8 for Phase 2 works.

**Sub-Clause 15.1**

**Notice to Correct**

"and" is deleted from (b) and

"." is replaced by: "; and" in (c).

The following is then added as (d)

"(d) specify the time within which the Contractor shall respond to the Notice to Correct."

In the third para., "shall immediately respond" is replaced with: "shall respond within the time specified in (d)". Further, in the third para., "to comply with the time specified in the Notice to Correct." is replaced with: "to comply with the time specified in (c)."

**Sub-Clause 15.2.1**

**Notice**

Sub-paragraph (h) is replaced with: "based on reasonable evidence, has engaged in Fraud and Corruption as defined in paragraph 2.2 of the Particular Conditions - Part C- Fraud and Corruption, in competing for or in executing the Contract."

Project Director

**Sub-Clause 15.8**

**Fraud and Corruption**

The following new Sub-Clause is added:

"15.8.1 The Bank requires compliance with the Bank's Anti-Corruption Guidelines and its prevailing sanctions policies and procedures as set forth in the Bank's Sanctions Framework, as set forth in Particular Conditions - Part C- Fraud and Corruption.

15.8.2 The Employer requires the Contractor to disclose any commissions or fees that may have been paid or are to be paid to agents or any other party with respect to the bidding process or execution of the Contract. The information disclosed must include at least the name and address of the agent or other party, the amount and currency, and the purpose of the commission, gratuity or fee."

**Sub-Clause 16.1**

**Suspension by Contractor**

The following paragraph is inserted after the first paragraph:

"Notwithstanding the above, if the Bank has suspended disbursements under the loan or credit from which payments to the Contractor are being made, in whole or in part, for the execution of the Works, and no alternative funds are available as provided for in Sub-Clause 2.4 [Employer's Financial Arrangements], the Contractor may by notice suspend work or reduce the rate of work at any time, but not less than 7 days after the Borrower having received the suspension notification from the Bank."

**Sub-Clause 16.2.1**

**Notice**

Sub-paragraph (j) is deleted in its entirety.

At the end of sub-paragraph (i): "; or" is replaced with: "."

sub-paragraph (f) is replaced with:

"(f) the Contractor does not receive a Notice of the Commencement Date under Sub-Clause 8.1 [*Commencement of Works*] within 180 days after receiving the Letter of Acceptance, for reasons not attributable to the Contractor."

**Sub-Clause 16.2.2**

**Termination**

The following is added at the end of Sub-Clause 16.2.2:

"In the event the Bank suspends the loan or credit from which part or whole of the payments to the Contractor are being made, if the Contractor has not received the sums due to him upon expiration of the 14 days referred to in Sub-Clause 14.7 [Payment] for payments under Interim Payment Certificates, the Contractor may, without prejudice to the Contractor's entitlement to financing charges under Sub-Clause 14.8 [Delayed Payment],

Project Director

take one of the following actions, namely (i) suspend work or reduce the rate of work under Sub-Clause 16.1 above, or (ii) terminate the Contract by giving notice to the Employer, with a copy to the Engineer, such termination to take effect 14 days after the giving of the notice."

**Sub-Clause 16.3**

**Contractor's Obligations After Termination**

"and" is deleted from the end of sub-paragraph (b), sub-paragraph (c) deleted and the following added:

"

(c) deliver to the Engineer all Employer- Supplied Materials and/or Employer's Equipment made available to the Contractor in accordance with Sub-Clause 2.6 *[Employer-Supplied materials and Employer's Equipment]; and*

(d) remove all other Goods from the Site, except as necessary for safety, and leave the Site."

**Sub-Clause 17.1**
**Responsibility for Care of the Works**

On the fourth and fifth lines of the first paragraph, replace "Date of Completion of the Works" with "issue of the Taking-Over Certificate for the Works".

After the two instances of "Goods" in the last paragraph, the following is added: "Employer- Supplied Materials".

After the two instances of "Goods" in the last paragraph, the following is added: ", Employer's Equipment,".

Add at the end of the sub-clause 17.1 as follows:

"The Contractor shall carefully protect all work and materials that may be affected by weather from injury thereby.

The Contractor shall provide storage to the satisfaction of the Engineer for materials to be incorporated in the Works or to be delivered to the Employer. S`ruch storage shall be of a kind that will prevent loss of or damage to the materials. The Contractor shall take particular care to ensure the security of stores containing materials the loss of which would be likely to cause significant delay to the completion of the Works or part thereof."

**Sub-Clause 17.3**

**Intellectual and Industrial Property Rights**

On the first line of the second paragraph, replace "notice" is replaced with "a Notice".

**Sub-Clause 17.7**

The following Sub-Clause is added as 17.7:

Project Director

| | |
|---|---|
| **Use of Employer's Accommodation/Facilities** | "The Contractor shall take full responsibility for the care of the Employer-provided accommodation and facilities, if any, as detailed in the Specification, from the respective dates of hand-over to the Contractor until cessation of occupation (where hand-over or cessation of occupation may take place after the date stated in the Taking-Over Certificate for the Works)<br><br>If any loss or damage happens to any of the above items while the Contractor is responsible for their care arising from any cause whatsoever other than those for which the Employer is liable, the Contractor shall, at its own cost, rectify the loss or damage to the satisfaction of the Engineer." |
| **Sub-Clause 18.1**<br><br>**Exceptional Events** | Sub-paragraph (c) is substituted with:<br><br>"(c) riot, commotion, disorder or sabotage by persons other than the Contractor's Personnel and other employees of the Contractor and Subcontractors;" |
| **Sub-Clause 18.4**<br><br>**Consequences of an Exceptional Event** | The following is added at the end of sub-paragraph (b) after deleting the ".":<br><br>", including the costs of rectifying or replacing the Works and/or Goods damaged or destroyed by Exceptional Events, to the extent they are not indemnified through the insurance policy referred to in Sub-Clause 19.2 [ Insurance to be provided by the Contractor]." |
| **Sub-Clause 18.5**<br><br>**Optional Termination** | In sub-paragraph (c), "and necessarily" is inserted after ""was reasonably". |
| **Sub-Clause 19.1**<br><br>**General Requirements** | The following paragraphs are added after the first:<br><br>"Wherever the Employer is the insuring Party, each insurance shall be effected with insurers and in terms acceptable to the Contractor. These terms shall be consistent with terms (if any) agreed by both Parties before the date of the Letter of Acceptance.<br><br>This agreement of terms shall take precedence over the provisions of this Clause." |
| **Sub-Clause 19.2**<br><br>**insurance to be provided by the Contractor** | The following is inserted as the first sentence in Sub-Clause 19.2:<br><br>"The Contractor shall be entitled to place all insurances relating to the Contract (including, but not limited to the insurance referred to Clause 19) with insurers from any eligible source country." |
| **Sub-Clause 19.2.1** | On the last line of the second paragraph, "Clause 12 *[Tests after completion]*" is deleted. |

Project Director

**The Works**

| | |
|---|---|
| **Sub-Clause 19.2.5**<br>**Injury to employees** | The second paragraph is replaced with:<br>"The Employer and the Engineer shall also be indemnified under the policy of insurance, against liability for claims, damages, losses and expenses (including legal fees and expenses) arising from injury, sickness, disease or death of any person employed by the Contractor or any other of the Contractor's Personnel, except that this insurance may exclude losses and claims to the extent that they arise from any act or neglect of the Employer or of the Employer's Personnel." |
| **Sub-Clause 20.1**<br>**Claims** | In a): "any additional payment" is replaced with "payment". |
| **Sub-Clause 20.2**<br>**Claims for Payment and/or EOT** | The first paragraph is replaced with:<br>"If either Party considers that it is entitled to claim under 20.1 (a) or (b), the following claim procedure shall apply:" |
| **Sub-Clause 21.1**<br>**Constitution of the DAAB** | In the second paragraph, at the end of the first sentence after deleting: ".", the following is added: ", each of whom shall meet the criteria set forth in Sub-Clause 3.3 of Appendix- General Conditions of Dispute Avoidance/ Adjudication Agreement."<br>After the second paragraph insert the following paragraph: "If the Contract is with a foreign Contractor, the DAAB members shall not have the same nationality as the Employer or the Contractor." |
| **Sub-Clause 21.2**<br>**Failure to Appoint DAAB Member (s)** | For both (a) and (b): "by the date stated in the first paragraph of Sub-Clause 21.1 [*Constitution of the DAAB*]" is replaced with: "within 42 days from the date the Contract is signed by both Parties" |
| **Sub-Clause 21.6**<br>**Arbitration** | In the first paragraph, delete starting from: "international arbitration" up to the end of (c), and replace with the following:<br>"arbitration. Arbitration shall be conducted as follows:<br>(a) if the contract is with foreign contractors, unless otherwise specified in the Contract Data; the dispute shall be finally settled under the Rules of Arbitration of the International Chamber of Commerce; by one or three arbitrators appointed in accordance with these Rules. The place of arbitration shall be the neutral location specified in the Contract Data; and the arbitration shall be conducted in the |

Project Director

ruling language defined in Sub-Clause 1.4 [Law and Language].

If the Contract is with domestic contractors, arbitration with proceedings conducted in accordance with the laws of the Employer's country."

Project Director

## Appendix- General Conditions of Dispute Avoidance/Adjudication Agreement

**Title**

"General Conditions of Dispute Avoidance/Adjudication Agreement" is replaced with "General Conditions of DAAB Agreement".

**1. Definitions**

Sub-Clause 1.2: In both the first and third lines, "DAA Agreement" is replaced with "DAAB Agreement".

Sub-Clause 1.3:

-In the first line, "Dispute Avoidance/Adjudication Agreement" or "DAA Agreement" means" is replaced with:

"DAAB Agreement" is as defined under the Contract and is".

- In the first line of sub-paragraph (c), "DAA Agreement" is replaced with "DAAB Agreement".

- In sub-paragraph (c)(ii), "chairman" is replaced with "chairperson".

Sub-Clause 1.3 "DAAB Activities" is replaced with Sub-Clause 1.4 "DAAB Activities" and the subsequent Sub- Clauses under Clause 1 "Definitions" renumbered:

Sub-Clause 1.7 to 12: Replace all instances of "DAA Agreement" with "DAAB Agreement".

In Sub-Clause 1.8 a(i):" authorised representative of the contractor or of the Employer" is replaced with: "Contractor's Representative or authorised representative of the Employer".

**2. General provisions**

Sub-Clause 2.2 is deleted in its entirety.

**3. Warranties**

Sub-Clause 3.3 is deleted and replaced with the following:

"When appointing the DAAB Member, each Party relies on the DAAB Member's representations, that he/she:

a) has at least a bachelor's degree in relevant disciplines such as law, engineering, construction management or contract management;
b) has at least ten years of experience in contract administration/management and dispute resolution, out of which at least five years of experience as an arbitrator or adjudicator in construction-related disputes;
c) has received formal training as an adjudicator from an internationally recognized organization;
d) has experience and/or is knowledgeable in the type of work which the Contractor is to carry out under the Contract;

Project Director

e) has experience in the interpretation of construction and/or engineering contract documents;
f) has familiarity with the forms of contract published by FIDIC since 1999, and an understanding of the dispute resolution procedures contained therein; and
g) is fluent in the language for communications stated in the Contract Data (or the language as agreed between the Parties and the DAAB)."

**7. Confidentiality**

In Sub-Clause 7.3: "or" is deleted after sub-paragraph (b),

and the following added:

"or (d) is being provided to the Bank."

**9. Fees and Expenses**

In Sub-Clause 9.1 (c): "business class or equivalent" is replaced with: "in less than first class".

In Sub-Clause 9.4: "and air fares" and "other" are deleted from the first and second sentences respectively.

**10. Resignation and Termination**

In Sub-Clause 10.3: "the DAA Agreement" is replaced with: "a DAAB member's DAAB Agreement".

**Annex- DAAB Procedural Rules**

Rule 4.2 On the fourth line, "chairman" is replaced with "chairperson".

Rule 8.3 On the sixth line, "chairman" is replaced with "chairperson".

**Form of Dispute Avoidance/Adjudication Agreement**

All instances of "DAA Agreement" are replaced with: "DAAB Agreement".

In C (b): "chairman" is replaced with "chairperson".

Project Director

# Particular Conditions

## Part C- Fraud and Corruption

***(Text in this Particular Conditions - Part C shall not be modified)***

1. **Purpose**

1.1 The Bank's Anti-Corruption Guidelines and this annex apply with respect to procurement under Bank Investment Project Financing operations.

2. **Requirements**

2.1 The Bank requires that Borrowers (including beneficiaries of Bank financing); bidders, consultants, contractors and suppliers; any sub-contractors, sub-consultants, service providers or suppliers; any agents (whether declared or not); and any of their personnel, observe the highest standard of ethics during the procurement process, selection and contract execution of Bank-financed contracts, and refrain from Fraud and Corruption.

2.2 To this end, the Bank:

a. Defines, for the purposes of this provision, the terms set forth below as follows:

i. "corrupt practice" is the offering, giving, receiving, or soliciting, directly or indirectly, of anything of value to influence improperly the actions of another party;

ii. "fraudulent practice" is any act or omission, including misrepresentation, that knowingly or recklessly misleads, or attempts to mislead, a party to obtain financial or other benefit or to avoid an obligation;

iii. "collusive practice" is an arrangement between two or more parties designed to achieve an improper purpose, including to influence improperly the actions of another party;

iv. "coercive practice" is impairing or harming, or threatening to impair or harm, directly or indirectly, any party or the property of the party to influence improperly the actions of a party;

v. "obstructive practice" is:

(a) deliberately destroying, falsifying, altering, or concealing of evidence material to the investigation or making false statements to investigators in order to materially impede a Bank investigation into allegations of a

Project Director

corrupt, fraudulent, coercive, or collusive practice; and/or threatening, harass or intimidating any party to prevent it from disclosing its knowledge of matters relevant to the investigation or from pursuing the investigation; or

(b) acts intended to materially impede the exercise of the Bank's inspection and audit rights provided for under paragraph 2.2 e. below.

b. Rejects a proposal for award if the Bank determines that the firm or individual recommended for award, any of its personnel, or its agents, or its sub-consultants, sub-contractors, service providers, suppliers and/ or their employees, has, directly or indirectly, engaged in corrupt, fraudulent, collusive, coercive, or obstructive practices in competing for the contract in question;

c. In addition to the legal remedies set out in the relevant Legal Agreement, may take other appropriate actions, including declaring misprocurement, if the Bank determines at any time that representatives of the Borrower or of a recipient of any part of the proceeds of the loan engaged in corrupt, fraudulent, collusive, coercive, or obstructive practices during the procurement process, selection and/or execution of the contract in question, without the Borrower having taken timely and appropriate action satisfactory to the Bank to address such practices when they occur, including by failing to inform the Bank in a timely manner at the time they knew of the practices;

d. Pursuant to the Bank's Anti- Corruption Guidelines and in accordance with the Bank's prevailing sanctions policies and procedures, may sanction a firm or individual, either indefinitely or for a stated period of time, including by publicly declaring such firm or individual ineligible (i) to be awarded or otherwise benefit from a Bank-financed contract, financially or in any other manner[1]; (ii) to be a nominated [2] sub-contractor, consultant, manufacturer or supplier, or service provider of an otherwise eligible firm being awarded a Bank-financed contract; and (iii) to receive the proceeds of any loan made by the Bank or otherwise to

[1] For the avoidance of doubt, a sanctioned party's ineligibility to be awarded a contract shall include, without limitation, (i) applying for pre-qualification, expressing interest in a consultancy, and bidding, either directly or as a nominated sub-contractor, nominated consultant, nominated manufacturer or supplier, or nominated service provider, in respect of such contract, and (ii) entering into an addendum or amendment introducing a material modification to any existing contract.

[2] A nominated sub-contractor, nominated consultant, nominated manufacturer or supplier, or nominated service provider (different names are used depending on the particular bidding document) is one which has been: (i) included by the bidder in its pre-qualification application or bid because it brings specific and critical experience and know-how that allow the bidder to meet the qualification requirements for the particular bid; or (ii) appointed by the Borrower.

Project Director

participate further in the preparation or implementation of any Bank-financed project;

e. Requires that a clause be included in bidding/request for proposals documents and in contracts financed by a Bank loan, requiring (i) bidders, consultants, contractors, and suppliers, and their sub-contractors, sub-consultants, service providers, suppliers, agents personnel, permit the Bank to inspect [3] all accounts, records and other documents relating to the submission of bids and contract performance, and to have them audited by auditors appointed by the Bank.

[3] Inspections in this context usually are investigative (i.e., forensic) in nature. They involve fact-finding activities undertaken by the Bank or persons appointed by the Bank to address specific matters related to investigations/audits, such as evaluating the veracity of an allegation of possible Fraud and Corruption, through the appropriate mechanisms. Such activity includes but is not limited to: accessing and examining a firm's or individual's financial records and information, and making copies thereof as relevant; accessing and examining any other documents, data and information (whether in hard copy or electronic format) deemed relevant for the investigation/audit, and making copies thereof as relevant; interviewing staff and other relevant individuals; performing physical inspections and site visits; and obtaining third party verification of information.

Project Director

# Particular Conditions

## Part D- Environmental and Social (ES)

*Metrics for regular reporting:*

a. *environmental incidents or non-compliances with contract requirements, including contamination, pollution or damage to ground or water supplies;*
b. *health and safety incidents, accidents, injuries that require treatment and all fatalities;*
c. *interactions with regulators: identify agency, dates, subjects, outcomes (report the negative if none);*
d. *status of all permits and agreements:*
   (i) work permits: number required, number received, actions taken for those not received;
   (ii) status of permits and consents:
   - list areas/facilities with permits required (quarries, asphalt & batch plants), dates of application, dates issued (actions to follow up if not issued), dates submitted to resident engineer (or equivalent), status of area (waiting for permits, working, abandoned without reclamation, decommissioning plan being implemented, etc.);
   - list areas with landowner agreements required (borrow and spoil areas, camp sites), dates of agreements, dates submitted to resident engineer (or equivalent);
   - identify major activities undertaken in each area in the reporting period and highlights of environmental and social protection (land clearing, boundary marking, topsoil salvage, traffic management, decommissioning planning, decommissioning implementation);
   - for quarries: status of relocation and compensation (completed, or details of activities and current status in the reporting period).
e. *health and safety supervision:*
   (i) safety officer: number days worked, number of full inspections & partial inspections, reports to construction/project management;
   (ii) number of workers, work hours, metric of PPE use (percentage of workers with full personal protection equipment (PPE), partial, etc.), worker violations observed (by type of violation, PPE or otherwise), warnings given, repeat warnings given, follow-up actions taken (if any);
f. *worker accommodations:*
   (i) number of expats housed in accommodations, number of locals;
   (ii) date of last inspection, and highlights of inspection including status of accommodations' compliance with national and local law and good practice, including sanitation, space, etc.;

Project Director

(iii) actions taken to recommend/require improved conditions, or to improve conditions.

g. *Health services: provider of health services, information and/or training, location of clinic, number of non-safety disease or illness treatments and diagnoses (no names to be provided);*

h. *gender (for expats and locals separately): number of female workers, percentage of workforce, gender issues raised and dealt with (cross-reference grievances or other sections as needed);*

i. *training:*

(i) number of new workers, number receiving induction training, dates of induction training;

(ii) number and dates of toolbox talks, number of workers receiving Occupational Health and Safety (OHS), environmental and social training;

(iii) number and dates of communicable diseases (including STDs) sensitization and/or training, no. workers receiving training (in the reporting period and in the past); same questions for gender sensitization, flag person training.

(iv) number and date of SEA and SH prevention sensitization and/or training events, including number of workers receiving training on Code of Conduct for Contractor's Personnel (in the reporting period and in the past), etc.

j. *environmental and social supervision:*

(i) environmentalist: days worked, areas inspected and numbers of inspections of each (road section, work camp, accommodations, quarries, borrow areas, spoil areas, swamps, forest crossings, etc.), highlights of activities/findings (including violations of environmental and/or social best practices, actions taken), reports to environmental and/or social specialist/construction/site management;

(ii) sociologist: days worked, number of partial and full site inspections (by area: road section, work camp, accommodations, quarries, borrow areas, spoil areas, clinic, HIV/AIDS center, community centers, etc.), highlights of activities (including violations of environmental and/or social requirements observed, actions taken), reports to environmental and/or social specialist/construction/site management; and

(iii) community liaison person(s): days worked (hours community center open), number of people met, highlights of activities (issues raised, etc.), reports to environmental and/or social specialist /construction/site management.

k. *Grievances: list new grievances (e.g. number of allegations of SEA and SH) received in the reporting period and number of unresolved past grievances by date received, complainant's age and sex, how received, to whom referred to for action, resolution and date (if completed), data resolution reported to complainant, any required follow-up (Cross-reference other sections as needed):*

(i) Worker grievances;

Project Director

(ii) Community grievances

*l. Traffic, road safety and vehicles/equipment:*

(i) traffic and road safety incidents and accidents involving project vehicles & equipment: provide date, location, damage, cause, follow-up;

(ii) traffic and road safety incidents and accidents involving non-project vehicles or property (also reported under immediate metrics): provide date, location, damage, cause, follow-up;

(iii) overall condition of vehicles/equipment (subjective judgment by environmentalist); non-routine repairs and maintenance needed to improve safety and/or environmental performance (to control smoke, etc.).

*m. Environmental mitigations and issues (what has been done):*

(i) dust: number of working bowsers, number of waterings/day, number of complaints, warnings given by environmentalist, actions taken to resolve; highlights of quarry dust control (covers, sprays, operational status); % of rock/ spoil lorries with covers, actions taken for uncovered vehicles;

(ii) erosion control: controls implemented by location, status of water crossings, environmentalist inspections and results, actions taken to resolve issues, emergency repairs needed to control erosion/sedimentation;

(iii) quarries, borrow areas, spoil areas, asphalt plants, batch plants: identify major activities undertaken in the reporting period at each, and highlights of environmental and social protection: land clearing, boundary marking, topsoil salvage, traffic management, decommissioning planning, decommissioning implementation;

(iv) blasting: number of blasts (and locations), status of implementation of blasting plan (including notices, evacuations, etc.), incidents of off-site damage or complaints (cross-reference other sections as needed);

(v) spill clean-ups, if any: material spilled, location, amount, actions taken, material disposal (report all spills that result in water or soil contamination;

(vi) waste management: types and quantities generated and managed, including amount taken offsite (and by whom) or reused/recycled/disposed on-site;

(vii) details of tree plantings and other mitigations required undertaken in the reporting period;

(viii) details of water and swamp protection mitigations required undertaken in the reporting period.

*n. compliance:*

(i) compliance status for conditions of all relevant consents/permits, for the Work, including quarries, etc.): statement of compliance or listing of issues and actions taken (or to be taken) to reach compliance;

(ii) compliance status of C-ESMP/ESIP requirements: statement of compliance or listing of issues and actions taken (or to be taken) to reach compliance

Project Director

(iii) compliance status of SEA and SH prevention and response action plan: statement of compliance or listing of issues and actions taken (or to be taken) to reach compliance

(iv) compliance status of Health and Safety Management Plan re: statement of compliance or listing of issues and actions taken (or to be taken) to reach compliance

(v) other unresolved issues from previous reporting periods related to environmental and social: continued violations, continued failure of equipment, continued lack of vehicle covers, spills not dealt with, continued compensation or blasting issues, etc. Cross-reference other sections as needed.

Project Director

# Particular Conditions

## Part E- Sexual Exploitation and Abuse (SEA) and/or Sexual Harassment Performance Declaration for Subcontractors

*[The following table shall be filled in by each subcontractor proposed by the Contractor, that was not named in the Contract]*

Subcontractor's Name: *[insert full name]*
Date: *[insert day, month, year]*
Contract reference *[insert contract reference]*
Page *[insert page number]* of *[insert total number]* pages

| **SEA and/or SH Declaration** |
|---|
| We:<br>☐ (a) have not been subject to disqualification by the Bank for non-compliance with SEA/ SH obligations.<br>☐ (b) are subject to disqualification by the Bank for non-compliance with SEA/ SH obligations.<br>☐ (c) had been subject to disqualification by the Bank for non-compliance with SEA/ SH obligations. An arbitral award on the disqualification case has been made in our favor.<br>☐ (d) had been subject to disqualification by the Bank for non-compliance with SEA/ SH obligations for a period of two years. We have subsequently demonstrated that we have adequate capacity and commitment to comply with SEA /SH obligations.<br>☐ (e) had been subject to disqualification by the Bank for non-compliance with SEA/ SH obligations for a period of two years. We have attached specific evidence demonstrating that we have adequate capacity and commitment to comply with SEA and SH obligations. |
| **[*If (c) above is applicable, attach evidence of an arbitral award reversing the findings on the issues underlying the disqualification.]*** |
| ***[If (d) or ( e) above are applicable, provide the following information:]*** |
| Period of disqualification: From: _____ To: _____ |
| If previously provided on another Bank financed works contract, details of evidence that demonstrated adequate capacity and commitment to comply with SEA/SH obligations (**as per (d) above)**<br>Name of Employer: _____<br>Name of Project: _____<br>Contract description: _____<br>Brief summary of evidence provided: _____<br>_____ |

Project Director

| |
|---|
| Contact Information: (Tel, email, name of contact person): _____<br>_____ |
| As an alternative to the evidence under (d), other evidence demonstrating adequate capacity and commitment to comply with SEA/SH obligations (**as per (e) above) )** *[attach details as appropriate]*.<br>_____<br>_____ |

Name of the Subcontractor_____

Name of the person duly authorized to sign on behalf of the Subcontractor_____

Title of the person signing on behalf of the Subcontractor_____

Signature of the person named above_____

Date signed _____ day of _____, _____

Countersignature of authorized representative of the Contractor:

Signature: _____

Date signed _____ day of _____, _____

Project Director

# Section X - Contract Forms

## Table of Forms

**Notification of Intention to Award** ..... **169**
**Letter of Acceptance** ..... **175**
**Contract Agreement** ..... **176**
**Performance Security** ..... **178**
**Environmental and Social (ES) Performance Security** ..... **180**
**Advance Payment Security** ..... **182**
**Retention Money Security** ..... **184**

Project Director

# Notification of Intention to Award

**[*This Notification of Intention to Award shall be sent to each Bidder that submitted a Bid.*]**

**[*Send this Notification to the Bidder's Authorized Representative named in the Bidder Information Form*]**

For the attention of Bidder's Authorized Representative

Name: *[insert Authorized Representative's name]*

Address: *[insert Authorized Representative's Address]*

Telephone/Fax numbers: *[insert Authorized Representative's telephone/fax numbers]*

Email Address: *[insert Authorized Representative's email address]*

***[IMPORTANT: insert the date that this Notification is transmitted to Bidders. The Notification must be sent to all Bidders simultaneously. This means on the same date and as close to the same time as possible.]***

**DATE OF TRANSMISSION**: This Notification is sent by: [*email/fax*] on [*date*] (local time)

# Notification of Intention to Award

**Employer:** *[insert the name of the Employer]*
**Project:** *[insert name of project]*
**Contract title:** *[insert the name of the contract]*
**Country:** *[insert country where RFB is issued]*
**Loan No. /Credit No. / Grant No.:** *[insert reference number for loan/credit/grant]*
**RFB No:** *[insert RFB reference number from Procurement Plan]*

This Notification of Intention to Award (Notification) notifies you of our decision to award the above contract. The transmission of this Notification begins the Standstill Period. During the Standstill Period you may:

a) request a debriefing in relation to the evaluation of your Bid, and/or

b) submit a Procurement-related Complaint in relation to the decision to award the contract.

**1. The successful Bidder**

| | |
|---|---|
| **Name:** | [*insert name of successful Bidder*] |
| **Address:** | [*insert address of the successful Bidder*] |
| **Contract price:** | [*insert contract price of the successful Bid*] |

Project Director

**2. Other Bidders *[INSTRUCTIONS: insert names of all Bidders that submitted a Bid. If the Bid's price was evaluated include the evaluated price as well as the Bid price as read out.] N/A***

| Name of Bidder | Bid price | Evaluated Bid price (if applicable) |
|---|---|---|
| [*insert name*] | [*insert Bid price*] | [*insert evaluated price*] |
| [*insert name*] | [*insert Bid price*] | [*insert evaluated price*] |
| [*insert name*] | [*insert Bid price*] | [*insert evaluated price*] |
| [*insert name*] | [*insert Bid price*] | [*insert evaluated price*] |
| [*insert name*] | [*insert Bid price*] | [*insert evaluated price*] |

**3. Reason/s why your Bid was unsuccessful**

***[INSTRUCTIONS: State the reason/s why this Bidder's Bid was unsuccessful. Do NOT include: (a) a point by point comparison with another Bidder's Bid or (b) information that is marked confidential by the Bidder in its Bid.]***

**4. How to request a debriefing**

**DEADLINE: The deadline to request a debriefing expires at midnight on [*insert date*] (local time).**

You may request a debriefing in relation to the results of the evaluation of your Bid. If you decide to request a debriefing your written request must be made within three (3) Business Days of receipt of this Notification of Intention to Award.

Provide the contract name, reference number, name of the Bidder, contact details; and address the request for debriefing as follows:

**Attention**: Mr Ram Hari Pokharel

**Title/position**: Projec Director

**Agency: Department of Roads, Development Cooperation Implementation Division, Strategic Road Connectivity and Trade Improvement Project**

**Email address**: dorfcb@dor.gov.np

If your request for a debriefing is received within the 3 Business Days deadline, we will provide the debriefing within five (5) Business Days of receipt of your request. If we are unable to provide the debriefing within this period, the Standstill Period shall be extended by five (5) Business Days after the date that the debriefing is provided. If this happens, we will notify you and confirm the date that the extended Standstill Period will end.

Project Director

The debriefing may be in writing, by phone, video conference call or in person. We shall promptly advise you in writing how the debriefing will take place and confirm the date and time.

If the deadline to request a debriefing has expired, you may still request a debriefing. In this case, we will provide the debriefing as soon as practicable, and normally no later than fifteen (15) Business Days from the date of publication of the Contract Award Notice.

## 5. How to make a complaint

**Period: Procurement-related Complaint challenging the decision to award shall be submitted by midnight, [*insert date*] (local time).**

Provide the contract name, reference number, name of the Bidder, contact details; and address the Procurement-related Complaint as follows:

**Attention**: Mr Ram Hari Pokharel

**Title/position**: Projec Director

**Agency: Department of Roads, Development Cooperation Implementation Division, Strategic Road Connectivity and Trade Improvement Project**

**Email address**: dorfcb@dor.gov.np

At this point in the procurement process, you may submit a Procurement-related Complaint challenging the decision to award the contract. You do not need to have requested, or received, a debriefing before making this complaint. Your complaint must be submitted within the Standstill Period and received by us before the Standstill Period ends.

Further information:

For more information see the Procurement Regulations for IPF Borrowers (Procurement Regulations)[https://policies.worldbank.org/sites/ppf3/PPFDocuments/Forms/DispPage.aspx?docid=4005] (Annex III). You should read these provisions before preparing and submitting your complaint. In addition, the World Bank's Guidance "How to make a Procurement-related Complaint" [http://www.worldbank.org/en/projects-operations/products-and-services/brief/procurement-new-framework#framework] provides a useful explanation of the process, as well as a sample letter of complaint.

In summary, there are four essential requirements:

1. You must be an 'interested party'. In this case, that means a Bidder who submitted a Bid in this bidding process, and is the recipient of a Notification of Intention to Award.
2. The complaint can only challenge the decision to award the contract.
3. You must submit the complaint within the period stated above.
4. You must include, in your complaint, all of the information required by the Procurement Regulations (as described in Annex III).

Project Director

**6. Standstill Period**

**DEADLINE: The Standstill Period is due to end at midnight on [*insert date*] (local time).**

The Standstill Period lasts ten (10) Business Days after the date of transmission of this Notification of Intention to Award.

The Standstill Period may be extended as stated in Section 4 above.

If you have any questions regarding this Notification please do not hesitate to contact us.

On behalf of the Employer:

**Signature:** _____

**Name:** _____

**Title/position:** _____

**Telephone:** _____

**Email:** _____

Project Director

# Beneficial Ownership Disclosure Form

*INSTRUCTIONS TO BIDDERS: DELETE THIS BOX ONCE YOU HAVE COMPLETED THE FORM*

*This Beneficial Ownership Disclosure Form ("Form") is to be completed by the successful Bidder. In case of joint venture, the Bidder must submit a separate Form for each member. The beneficial ownership information to be submitted in this Form shall be current as of the date of its submission.*

*For the purposes of this Form, a Beneficial Owner of a Bidder is any natural person who ultimately owns or controls the Bidder by meeting one or more of the following conditions:*

- *directly or indirectly holding 25% or more of the shares*
- *directly or indirectly holding 25% or more of the voting rights*
- *directly or indirectly having the right to appoint a majority of the board of directors or equivalent governing body of the Bidder*

**RFB No.:** SRCTIP –DOR-W-NNM-ICB-1
**Request for Bid No**.: [*insert identification*]

To: **[*insert complete name of Employer*]**

In response to your request in the Letter of Acceptance *dated [insert date of letter of Acceptance]* to furnish additional information on beneficial ownership: *[select one option as applicable and delete the options that are not applicable]*

(i) we hereby provide the following beneficial ownership information.

**Details of beneficial ownership**

| Identity of Beneficial Owner | Directly or indirectly holding 25% or more of the shares (Yes / No) | Directly or indirectly holding 25 % or more of the Voting Rights (Yes / No) | Directly or indirectly having the right to appoint a majority of the board of the directors or an equivalent governing body of the Bidder (Yes / No) |
|---|---|---|---|
| *[include full name (last, middle, first), nationality, country of residence]* | | | |

Project Director

***OR***

(ii) *We declare that there is no Beneficial Owner meeting one or more of the following conditions:*

- directly or indirectly holding 25% or more of the shares
- directly or indirectly holding 25% or more of the voting rights
- directly or indirectly having the right to appoint a majority of the board of directors or equivalent governing body of the Bidder

**OR**

*(iii) We declare that we are unable to identify any Beneficial Owner meeting one or more of the following conditions. [If this option is selected, the Bidder shall provide explanation on why it is unable to identify any Beneficial Owner]*

- directly or indirectly holding 25% or more of the shares
- directly or indirectly holding 25% or more of the voting rights
- directly or indirectly having the right to appoint a majority of the board of directors or equivalent governing body of the Bidder]"

**Name of the Bidder**: *[*insert complete name of the Bidder*]_____

**Name of the person duly authorized to sign the Bid on behalf of the Bidder**: **[*insert complete name of person duly authorized to sign the Bid*]_____

**Title of the person signing the Bid**: [*insert complete title of the person signing the Bid*]_____

**Signature of the person named above**: [*insert signature of person whose name and capacity are shown above*]_____

**Date signed** [*insert date of signing*] **day of** [*insert month*], [*insert year*]_____

* In the case of the Bid submitted by a Joint Venture specify the name of the Joint Venture as Bidder. In the event that the Bidder is a joint venture, each reference to "Bidder" in the Beneficial Ownership Disclosure Form (including this Introduction thereto) shall be read to refer to the joint venture member.

** Person signing the Bid shall have the power of attorney given by the Bidder. The power of attorney shall be attached with the Bid Schedules.

Project Director

# Letter of Acceptance

*[letterhead paper of the Employer]*

*[date]*

To: *[name and address of the Contractor]*

This is to notify you that your Bid dated *[date]* for execution of the *[name of the Contract and identification number, as given in the Contract Data]* for the Accepted Contract Amount *[amount in numbers and words] [name of currency]*, as corrected and modified in accordance with the Instructions to Bidders, is hereby accepted by our Agency.

You are requested to furnish (i) the Performance Security and an Environmental and Social Performance Security ***[Delete ES Performance Security if it is not required under the contract*]** within 28 days in accordance with the Conditions of Contract, using for that purpose one of the Performance Security Forms and the ES Performance Security Form, ***[Delete reference to the ES Performance Security Form if it is not required under the contract]*** and (ii) the additional information on beneficial ownership in accordance with BDS ITB 47.1, within eight (8) Business days using the Beneficial Ownership Disclosure Form, included in Section X, Contract Forms, of the bidding document.

Authorized Signature: _____

Name and Title of Signatory: _____

Name of Agency: _____

## Attachment: Contract Agreement

Project Director

# Contract Agreement

THIS AGREEMENT made the _____ day of _____, _____, between _____of _____ (hereinafter "the Employer"), of the one part, and _____ of _____ (hereinafter "the Contractor"), of the other part:

WHEREAS the Employer desires that the Works known as _____ should be executed by the Contractor, and has accepted a Bid by the Contractor for the execution and completion of these Works and the remedying of any defects therein,

The Employer and the Contractor agree as follows:

1. In this Agreement words and expressions shall have the same meanings as are respectively assigned to them in the Contract documents referred to.

2. The following documents shall be deemed to form and be read and construed as part of this Agreement. This Agreement shall prevail over all other Contract documents.

(a) the Letter of Acceptance;

(b) the Letter of Bid;

(c) the addenda Nos _____(if any);

(d) the Particular Conditions;

(e) the General Conditions;

(f) the Specification;

(g) the Drawings; and

(h) the completed Schedules and any other documents forming part of the contract, including, but not limited to:

**i.** the ES Management Strategies and Implementation Plans; and

ii. Code of Conduct for Contractor's Personnel (ES).

3. In consideration of the payments to be made by the Employer to the Contractor as specified in this Agreement, the Contractor hereby covenants with the Employer to execute the Works and to remedy defects therein in conformity in all respects with the provisions of the Contract.

Project Director

4. The Employer hereby covenants to pay the Contractor in consideration of the execution and completion of the Works and the remedying of defects therein, the Contract Price or such other sum as may become payable under the provisions of the Contract at the times and in the manner prescribed by the Contract.

IN WITNESS whereof the parties hereto have caused this Agreement to be executed in accordance with the laws of _____ on the day, month and year specified above.

Signed by _____ (for the Employer)

Signed by _____ (for the Contractor)

Project Director

# Performance Security

## Option 1: Demand Guarantee

*[Guarantor letterhead or SWIFT identifier code]*

**Beneficiary:** *[insert name and Address of* Employer*]*

**Date:** _ *[Insert date of issue]*

**PERFORMANCE GUARANTEE No.:** *[Insert guarantee reference number]*

**Guarantor:** *[Insert name and address of place of issue, unless indicated in the letterhead]*

We have been informed that _____ (hereinafter called "the Applicant") has entered into Contract No. _____ dated _____ with the Beneficiary, for the execution of _____ (hereinafter called "the Contract").

Furthermore, we understand that, according to the conditions of the Contract, a performance guarantee is required.

At the request of the Applicant, we as Guarantor, hereby irrevocably undertake to pay the Beneficiary any sum or sums not exceeding in total an amount of _____ (_____),[1] such sum being payable in the types and proportions of currencies in which the Contract Price is payable, upon receipt by us of the Beneficiary's complying demand supported by the Beneficiary's statement, whether in the demand itself or in a separate signed document accompanying or identifying the demand, stating that the Applicant is in breach of its obligation(s) under the Contract, without the Beneficiary needing to prove or to show grounds for your demand or the sum specified therein.

This guarantee shall expire, no later than the …. Day of ……, … [2], and any demand for payment under it must be received by us at this office indicated above on or before that date.

---

[1] *The Guarantor shall insert an amount representing the percentage of the Accepted Contract Amount specified in the Letter of Acceptance, less provisional sums, if any, and denominated either in the currency(cies) of the Contract or a freely convertible currency acceptable to the Beneficiary.*

[2] *Insert the date twenty-eight days after the expected completion date as described in GC Clause 11.9. The Employer should note that in the event of an extension of this date for completion of the Contract, the Employer would need to request an extension of this guarantee from the Guarantor. Such request must be in writing and must be made prior to the expiration date established in the guarantee. In preparing this guarantee, the*

Project Director

This guarantee is subject to the Uniform Rules for Demand Guarantees (URDG) 2010 Revision, ICC Publication No. 758, except that the supporting statement under Article 15(a) is hereby excluded.

_____

*[signature(s)]*

***Note: All italicized text (including footnotes) is for use in preparing this form and shall be deleted from the final product.***

---

*Employer might consider adding the following text to the form, at the end of the penultimate paragraph: "The Guarantor agrees to a one-time extension of this guarantee for a period not to exceed [six months][one year], in response to the Beneficiary's written request for such extension, such request to be presented to the Guarantor before the expiry of the guarantee."*

Project Director

# Environmental and Social (ES) Performance Security

## ES Demand Guarantee

*[Guarantor letterhead or SWIFT identifier code]*

**Beneficiary:** *[insert name and Address of* Employer*]*

**Date:** _ *[Insert date of issue]*

**ES PERFORMANCE GUARANTEE No.:** *[Insert guarantee reference number]*

**Guarantor:** *[Insert name and address of place of issue, unless indicated in the letterhead]*

We have been informed that _____ (hereinafter called "the Applicant") has entered into Contract No. _____ dated _____ with the Beneficiary, for the execution of _____ (hereinafter called "the Contract").

Furthermore, we understand that, according to the conditions of the Contract, a performance guarantee is required.

At the request of the Applicant, we as Guarantor, hereby irrevocably undertake to pay the Beneficiary any sum or sums not exceeding in total an amount of _____ (_____),[1] such sum being payable in the types and proportions of currencies in which the Contract Price is payable, upon receipt by us of the Beneficiary's complying demand supported by the Beneficiary's statement, whether in the demand itself or in a separate signed document accompanying or identifying the demand, stating that the Applicant is in breach of its Environmental and Social (ES) obligation(s) under the Contract, without the Beneficiary needing to prove or to show grounds for your demand or the sum specified therein.

This guarantee shall expire, no later than the …. Day of ……, 2… [2], and any demand for payment under it must be received by us at this office indicated above on or before that date.

---

[1] *The Guarantor shall insert an amount representing the percentage of the Accepted Contract Amount specified in the Letter of Acceptance, less provisional sums, if any, and denominated either in the currency (cies) of the Contract or a freely convertible currency acceptable to the Beneficiary.*

[2] *Insert the date twenty-eight days after the expected completion date as described in GC Clause 11.9. The Employer should note that in the event of an extension of this date for completion of the Contract, the Employer would need to request an extension of this guarantee from the Guarantor. Such request must be in writing and must be made prior to the expiration date established in the guarantee. In preparing this guarantee, the Employer*

Project Director

This guarantee is subject to the Uniform Rules for Demand Guarantees (URDG) 2010 Revision, ICC Publication No. 758, except that the supporting statement under Article 15(a) is hereby excluded.

_____

*[signature(s)]*

***Note: All italicized text (including footnotes) is for use in preparing this form and shall be deleted from the final product.***

---

*might consider adding the following text to the form, at the end of the penultimate paragraph: "The Guarantor agrees to a one-time extension of this guarantee for a period not to exceed [six months] [one year], in response to the Beneficiary's written request for such extension, such request to be presented to the Guarantor before the expiry of the guarantee."*

Project Director

# Advance Payment Security
## Demand Guarantee

*[Guarantor letterhead or SWIFT identifier code]*

**Beneficiary:** *[Insert name and Address of* Employer*]*

**Date:** *[Insert date of issue]*

**ADVANCE PAYMENT GUARANTEE No.:** *[Insert guarantee reference number]*

**Guarantor:** *[Insert name and address of place of issue, unless indicated in the letterhead]*

We have been informed that _____ (hereinafter called "the Applicant") has entered into Contract No. _____ dated _____ with the Beneficiary, for the execution of _____ (hereinafter called "the Contract").

Furthermore, we understand that, according to the conditions of the Contract, an advance payment in the sum _____ (_____) is to be made against an advance payment guarantee.

At the request of the Applicant, we as Guarantor, hereby irrevocably undertake to pay the Beneficiary any sum or sums not exceeding in total an amount of _____ (_____) [1] upon receipt by us of the Beneficiary's complying demand supported by the Beneficiary's statement, whether in the demand itself or in a separate signed document accompanying or identifying the demand, stating either that the Applicant:

(a) has used the advance payment for purposes other than the costs of mobilization in respect of the Works; or

(b) has failed to repay the advance payment in accordance with the Contract conditions, specifying the amount which the Applicant has failed to repay.

---

[1] *The Guarantor shall insert an amount representing the amount of the advance payment and denominated either in the currency(ies) of the advance payment as specified in the Contract, or in a freely convertible currency acceptable to the Employer.*

A demand under this guarantee may be presented as from the presentation to the Guarantor of a certificate from the Beneficiary's bank stating that the advance payment referred to above has been credited to the Applicant on its account number _____ at _____.

The maximum amount of this guarantee shall be progressively reduced by the amount of the advance payment repaid by the Applicant as specified in copies of interim statements or payment certificates which shall be presented to us. This guarantee shall expire, at the latest, upon our receipt of a copy of the interim payment certificate indicating that ninety (90) percent of the Accepted Contract Amount, less provisional sums, has been certified for payment, or on the ___ day of _____, 2___,[2] whichever is earlier. Consequently, any demand for payment under this guarantee must be received by us at this office on or before that date.

This guarantee is subject to the Uniform Rules for Demand Guarantees (URDG) 2010 Revision, ICC Publication No. 758, except that the supporting statement under Article 15(a) is hereby excluded.

_____

*[signature(s)]*

***Note: All italicized text (including footnotes) is for use in preparing this form and shall be deleted from the final product.***

[2] *Insert the expected expiration date of the Time for Completion. The Employer should note that in the event of an extension of the time for completion of the Contract, the Employer would need to request an extension of this guarantee from the Guarantor. Such request must be in writing and must be made prior to the expiration date established in the guarantee. In preparing this guarantee, the Employer might consider adding the following text to the form, at the end of the penultimate paragraph: "The Guarantor agrees to a one-time extension of this guarantee for a period not to exceed [six months][one year], in response to the Beneficiary's written request for such extension, such request to be presented to the Guarantor before the expiry of the guarantee."*

Project Director

# Retention Money Security

## Demand Guarantee

_____ *[Guarantor letterhead or SWIFT identifier code]*

**Beneficiary:** _____ *[Insert name and Address of* Employer*]*

**Date:** _____*[Insert date of issue]*

**RETENTION MONEY GUARANTEE No.:** *[Insert guarantee reference number]*

**Guarantor:** *[Insert name and address of place of issue, unless indicated in the letterhead]*

We have been informed that _____ *[insert name of Contractor, which in the case of a joint venture shall be the name of the joint venture]* (hereinafter called "the Applicant") has entered into Contract No. _____ *[insert reference number of the contract]* dated _____ with the Beneficiary, for the execution of _____ *[insert name of contract and brief description of* Works*]* (hereinafter called "the Contract").

Furthermore, we understand that, according to the conditions of the Contract, the Beneficiary retains moneys up to the limit set forth in the Contract ("the Retention Money"), and that when the Taking-Over Certificate has been issued under the Contract and the first half of the Retention Money has been certified for payment, payment of *[*insert the second half of the Retention Money *or if the amount guaranteed under the Performance Guarantee when the Taking-Over Certificate is issued is less than half of the Retention Money,* the difference between half of the Retention Money and the amount guaranteed under the Performance Security and, if required the ES Performance Security*]* is to be made against a Retention Money guarantee.

At the request of the Applicant, we, as Guarantor, hereby irrevocably undertake to pay the Beneficiary any sum or sums not exceeding in total an amount of _____ *[insert amount in figures]* (_____) *[amount in words]*[1] upon receipt by us of the Beneficiary's complying demand supported by the Beneficiary's statement, whether in the demand itself or in a separate signed document accompanying or identifying the demand, stating that the Applicant is in breach of its

[1] *The Guarantor shall insert an amount representing the amount of the second half of the Retention Money or if the amount guaranteed under the Performance Guarantee when the Taking-Over Certificate is issued is less than half of the Retention Money, the difference between half of the Retention Money and the amount guaranteed under the Performance Security and denominated either in the currency(ies) of the second half of the Retention Money as specified in the Contract, or in a freely convertible currency acceptable to the Beneficiary.*

Project Director

obligation(s) under the Contract, without your needing to prove or show grounds for your demand or the sum specified therein.

A demand under this guarantee may be presented as from the presentation to the Guarantor of a certificate from the Beneficiary's bank stating that the second half of the Retention Money as referred to above has been credited to the Applicant on its account number _____ at _____ *[insert name and address of Applicant's bank]*.

This guarantee shall expire no later than the …. day of ……, 2… [2], and any demand for payment under it must be received by us at the office indicated above on or before that date.

This guarantee is subject to the Uniform Rules for Demand Guarantees (URDG) 2010 Revision, ICC Publication No. 758, except that the supporting statement under Article 15(a) is hereby excluded.

_____

*[signature(s)]*

***Note: All italicized text (including footnotes) is for use in preparing this form and shall be deleted from the final product.***

[2] *Insert the same expiry date as set forth in the Performance Security, representing the date twenty-eight days after the completion date described in GC Clause 11.9. The Employer should note that in the event of an extension of this date for completion of the Contract, the Employer would need to request an extension of this guarantee from the Guarantor. Such request must be in writing and must be made prior to the expiration date established in the guarantee. In preparing this guarantee, the Employer might consider adding the following text to the form, at the end of the penultimate paragraph: "The Guarantor agrees to a one-time extension of this guarantee for a period not to exceed [six months][one year], in response to the Beneficiary's written request for such extension, such request to be presented to the Guarantor before the expiry of the guarantee."*

Project Director

Project Director

Government of Nepal

Ministry of Physical Infrastructure and Transport Department of Roads

Department of Roads

**Strategic Road Connectivity and Trade Improvement Project**

Kathmandu, Nepal

# BIDDING DOCUMENTS

International Competitive Bidding (ICB)

CONSTRUCTION AND IMPROVEMENT OF NAGDHUNGA-NAUBISE ROAD SECTION (Km 0+000 to 12+263)

Contract No. SRCTIP-DoR-W-NNM-ICB-1

Phase 1: Improvement/Construction Works

Phase 2: Performance Based Maintenance Works

## Part II: Section VII Work Requirements

**Section VII (a.1) Standard Specifications**
**Section VII (a.2) Special Specifications**
**Appendices to special provisions**

**August, 2021**

Project Director

**Section VII: Works Requirement**

**Section VII (a): Specifications**

## (a.1) Standard Specifications

Standard specifications for this contract shall be the "Standard Specifications for Road and Bridge Works (2073 BS / 2017 AD)" with amendment 2075 issued under the authority of Government of Nepal, Ministry of Physical Infrastructure and Transport, Department of Roads.

The document can be downloaded from *www.dor.gov.np*

**Section VII: Works Requirement**

**Section VII (a): Specifications**

## (a.2) Special Specifications

The Standard Specifications for Road and Bridge Works issued by Government of Nepal, Ministry of Physical Infrastructure and Transport, Department of Roads together with these Special Specifications shall be used to specify the construction of the Works.

The Special Specifications contained herein shall be read in conjunction with the Standard Specifications and shall supplement, replace or supersede the Standard Specifications as appropriate. Where there is any ambiguity or discrepancy between the Standard Specifications and the Special Specifications, the Special Specifications shall have preference and shall govern.

## Section 100 GENERAL

### 104 ACCOMMODATION OF TRAFFIC

(2) General Requirements

Delete second paragraph of Section (2) and replace with the following:

Kathmandu - Nagdunga – Naubise is the only major highway section which accommodates all types of commercial vehicles and connects the capital city of Nepal, Kathmandu with other parts of the country. So this road cannot be fully closed for traffic for long duration. Contractor shall prepare the work programme keeping in view of this situation and adequate provision of traffic management has to be considered in the proposal.
The contractor shall always keep one lane open to traffic throughout the construction. Under exceptional circumstances, when full closure of traffic lanes cannot be avoided for certain operation of construction, the Contractor shall inform the Employer and the Engineer and submit proposal for road closure and traffic management, indicating time period and work program. The Engineer will review the proposal and if satisfied, may allow to close the particular section of the road with the approval of the Employer, for a period of maximum of 30 minutes at a time
Time and period of such closure shall be as agreed with the local government authorities and Employer. For this the contractor shall submit the proposal for road closure indicating time, period and work programme for the closure time, when the work cannot be executed without road closure for safety reason. Contractor will be fully responsible to manage the construction work during such difficult situation.

**(3) Temporary Diversions**

Add the following at the end of the sub-clause 104 (3) (j) Removal of Diversions:

This work shall include the establishment and maintenance for at least one year of suitable replacement vegetation to ensure full rehabilitation and protection of the disturbed area.

**(4) Accommodation of Traffic Where Road is Constructed in Half Widths**

Delete the second sentence of the first paragraph of Section (4) Accommodation of Traffic where Road is Constructed in Half Widths and replace with:

The maximum length of one-way working shall be 500 meters. This length may further be reduced if visibility is reduced at bends and traffic delays are excessive. All sections of half width working shall be controlled by traffic lights, stop/go boards or flagmen throughout the period of half width working. Normally in this half width section only one way traffic could be allowed. Communication from one end to other end of the one-way working section shall be maintained. The contractor shall provide sufficient flag persons, traffic regulating persons, equipment etc. as required to regulate the flow of traffic to acceptable level..

During the drilling and blasting of the rocky material one full lane of minimum 3.7 m shall be kept open to traffic at all time by erecting steel plate barriers as per the drawings. Length of such working section shall not exceed 100 m.

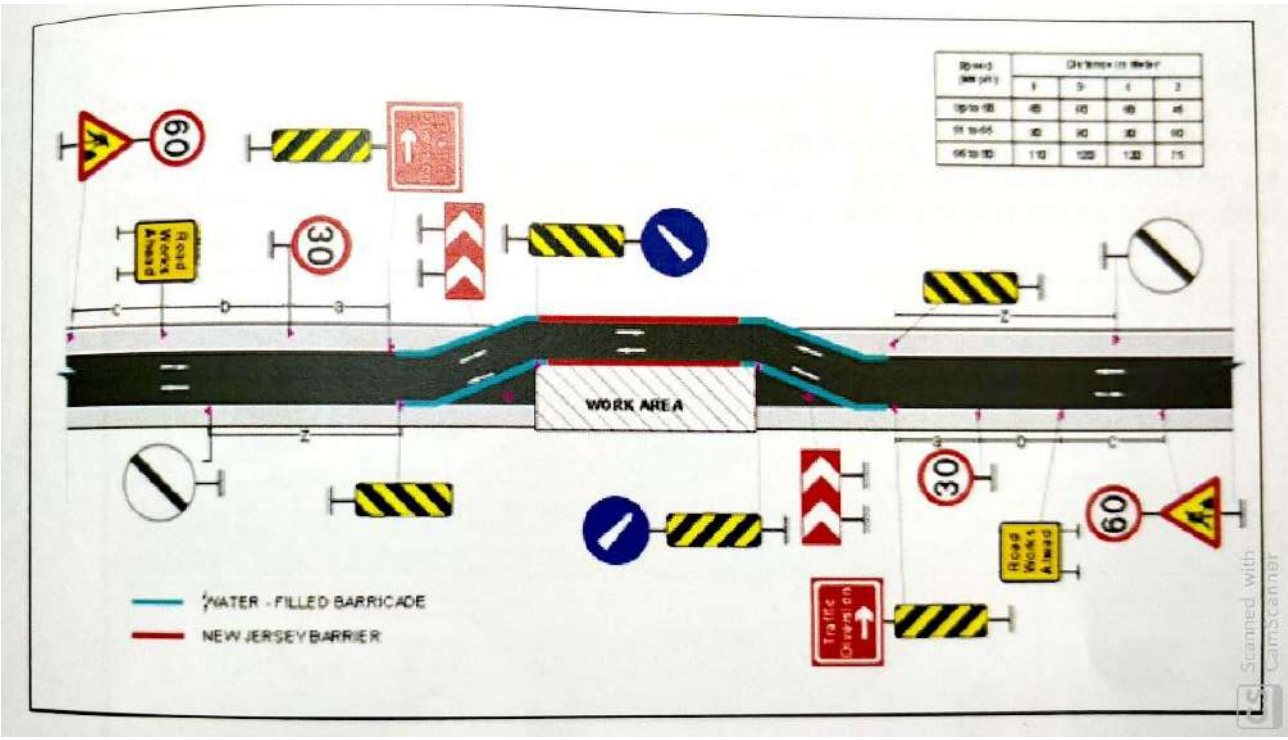


*Typical layout for traffic control/management during construction*

<u>Delete the fourth paragraph and substitute the following:</u>

The Contractor shall provide and maintain for the period of construction, traffic control and safety devices including Traffic Signs, Barricade Boards, Traffic Cones, New Jersey Barrier, Lighting Devices etc., at all locations where work is in progress in accordance with "Safety at Road Works" chapter of Traffic Sign Manual of Department of Roads and the above typical layout. Night time working areas shall be fully illuminated.

Material and equipment temporarily stored on, or adjacent to, the existing roadway shall be so placed, and the work at all times, shall be so conducted as to cause minimum disruption to the travelling public. The rear, front and the sides of the contractor's equipment shall have conspicuity tape or paint. Warning signs and barriers will be required to separate the Contractor's material and equipment from the public.

The Contractor will not be permitted to have excavations open on both sides of the road at a particular chainage such that there is a step adjacent to public traffic which may create a danger to traffic i.e. the excavation and backfilling with sub-base or base shall be flush with the existing road level on one side before excavation can proceed on the other side of the road.

During construction for operations which require one way traffic the Contractor shall be responsible for the removal of broken down vehicles including vehicles damaged in accidents and shall maintain one way uninterrupted traffic flow at all times (except at those times as agreed with the Engineer where it is necessary to temporarily close the road). For this purpose the Contractor shall provide a crane mounted truck with operator for full duration of the works for stowaway toeing of any broken down or damaged vehicle from site. Contractor may use the equipment for other purposes when no vehicle removal is required.

The Contractor shall programme his work so as to reduce disruption to road users during construction of the Works and maintain traffic control measures for the safety of traffic at all times. To assist with compliance of this requirement the Contractor will be restricted in use of single lane traffic working as described below.

Within any 5 kilometer section of the Site the length of road available to the Contractor for major pavement construction at any one time involving single lane traffic control shall be restricted to 2 separate sections of 500 meter length each provided that the sections are separated by a minimum of 2 km of unobstructed road with two lane traffic working.

The Contractor shall not be permitted to work outside these 500 meter lengths (except on a separate 5 km. section) unless otherwise agreed by the Engineer until the full width of the road is again open to traffic.

The Contractor shall provide with his time/location programme and detailed construction schedule, a list of proposed 500 meter lengths with chainage location showing where he intends to commence his pavement construction. The Engineer shall approve these locations without undue delay subject to compliance with this Clause and the Contractor will then be given access to these sections. Subsequent sections shall be requested and the Engineer shall approve them in accordance with the above procedure.

Other works such as extension to culverts or works which may be carried out without disruption to traffic, either vehicular or pedestrian, may be undertaken in a properly programmed manner outside these limits with prior approval from the Engineer.

The Contractor shall ensure that sufficient labour, equipment and material is available in approved stockpiles for the completion of any 500 m half-width section under construction.

Before any subsequent 500 meter section is made available to the Contractor, the Contractor shall demonstrate that he has sufficient labour, equipment and material available in approved stockpiles to progress the Works. If in the opinion of the Engineer, this is not demonstrated the Contractor shall not be permitted to start work on the subsequent section.

The Contractor may propose alternative working procedures which will be subject to the Engineer's approval before implementation.

Except as is allowed for in the above no traffic other than construction traffic shall be allowed on any earthwork or pavement layer until a surfacing has been applied either as a sanded prime or single surface treatment. The approval of the Engineer shall be required before traffic is allowed to pass over newly constructed road. Any defects caused by traffic passing over the construction layers shall be remedied in accordance with these Specifications.

The Contractor shall be fully responsible for traffic control.

(5) Traffic Safety and Control

<u>Add new para at the end of Sub-clause 5 as follows:</u>
The contractor shall be responsible for traffic control in such a manner that no major traffic jam will be observed at site during construction period.

**Traffic Control Zone**

The construction zone describes that area of the road which is affected by the works and which affects traffic flow and road users. The main area of interest can be called in this context as the "Traffic Control Zone". It includes all those areas of carriageway in advance of the actual work site which are required for advanced warning of the hazard as well as safety zones, the transition zones and the working zone itself. These elements are shown in Fig .1 and defined in succeeding para.
The problem at many construction zones is accentuated by the availability of only an undivided carriageway, which may involve problems of the sharing of the limited remaining road space

by road users under some form of traffic control. In any case it should be ensured that road users is properly segregated from the working zones.
The Traffic Control Zone can be divided into three components, that is, the Advance Warming Zone, the Transition Zone, and Working Zone. All construction zones will have a working zone, which is flanked, by a transition zone for each direction of approaching traffic and an advance warming zone will precede these in turn.

**Advance Warning Zone**

The “Advance Warning Zone”, is the area to warn the road user of the approaching hazard and to prepare them for the change in driving conditions. It is essential for traffic control in the construction zone. It should provide information on:

(i) The presence of the hazard through the “road Works Ahead” sign, accompanied by the distance to the hazard;

(ii) Any changes affecting traffic arrangements (such as reduction in the number of lanes and/or in the speed limit) within the traffic control zone;

(iii) Extent of the hazard (for example; the length of restriction); and for general information;

(iv) The type of hazard

(v) Sign for reduction of speed of vehicles

The information in this zone is conveyed through a series of traffic signs along the length of the zone.

**Approach Transition Zone**

The transition zone is the area in which the traffic is guided into the altered traffic flow pattern around the working zone. This is one of the most crucial zones as far as safety aspects are concerned because most of the movements involved are merging/ turning movements. The transition zone has two components: the Approach Transition Zone and Terminal Transition Zone.

**Working Zone**

The working zone is where the actual construction is being undertaken. It contains the work area and a working space, as well as lateral and longitudinal buffer zones to create the safety zone to protect both the workforce from wayward vehicles entering the area of actual work and the road users from construction equipment.

**Terminal Transition Zone**

The terminal transition zone (TTZ) provides a short distance to clear the work area and to return to normal traffic lanes. It extends from downstream end of the work area to the sign indication the end of works.

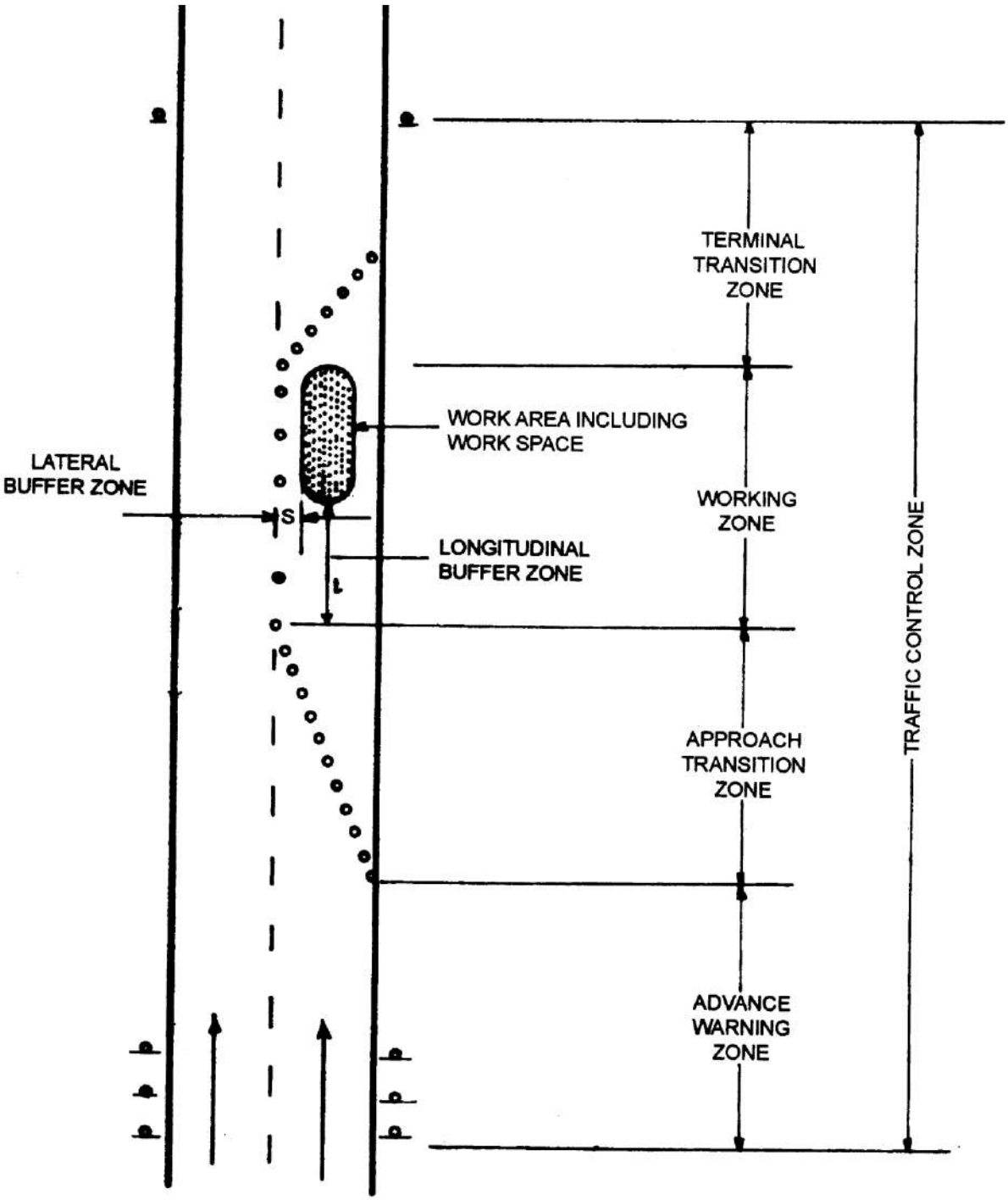


**Fig.1 Typical Traffic Control Zone**

Length of advance warning zone shall be at-least 100 m away. Length of approach Transition Zone is 50 m.

<u>Add new Section (6) Coordination with local government authorities and district traffic police offices after Section (5) as follows:</u>

**(6) Coordination with local government authorities and District Traffic Police**

The contractor shall keep close coordination with local government offices such as CDO, Rural and City Municipalities and District Traffic Police Offices, while carrying out the daily traffic management activities for smooth traffic flow within the project road. PIC Office will provide necessary assistance for coordinating with government agencies.

Read Sub-clause (6) Measurement and Payment as Sub-clause (7) Measurement and Payment

**(7) Measurement and payment**

Delete the sub-clause (6) and replace with the following

Management of Traffic shall be measured in Kilometer of the length of work zone of main road irrespective of lane. No separate measurement shall be done for different widths or different activities within a road section.

**Payment**

Payment for above measured quantities shall be made as per unit rate provided in the contract. 50% of the payment shall be done on completion of measured length of sub-base course of main road and rest 50% when all the required activities with in the full width of the road section are completed. No other separate payment shall be made for the activities mentioned above and other required activities for smooth movement of traffic throughout the construction period.

## 105 PUBLICLY AND PRIVATELY OWNED SERVICES

Delete the whole contents of Sub clause (7) and substitute with:

The Contractor shall ascertain the location of all access paths, watercourses, irrigation channels, sewers, drains, water pipes, electricity and telecommunication cables and other services and structures which may be encountered during the execution of the works. He shall temporarily support or divert and subsequently reinstate all such services and structures as necessary and to the satisfaction of the Engineer. As soon as any such service or structure is encountered on, over, under, in or through the Site during the performance of the Contract, the contractor shall make a record of the location and description of such service or structure and shall send the same forthwith to the Engineer.

Where permanent diversion or support of such service or structure is rendered necessary as an unavoidable result of the execution and maintenance of the Works in accordance with the Contract, the Engineer after consultation with the Employer will instruct the Contractor as to the diversion or support to be provided. All operations necessary for the execution of the Works shall be carried out so as not to interfere unnecessarily or improperly with the convenience of the public, or the access to, use and occupation of public or private roads and footpaths or of properties whether in the possession of the Government or any other person.

Add new sub clause (8):

(8) No separate measurement and payment shall be made for the work of temporarily supporting, protecting, diverting and subsequently reinstating the publicly and privately owned services. But measurement and payment shall be made for the construction of permanent new structures/services in lieu of existing structures/services and removal or shifting of services/utilities after getting approval from the Engineer.

## 106 SURVEY AND SETTING OUT

Add the following to Sub-Clause (5):

"If at any time the contractor believes that there exists a discrepancy between the location of the works as defined by the setting out and the apparent location of the works as shown in the plans he shall immediately inform the Engineer and request clarification."

Delete the Sub-Clause (6) and substitute the following:

"Some survey data of the project site is held by the Engineer and this survey data will be made available to the contractor in digital format. But the existing profile and cross sections shall be checked against the survey data by the contractor and, should any changes be found necessary in the Survey Traverse Points and Bench Marks, after the procedures required in Sub-Clauses
**(1)** and (2) above, the existing data set shall be amended accordingly. Should the Engineer consider that design modifications of the center line and/or gradient is relevant or if the contractor find that the existing survey data set is inadequate or inaccurate in any area of the works, the Engineer shall issue detailed instructions to the contractor and the contractor shall perform the necessary modifications in the field, as required, and modify the cross sections accordingly.

The final survey data set so obtained in combination with the final horizontal and vertical alignment of the road shall form the basis for the measurements and payments of earthworks. Measurement shall be either based on a Digital Terrain Model generated from the agreed survey data set with the final designed road horizontal and vertical alignment and road cross section, including any widening and super elevation, applied or any other method approved by the Engineer. In case of DTM, the model will be used to generate cross-sections complete with cut and fill data at intervals not exceeding 2.50 meters in the hill areas. Measurement of volumes and areas of earthworks items shall be derived from these cross sections.

The software currently used for the preparation of survey and design data is SW-Roads developed by Softwel (P) Ltd. of Kathmandu Nepal. Should the contractor wish to use alternative software he may propose this to the Engineer. He will be required to demonstrate that his proposed alternative is at least as accurate as and is functionally equivalent in all respects to SW-Roads. Should the Engineer agree to the use of the alternative software, the contractor shall be entirely responsible for the adaptation of all input data, under the supervision of the Engineer, to the alternative software requirements and for the training of the Engineer's personnel in the use of the alternative software. In the event that alternative software is approved, the contractor shall supply the Engineer with two, fully licensed, copies of the alternative for the exclusive use of the Engineer.

Delete paragraph (c) of Sub-Clause (9).

## 108 DIVERSION BRIDGES

In the first line of sub-clause (1) delete the words "as required by the contract" and substitute: "wherever required for the execution of the Works to maintain traffic"

Delete the second and third sentences of sub-clause 3.

Delete the wording of sub-clause (4) in its entirety and substitute:

"No separate measurement and/or payment shall be made for the work required under this clause. All costs in connection with the work specified herein shall be considered included in the related items of work provided in the Bills of Quantities."

## 109 MAINTENANCE OF THE ROAD

Delete the fourth paragraph of sub-clause 109(1) and substitute:

The Contractor shall perform the maintenance works as often as required to keep the carriageway, shoulders, adjoining structures and roadside slopes stable and in proper working order to the satisfaction of the Engineer. The Contractor shall strictly adhere to the stipulations of the latest publication of the document "Road Maintenance Manual" published by the Department of Roads.

In the Road stretches where works supervisors and length workers are being engaged by the Department of Roads for the routine maintenance of the Road, the Contractor shall have to engage them under the same terms and conditions regarding the wages and other facilities during Phase1 (Improvement/Construction Phase) and phase2 (Performance and Maintenance Phase). However, if their performance of the works is not to the satisfaction, the Contractor will have the option to replace them.

The Term and Conditions of Supervisors and Lenthworkers engaged by Department of Roads is given in Annex 6.

**(2) Measurement and Payment**

Delete the wording of sub-clause (2) in its entirety and substitute:

Routine Maintenance of the existing road and bridges during the construction period shall be paid at the contract unit rate per Km-month commencing on the date for the commencement of the works and any extension of time granted pursuant to clause 11.3 of the Conditions of Contract. The contract price and/or unit rate shall be the full and the final compensation to the contractor as per clause 112.

**110 SITE INFORMATION**

Delete the first sentence and replace with the following:

The Contractor shall erect where directed by the Engineer signboards in accordance with the Appendices: Project Signboard.

Add the following:

Project signboards shall be measured as the number of signboards, satisfactorily provided, installed, maintained throughout the Contract period and subsequently removed.

Payment shall be made at the stated unit rate per signboard. The price shall be full compensation for all materials and labour required to perform the work described.

**111 ENVIRONMENTAL PROTECTION WORKS**

Delete the second paragraph and substitute:

The Contractor shall take all precautions for safeguarding the environment during the preparation and execution of the works. He shall abide by all prevailing laws, rules and regulations governing pollution and environmental protection. In particular, the Contractor shall fully comply with the environmental protection mitigation measures specified in the latest version of the project's specific Environment & Social Impact Assessment (ESIA) and Environmental and Social Management Plan (ESMP), as in Appendix 5. If any activity of the Contractor causes damage to the environment in ways not envisaged under project-specific documents, then he shall comply with the measures specified in the latest publication of "Environmental Management Guidelines" published by the Department of Roads or the or WBG Environment Health and Safety (EHS) guideline or as instructed by the Engineers.

The contractor shall fully comply with duties and responsibilities as required to implement the Environmental and Social Management Plan. The contractor is required to go through the Environmental and Social Management Plan provided in Appendix 5 to be aware of obligations and responsibilities required for complying the environment, health and safety requirements under this contract. The cost of adhering and complying with the above requirements is to be included in respective BOQ items and no separate payment shall be made on this account.

Delete the third paragraph and substitute:

The Contractor shall prohibit employees from any use of explosives, poaching of wildlife and cutting of trees or branches. The Contractor shall be responsible for the action of his employees.

**(1) Borrow/Quarry Sites**

Before first paragraph add following:

The contractor shall obtain approval from the Engineer of all material sources before extraction. All sources of materials used under the Contract shall require such approval regardless of whether the material is obtained directly by the Contractor or supplied indirectly by others. The Contractor is not allowed to use the right of way for the borrow pit.

In the first set of bullet points, delete the words “they may be environmentally” in point (iii) and substitute:

“they may lead to general environment degradation or instability problems or may be environmentally unsuitable in any other way”

At the end of sub-clause (1) add the following:

The Contractor shall not deposit excavated material on land in Government or private ownership except where approved by the Engineer in writing or by lease in writing of the authority responsible for such land in Government ownership or of the owner or responsible representative of the owner of such land in private ownership and only then in those places and under such conditions as the authority, owner or responsible representative may prescribe.

Any quarry operated as part of this Contract shall be reinstated and at the end of the Contract left in a stable condition without steep slopes and be either refilled or drained and be landscaped by appropriate planting. Rock or gravel won from a river shall be removed over some distance so as to limit the depth (1m to 1.5 m maximum) of material removed at any one location and not to disrupt the river flow or damage or undermine river banks.

**(2) Disposal of Spoil and Construction Waste**

Insert the following after the existing first paragraph:

Under no circumstances whatsoever shall the Contractor allow spoil from any excavation or cut or scarified asphalt pavement to fall or be pushed down the slope below (Valley side). In any situation where this occurs by accident or by purpose, the Contractor shall, at his own cost, remove the debris to a location approved by the Engineer and make good the affected area through appropriate structures and re-vegetation as specified by the Engineer and following guidelines published in the Department of Roads’ manual "Roadside Bio-Engineering”. Failure in compliance with the Engineer’s instruction in respect of spoil disposal will lead to a reduction or with-holding of payment.

Insert the following after the existing second paragraph:

Any construction waste that includes bitumen products, unused cement, fuel, oil or plastics shall be disposed of in a Government-approved landfill site. If this is not practical then it may be disposed off by burial in a specially excavated pit at a site approved by the Engineer. Land compensation shall be paid by the Contractor for the area occupied by the pit as if for permanent construction. If the land is owned by the Government, then the PIC will facilitate

the Contractor to obtain written permission from the appropriate authority for its use in this manner, and must pay any royalties due. The pit shall be located at least 100 metres from any seasonal or permanent water course or spring. A hole shall be excavated below ground level so that, when the original surface profile is regained through backfilling, the disposed waste is covered by at least two metres of soil. Following the closure of the waste disposal site, the Contractor shall provide any structures necessary to prevent erosion and shall re-vegetate the topsoil with appropriate plants.

**(3) Provision and Maintenance of Camps, Offices, Stores, Equipment Yards and Workshops**

Replace the first paragraph of the sub-clause 111(3) with the following:

The Contractor shall provide and maintain such accommodation and amenities as necessary for all his staff and labour, employed for the purposes of or in connection with the Contract, including all fencing, water supply (both for drinking and other purposes), electricity supply, sanitation, kitchen, fire extinguishers and other requirements in connection with such accommodation or amenities. On completion of the Contract, unless otherwise agreed with the Engineer/Employer, all the temporary camps/housing provided by the Contractor shall be removed and the site(s) reinstated to its (their) original condition, all to the approval of the Engineer.

All accommodation facilities of whatsoever nature provided by the Contractor shall be provided with adequate sewage and wastewater collection and treatment facilities to a design and of a capacity approved by the Engineer. Under no circumstances shall untreated sewage or wastewater be discharged to the natural environment.

**(6) Provision of First Aid/Medical Facilities**

Add the following after last paragraph

The Contractor shall provide information to his workers on methods of avoiding sexually transmitted diseases and infection by HIV/AIDS. The contractor shall make necessary arrangement to follow Covid-19 protocol and provide information about Covid-19 and its protocol.

**(9) Hazardous Materials**

Delete all three paragraphs and substitute with the following:

Hazardous materials are defined as cement, lime, bitumen and emulsion, paint, fuels, oils, battery acids, pesticides and herbicides. The Contractor may not store hazardous materials such as cement, lime, bitumen and emulsion, paint, fuels, oils, battery acids, pesticides and herbicides within 100 meters of seasonal or permanent water courses or springs. They must be housed in secure weather-proof buildings and protected against attacks by vermin and accidental contact by children.

Any worker handling hazardous materials must be appropriately equipped as described in subclause 111 (10).

Any hazardous material requiring disposal must be handled as described in sub-clause 111 (2) above.

Renumber existing clause 111(10): Reinstatement of Environment to 111(14);

Renumber existing clause 111 (11): Measurement and Payment to 111 (16);

Insert new clause 111 (10): Provision of Safety Clothing and Equipment

**(10) Provision of Safety Clothing and Equipment**

The Contractor shall provide all laborers, supervisors and site staff with suitable basic safety helmets, boots, clothing, etc.

All workers and supervisory staff when on any site shall wear the basic safety clothing specified. Where additional safety equipment is required by nature of the site, then all workers and supervisory staff when on any part of that site shall use the additional equipment in addition to the basic safety clothing specified.

In hot weather the Contractor shall provide appropriate lightweight safety equipment, such as cotton gloves in place of rubber gloves and canvas boots in place of rubber boots.

The Contractor shall be responsible for ensuring that all his employees and the employees of any Subcontractor and any visitor to the site complies with the Engineer's requirement to use safety clothing and equipment at all times. Failure in compliance with the Engineer's instruction in respect of safety clothing and equipment may lead to a suspension of works and a reduction or with-holding of payment until the Contractor complies.

Insert new clause 111 (11): Dust Nuisance

**(11) Dust Nuisance**

The Contractor shall avoid creating any high concentration of airborne dust or smoke within 100 meters of a house or other occupied building, or in situations likely to affect people, animals, crops or natural vegetation.

Dust from moving construction plant and fugitive dust from road traffic shall be controlled by the regular spraying of water on to road surfaces. The Contractor is responsible for all water spraying and the erection and maintenance of adequate speed bumps. The Engineer may instruct additional measures at his discretion.

Where earthwork excavations cause dust to blow into areas where causing a nuisance, the Contractor is responsible for altering the schedule of works to minimize the nuisance. This may involve restricting the timing of work to certain hours of the day or completing works and restoring a dust-free surface as rapidly as possible. The Engineer may instruct additional measures at his discretion.

Insert new clause 111 (12): Noise Pollution

**(12) Noise Pollution**

The Contractor shall take every precaution to control excessive noise that disturb the local population and wildlife. All static plant shall be located at least 100 meters from occupied buildings and at least 800 meters from sites deemed by the Engineer to be sensitive to wildlife. The Engineer may instruct the construction of baffles or bunds around noisy plant in order to reduce the noise pollution.

Add new clause 111 (13): Special Provisions for Sensitive Ecology

**(13) Special Provisions for Sensitive Ecology**

In addition to the provisions of other clauses, the Engineer may require the Contractor to undertake special provisions to protect any plant or animal deemed to be environmentally sensitive or otherwise worthy of special protection.

Renumber existing clause 111 (10) to 111 (14)

**(14) Reinstatement of Environment**

Add between existing two paragraphs:

The Contractor shall reinstate the environment of areas polluted by the use or spills of hazardous materials as defined in sub-clause 111 (9). All such materials and polluted soil shall be removed to a safe disposal site as described in sub-clause 111 (2) Disposal of Spoil and Construction Waste. The site shall then be restored and re-vegetated as described above. This provision applies in particular to all areas affected by bitumen.

Add the following at the end of the existing last paragraph:

The contractor shall reinstate the quarry site at the completion of the works as mentioned in Sub clause 111(1) and/or instructed by the Engineer.

Add new clause 111 (15): Protection of the Environment

**(15) Protection of the Environment**

The Contractor shall ensure that Site Offices, depots and particularly storage areas for diesel and bitumen are not located near watercourses and are operated so that no pollutants enter watercourses, either overland or through groundwater seepage especially during periods of heavy rain.

The Contractor shall, to the satisfaction of the Engineer, take all necessary precautions for the efficient protection of all surface and subsurface watercourses against all kinds of pollution arising from the execution of the work.

The Contractor shall not be allowed to discharge water containing silt, sand, cement or any other polluting materials such as sewage or hazardous materials into flowing or stagnant water bodies.

The Contractor shall ensure that at all locations where his labour force are living or working, other than labour living in their own homes, adequate facilities are provided to collect and treat all sewage and wastewater and to ensure that the effluent from such treatment facilities comply with recognized national or international standards for sewage treatment discharges.

The Contractor shall ensure that fuel wood is not used as a means of heating during the preparation or processing of any materials forming part of the Works.

The Contractor shall take special precautions in connection with the establishment of storage facilities for diesel fuel, petrol, lubricants, bitumen and bituminous materials. Storage facilities shall not be placed in rock-fall prone areas nor shall they be located within 500 meters of existing watercourses. They shall have barriers and impervious surfaces preventing leakages of spilt material outside the storage area or into the underlying soils. The Contractor shall present his plans for such facilities to the Engineer for his approval prior to their establishment. Such approval shall not reduce the Contractor's responsibility to prevent all such leakage nor his liability to remedy the damages which may be caused should such incidents occur. The Contractor shall ensure that all spoil or material removed from drains is disposed of to designated stable tipping areas approved by the Engineer.

The Contractor shall ensure that any cut or fill slopes are planted in grass or other approved plant cover as soon as possible to protect them from erosion. This planting shall follow the recommendations in the Nepali manual entitled "Vegetative Structures for stabilizing Highway Slopes" (DoR), or the requirements of the Specification as directed by the Engineer.

The water used in road construction shall not be allowed to affect water availability in the local communities. Where a scarcity of water is expected to arise, the contractor shall explore and tap alternative sources for water supply. In case of interference with the water supply of a settlement, the contractor is liable to provide the affected population with potable drinking water from alternative sources at no extra cost to the contract or the local people.

Renumber existing clause 111 (11) to 111 (16): Measurement and Payment

**(16) Measurement and Payment**

Delete the paragraph and substitute with the following:

No separate measurement and payment shall be made for the works described in this clause except for (a) provision and maintenance of contractor's camp for labour and staff and demolition after completion of works, (b) reinstatement of quarry sites at the completion of the works, (c) disposal of spoil, (d) provision of safety clothing & equipment and first aid/medical facilities, and (e) clearance of construction/waste material after completing the construction.

The payment for provision and maintenance of contractor's camp for labour and staff and demolition after completion of works shall be in three installments. The first installment, 50% (fifty percent) of the Lump sum amount quoted in BOQ shall be paid after establishment of the camp as per the specifications and approved by the Engineer. The second portion shall be 25% (twenty five percent) of the quoted lump sum rate and shall be payable as the contractor finishes 75% of the works and the facilities are provided to the satisfaction of the Engineer and the third portion 25% (twenty five percent) shall be paid after completion of the works and demolition of the camp as per the specifications and satisfaction to the Engineer. The payment for the provision of safety clothing and equipment and first aid/medical facilities shall be in the unit of month as quoted in BOQ upon providing and maintaining those facilities to the satisfaction of the Engineer. If the contractor does not provide them in time as per the Specifications, the Employer shall procure by quotation from the other sources after deducting from the Contractor's payment as per the quoted price including logistics and transportation costs, if any and supply at site. The payment for disposal of spoil shall be in the unit of cum.-km for the haulage of beyond 1 km at the environmentally safe tipping sites approved by the Engineer and satisfying the provisions of 111 (2). The payment for disposal of spoil shall be made in two installments. First installment 50% of the unit rate quoted in the BOQ shall be made after disposal to the site approved by the Engineer. The second installment of remaining 50% of the unit rate quoted in BOQ shall be made after making good the affected area through appropriate structures and re-vegetation as per 111 (2) and to the satisfaction of the Engineer. The payment for the reinstatement of the quarry site and clearance of construction/waste materials shall be in Lump sum as quoted in BOQ upon completion of the works and carried out to the satisfaction of the Engineer. The payment shall be the full and the final compensation to the contractor as per Clause 112 to complete the works in accordance with these specifications.

## 112 NOTES ABOUT MEASUREMENT AND PAYMENT

In sub-clause (1) Measurement, delete the whole of the last paragraph and substitute:

The tolerances given in these Specifications are for the evaluation of the accuracy to which work has been constructed and for determining whether work should be accepted or rejected. The measurement of work done shall be based on the actual measured quantity of acceptable work executed except that, where the actual quantity is greater than the quantity which would have resulted from the precise designed or instructed dimensions and/or levels then the payable quantity shall be limited to the quantity determined on the basis of calculation using the designed or instructed dimensions and/or levels.

Measurement and payments shall be made after the contractor has executed the works and has been accepted in place to the full satisfaction of the Engineer.

## 113 EQUIVALENCY OF STANDARDS

Add the following at the end:

The Contractor shall provide and/or make available the Standards as shown in the Appendices. There shall be no separate payment for the provision of such standards and payment shall be deemed to be included in the Contractor's rates for the provision of the Laboratory. In the event of the failure of the Contractor to provide documents for the required standards the Engineer shall purchase the document and deduct the cost from the payment

due to the Contractor for the provision of the Laboratory.

## 115 PROGRAMME

Add the following at the end of the clause:

This clause should be read in conjunction with the clause no. 8.3 of GCC.
The contractor shall submit at the end of each working week a detailed work programme for the next fortnight. The programme shall identify where further drawings or instructions are to be issued by the Engineer to avoid disruption to the progress of the Works.

## 116 SUPPLY OF PROJECT RECORD

Add following at the end of sub clause 116(1):

The Contractor shall use the digital camera to produce the digital images in place of conventional photographs. The Contractor shall print and supply in every month colour photographs along with the suitable photo album acceptable to the Engineer. The contractor shall also supply the soft copy of the digital images of the photographs in a CD or appropriate means.

The Contractor shall produce the video film in CD or appropriate means. The relevant BoQ item shall mean a set of master CD supplied each with four copies thereof. One set shall be produced at the beginning of the construction works for the whole length of the Contract along with the clips of the work under construction. The other set shall be produced at the completion of the construction works.

*Add the following New Clauses after Clause 116*

Add sub section "117 Void"

Add the following clauses:

## 118 CONTRACTOR'S ESTABLISHMENT ON SITE OFFICE, EQUIPMENT TESTING FACILITIES ETC.

It is the Contractor's responsibility to acquire land for the sitting of all his offices, accommodation, stores, testing facilities, equipment yards and workshops and for all temporary works and for the reinstatement of such land on completion of the Contract to the satisfaction of the owners and of the Engineer. The Contractor shall obtain the approval of the Engineer to the sitting of offices, accommodation, stores, testing facilities, equipment yards and workshops before such land is acquired and he shall indemnify the Employer against all claims and charges in respect of the occupation, use and reinstatement of the land.

The Contractor is solely responsible for the satisfactory accommodation of all his employees and for complying with all regulations and requirements in this respect.

## 119 LEGAL RELATIONS AND RESPONSIBILITY TO THE PUBLIC

The Contractor shall take the steps necessary to comply with the terms of the Conditions of Contract, particularly in respect of the insurances and indemnities required, and he shall comply with all regulations of statutory authorities.

## 120 PROVISION OF INSURANCES

The Contractor shall provide all necessary Insurances as required and detailed in GCC clause 19 and this Specification.

The lump sum price includes all expenditures expected in providing and maintaining from Date of Commencement till end of Defect Liability Period an insurance of Works, insurance of contractor's equipment, a third party insurance and insurance of personal injury or death as prescribed in GCC clause 19, including expenditures resulting from administration work, dealing with and reporting of claim, stamps duties, taxes, etc.

In case of any damages to the works for which the payment has been made by the Employer, it's the Contractor's obligation to reconstruct the same and claim for the payment from the insurance companies. No payment for the reconstruction of the damaged works shall be made by the Employer.

Measurement shall be as lump sum payments for all expenditure with regard to the provision of Insurances.

Payment of the lump sums shall be made under the relevant items in the Bill of Quantities on submission to the Engineer of acceptable Insurance policies, as required by the Conditions of Contract, with proof of payment of Insurance premiums. Where premiums are for one year only, 35% of the quoted lump sum shall be paid for the first year of the Contract period with a further 35% being paid on presentation of proof of payment of premiums for the rest of the construction period and the remaining 30% being paid on presentation of proof of payment of premiums for the Defects Liability period.

## 121 CONTROL OF THE WORKS

### (1) Compaction of materials

Compaction of materials shall be carried out in layers of uniform thickness using approved compaction equipment including combinations thereof if required by the Engineer to achieve the specified compaction.

Compaction with rollers shall commence at the edges and progress towards the center except in super elevated and other stretches of unidirectional cross-fall, where the rolling shall commence at the lower edge and progress towards the upper edge. When commencing rolling from an edge, rollers shall run forward and backward along the edge several times till the edge strip becomes firm to provide lateral support. The roller shall then move inwards parallel to the center line of the road in successive passes with the tracks made by successive passes overlapping. Rolling shall continue till the specified degree of compaction is achieved throughout. When rolling is terminated at an edge, the procedure similar to that for commencing rolling at an edge shall be adopted. During rolling, the top of the layer being rolled shall be checked for levels and cross-fall and any irregularities in these regards, corrected by scarifying the material in the affected area and by removing or adding materials and continuing with the rolling until the entire area being rolled has been brought to a state of uniform and desired compaction.

### (2) Mixing & Control of Moisture Content before Compaction

Before compaction is commenced each layer of uncompacted material shall be brought to a state of uniform composition, texture and moisture content by thorough addition and mixing of water or by scarification and drying as required. The Contractor shall be deemed to have taken account of the fact that the in-situ moisture contents of materials encountered may vary widely and the moisture contents at which the materials are to be compacted are specified for each type of material. The cost of all operations to bring materials to the specified moisture contents are deemed to be included in the rates tendered for works involving such materials. No separate payment will be made in respect of operations required to increase or reduce the moisture content of any materials.

### (3) Compaction Equipment

Mechanical equipment shall be used for compacting materials by rolling, tamping and watering the materials (if needed) before compaction. For other operations such as spreading, mixing and shaping, mechanical equipment only or a combination of mechanical equipment (which shall include graders) and manually operated tools and equipment shall be used. The choice of equipment and the procedure for its use shall be subject to the approval of the Engineer, and shall depend upon his being satisfied as to its effectiveness on the basis of trial compactions.

It shall be understood by the Contractor that different type of materials are likely to require different kind of compaction equipment, including successive applications thereof, for achieving the specified degrees of compaction and the Contractor shall keep available a fleet of compaction equipment of the requisite kinds, sizes and numbers which shall include, inter alia.

- Smooth - wheeled steel tyre rollers
- Sheep foot rollers
- Vibratory rollers
- Pneumatic rollers
- Vibrating plate compactors & vibro-tampers

For compacting along narrow strips e.g. along widening of pavements and in restricted areas appropriate sized purpose made compacting equipment will be required and the same shall be provided by the Contractor.

All equipment shall be of modern construction by established manufacturers and of proven efficiency and shall be operated and maintained at all times by skilled personnel in a manner acceptable to the Engineer.

For demonstrating the efficacy of mixing and compaction equipment and the working methods proposed to be used by the Contractor for different kinds of materials, the Contractor shall carry out compaction trials before full-scale construction on the road and during construction throughout the course of the contract as required by and in close cooperation with the Engineer. Based on results of compaction trials and observation of the construction process, the Engineer shall reserve the right to direct the use of particular mixing and compaction equipment and methods and disallow the use of others for compacting different kinds of materials in accordance with these specifications.

### (4) Dispersal of Hauling Equipment

Hauling equipment bringing materials to the site of work shall be dispersed uniformly over the surface of the previously constructed layers in order to avoid rutting and uneven compaction. Discharge of material from hauling equipment shall be carried out in a way which avoids the formation of concentrated heaps and deposits material as evenly distributed layers or windrows consistent with the loose thickness to be achieved before compaction.

### (5) Major Drainage Structure Construction Sequence

The Contractor shall program the construction sequences for all major drainage structures (e.g. box culverts) and submit a written statement thereof for the approval of the Engineer. The construction sequence shall consider, as a minimum, each phase of construction with respect to traffic control, diversions and the effects on existing structures. Where the Contractor proposes to partially demolish an existing structure to allow for phased construction, he shall demonstrate to the Engineer’s approval that the partially demolished structure is safe for use by his equipment and other road users.

**(6) Measurement and Payment**

No separate payment shall be made for compliance with the requirements of this clause. Payment shall be deemed to be included in the contractor's tendered rates.

## 122 CONTROL OF MATERIALS

**(1)** The Contractor shall be responsible for the provision of all materials required to construct the Works. All material salvaged and/or removed from the works remains the property of the Government. If the salvaged and/or removed materials are used in the works with Engineer's approval, then the rate shall be as per BOQ. The Contractor shall be responsible for the cost of replacement in the event of unauthorized use or removal.

Quarry and Borrow Pit areas identified as being likely to provide material shall be inspected and tested by the Contractor and it is the Contractor's responsibility to satisfy him as to the quality and quantity of suitable material to be gained from the identified sites.

Information regarding the position of Borrow Areas/Pits and Quarries and results of tests carried out on various samples of materials prior to the award of contract are available, on request, from the Employer. The Contractor shall be deemed to have considered this information during the preparation of his tender and to have carefully checked the availability of suitable material in sufficient quantities from these sources and from such other sources as he may consider necessary during the Bid Period and have fully satisfied himself of the characteristics of the materials, the suitability of the plant, the method of working and the haulage distances on which he has based his rates.

No claims relating to or originating from the quantity or quality of material at identified quarry or borrow areas shall be considered by the Employer.

The Contractor shall be responsible for opening up all Quarries and Borrow Areas and shall organize his method of operations so that only materials of a type and quality approved by the Engineer shall be selected for use in the Works.

The Contractor is at liberty to select and use material from his own sources providing the requirements of the Specification are fully met.

**(2) Approval of Sources of Material**

The sources of the materials shall be selected by the Contractor, but must be approved by the Engineer before the materials are used on the site. For this purpose, the Contractor shall furnish all relevant test data for representative samples from each source area as desired by the Engineer and also afford opportunities for the Engineer to visit the area of the sources. The Engineer may order that samples be taken and tested in his presence before approval for use of a source is given.

Notwithstanding approval of sources of materials, materials brought to the work site for use in the Works shall be subject to acceptance or rejection by the Engineer based on quality control tests to be performed before use in construction as per the specification.

**(3) Stockpiling of Materials**

All materials brought to the Site, if stockpiled shall be stockpiled and stored carefully at approved locations and in a systematic manner so as to prevent deterioration or mixing of different materials or contamination.. Materials which have suffered contamination or deterioration due to improper storage shall not be used in Works and shall be removed from the stock piling area and from the site.

The materials shall be free from foreign, organic or any other deleterious substances such as vegetation and perishable matter, or any other substance which in the opinion of the Engineer may affect placing mixing and compaction of the material or adversely affect the future performance of the Works. Material may be tested in stockpiles by the Engineer to check

suitability for use in the Works.

**(4) Temporary Stockpiling of Materials**

Where the work program is such that materials cannot be placed directly in their required position or mixing of two or more materials is required to meet the requirements of the Specification for a material the Engineer may authorize their removal into temporary stockpiles. Stockpile sites shall be to the Engineer's approval and shall be prepared by clearing and grading followed by compaction.

The material shall be stockpiled in successive layers of approved thickness over the full stockpile area to the approximate dimensions required by the Engineer and shall subsequently be reloaded and placed.

**(5) Payment**

No separate payment shall be made for compliance with the requirements of this clause. Payment shall be deemed to be included in the Contractor's rates.

**123 OVERHAUL**

Notwithstanding anything said or implied to the contrary anywhere else in this Specification or elsewhere in the contract documents no separate measurement or payment shall be made in respect of the haulage of materials of any nature, including excavated materials for the formation of embankment.

**124 WAGES**

**(1) Payment of Wages**

The Contractor shall pay his employees promptly and regularly at intervals of no more than two weeks, and all employees shall be paid in full and up to date before the issue of the Performance Certificate. The contractor shall not pay wages below the minimum wage.

**(2) Records**

The Contractor shall keep proper records of the days, dates and hours worked by every employee engaged on the contract, their gender, the class of work in which employed, whether as a casual or permanent employee, and the wages (and allowances if any), paid. These records shall be available at any time for inspection by the Engineer or the Engineer's representative or any authorized representative of the Government.

**(3) Default of Payment of Wages**

In the event of default in payment of wages to any worker employed on the contract, by the Contractor or his Subcontractor, and, if a claim with satisfactory proof thereof is received by the Engineer, the Employer shall make the payment of such a claim upon the recommendation of the Engineer, out of the monies at any time payable under the contract, and the amount so paid shall be deemed payments to the Contractor under the contract.

**125 SITE SAFETY**

The Contractor shall at all time in the conduct of his work and that of his Subcontractors adhere to the established rules and regulations concerning all safety matters at Site. This is especially important wherever it is necessary to enable the free passage of the public through the Site.

During construction the Contractor shall erect, maintain and subsequently remove sufficient barricades, guards, lighting, sheeting, shoring, temporary sidewalks and bridges, danger signals as well as temporary covering of potential accident areas.

All open excavations shall be protected sufficiently to keep out livestock, and ensure the safety

of workmen and members of the public and be in accordance with the local regulations.

The Contractor shall be responsible for ensuring that all persons working in the vicinity of power lines are aware of the relatively large distance that high voltage electricity can "short" to earth when cranes or other large masses of steel are in the vicinity of power lines.

Where work is to be carried out in the proximity of buildings, bridges, tanks or other structures, the Contractor shall take all necessary precautions, including shoring and strutting, where necessary, to ensure the safety of the structures that are at risk.

The Contractor shall be responsible for all damages or injury which may be caused on any property by trespass by the Contractor's or his Subcontractor's employees in the course of their employment.

**Section 200 SITE CLEARANCE 201 CLEARING AND GRUBBING**

At the end of Sub Clause 201(2) (d) add the following additional Sub-Clauses:

**(e) Clearing of Landslides**

"When instructed by the Engineer, the contractor shall remove all debris/materials from landslides as soon as possible after receiving instruction. The first priority will be the removal of material to maintain safe vehicular access and the second to remove material in order to continue construction of the works. The Engineer shall determine the amount of the material to be removed and/or any further work which may be required to stabilise the landslide.

Where a landslide has occurred in an area where the contractor has commenced but not completed excavation works of any nature and such excavation works have, in the opinion of the Engineer, been the direct or indirect cause of the landslide, the responsibility for clearing and stabilising the landslide shall rest entirely with the contractor. Elsewhere the volume of material directed to be removed shall be measured in cubic meter.

The Contractor shall inform the Engineer and the Client’s PIC as soon as the landslide is noticed with photographs and make necessary measurement to the extent as far as practical before removing the landslide debris for opening the traffic.

**(f) Clearing of Debris**

The contractor shall remove all debris from causeways, culverts and side drains as per the instruction of the Engineer.

**(4) Measurement**

At the end of the Sub Clause add the following:

Landslides and debris removed as per this specification shall be measured in cubic meter. Debris clearance from causeways, culverts and side drains shall be measured for one time only at the starting of the contract. Afterwards, debris clearance shall be covered by the Routine Maintenance.

**(5) Payment**

At the end of this sub clause add the following:

No payment shall be made in respect of clearing and grubbing carried out at the sites of quarries, borrow pits, Contractor’s facilities or any other area other than those areas specifically directed to be cleared and grubbed by the Engineer for the execution of the permanent works.”

Clearing of Landslide and Debris shall be paid at their respective contract unit rates which shall be full and final compensation to the contractor as per clause 112.

No payment shall be made for the removal of the landslide of less than20 cubic meters nor for the first 20 cubic meters in any one occurrence.

## 202 DISMANTLING CULVERTS, BRIDGES, OTHER STRUCTURES AND PAVEMENTS

(1) **Scope**

At the end of this subclause add:

"The Engineer shall designate all materials arising from dismantling as:

(a) Scrap to be disposed of by the Contractor, or

(b) Salvageable material to be reused in the Works, or

(c) Salvageable material to be retained by the Employer

(2) **General Para (d)**

In the third line after the Words “reconstructed work” delete the comma and insert the words “and which shall be repaired or replaced by the Contractor at his expense”

At the end of sub-clause (2) f add:

In case of dismantling stone masonry structures, up to **20 percent** of stone from masonry works can be salvaged and reused in construction work and in case of gabion structures up to **80 percent** of stone can be salvaged and reused in construction work. Thus the dismantling of such structures shall be carried out carefully and the salvaged materials shall be collected and transported up to nearest construction site and stacked in appropriate locations.

**(7) Payment**

At the end of this paragraph add the following:

Payment shall include cost for all operations such as dismantling, separating the scrap and salvaged materials, disposal of scrap materials to environmentally safe tipping site, transportation and stacking of salvaged materials to nearest construction site complete.

This payment shall include for all costs of disposing of scrap materials, for all costs of reusing salvageable materials designated for reuse in the works and for all costs of transporting and stacking salvageable materials to be retained by the Employer in locations directed by the Engineer.

All scrap materials shall be disposed of in an environmentally sound manner approved by the Engineer which shall ensure that the existing environment is maintained free of all forms of contamination, including visual contamination, arising from the disposal of such materials.

**Section 400 FENCING 406 MEASUREMENT**

Replace the word “fencing” with “permanent fencing”:

**407 PAYMENT**

Add following text at the end of paragraph:

No separate payment will be made for all kinds of temporary fencing. All costs in connection with the temporary fencing work shall be considered to be included with other related items of work in the BOQ.

## Section 500 QUALITY CONTROL

### 502 CONTRACTOR RESPONSIBLE FOR THE QUALITY OF THE WORKS

Delete the last-sentence of the second paragraph and substitute:

"This laboratory shall be for the use of the Engineer and his staff as well as for that of the contractor and the Engineer shall at all times have free access to the laboratory, the equipment and all records of testing carried out and shall have the use of the contractor's laboratory staff as he may require for carrying out additional testing for the purposes of control, verification and acceptance. The laboratory facilities to be provided and the list of equipment to be purchased shall be approved by the Engineer. In designing the facilities and compiling the list of equipment the Contractor shall have due regard to the details of facilities and list of equipment given in the Appendices to these Special provisions. The detail given in the Appendices are indicative of minimum requirements. In equipping the laboratory the contractor must himself make allowance for the need to be able to conduct all tests required by this Specification in regard of the works or materials itemized or implied in the drawings and the Bill of Quantities. The lists in the Appendices notwithstanding, the Contractor remains responsible for the supply of all equipment of whatsoever nature and in whatsoever quantity required for carrying out all of the tests specified at the frequency specified."

### 505 TESTING PROCEDURE AND SET OF TESTS

Delete the final words of the second paragraph commencing "as per the prevalent accepted ...." and substitute:

"In accordance with National Specifications stipulated by the Engineer. If no National Specifications acceptable to the Engineer exist then tests shall be carried out in accordance with the directions of the Engineer.

The contractor is fully responsible for all kinds of tests, its availability and procedures. If the testing facilities are not available within the country, the contractor shall arrange such tests and its testing certificates from other sources."

### 507 SITE TRIALS OR TRIALS SECTIONS

(3) Production of Materials and Crushing Plant

In the first paragraph of this subclause in the second line after the words "to be processed using...." insert:

"the initial material collection procedures,"

### 510 SCHEDULE OF TESTS

Delete last sentence of first paragraph and substitute as follows:

Frequency of tests could be changed by the engineer depending upon the consistency of quality of materials.

**504 FIELD LABORATORY**

Add the following 504 (A) and 504 (B) clauses after "504 Field Laboratory".

**504 (A) PROVIDE, EQUIP, OPERATE AND MAINTAIN LABORATORY**

**(1) Location**

In the fourth line of this subclause delete the word “may” and substitute with “shall”.

At the end of subclause (1) Location add the following:
“Unless shown or directed otherwise the Laboratory shall be located within 500 metres of the Engineer’s office.”

**(2) Setup**

In this subclause delete the first paragraph and substitute the following:

“The minimum requirements for the Laboratory are described in the Appendices 1, 2 and 3. The operational Laboratory facility, complete with equipment, shall be ready for use within 4 weeks from the date of the Engineer’s Notice to Commence the Works.

The contractor is responsible for providing and maintaining the laboratory including, transportation facilities for testing, semi skilled such as assistant lab technician, lab boy, etc and unskilled manpower, such as labours, etc.

“When the Works are completed and the Engineer certifies that there is no further requirement for the Laboratory then the Laboratory and the equipment shall become the property of the Contractor who shall remove the same from the site forthwith.

**(3) Laboratory Equipment**

Delete the last two sentences starting from “ For guidance list of laboratory equipment…….” to end of the subclause 3 and substitute as follows:

“The minimum requirements for the Laboratory are described in the Appendices 1, 2 and 3”.

**(6) Measurement**

Delete the sub-clauses (a), (b) and (c) and substitute the following:

The Laboratory for the use of the Engineer including the provision of all necessary equipment shall be measured as the Lump Sum item provided in the BOQ.

**(7) Payment**

Delete the sub-clauses (a), (b) and (c) and substitute the following:

Payment for the Laboratory shall include for:

- Acquisition and payment for land whether purchased or leased.
- Provision and subsequent removal of the building, access road, hard standing, fences etc.
- Connection and subsequent disconnection of electrical and water services, or alternative provisions and the provision of electricity and water.
- Provision of drainage systems for waste, sewerage and surface water.
- Provision of all necessary laboratory equipment

- Provision of necessary skilled, semi skilled and unskilled manpower
- Provision of necessary transportation facilities for testing procedure
- Provision of all necessary building maintenance and cleaning services
- Removal of the building and equipment
- Reinstatement of the site to the satisfaction of the Engineer.

Payment for the Laboratory shall be made in three separate portions. The first portion shall be 50% (fifty percent) of the quoted lump sum rate and shall be payable upon satisfactory completion and equipping of the Laboratory and upon occupation and use of the Laboratory to the extent that laboratory staff can properly perform their duties under the Contract to the satisfaction of the Engineer.

The second portion shall be 25% (twenty five percent) of the quoted lump sum rate and shall be payable as soon as the contractor finishes 75% of the works and the third portion 25%(twenty five percent) shall be payable as soon as the contractor have removed the Laboratory and equipment and reinstated the site to the satisfaction of the Engineer following the Engineer's certification that these facilities are no longer required.

The payments for the Laboratory and Equipment shall represent full and final payments for the Contract item and the Contractor shall not be entitled to any further compensation irrespective of any extension to the Contract period or to the Works for whatever reason.

Add the following sub clause

**(8) Management of Laboratory**

The laboratory and facilities may be shared (if required) amongst other contractors engaged in related packages in the same Road. The laboratory shall function under the direction of the Engineer and shall ensure equal opportunity and access for all interested parties to the laboratory and its testing facilities. The contractors of each contract shall have their own team of manpower consisting of Laboratory Technicians, Assistant Lab Technicians, Lab Boys and labours, own transportation facilities for testing purposes as well as Lab consumables for carrying out the testing required for compliance with the specifications. The contractor shall continue to provide the full use of the Lab facilities until work has been completed on all the related contracts.

The use and management of the Laboratory in this manner shall not relieve the contractor of his obligations to carry out the testing required for compliance with the Specification.

**(9) Maintenance of Laboratory**

The contractor shall maintain and remove, on completion of the Works, laboratory established for the use of the Engineer and his staff as well as for that of the contractor and other contractors sharing the laboratory.

The contractor shall continue to maintain the laboratory until work has been completed on all the related contracts. Calibration of the equipment provided in laboratory will be carried out immediately after installing and at regular intervals of one year thereafter as per international standards for re-calibration of equipment.

All offices and any testing laboratory shall be regularly and properly cleaned and maintained for so long as they are erected. The Engineer may require any of the offices with all or any of the equipment, supplies and furnishings to remain for occupation and normal use during the period of execution.

## 504 (B) BASIC EQUIPMENTS, TESTING CONSUMABLES AND MANPOWER

The contractors of each contract shall have their own separate team of manpower consisting of Laboratory Technicians, Assistant Lab Technicians, Lab Boys and labours, own transportation facilities for testing purposes as well as Lab consumables for carrying out the testing required for compliance with the specifications.
In addition to the equipment available through the Laboratory, the contractors of each contract as a minimum must themselves supply, all necessary equipment for basic field testing on contract in which they are involved, including, but not limited to:

- Field density apparatus and supplies for field density test
- Concrete cube moulds and compaction apparatus for concrete cube casting
- Cement sand mortar moulds and compaction apparatus for mortar cube casting
- Sieves for gradation test for checking of aggregates and pavement materials

### (6) Measurement

No separate measurement shall be made for the activities required under this clause 504(B).

### (7) Payment

No separate payment shall be made for the activities required under this clause 504 (B). All costs in connection with the activities specified herein shall be considered included in the related items of the work specified in the Bill of Quantities

## Section 600 MATERIALS AND TESTING OF MATERIALS

### 604 INSPECTION AND ACCEPTANCE OF MATERIALS

Delete the second and third paragraphs of this clause substitute the following:

"A preliminary inspection of the materials may be made at the source for the convenience and accommodation of the Contractor, but neither the presence of neither a representative of the Engineer nor the subsequent testing of work or materials by the Engineer shall relieve the Contractor of the responsibility for furnishing work and materials complying with these Specifications.

"The representative of the Engineer shall have free entry at all times to those parts of any plant which concern production of any materials for incorporation into the Works and the Contractor shall ensure that any order for materials which he places includes the necessary provisions to ensure that such free entry is available."

**Add sub-section 704 Laying of PLHDPE pipe**

### 704 Laying of PLHDPE pipe

(1) Transportation and laying of PLHDPE pipe

The PLHDPE pipes, warning tape and necessary couplings will be provided by Employer. The Contractor has to transport PLHDPE pipes and couplings from the storage yard of Nepal Telecommunication Limited in Kathmandu. After excavating to required depth as shown in drawing the PLHDPE pipes are to be laid in position and joined by socket (coupling). After laying and joining the pipe, back filling by excavated material with proper compaction (as per sub-clause 910) is to be done layer by layer as directed by the Engineer. During back filling warning tape is to be placed at the depth as shown in drawing.

(2) Measurement

The PLHDPE pipe, couplings, and warning tape transportation, earthwork excavation, laying, joining, placing, backfilling shall be measured in running meter of PLHDPE pipe laid.

(3) Payment

The PLHDPE pipe laying and joining including transportation, excavation. backfill shall be paid at their respective contract unit rate. The contract unit rate shall also cover the placing of warning tape.

## Section 900 EARTHWORKS

### 902 DEFINITIONS AND GENERAL REQUIREMENTS

Delete the final sentence of sub clause (8). At the end of the first sentence of sub clause (8) add the following:

"The surveyed points thus obtained shall be used to correct or augment the existing survey data referred to in Clause 106 above."

Add following after sub-clause 902-2-iii-e

(f) Top soil

### 903 Classifications of Excavated Materials

Delete the whole text of sub clauses (1) to (6) and substitute the following:

**(1) All type of soil including Hard Rock**

Soft soil, hard soil, boulder mixed soil, soft rock and any other type of soil encountered in the excavation including Hard Rock shall be classified in this category.

## 907 EXCAVATION FOR FOUNDATION

The title should be read as Foundation For Structures.

Add at the end of sub-clause 1 “The materials are classified as follows for excavation to structures:”

**(i) All type of soil including Hard Rock**

Soft soil, hard soil, boulder mixed soil, soft rock and any other type of soil encountered in the excavation including Hard Rock shall be classified in this category.

## 908 REFILLING OF FOUNDATION PITS AND TRENCHES, REMOVAL OF SUPPORTS AND FILLING TO STRUCTURES

Replace the contents of “Table 9.1: Grading Limits of pervious backfill" with the contents of “Table 31.1: Filter Material Grading Limits” which is given below:

| Sieve Size (mm) | Percentage Passing by Wright |
|---|---|
| 63 | 100 |
| 37.5 | 85-100 |
| 20 | 0-20 |
| 10 | 0-5 |
| 0.075 | - |

## 909 FORMING OF EMBANKMENT AND OTHER AREAS OF FILL

In sub clause (3) the "original ground" shall deem to include “The ground after clearing and grubbing”

Add the following additional sub clause:

(10) All materials which are deposited in place prior to compaction shall be evenly spread over the whole of the designated area for the layer concerned and in such quantity that the thickness of any one layer, when measured after compaction, shall comply with the requirements specified.

Any new layer less than 75 mm in compacted thickness shall be bonded to the previous layer by scarifying the previous layer to a depth not less than 25 mm or to such greater depth so that the total compacted thickness of the new layer plus the scarified portion of the previous layer will not be less than 100 mm.”

## 917 MEASUREMENT

At the end of sub clause (2) add the following:
In the case of excavation, initial cross section shall be taken before starting of the excavation.

Replace the whole content of first paragraph of sub clause (4) with the following:

If the excavated materials are required to be disposed beyond 1 km length from the place of excavation, additional lead (in excess of 1 km) shall be measured separately for payment. However, initial lead of 1 km shall not be measured for payment. This shall be deemed to be included in the measurement of the item itself. The haulage distance for disposal of the excavated materials shall be measured from the mid point of each kilometre. The Contractor shall seek prior approval from the Engineer to decide the tipping site for the disposal of the surplus material of a particular section. However, the measurement of foundation excavation

shall be inclusive of all leads and lifts (i.e. no separate leads and lifts shall be measured in foundation excavation.)

At the end of sub clause (4) add the following:

“The measurement of earthworks quantities for payment shall be based on the premise that all suitable material arising from the operations are used in the formation of embankment unless, over the contract as a whole, there is a surplus of suitable excavated material over the volume required for formation of embankment in which case the surplus suitable material shall be considered as run to spoil.”

However, no lead and lift shall be measured for the formation of embankment.

**918 PAYMENT**

At the end of sub clause (1) add the following:
The payment for earthwork excavation shall be made in two (2) installments. First installment 60% of the unit rate quoted in the BOQ shall be made after carrying out the excavation works. The second installment of remaining 40% of the unit rate quoted in the BOQ shall be made after haulage of the material at the locations approved by the Engineer.

**Section 1000 SUB GRADES**

**1002 DEFINITIONS**

**(2) Sub grade**

Delete the definition and replace with:

Below the sub-base level is designated as "Sub grade”.

**(3) Capping Layer**

Delete the definition and replace with:

Capping layers (also known as selected fill or selected or improved sub grade) are layers of specified materials, laid and compacted generally over weaker materials either to aid the passage of construction traffic or to improve the condition of the layer immediately below the sub base layer. Such improvements may be made through the addition of suitable imported material with 4 day soaked CBR of 15% or more, or by the mechanical or chemical stabilisation of the existing material.

**1003 PREPARATION AND SURFACE TREATMENT OF FORMATION**

In the opening paragraph delete the words of the first sentence "the subbase or the base where no subbase is required" and replace with "any embankment or pavement layer".

Add the following immediately after the opening paragraph:

"Preparation of formation i.e. sub-grade preparation shall also apply to the preparation of the base of embankment if instructed by the Engineer and shall include scarification, spreading and compaction of material across the full width of the layer or area. Such preparation shall not be measured twice at any location".

“If instructed by the Engineer, any processing of in-situ material that meets the specification for sub grade will include scarification to a depth not less than 300 mm or to a depth as agreed with the Engineer, watering, shaping and compaction of the material. No separate measurement and payment for this processing shall be made as the costing of the contractor for this process shall be deemed to be included in the item of sub-grade preparation in the unit of square meter. In case of embankment fill, the measurement for sub-grade preparation shall be deemed to be included in the rate for the provision of the layer concerned and no separate

payment for preparation of formation (i.e sub-grade preparation) will be made."

Add the following sub clause:

**(6) Scarification of existing bituminous surfaces**

The existing bituminous pavement layer shall be scarified to a depth of 100 mm and trimmed to the required camber. The spoil material shall be disposed at approved disposal sites. The scarified surface, in the section to be rehabilitated, within the existing carriageway shall be considered as within sub-base layer and is further treated accordingly. The proposed pavement widening portions flanking the scarified pavement shall be further excavated to accommodate from capping layer upwards as shown in the drawings.
The work shall be measured in square meter of the scarified layer and shall be paid at the contract unit rate which shall be the full and the final compensation to the contractor for scarification of the existing pavement and transportation of the spoil material up to a lead of 1 km. Lead in excess of 1 km shall be measured and paid separately.

## 1004 CAPPING LAYER

Delete the first sentence and replace with:

Where shown on the drawings a Capping Layer shall be placed at, or on, the top of the sub grade to a thickness as indicated on the drawings.

If instructed by the Engineer any processing of in-situ material that meets the specification for the capping layer will include scarification to a depth not less than the specified thickness of capping layer or to a depth as agreed with the Engineer, watering, shaping and compaction of the material. Measurement and payment for this processing shall be for the cubic metre of material so processed in accordance with the provisions in this sub-section. In this case no separate payment for preparation of formation will be made.

## 1005 MECHANICAL STABILISATION

**(1) General**

Delete the first and second paragraphs and replace with:

The extent of mechanical stabilisation shall be at the Contractor's discretion.

**(2) Material Requirement**

**(a) Stabiliser**

Delete and replace with:
The Contractor is at liberty to mechanically stabilise any material, whether in-situ or imported, to provide any pavement layer material, provided that the resulting material is in conformity with the specification.

The type and amount of stabiliser used shall be such that when mixed with the in-situ or imported material the specified requirements for the layer material are achieved.

**(b) Stabilised Material Requirements**

Delete this sub-section:

**(3) Amount of Stabiliser to be added**

Delete this sub-section

**(8) Measurement and Payment**

Add sub clause 1005 (8): Measurement and Payment

No additional payment will be made for additional quantity for mechanical stabilizer. It will be

deemed that rate for these quantities are included in respective items.

**1007 MEASUREMENT**

In sub clause (1) in the second line delete the words "taking cross sections at intervals of 10 metres" and substitute:

"generating cross sections from the original and augmented survey data and digital terrain model at intervals 2.5 metres in hill roads"

In the same sentence delete the words "in the original position before the work starts and after its completion"

At the end of sub clause (2) add the following:

Preparation of sub-grade shall be measured in square meter.

Delete the whole of sub-clause (4) after the opening sentence.

In the opening sentence delete the word "exclusive" and replace with "inclusive"

## Section 1100 ROADWORKS OVERALL REQUIREMENTS

### 1101 HORIZONTAL ALIGNMENTS, SURFACE LEVELS AND SURFACE REGULARITY OF PAVEMENT COURSES

Add following paragraphs at the end of Sub-clause (3):

**Remedial Works**

When upon examination by the Engineer any part of the Works or any plant fails to conform to the Specification requirements, or is at any stage before final acceptance damaged so that it no longer conforms to the requirements of the Specifications, the Engineer shall instruct its complete removal and replacement, at the Contractor's expense, with satisfactory work, plant or material. In special cases the Engineer may instruct the Contractor to apply remedial measures in order to make good any such defects or damage.

The actual remedial measures taken shall be entirely at the Contractor's own cost but subject to the Engineer's approval regarding the details thereof.

In particular remedial measures shall ensure that the final product is in full compliance with the Specifications, shall not endanger or damage any other part of the Works and shall be carefully controlled and submitted to the Engineer for examination when completed or at any intermediate stage as may be required.

For the guidance of the Contractor an indication about what may be required in the more common cases of defects or damage is given below, but the Engineer will in no way be bound to approve of or adhere to the measures indicated, as the actual remedial measures will be dictated by the circumstances of each particular case.

**Local Defects in Pavement Layers**

Where remedial measures are taken to make good localised defects the length and width of the area to be repaired by equipment shall be such as to accommodate the full width of the equipment used and of a reasonable length to ensure effective repair.

The depth to which material will have to be removed will depend on the defect and the type of material. Gravel layers will need to be broken up to a depth of at least 75mm and crushed stone will usually need breaking up over its full depth.

**Concrete**

Defective concrete work will normally need the cutting back and complete removal of any weak or honey-combed sections and making good using approved bonding agents to bind fresh concrete to old concrete. Cracks, if permitted to remain, shall be injected with approved

compounds and test cores drilled to test the efficacy of the injection process.

**1104 CARE OF WORKS**

Replace the opening sentence with the following:

The general obligations of the Contractor in terms of the Conditions of Contract "Care of the Works" shall include, inter alia, the following:

## Section 1200 SUB-BASE, BASE, HARD SHOULDER AND GRAVEL WEARING COURSE

### 1201 GRANULAR SUBBASE

**1) Scope**

Add "or crushed stone" at the end of the sentence.

**(5) Laying and Compacting**

Add the following at the beginning:

The sub-base shall be constructed after checking that the underlying layer conforms to the specified requirements and has been approved by the Engineer.

Replace “100mm" with "75mm" in the last sentence of third paragraph.
Add following paragraphs at the end:

In case of existing Road where subbase shall be prepared using scarified base and subbase materials, contractor shall scarify carefully the existing surface up to subbase level and remove the bituminous layer. The remaining material shall be well mixed and spread as subbase material and compacted to design level. Minimum thickness of newly prepared subbase shall be not less than 200mm.

The Contractor shall protect and maintain the sub-base at his own expense. Maintenance shall include the immediate repair of any damage or defects which may occur and shall be repeated as often as is necessary to keep the sub-base continuously intact. Repairs shall be done in such a manner that will ensure restoration to an even and uniform surface and may involve scarifying, watering and re-compacting.

**(9) Measurement**

Delete the whole paragraph and replace with:

a) Preparation of subbase on existing pavement width with the reuse of scarified Base/Subbase shall be measured in square meter of the material compacted in place (in line and level) and accepted.

b) Subbase obtained from surplus of scarified base/subbase of existing pavement and used out side of existing pavement location shall be measured in cubic meter of the material compacted in place (in line and level) and accepted.

c) Granular sub-base (new) shall be measured in cubic meter of the material compacted in place and accepted. Measurement shall be based on the cross section of the sub-base shown in the drawings and the actual length measured horizontally along the centre line of the surface of the road, or in case of edge widening, along the centerline of the widened section.

### 1205 SHOULDER ISLANDS AND MEDIAN

**(2) Material**

Add paragraph (e) to read: A Dense Bituminous Macadam in accordance with Clause 1308

Replace the first paragraph of Sub clause “1205 (3) Construction of Shoulders” as follows:
The sequence of operations shall be such that the construction of paved shoulder is done in

layers each matching the thickness of adjoining pavement layer. Only after a layer of pavement and corresponding layers in paved and earth shoulder portion have been laid and compacted, the construction of next layer of pavement and shoulder shall be taken up.

Where the materials in adjacent layers are different, these shall be laid together and the pavement layer shall be compacted first. The corresponding layer in paved shoulder portion shall be compacted thereafter, which shall be followed by compaction of earth shoulder layer. The adjacent layers having same material shall be laid and compacted together.

In all cases where paved shoulders have to be provided along side of existing carriageway, the existing shoulders shall be excavated in full width and to the required depth. Under no circumstances, box cutting shall be done for construction of shoulders.

In the case of bituminous course, work on shoulder (earthen or hard or paved), shall start only after the pavement course has been laid and compacted. During all stages of shoulder construction, the required cross fall or camber shall be maintained to drain off surface water. Contractor shall ensure that the method of construction is such that at no time water gets prevented form draining off the pavement layers. The method of laying and compacting shoulder material and the compaction requirements shall be in accordance with the relevant Sub-clauses of 1201, 1205, 1208, 1305 and 1308.

Regardless of the method of laying, all shoulder construction material shall be placed directly on the shoulder. Any spilled material dragged on to the pavement surface shall be immediately removed, without damage to the pavement, and the area so affected thoroughly cleaned.

## 1208 WET MIX MACADAM BASE AND SUB-BASE

### (1) Scope

Add at the end of Subclause (1)

The material shall be laid in one or more layers as necessary to lines, grades and cross-sections shown on the approved drawings or as direction by the Engineer.

The thickness of a single compacted Wet Mix Macadam layer shall not be less than 75 mm. When vibrating or other approved types of compacting equipment are used, the compacted depth of a single layer of the sub-base course may be increased to 200 mm upon approval of the Engineer.

### (7) Laying and Compaction

Add the following at the beginning:

Where the base course is laid over the prepared sub-base, the surface shall be brushed free of dust and extraneous matter and, when instructed by the Engineer, watered before laying the base course.

Add following after first paragraph:

In order to minimise for segregation, the material shall be kept wet during transport and spreading. The dumps of material shall be spread out to a flat-surfaced layer with a thickness suitable for mixing. Thereafter the required amount of water shall be added and the material thoroughly mixed with a motor grader or other suitable approved means until a uniform homogeneous mixture is achieved. The required amount of water and moisture content shall be determined by carrying out field trials but shall normally be within 2% of the predetermined optimum moisture content at the time of compaction. The material deposited on the prepared existing surface may be spread and shaped by any method which will not cause the segregation of coarse and fine particles. The Contractor shall ensure that joints in consecutive pavement layers do not coincide. All areas of segregated coarse and fine material shall be

corrected by remixing or removing and replacing with well graded material to the approval of the Engineer. The base material shall be compacted using approved vibratory compaction equipment whose vibrators shall function correctly in accordance with the manufacturer's instructions.

At the end of sub-clause 1208(7) add:

In case of existing Road Contracts where subbase shall be prepared using scarified base and subbase materials, contractor shall scarify carefully the existing surface up to subbase level and remove the bituminous layer. The remaining material shall be well mixed and spread as subbase material and compacted to design level. Minimum thickness of newly prepared subbase shall be not less than 200mm.

Add following at the end of sub-clause 1202 (7)

The Contractor shall protect and maintain the completed base layer at his own expense until the surfacing is applied. Maintenance shall include the immediate repair of any damage or defects which may occur and shall be repeated as often as is necessary to keep the layer continuously intact and in good condition. Repairs shall be done in such a manner that will ensure restoration to an even and uniform surface. Traffic shall not be allowed directly on any unprimed base layer unless instructed or authorized by the Engineer.

The completed base shall be primed as soon as possible after approval from the Engineer.
Add following test after Table 12.5:

In addition to the minimum test frequency for gradation at least two gradation test in every 1500 sqm. of completed pavement layer shall be performed.

## Section 1300 BITUMINOUS SURFACE AND BASE COURSE

### 1301 GENERAL REQUIREMENTS FOR BITUMINOUS PAVMENT LAYERS

**(6) Cutting back of Bitumen**

Add the following at the end:

In general the preparation of cutback bitumen for prime coat shall be carried out in accordance with Transport Research Laboratory TRRL Research Report RR104 ''Preparation of Cutback Bitumen" (by Hitch and Steward).

### 1302 PRIME COAT AND TACK COAT

**(2) Materials**

Delete the first paragraph and replace with:

The prime coat shall consist of medium curing cutback bitumen MC-30, MC-70 or MC-250 from a source approved by the Engineer. The application rate of cutback bitumen to be used shall be instructed by the Engineer on Site after field trials. These field trials shall be carried out by the Contractor as instructed by and under the supervision of the Engineer and the cost thereof shall be deemed to be included in the prime coat rates. The object of the trials is to achieve the optimum penetration of prime coat and the minimum rate of spread at which this penetration can be achieved.

Type and Quantity of Cutback Bitumen for Prime various type of Granular Surface

| Type of Surface | Type of Cutback | Rate of Spray(Kg/Sq.m) |
|---|---|---|
| WMM | MC 30 | 0.6 – 0.9 |
| Stablized Soil base/Crusher Run Macadam | MC 70 | 0.9 – 1.2 |

Add following at the end of subclause (2):

When, in the opinion of the Engineer, blinding to the primed surface is required, blinding aggregate shall be spread evenly over the full width of the primed surface such that no bituminous prime material will be picked up by passing traffic. No traffic shall be allowed to pass until the prime has been adequately covered to prevent pick-up from vehicles. Any removal of prime caused by traffic passing shall be remedied to the satisfaction of the Engineer. In general, priming shall be carried out in half widths and the Contractor shall ensure that traffic is kept off the prime until it has adequately cured, after which it shall, where practicable, be trafficked as described below. Blinding to uncured prime coat will only be used where the Engineer agrees that this is a necessary or unavoidable measure.

**(4) Spraying of Prime Coat and Tack Coat**

Add the following at the end:

Spray record sheets containing details of ambient temperature, spraying temperature, areas sprayed and quantities of materials used shall be submitted by the Contractor on a daily basis for approval by the Engineer.

Following the prime coat application, the primed, unblended surface shall be allowed to cure for a minimum 24 hours, or for a time as agreed with the Engineer, without being disturbed so as to allow the prime coat to fully penetrate the surface unless full penetration and curing has taken place in the opinion of the Engineer in a shorter period. If after this period the prime coat has not sufficiently cured to permit trafficking without being picked up, and the Contractor wishes to open the section to traffic, the Engineer shall either instruct that the area be left for a further period until the prime coat has fully penetrated and aired to allow traffic to pass or

shall permit the Contractor to place mineral aggregate for blinding, at his own cost, applied at a rate and in the places instructed to blot up the excess bitumen. Where the Engineer agrees that blinding is necessary in limited areas to permit the unavoidable movement of traffic, at locations such as road junctions, narrow road sections etc. the Contractor shall place mineral aggregate for blinding applied at a rate and in the places agreed and shall be paid for this work at the rate in the Bills of Quantities.

As soon as the primed surface has cured sufficiently or sufficient mineral aggregate for blinding has been applied to allow traffic to pass over the road without the prime coat being picked up, the road shall, where practicable, be opened to public traffic for a period of 14 days or less if agreed by the Engineer. During this period the primed area under traffic shall be maintained and all damage caused by traffic shall be repaired as instructed by the Engineer at no extra cost. Thereafter the contractor shall maintain the primed surface and shall protect the surface until the application of surfacing by taking suitable precautions including for example supplying and spreading a protective layer of sand at no extra cost. Minimum rate of spray of tack coat over newly constructed DBM will be 0.20 – 0.3 Kg/$m^2$ and no additional tack coat provided over prime coat.

### (7) Testing

Add the following at the beginning:

Samples of the bituminous material that the Contractor proposes to use, together with a statement as to their source and character shall be submitted and approved before use of such material. The Contractor shall require the manufacturer or producer of the material to furnish material subject to this and all other pertinent requirements. Only satisfactory materials, so demonstrated by service tests, shall be acceptable.

The Contractor shall furnish vendor's certified test reports for each consignment of bituminous material supplied. The reports shall be delivered to the Engineer before permission is granted for use of the material. The furnishing of the vendor's reports shall not be interpreted as basis for final acceptance. All such test reports shall be subject to verification by testing samples of materials received.

### (8) Measurement

Add following at the end of paragraph:

No separate payment shall be made for (3) Preparation of surface and it shall be deemed that the cost of this activity is included in the respective item.

At the areas where Contractor has to use sand blinding to blot up the excess bitumen and the Engineer permits to do so, the Contractor shall carry out sand blinding at his own cost. In such case, it shall be deemed that cost of blinding material is included in the respective item.

## 1308 DENSE BITUMINOUS MACADAM

### (2) Materials

### (a) Bitumen

Add following at the end of sub-clause (a) and the properties of bitumen to be tested as mentioned below:

| Sl No | Characteristics | Paving Grade | | | | Method of Test,Ref to |
|---|---|---|---|---|---|---|
| | | VG 10 | VG 20 | VG 30 | VG 40 | |
| (i) | Penetration at 25°C,100g,5s,0.1 mm,Min | 80 | 60 | 45 | 35 | IS 1203 |
| (ii) | Absolute Viscosity at 60°C,Poise | 800-1200 | 1600-2400 | 2400-3600 | 3200-4800 | IS 1206(Part 2) |
| (iii) | Kinematic Viscosity at 135°C,cSt,Min | 250 | 300 | 350 | 400 | IS 1206 (Part 3) |
| (iv) | Flash Point(Cleveland open cup),°C,Min | 220 | 220 | 220 | 220 | IS 1448(P:69) |
| (v) | Solubility in trichloroethylene,percent,Min | 99.0 | 99.0 | 99.0 | 99.0 | IS 1216 |
| (vi) | Softening point(R&B),° C,Min | 40 | 45 | 47 | 50 | IS 1205 |
| (vii) | Tests on residue from rolling thin film oven test : | | | | | |
| | a)Viscosity ratio at 60°C,Max | 4.0 | 4.0 | 4.0 | 4.0 | IS 1206(Part 2) |
| | b)Ductility at 25°C,cm,Min | 75 | 50 | 40 | 25 | IS 1208 |

**Section 1400: KERBS AND FOOTPATHS**

**1401 CONCRETE KERBS**

**(5) Measurement**

Delete second sentence and replace with:

No separate measurement will be made for concrete foundation.

Add following after “foundation.” in third sentence of first paragraph:

Including cutting of existing pavement, if any

**(6) Payment**

Delete second paragraph\h and replace with:

No separate payment will be made for foundation concrete. It shall be deemed included in the payment of the kerbs.

**Section 1500 TRAFFIC SIGNS, ROAD MARKING, ROAD MARKER STONES AND DELINEATORS**

**1501 PERMANENT TRAFFIC SIGNS**

**(2) Material**

**(f) Retro-Reflective Sheeting**

Add paragraph at the end of sub-clause (f) Retro-reflective properties with the following content:

The retro-reflective property of the sheeting shall not be less than in the following table. The black patterns are made out of non-reflective vinyl sheeting.

Table 1501.1

| Observation Angle | Entrance Angle | White | Yellow | Red | Blue |
|---|---|---|---|---|---|
| 0.2 (i.e, 12’) | -4/5° | 185 | 126 | 44 | 12 |
| | 15° | 150 | 110 | 34 | 10 |
| | 30° | 100 | 57 | 25 | 4.6 |
| | 40° | 40 | 21 | 13 | 1.2 |
| 0.33 (i.e, 20’) | -4/5° | 130 | 94 | 31 | 6.2 |
| | 15° | 121 | 71 | 27 | 5.2 |
| | 30° | 90 | 53 | 26 | 3.4 |
| | 40° | 34 | 15 | 12 | 1.2 |
| 0.5 | -4/5° | 72 | 54 | 18 | 4 |
| | 30° | 68 | 42 | 17 | 2.7 |
| 1.0 | -4/5° | 22 | 18 | 6,3 | 1.3 |
| | 15° | 19 | 14 | 5.5 | 1.2 |
| | 40° | 14 | 7 | 3.3 | 0.4 |
| 2.0 | -4/5° | 9.2 | 5.8 | 3.3 | 0.6 |
| | 30° | 8.1 | 5.7 | 2.5 | 0.4 |
| | 40° | 6.3 | 3.4 | 2.4 | 0.3 |

**(4) Signs**

Add the following after the last sentence of the first paragraph

The height of all triangular signs and diameter of circular signs shall be 750 mm.

Replace the second paragraph with the following:

All permanent traffic signs shall be retro-reflective.

**(11) Payment**

Replace the second sentence by the following:

The contract unit rates shall be the full and the final compensation to the Contractor as per Clause 112 and also for the cost of production of the retro-reflective sign plate with back support frame, supply of support poles, excavation, concrete for foundation, erection of traffic signs, backfill and all other incidental work so as to complete the work.

**1507 DELINEATOR POSTS**

**(2) Material**

Add the following at the end of the paragraph:

The retro-reflective patches shall conform to that in Table 1501-1

**(4) Erection and painting**

Replace the Second sentence of third paragraph:

After the paint becomes dry, a white coloured retro-reflective patch of 100 mm x100 mm size is pasted on the side facing the traffic at 100 mm from the top. On the side facing the opposite traffic, a red coloured retro-reflective patch of 100 mm x100 mm size is pasted in the same way.

Alternatively, the patch could be made out of a retro-reflective paint.

**(6) Measurement**

Add "Concreting with M15," after "preparation of foundation," and before "backfill".

**(7) Payment**

Add "Concreting with M15," after "excavation," and before "backfill".

**1511 STEEL CRASH BARRIER**

Add in sub section 1511 (2)(c) table SN 2 in requirement column " for single W-beam barrier" after "1800 mm" and insert "Length of Post – 2050 mm for double W-beam."

Add sub section "1512 Gabion Safety Barrier" after sub section "1511 Steel Crash Barrier"

**1512 GABION SAFETY**

**BARRIER (1) General**

This work shall consist of furnishing and erection of stone filled wire crates (gabion) to function as barrier of dimensions and at locations as shown on the drawing(s) or as directed by the

Engineer in the same way as the Gabions as described under Clause 2401. The measurement and payment shall also be as per the same clause.

Add sub section "1513 Retro-reflective Paint" after sub section "1512 Gabion Safety Barier"

**1513 RETRO-REFLECTIVE**

**PAINT (1) General**

For night-time conspicuity, the end faces of the gabion boxes of the barrier and Metal Beam Crash Barrier shall be painted with a retro-reflective paint. The paint shall be used undiluted and should possess reflective property in Table 1501-1. The measurement and payment shall be on the basis of the square metres of painted area.

**Section 2000: CONCRETE FOR STRUCTURES**

**2003 MATERIAL FOR CONCRETE**

**(8) Admixtures**

Add additional bullet "(b) Crack controlling agent" at the end of bullet (a):

**(b) Crack Controlling Agent**

The contractor shall add triangular fibrous crack controlling agent as per manufacturer's specification and Engineer's instruction

**2006 TRANSPORTATION OF CONCRETE**

In the last paragraph delete from the end of first sentence "...shall not be longer than the initial setting time of the concrete" and substitute:

".. shall not be longer than 45 minutes. At the discretion of the Engineer, when the ambient air temperature is below 30 degrees Centigrade and conditions are suitable this period may be increased to 90 minutes but in no case shall it be longer than the initial setting time of the concrete."

**2007 PLACING OF CONCRETE**

**(3) Placing Procedures**

In the first sentence delete "...as nearly as possible in its final position." and substitute:

"...as nearly as possible to and in no case more than 3 metres from its final position."

Add to the 7th Paragraph as a final sentence.

"In no case shall concrete be discharged from such devices at a height of more than 1.5 metres above its place of final disposition."

Add new Sub-clause 2020: Plum Concrete

**2020 PLUM CONCRETE**

**(1) General**

This work may be required to fill scour holes, holes formed/noticed in existing structure, or to construct retaining structures as specified or directed.

**(2) Material and Construction Procedure**

The materials like ordinary Portland cement, sand, coarse aggregates, water, boulders to be used for this work shall confirm to the Sections 600 and 2000 of the Specifications.

Boulder shall be clean, hard no weather of about 150 mm size. They shall be sunk into water 24 hrs before use.

Composition of plum concrete, in general, will be 60 percent M20/20 grade concrete by volume and 40 percent boulders of 150 mm average size with/without 3% non-shrinking agent by weight of cement as the case may be.

The M-20 grade concrete for this work will need materials as specified in section 2000. Design of the concrete mixes, mixing, transportation, placing, compaction and curing etc shall be carried out following the provisions specified in section 2000 of the specifications. The place or space to be filled with the concrete must be cleaned properly and chipped if possible so as to provide adhesion.

Plum concrete would be placed by laying down a bed of concrete mix in about 75mm thick layer, placing in a layer of boulders (ensuring minimum clear spacing of 40mm between stones), overtopping and surrounding the boulders with another layer of concrete, and then continuing the process of placing alternate layers of boulders and concrete until the desired top of pour is reached

Addition of suitable additives will be done at the time of mixing and preparing concrete. The concrete is then cured as in concrete works.

**(3) Measurement**

Plum concrete work shall be measured in cubic meter to the lines and levels shown on the drawing or as directed by the Engineer. Formworks shall be separately measured and paid.

**(4) Payment**

Payment will be made at the contract unit price for quality as measured above and shall be full compensation for all the activities required including supply of materials and use of labors and equipment to complete the work in all respect specified otherwise.

**2402 MECHANICALLY WOVEN CRATES (GABIONS AND MATTRESS)**

**(3) Construction of Gabions**

**(a) General Requirements**

Add as additional last paragraph:

"Where salvaged materials are to be used they shall meet the requirements of this Specification and are subject to written approval of the Engineer"

### (8) Measurement

Delete whole content of (8) Measurement and replace with the following:
Gabions masonry work shall be measured in cubic meters in their final positions to the lines, grades and levels shown on the drawings or as directed by the engineer and be verified with their tolerances.

### (9) Payment

Delete whole content of (9) Payment and replace with the following:

The quantity of the gabions masonry work measured as provided above shall be paid at the contract unit price per cubic meter.

The contract unit price for gabions will be considered full and final compensation to the Contractor for all expenditure incurred in providing and placing machine made gabion wire mesh boxes and mattresses, including binding wires, selvedge wire and tension wires. It also considers stone filling in gabions including fixing of gabions in position, tying with binding wires and tension wires and preparation of the bottom foundation to the lines and in levels shown on the drawings or as directed by the Engineer and in accordance with the Drawings, Standard Specification and Special Specifications.

The payment for gabion masonry work shall be made in two (2) installments. First installment 80% of the unit rate quoted in the BOQ shall be made after the construction of gabion masonry structures. The second instalment20% of the unit rate quoted in the BOQ shall be made after carrying out the backfilling of the structures as per the Specifications and to the satisfaction of the Engineer along with the payment of the backfill works.

Add new Sub-clause 2417:

## 2417 Construction of Geogrid Reinforced Earth Wall

### 1. Scope

This section covers material properties, construction procedures, test and standard of acceptance, method of measurement, and payment of Geogrid reinforced earth walls at locations shown on the drawing or as instructed by the Engineer. It includes different components like backfill, facing unit, geo-textile, drainage and other which are involved in the construction of Geogrid Reinforced earth wall.

### 2. Material Properties

#### 2.1. Geogrid

The primary soil reinforcement shall be high strength flexible member named Geogrid with a high quality coating like LDPE or equivalent. Latex or PVC coating or geotextile shall not be permitted. The selection of the geogrid need to be strictly based on the long term design strength values for a design life of 120 years at 30°C.
The primary soil reinforcement shall conform to the details given in Table 1.The Ultimate tensile strength values indicated in Table 1 are short term, which needs to be reduced to long term strength for design purpose by applying suitable partial material factors or reduction factors (RF) as explained here under. The selection of the geogrid need to be strictly based on the long term design strength values for a design life of 120 years at 30°C.

Table 1 – Long Term Design Strength of Geogrids

| Geogrid Grade | 1 | 2 | 3 | 4 | 5 | 6 | 7 | 8 | 9 | 10 |
|---|---|---|---|---|---|---|---|---|---|---|
| Ultimate Tensile strength corresponding to 12% strain (kN/m) | 100 | 200 | 300 | 400 | 500 | 600 | 700 | 800 | 1000 | 1250 |
| Long Term Design Strength at 30°C Temperature for 120 year design life (minimum) (kN/m) | 59 | 119 | 192 | 256 | 320 | 384 | 454 | 519 | 649 | 811 |
| Roll Width (minimum) (m) | 4.5 | 4.5 | 4.5 | 4.5 | 4.5 | 4.5 | 4.5 | 4.5 | 4.5 | 4.5 |

NOTE:
Tensile strength per metre should be based on tests performed as per international standard ISO 10319 test procedure.

The long term design strength shall be derived as per guidelines given in international standard technical report ISO TR 20432 for design life of 120 years and design temperature of 30°C considering following factors

$T_{allow} = T_{UTS} / R_F$

$R_F = RF_{CR} \times RF_{ID} \times RF_W \times RF_{CH} \times F_S$

$T_{allow}$ = Allowable tensile strength

$T_{UTS}$ = Ultimate tensile strength

$R_F$ = Reduction factor

$RF_{CR}$ = Reduction factor for creep

$RF_{ID}$ = Reduction factor for the effect of installation damage

$RF_W$ = Reduction factor for weathering

$RF_{CH}$ = Reduction factor environmental degradation (chemical and biological) at the service temperature

$F_S$ = Reduction factor related to the mass of information available and to the production quality.

Use of default reduction factors mentioned in codes like FHWA (Federal Highway Administration) or MoRTH (Ministry of Road Transport and Highways, India) shall not be permitted. The adoption of reduction factors should be strictly based on reliable test data and performance data available with the manufacturer from accredited independent agency or the manufacturer should provide a valid third party accredited certification like BBA (British Board of Agreement) certifying the Reduction Factor (RF) value for their geogrid for design temperature of 30°C and design life of 120 years. Manufacturer should have creep test data from independent accredited laboratory for period over 10 years at design temperature of 20°C.

### 2.2. Granular backfill

The structural backfill consist of granular stones and soil. The material should be free draining and devoid of dirt and deleterious material. It shall be of good quality, free draining granular soil and plasticity index should be less than 6. The percentage of fines passing 75 micron sieve should not be greater than 15%. The maximum particle size in the structural fill shall not be more than 75 mm.

### 2.3. Facing unit (Gabion)

These units are fabricated soft flexible heavily galvanized and PVC coated double twisted steel woven wire mesh units (Figure 1) with opening size 10 X 12 cm, wire mesh diameter 2.7/3.7mm,(inner /outer diameter), mechanically edged/selvedged with partitions at 1m interval, tying with lacing wire of diameter 2.2mm/3.2mm (inner / outer diameter). The facing section of the unit is formed by connecting the back panel and a diaphragm to the main unit. This creates rectangular shaped cells used for stone confinement. The facing unit consists of integrated tail which acts as secondary reinforcement.

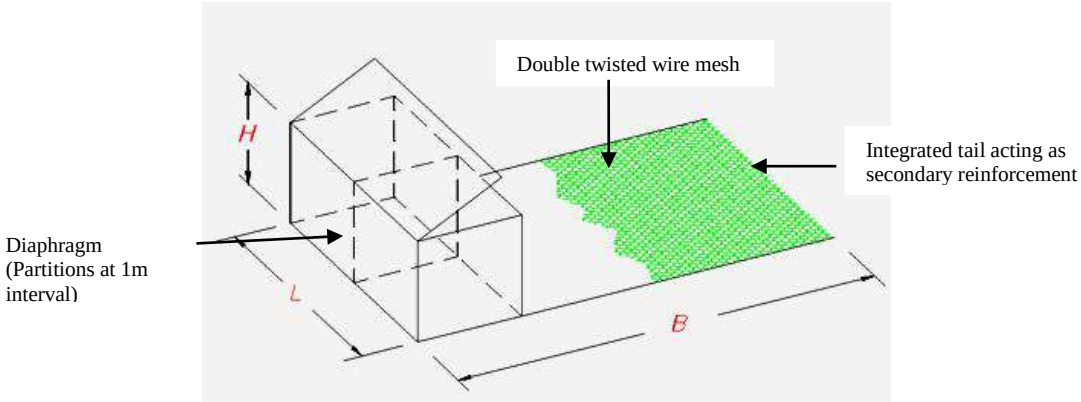


**Figure 1**

The details of the requirements for wire, coatings, mesh size and tolerances are discussed below.

*2.3.1 Wire*

All tests on the mesh, lacing wire and selvedge wire must be performed prior to manufacturing the mesh.

*Tensile strength:* The wire used for the manufacture of Mesh shall have a tensile strength minimum 350 N/mm$^2$ in accordance with IS 280 (indian standard mild steel wire for general engineering purposes). Wire tolerances (Table 1) shall be in accordance with IS 16014:2012 (Class T1).

*Elongation:* Elongation shall not be less than 10%, in accordance with indian standard IS 16014:2012 and MoRTH (Fifth Revision) Clause 3100. Test must be carried out on a sample at least 20 cm long.

*2.3.2 Zinc Coating*

- Zinc coating: The wire shall have minimum quantities of Zinc shown in Table 1.
- Adhesion of zinc coating: The adhesion of the zinc coating to the wire shall be such that, when the wire is wrapped six turns around a mandrel having four times the diameter of the wire, it does not flake or crack when rubbing it with the bare fingers in accordance with IS 4826:1979.

*2.3.3 PVC Polyvinyl Chloride) Coating*

*PVC coating thickness: Nominal* **–** 0.5 mm, Minimum – 0.4 mm;
*Specific weight: 1.3 kg/dm$^3$* – 1.35 kg/dm$^3$ in accordance with IS 13360, Part3, section 1.
*Hardness:* between 50 and 60 Shore D, according to IS 13360, Part5, section 11
*Tensile strength*: Higher than 20.6 MPa, according to IS 13360, Part5, section 1
*Elongation at break:* not less than 200% in accordance with IS 13360, Part5, section 1.

*2.3.4 Wire mesh (10x12 mesh type):*

*Mesh wire:* Diameter – 2.70 mm zinc coated wire inside PVC coating and 3.70 mm when measured with external PVC coating;(ID/OD - 2.7mm/3.7mm)

*Selvedge and reinforcement steel wire:* Diameter – 3.40 mm zinc coated wire inside PVC coating and 4.40 mm when measured with external PVC coating;(ID/OD - 3.4mm/4.4mm).

*Mesh opening*: Nominal Dimension D = 100mm, as per Fig. 2

Tolerances in Mesh Opening size: - 4% to +16%

Mesh shall have minimum 10 numbers of mesh openings per meter of mesh perpendicular to twist of mesh.

Procedure for verification of mesh opening

a. Reinforced gabion facia shall be unfolded on the plain ground.
b. Any shrink in the unfolded Gabion Mesh shall be removed, by stretching the Mesh panel.
c. Marking on the ground shall be made from the Centre of the twist of one mesh and the second. Marking shall be done at 1 m distance.
d. The number of mesh Openings in the 1 m shall be counted & verified.

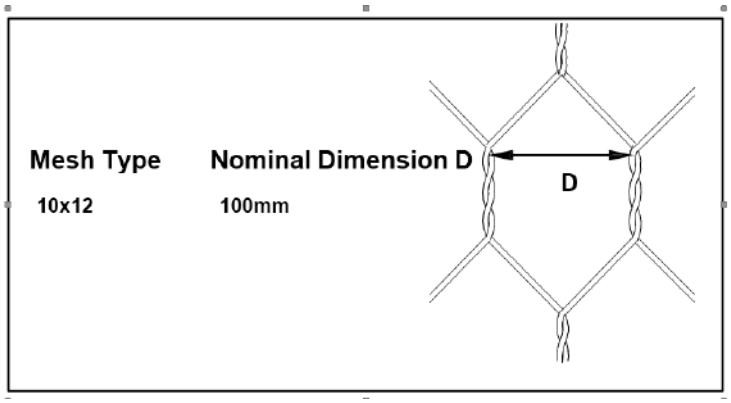


**Figure 2**

*2.3.5 Tolerances*

*Wire*: The wire shall meet diameter tolerance and minimum zinc coating requirement mentioned in the following table.

Gabion facia and tail unit tolerance: ± 5 % on the length, width, and height.

Table 1– Diameter tolerance and minimum zinc coating requirement of wire

| Internal Wire Dia mm | 2.2 mm | 2.7 mm | 3.4 mm |
|---|---|---|---|
| Wire Tolerance(±)mm | 0.06 | 0.06 | 0.07 |
| Minimum Qty of Zinc (gm/m$^2$ ) | 230 | 245 | 265 |

*2.3.6. Standard size*

Gabion facia and tail with double twist hexagonal mesh units shall have the following dimensions.

Table 2: Dimensions of gabion facia units

| Length of reinforcement (B), m | Width (L), m | Height (H), m |
|---|---|---|
| 3 | 3 | 1 |
| 4 | 3 | 1 |
| 5 | 3 | 1 |

| Length of reinforcement (B), m | Width (L), m | Height (H), m |
|---|---|---|
| 6 | 3 | 1 |
| 7 | 3 | 1 |
| 3 | 3 | 0 |
| 4 | 3 | 0 |
| 5 | 3 | 0 |
| 6 | 3 | 0 |
| 7 | 3 | 0 |

*2.3.7. Fabrication*

Gabion facia and tail with double twist hexagonal mesh units shall be manufactured with all components mechanically connected at the production facility. The external face, reinforcing panel, and lid of the unit shall be woven into a single unit. The ends, back, and diaphragm shall be factory connected to the base. All perimeter edges of the mesh forming the basket shall be selvedge with wire having a larger diameter.

The facing element of a Gabion facia and tail with double twist hexagonal mesh unit is divided into two cells by means of a diaphragm positioned at approximately 1 m centres. The diaphragm shall be secured in position to the base so that no additional lacing is necessary at the job-site.

### 2.4. Geo-textile

The non-woven geotextile is recommended to use as separator between the facia unit and the structural backfill. For details refer Standard specifications for road and bridge works Section 627.

### 2.5. Sub surface drainage

Walls shall be provided with subsurface drainage measures as shown on the working drawings. As a minimum, an underdrain system shall be provided for leading subsurface and surface water away from the backfill and outside the limits of the wall. Specification for Geocomposite drains used for subsurface drainage are given here.

Work shall consist of furnishing and placing a geosynthetic drainage system as a subsurface drainage media for reinforced soil slopes.

The specific drainage composite material and supplier shall be preapproved by the Agency.The geocomposite drain shall be a composite construction consisting of a supporting structure or drainage core material surrounded by a geotextile. The geotextile shall encapsulate the drainage core and prevent random soil intrusion into the drainage structure. The drainage core material shall consist of a three dimensional polymeric material with a structure that permits flow along the core laterally. The core structure shall also be constructed to permit flow regardless of the water inlet surface. The drainage core shall provide support to the geotextile. The core and fabric shall meet the minimum property requirements listed in Table S3 of FHWA-NHI-10-024 (given in Section 4.5 of this specification).

A geotextile flap shall be provided along all drainage core edges. This flap shall be of sufficient width for sealing the geotextile to the adjacent drainage structure edge to prevent soil intrusion into the structure during and after installation. The geotextile shall cover the full length of the core. The geocomposite core shall be furnished with an approved method of constructing and connecting with outlet pipes or weepholes as shown on the plans. Any fittings shall allow entry of water from the core but prevent intrusion of backfill material into the core material.

## 3. Construction of Geogrid reinforced earth wall

### 3.1. Site Preparation

Prior to the installation of the reinforced earth wall, the site area should be flat with stable base and enough in bearing capacity as recommended. Mainly the leveling the foundation soil, construction of concrete leveling pad at the toe, installing facing units in the front, laying geogrid in layers, filling with granular material with proper compaction and provision of drainage need to be focused. Step by step explanations are explained in section below.

### 3.2. Installation of Geogrid (Primary soil reinforcement)

1. Care should be taken in the handling, lifting and positioning of geogrid rolls. Since the weight of the rolls is high, mechanical lifting arrangements are necessary. This should be done using a lifting beam.
2. To ease the laying, and proper performance of the geogrid, the formation on which it is to be laid should be flat without ruts and sharp undulations.
3. Leveling pads shall be constructed of unreinforced concrete as shown on the working drawings. Gravel leveling pads shall not be allowed. As a minimum, the concrete for leveling pads shall have strength of M 15. Cast-in-place leveling pads shall be cured for a minimum of 24 hours before placement of wall facing.
4. The structural backfill should be compacted in a layer of 30cm to minimum of 95% of maximum density and within ±2% of optimum moisture content. Compaction moisture contents dry of optimum are recommended. When compacting wall fill within 1m from the facing, a hand operated vibratory compactor is needed.
5. Subsurface drainage shall be provided depending upon site condition to ensure that no hydrostatic pressure develops within structural backfill.
6. The rolls should be placed near the facia and started to roll back perpendicular to the wall direction as shown in the construction drawings.
7. The roll should be unwound a small amount by pushing the roll in the direction of the tensile strength requirement. The base end of the geogrid now exposed should be secured by weighting or pinning it to the formation. The roll should then be unwound carefully ensuring that no slack or undulations occur in the geogrid as it is laid. If these do occur they should be corrected immediately before proceeding. When the roll is completely unwound the free end of the geogrid should be hand tightened and secured by weighting or pinning.
8. The run of primary soil reinforcement should be reasonably straight and all elements should be flat and not twisted. No undulations in the geogrid should be evident.
9. There shall not be any active connection between primary soil reinforcement and secondary soil reinforcement by means of joining. The stress transfer shall happen by the frictional interaction between the primary and secondary soil reinforcement. For this, a minimum overlap length of 3m shall be provided between the primary and secondary soil reinforcement. (Figure 3).
10. Minimum overlap of 10cm shall be provided between two adjacent rolls of the primary soil reinforcement geogrid. Joining of different rolls in tensile stress direction of the structure shall not be permitted (Figure 3).

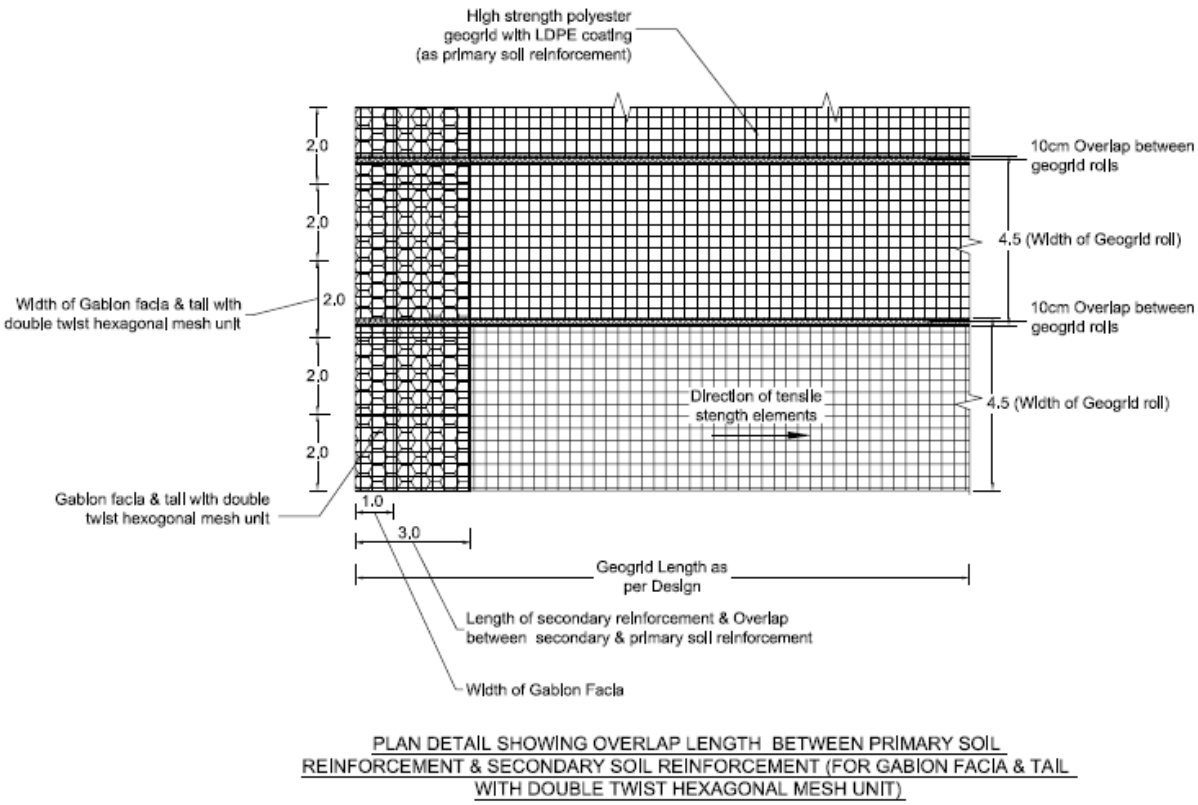


**Figure 3 Detail showing overlap length between primary and secondary reinforcement**

## 3.3. Placing of gabion facia with integrated tail as secondary reinforcement

### *3.3.1 Assembly*

Gabion facia and tail with double twist hexagonal mesh units are supplied folded flat and packed in bundles. The facing section of the units are assembled individually by erecting the sides, back, ends, and diaphragm, ensuring that all panels are in the correct position, and the tops of all sides are aligned. The four corners of the basket shall be connected first, followed by the internal diaphragm to the outside walls. All connections shall be made using lacing wire or ring fasteners. The procedure for using lacing wire consists of cutting a sufficient length of wire, and first looping and/or twisting to secure the lacing wire to the wire mesh. Proceed to lace with alternating double and single loops through every mesh opening approximately every 150 mm pulling each loop tight and finally securing the end of the lacing wire to the wire mesh by looping and/or twisting. Refer following Figure.

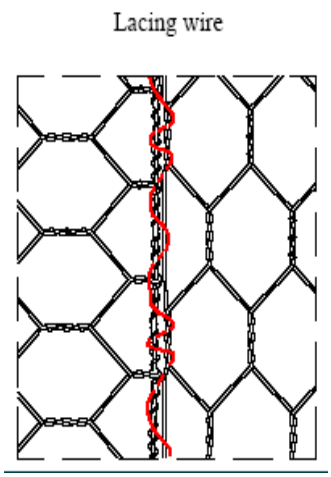


**Figure 4 Lacing wire**

The use of ring fasteners shall be in accordance with the manufacturer's recommendations.

Following assembly of the facing section the reinforcing panel shall be unfolded to the required length and the shipping folds removed. Folds can be removed by placing the fold over a 50 mm x 100 mm board and walking along the sides.

*3.3.2. Installation of units*

Prior to installing the assembled units, the foundation on which these units are to be placed shall be cut or filled and graded to the lines and grades shown on the construction drawings. Surface irregularities, loose material, and vegetation shall be removed during the preparation of the foundation. Leveling pads made of concrete should be constructed as described in Section 3.2.
The units are carried to their final position and connected with the adjoining empty units along the vertical and top edges of their contact surfaces using the same connecting procedure(s) described in Section 3.3.1. Whenever a structure requires more than one layer of units, the upper layer shall be connected to the top of the lower layer along the front and back edges of the contacts.

*3.3.3 Internal Connecting Wires*

Internal Connecting Wires shall connect the exposed face of a cell to the opposite side of the cell. An exposed face is any side of a gabion cell that will remain exposed or unsupported after the structure is completed. Lacing wire or prefabricated internal connecting wires shall be used as internal connecting wires.

*3.3.4 Filling in gabion facia*

Boulderes used in gabion facia units shall be hard, angular or round, durable which shall not disintegrate on exposure to water or weathering during the life of the structure.
At the rare end of facia unit, non woven geotextile is to be provided as the separator.

*3.3.5 Placement of the Structural Backfill*

The granular backfill specified by the engineer shall be installed in lifts of approximately

30 cm, and dumped in the middle section of the Geogrid. Compacting is to precede parallel to the wall, ensuring that the compacting machine does not come in contact with the geogrid or within 1 m of the rear of the face section. The homogeneity of the backfill and the level of compaction required shall be verified. For detail refer section 3.2.

*3.3.6 Lid Closing*

Once the baskets are completely full, the lids shall be pulled tight until the lid meets the perimeter edges of the basket. A tool like a lid closer can be used. The lid must then be tightly laced and/or fastened along all edges, ends, and tops of diaphragm(s) in the same manner as described in the above sections.

*3.3.7 Mesh Cutting and Folding*

Where shown on the drawings or otherwise directed by the engineer, the Gabion facia and tail with double twist hexagonal mesh units may be cut, folded and fastened together to suit existing site conditions. The mesh must be cleanly cut and surplus mesh either folded back or overlapped so that it can be securely fastened together with lacing wire or fasteners in the manner described earlier. Any reshaped Gabion facia and tail with double twist hexagonal mesh units shall be assembled, installed, filled and closed as specified in the previous sections.

**3.4. Construction of geocomposite subsurface drain**

*3.4.1 Delivery, Storage, and Handling:*

The Contractor shall check the geosynthetic drainage composite upon delivery to ensure that the proper material has been received. During all periods of shipment and storage, the geosynthetic drainage composite shall be protected from temperatures greater than 140° F (60° C), mud, dirt, and debris.

Follow manufacturer's recommendations in regards to protection from direct sunlight. At the time of installation, the geosynthetic drainage composite shall be rejected if it has defects, tears, punctures, flaws, deterioration, or damage incurred during manufacture, transportation, or storage. If approved by the Engineer, torn or punctured sections may be removed or repaired. Any geosynthetic drainage composite damaged during storage of installation shall be replaced by the Contractor at no additional cost to the Owner.

*3.4.2 Placement:*

The soil surface against which the geosynthetic drainage composite is to be placed shall be free of debris and inordinate irregularities that will prevent intimate contact between the soil surface and the drain.

*3.4.3 Seams:*

Edge seams shall be formed by utilizing the flap of geotextile extending from the geocomposite's edge and lapping over the top of the geotextile of the adjacent course. The geotextile flap shall be securely fastened to the adjacent fabric by means of plastic tape or non-water-soluble construction adhesive, as recommended by the supplier. Where vertical splices are necessary at the end of a geocomposite roll or panel, a 8-inch (200-mm)-wide continuous strip of geotextile may be placed, centered over the seam and continuously fastened on both sides with plastic tape or non water soluble

construction adhesive. As an alternative, rolls of geocomposite drain material may be joined together by turning back the geotextile at the roll edges and interlocking the cuspidations approximately 2 in. (50 mm). For overlapping in this manner, the geotextile shall be lapped over and tightly taped beyond the seam with tape or adhesive. Interlocking of the core shall always be made with the upstream edge on top in the direction of water flow. To prevent soil intrusion, all exposed edges of the geocomposite drainage core shall be covered by tucking the geotextile flap over and behind the core edge. Alternatively, a 1 ft (300 mm) wide strip of geotextile may be used in the same manner, fastening it to the exposed fabric 8 in. (200 mm) in from the edge and fold the remaining flap over the core edge.

*3.4.4 Repairs:*

Should the geocomposite be damaged during installation by tearing or puncturing, the damaged section shall be cut out and replaced completely or repaired by placing a piece of geotextile that is large enough to cover the damaged area and provide a sufficient overlap on all sides to fasten.

*3.4.5 Soil Fill Placement:*

Structural backfill shall be placed immediately over the geocomposite drain. Care shall be taken during the backfill operation not to damage the geotextile surface of the drain. Care shall also be taken to avoid excessive settlement of the backfill material. The geocomposite drain, once installed, shall not be exposed for more than seven days prior to backfilling.

## 4. Test and Standard of Acceptance

### 4.1. Geogrid

Tensile strength test shall be done on one sample per every 20,000 sqm of geogrid supplied. Manufacturer of the geogrid should provide “Manufacturers Test Certificate” for the tensile strength of geogrid elements.

In case of failure of any test /or contractor desire to source material from more than one manufacturer, the cost of visit in respect of additional source or visit for retesting by client and consultant shall be borne by Contractor. The cost of Airfare to & fro, Lodging& Boarding, shall be borne by contractor. It is not advisable to use geogrid of different characteristics and inherent material properties together and that should not be allowed.

*Eligibility criteria- Manufacturer*

The manufacturer of the geo grid should have in-house facility to test the tensile strength of the geogrid.

The manufacturer should be able to supply the material continuously without any break or delay to the project. Manufacturer of geogrid should provide a performance bond for material for minimum 5 years to the client. Manufacturer should undertake for site supervision during the execution of geogrid work. A copy of contract specification shall also be provided to manufacturer to confirm that his material conforms to the specification for material and placement of primary reinforcement.

The Manufacturer / Supplier should not have a history of poor performance such as abandoning the works, financial failures, blacklisting. If it is observed, Manufacturer / Supplier will be automatically disqualified.

### 4.2. Granular Backfill

Refer section 2.2

### 4.3. Facing unit

The material should get approval from the client before the actual supply start. The manufacturer of the Gabion facing unit should provide “Manufacturers Test Certificate’ and Quality Conformity Certificate for the material with every lot/shipment. Tensile strength test and zinc coating test on basic wire shall be done on one sample per every 10,000 numbers of units supplied.

The punch strength test results shall be 19 kN in accordance with MoRTH section 2500 and test specified therein.

*4.3.1 PVC Coating Thickness:*

The thickness of the PVC coating shall be determined on a randomly chosen individual piece of wire removed from the coil at 3 places 1 metre apart.
Measure with a micrometer the diameter of the galvanized steel wire with PVC coating. Determine the thickness of the PVC coating by stripping the PVC coating from the wire and measure the reduced diameter with a micrometer. The thickness of the coating is the difference between the diameter of the galvanized steel wire with PVC coating and the measured diameter of the galvanized steel wire divided by two. The thickness values should be as per clause 2.3.3. While removing the pvc coating by stripping, take care not to remove any of the metallic surface.

*4.3.2. Selvedge strength test:*

A tensile test on mesh sample shall be carried out in order to estimate selvedge strength test. The test shall be carried out as per procedure outlined below. The selvedge strength shall be minimum 25 kN/m.

a. Take a double twisted mesh of approximately 1.0 m width.
b. The height of the sample shall be such that after selvedging on both the sides (1m), there shall be at least two mesh repetitions between the two selvedged wires, so that effective height of the sample shall be more than 300 mm.
c. Sample shall be loaded on the UTM (Universal testing machine) in a direction parallel to twist, with the samples being gripped at the two selvedged wires & not mesh twist.
d. The distance between the two selvedge wires shall be recorded as Initial gauge length.
e. Distance between the two end gripping points (pins) along the width of the sample shall be recorded as the unit width under test. The width shall be at least 700 mm.
f. The load shall be applied gradually to the sample and the test be continued till the break point.
g. The peak load and the % elongation shall be recorded.
h. The strength of the selvedge connection shall be (peak load/unit width under test) expressed in kN/m.

NB. If the sample slips at any of the gripping point during the test, such a test shall be discarded and a new sample shall be taken**.**

*4.3.3. Eligibility of Manufacturer*

The Manufacturer of Gabion facia with integrated tail mesh shall have:

- In-house facility in the manufacturer’s plant in Nepal or abroad to test the tensile strength of the basic wire which forms mechanically woven double twisted mesh panels.

- In-house test facility in the manufacturer's plant in Nepal or abroad for zinc coating test.
- In-house facility in the manufacturer's plant in Nepal or abroad to test selvedge strength and mesh panel strength.
- Proven experience in supplying and designing for structures with composite soil reinforcement systems with gabion facia in Nepal or abroad, in which gabion is one of facia component for a minimum height of 30m, with supporting documentary evidence.
- The supplier shall produce performance certificate of Gabion facia with integrated tail of at least 10 year old structure from government department of Nepal or abroad.
- The Manufacturer / Supplier shall be manufacturing / supplying the system in Nepal or abroad for more than 10 years from the date of this tender notice.
- In-house design capability & same shall be ISO9001:2008 certified by an internationally accredited organization.
- Manufacturer of mesh should provide a performance bond for material for minimum 5 years to the client.
- Manufacturer should undertake for site supervision during the execution of RS wall work. The Manufacturer / Supplier should not have a history of poor performance such as abandoning the works, financial failures, blacklisting. If it is observed, Manufacturer / Supplier will be automatically disqualified.

### 4.4. Geotextile

Refer Standard specifications for road and bridge works Section 627.

### 4.5. Geosynthetic drainage composite for subsurface drainage

The Contractor shall submit a manufacturer's certification that the geosynthetic drainage composite supplied meets the design properties and respective index criteria measured in full accordance with all test methods and standards specified. The manufacturer's certification shall include a submittal package of documented test results that confirm the design values. In case of dispute over validity of design values, the Engineer can require the Contractor to supply design property test data from an approved laboratory, to support the certified values submitted. Minimum average roll values, per ASTM D4759, shall be used for conformance.

| Table S3. Minimum Physical Property Criteria For Geosynthetic Drainage Composites In Reinforced Soil Slopes | | |
|---|---|---|
| **PROPERTY** | **TEST METHOD** | **VALUE[1]** |
| Composite: | | |
| Flow Capacity[2] | ASTM D4716 | $ft^2/s$/ unit width (min) |
| Geotextile: | | |
| AOS[3] | ASTM D4751 | ___ Max. Diameter (mm) |
| Permeability[4] | ASTM D4491[5] | _____ cm/s |
| Trapezoidal Tear<br>CLASS 2[6]<br>CLASS 3[7] | ASTM D4533 | <br>56 lb (250 N)<br>40 lb (180 N) |
| Grab Strength<br>CLASS 2[6]<br>CLASS 3[7] | ASTM D4632 | <br>160 lb (700 N)<br>110 lb (500 N) |
| Puncture<br>CLASS 2[6]<br>CLASS 3[7] | ASTM D6241 | <br>310 lb (1375 N)<br>40 lb (180 N) |
| | | |

Notes:

1. Values are minimum unless noted otherwise. Use value in weaker principal direction, as applicable. All numeric values represent minimum average roll values.
2. The flow capacity requirements for the project shall be determined with consideration of design flow rate, compressive load on the drainage material, and slope of drainage composite installation.
3. Both a maximum and a minimum AOS may be specified. Sometimes a minimum diameter is used as a criterion for improved clogging resistance. See FHWA Geosynthetic Design and Construction Guidelines (Holtz et al., 2008) for further information.
4. Permeability is project specific. A nominal coefficient of permeability may be determined by multiplying permittivity value by nominal thickness. The k value of the geotextile should be greater than the k value of the soil.
5. Standard Test Methods for Water Permeability (hydraulic conductivity) of Geotextiles by Permittivity.
6. CLASS 2 geotextiles are recommended where construction conditions are unknown or where sharp angular aggregate is used and a heavy degree of compaction (95% AASHTO T99) is specified.
7. CLASS 3 geotextiles (from AASHTO M-288) may be used with smooth graded surfaces having no sharp angular projections, no sharp aggregate is used, and compaction requirements are light (<95% AASHTO T99).

## 5. Method of Measurement

### 5.1. Geogrid (Primary reinforcement)

Quantities of primary soil geogrid reinforcement shall be determined from cross sections and the linear distance of the structure. The measurement shall be in square meters for different grades of geogrid, measured in their final position in plan area. Site specific design and material availability will determine the actual grade of geogrid to be used.

### 5.2. Backfill material

Quantities of granular backfill material shall be determined from cross sections and the linear distance of the structure. The granular backfill material is measured in cubic metre.

### 5.3. Gabion Facing Unit with secondary reinforcement

Quantities shall be determined from cross sections and the linear distance, and paid for under the appropriate bid items.
The quantity to be paid for “gabion facia and mechanically woven, double twisted, hexagonal shaped Zn+PVC coated steel wire mesh tail as reinforcement” shall be the number of units measured in their final position. Project conditions and design will determine the actual size of units to be used.
The bid price shall include the in place cost of all materials, equipment, and labour, including gabion facia and integrated tail mechanically woven, double twisted, hexagonal shaped Zn+PVC coated steel wire mesh tail as reinforcement.

### 5.4. Geotextile

Quantities of geotextile shall be determined from typical cross sections and the linear distance of the geogrid reinforced earth wall structure. The quantity of geotextile is measured in square meter basis.

### 5.5. Geocomposite for subsurface drainage

Measurement of geosynthetic drainage composite is on a square meter basis and will be computed on the total area of geosynthetic drainage composite shown on the construction drawings, exclusive of the area of drainage composite used in any overlaps. Overlaps, connections, and outlets are incidental items. Quantities of drainage composite material as shown on the plans may be increased or decreased at the direction of the Engineer based on construction procedures and actual site conditions. Such variations in quantity will not be considered as alterations in the details of construction or a change in the character of work.

## 6. Basis of Payment

- Geogrid (primary soil geogrid reinforcements): Accepted Geogrid (primary soil geogrid reinforcements) will be paid per square meter quantity of various grades for each pay item included in the contract.
- Granular Backfill: Refer Standard specifications for road and bridge works Section 918
- Facing unit : Accepted gabion facia and integrated tail mechanically woven, double twisted, hexagonal shaped Zn+PVC coated steel wire mesh tail as reinforcement unit will be paid for at the unit price for each pay item included in the contract.
- Geotextile: Refer Standard specifications for road and bridge works Section 634
- Drainage composite for sub surface drainage: The accepted quantities of drainage composite material will be paid for per square meter in place.

Add new Sub-clause 2418:

## 2418 Special Specification for Landslide Stabilization Works

### 1. GROUND ANCHORS, SOIL NAILS, ROCK BOLTS AND ROCK DOWELS

**Specification**

Support works include ground anchors, soil nails, rock bolts and rock dowels. The support works are provided to retain and to stabilize structures such as retaining walls, drains, rock slopes, soil slopes and to support rock nets, rock fences etc. The support elements may be vertical or at a horizontal inclination of 15 to 45 degrees as shown in the details in the drawings.

Two types of drillings are specified for support works:

1. Rock or soil drilling works are specified to install support elements of up to 1.5m in length. The drilling can be made using conventional pneumatic jack hammers or self-propelled Pionjar machines using 34mm or larger rock drill bits, and
2. Rock or soil drilling works for deeper holes more than 1.5m to 25m are to be made by appropriate horizontal drilling machines such as Lumesa or equivalent using pneumatic or other driving systems. The soil / rock strata may require different types of drill bits and a part or whole of the drill hole may required casings to protect drill hole wall.

Depending on the drilling methods specified, two separate items of works are provided in the Bill of Quantities.

Drilling for anchor holes shall either be made through pre-installed HDPE casing across the wall section and may require casing pipes at hard or soft rock or loose overburden soil material including active slide material. It is anticipated that no casing shall be required at the fixed anchor zone at the far end of the support element. The drilling may encounter heterogeneous colluvial or alluvial material with unstable boulders and debris at most of the support element's length. Bore hole log shall be prepared on the basis of fast drilling and shall be submitted to the Engineer before installation of the support element tendon (bar or cable) system.

The soil nails or rock bolts shall comply with the DIN 4125, FWHA Circular 7, IRC Highway Research Board Report No. 23 or other prevailing international standards and bar tendons shall be DYWIDAG, McALLOY, IS Fe 500D or approved equivalent type with yield strength of at least 500 MPa with nominal diameter of 32 mm or 25 mm as indicated in the drawing. The required length shall be reached by coupling several 3 m or 5 m pieces. Anchor end plates shall be of structural steel conforming to ASTM A36 or equivalent with minimum dimensions of 250x250x25 mm as shown in the drawings. The coupling and end nuts or lock nuts shall be compatible to the bar tendon and the joint strength shall be same as that of the bar tendon. Lengths of bar tendons shall be as directed by the Engineer but shall not be smaller than that indicated in the drawings. It is anticipated that the bar tendon lengths shall be normally in the range of 1.5-25 m unless otherwise dictated by the site condition, availability of reasonable fixed anchor zone and stability.

All bar tendons shall be fully grouted throughout its length between far end of the bore hole to the head plate. The grouting shall comply with DIN 4227 or other cement grouting standards with gravity or light pressure pumping. The cement for grouting shall be ordinary portland cement and shall comply with the provisions of the Standard Specifications for Road and Bridge Works. The water cement ratio at fixed anchor zone shall be between 0.40 and 0.45. Free anchor zones are grouted with lean grout with water cement ratio of 0.8. Where fixed and free anchor zones are not specified, the grouting shall be first grouted with lean grout with water cement ratio of 0.8 followed by water cement ratio of 0.40 to 0.45.

Minimum compressive strength of grout from cylinder testing shall be as follows for fixed anchor zone.

| | |
|---|---|
| 3 days | 10 N/mm2 |
| 7 days | 14 N/mm2 |
| 28 days | 20 N/mm2 |

Approved commercial grade of extra fine aluminium powder in an amount not exceeding 0.005% by mass of cement may be blended with cement to ensure expansion of cement grout at fixed anchor zone.

Prior to grouting, the grout mixture shall be mixed for a minimum time of 3 minutes. The grout shall be used as soon as possible after thoroughly mixing all ingredients. If aluminium powder is added the time shall not exceed one hour after addition of aluminium powder to the cement and water.

Grout shall be forced into the borehole continuously to fill the entire length of the borehole up to the anchor head. The injector pipes shall be taken out gradually during grouting process ensuring the end point at all times immersed with at least 1 m at grout mass. Where casing pipes are used to support bore hole wall, the casing pipe shall be pulled out during the grouting process so that entire length of bar tendon is properly filled with the cement grout.

The amount of grout mix used per borehole shall be recorded. Additional grouting shall be made to ensure filling of all voids before and after fixing the anchor head assembly. The anchors shall be tightened with a bedding pressure of about 10% of the working load, i.e., 25 kN (2.5 tonnes).

Backfill behind the anchored structure shall be made after completion of the anchor system so that they may develop stress due to movement of the structures during compaction of the backfill.

The exact length of passive bar tendons shall be decided by the Engineer after further confirmatory investigation and boring records. The length of anchors shall be 1.5-25m as shown in the drawings at minimum but shall be adjusted. Any adjustment in the length of bar tendons or dowels shall be as approved by the Client upon recommendation of the Engineer.

Where bar tendons are extended to make the length of the support works, the bar tendon segments shall be connected using proper couplings. In general coupling lengths shall be such that the coupling develops full strength of the bar.

**Measurement**

Measurement shall be made per running meter of bar tendon executed and fixed in place according to the drawings or as directed by the Engineer.

**Payment**

The payment shall be made at the contract unit price per linear meter of anchor installed and accepted by the Engineer. The rate shall include drilling, installation. grouting and tensioning of ground anchor including provision, operation and maintenance of drilling machine and temporary drilling ramps as necessary and is considered as full and final compensation for all labour, materials supply, coupling, placing, providing, supplying and fixing of anchor head assembly, centralizers, head plate, nuts/ bolts, steel rods procurement, rust protection measures, thread cutting and all other incidentals and provisions necessary to complete the work in conformity with these specifications.

## 2. PULLOUT TESTING OF TEST ANCHORS

### Specification

Load testing shall be done by accepted method for checking the suitability of test anchors. The stress-strain characteristic of steel is time and stress dependent. The stress level in the steel will be checked for its capacity to cover the service conditions expected at site within the permissible limits of design. Irrespective of the method of stressing used, one of the objectives of testing is to provide a load extension relationship to enable the adequacy of the anchor to be assessed and to this end two main parameters have to be measured: load and extension.

The method of anchor stressing shall be normally by direct pull from a hydraulic jack, connected to hydraulic pump and pump pressure gauge. Load is derived via calibrations charts from the oil pressure in the jacking system. Care shall be necessary to ensure proper and frequent calibration of the pressure gauges and they meet, various design standards (BS 1780). As-measured extensions shall be carefully considered for a gross-extension before lock-off, for occurrence of pull-in of the wedges until the system is tight and in equilibrium, for movements due to bedding down of anchor blocks, for deflection of anchor bearing plate, for local deflection of structure and for some de-bonding and permanent displacement of the anchor as well as the elastic stretch of the loaded tendon etc.

Recommended Load Increments and Periods of Observation for Pull-out Tests
(LITTLEJOHN. 1981)

| **Test Anchorages** | | **Period of Observation (minutes)** |
|---|---|---|
| Load Increment (% Tw*) | | |
| 1st Load Cycle** | 2nd & 3rd Load Cycles | |
| 20 | 20 | 5 |
| 50 | 50 | 5 |
| | 75 | 5 |
| 100 | 100 | 5 |
| | 125 | 5 |
| 150 | 150 | 15 |
| 100 | 150 | 5 |
| 100 | 100 | 5 |
| 50 | 50 | 5 |
| 20 | 20 | 5 |

*Tw = working load
**For this load cycle there is no pause other than that necessary for the recording of extension data

Minimum Number of Test Anchors for a given Anchor Type
and Ground Type According to
Bureau Securities (1972)
Number of Production Anchors in Any Soil or Soil Category (n)
Number of Anchor Tests (N)

| | |
|---|---|
| 1-200 | 2 |
| 201-500 | 3 |
| 501-1000 | 4 |
| 1001-2000 | 5 |

**Measurement**
Measurement shall be done in numbers of each test successfully performed as directed by the Engineer to his satisfaction.

**Payment**
The payment shall be done at the Contract unit price per each test as said above.

## 3. MICROPILES

**Specification**

Micropiles are provided to support foundation of some of the retaining walls

The necessary drilling works for these micropiles, casting and grouting in conformity to Specification and this Special Provision shall be executed by the Contractor.

Micropiles shall be of structural steel conforming to ASTM A36 or equivalent with a thickness according to drawings or directives of the Engineer, but minimum 3 mm, The outer diameter shall be minimum 70 mm and not exceed 90 mm.

The pile head shall be of structural steel, minimum dimensions 160/160/20 mm, welded to the steel pipe_ A central opening of diameter 40 mm or as directed by the Engineer shall be cut for grouting.

The length of micropiles shall be according to drawings or directives of the Engineer. It is anticipated that the length shall be 6 m.

Measurement
Measurement shall be made per running meter of micropiles executed and fixed in place according to the drawings or as directed by the Engineer.

Payment
The payment shall be made at the Contract unit rate. The rate shall include all labour, material and transport costs including cement and sand grout according to Specification and this Special Provision, supply, transport, placing, providing and fixing micropiles, steel rods procurement, anti-rust protection measures, including drilling up to 6 m and all other incidental and provisions necessary to complete the work in conformity with the Specification.

Payment shall be done at the Contract unit price per running meter of the measured length as said above.

## 4. HORIZONTAL DRAINS

**Specification**

Drilling of bore hole minimum diameter 75 mm shall be carried out by the Contractor as shown in drawing

The drainage pipes for horizontal drains shall be HDP-pipes diameter 63 mm and a minimum thickness of 3 mm (Class II) unless otherwise specified on drawings or by the Engineer

The pipes shall be perforated by drilling minimum 50 holes per meter length on the upper half of the pipe with a minimum diameter of 5 mm. Perforating has to be approved and might be adjusted to soil conditions by the Engineer.

The drain pipes shall be covered by a geotextile having following Specifications:
Permeability greater than 0.01 cm/s

Pore width between 0.09 mm and 0.15 mm

Strength greater than 8 kN per meter

The length of drains is anticipated to be 10 to 25 m but shall have to be decided by the Engineer on hydro geological conditions encountered.

The pipes shall be secured in drill holes properly and rigidly in such a way that it prevents tampering and pulling out of the drilled/bored hole.

**Measurement**
Measurement shall be made per running meter of completed horizontal drain according to the drawings or as directed by the Engineer.

**Payment**
The payment shall be made at the Contract unit rate. The rate shall include drilling operation, drilling machine charge, labour, material, other necessary tools and equipment, transport costs including perforated HDP pipes supply and laying, supply and wrapping of geo-textile and construction of water collection chamber as shown on the drawing/or as directed by the Engineer and according to Specification and this Special Provision and all other incidental and provisions necessary to complete the work.

## 5. HDP DRAINAGE PIPES

**Specification**
For drainage purpose, HDP pipes of diameter 160 mm shall be used if not specified otherwise on the drawings or by the Engineer. The drainage pipes shall be perforated in 5 lines with spacing of 5 cm c/c with holes of diameter 8-10 mm. The drainage pipes shall be wrapped with geotextile. All pipes shall conform to (6 kgf/cm2).

The contractor shall provide facilities to shape the pipe and in such a manner that they fit tightly together. Where HDP pipes are laid in gabion crates, the rate shall include the opening of holes through the wire mesh. After the pipe is laid, a selvedge wire shall be woven around the pipe.

Special attention shall be paid while filling the crate. The pipe shall not be squeezed by loose stones. Rounded pebbles shall be places around the pipe to protect the HDP pipe.

**Measurement**
Measurement shall be made for linear meter of perforated HDP pipe placed in drain as per drawings and accepted by the Engineer.

**Payment**
The payment shall be made at the contract unit rate per linear meter of perforated HDP pipe and shall include procurement of pipe material, transport, perforation, laying and placing, connecting of pipes, opening and closing of wire meshes in gabion. The unit rate shall be considered full and final compensation for all incidentals and provisions necessary to complete the work according to these specifications.

## 6. CORE DRILLING AND INSTALLATION OF PIEZOMTER WORKS

**Specification**
The purpose of the core drilling is to obtain the subsurface information on landslide subsoil and foundation materials and conditions. The Contractor shall provide drilling program/ schedule to the Engineer before commencing drilling work.

The work to be performed shall include, but not by limited, to the following items.

- Mobilization and demobilization of drill rig and its accessories.
- Platform construction and setting up of drill machine.
- Shifting of drill rig from one location to another including temporary access road construction
- N size rock coring and water pressure testing.
- SPT/DCPT testing at 3m intervals
- Maintaining of records.
- Preparation of geological log of bore holes.
- Preparation of report with data analysis and interpretation.

Core drilling shall be conducted so as to obtain continuous cores with maximum practicable percentage of core recovery. Core barrels shall be of double tube equipped with inner tubes and diamond bits sized to produce N size core.

Three coloured photographs (a) photographs showing the site before investigation, (b) photographs showing the drilling operation at site and (c) photographs showing the stake after the completion of the investigation will be included in the report. Finally high resolution coloured photograph of core samples of each borehole will be documented.

Core drilling shall be carried out as per ASTM designation D 2113-83 standard procedure using a conventional coring accessory. The drilling shall be done primarily at N size resulting in a hole diameter of 76mm (3 inches); diamond bits producing about 50mm diameter core size will be used as the cutting aid for sampling purpose. The core barrel used will be of double tube swivel type with a retrievable inner tube. Single tube core barrel will only be used for special purpose of carrying out dry drilling when double tube core barrels cannot be used technically. Every effort shall be made to obtain 100% core recovery. Drilling shall be carried out telescopically with the top part of the drill hole at H standard size followed by N size casing. The holes shall be cased at H and N size as required. The drilling will advance before covering each stage with the appropriate size of casing. Clean water in its natural state shall be used for washing the sludge and as a coolant. Coring of small size diameters (B size) shall be done only when N size coring is practically impossible below a certain depth, with a prior written authorization of the Engineer.

**Core Boxes**

All the cores obtained from the inner tube of the core barrel will be placed in a core box specially designed and fabricated as per the specification. The top and the bottom part of core from each run shall be labeled Core from each run shall be carefully placed in the core boxes with the shallowest depth in the upper left hand corner of each core box and separated from the previous run with a spacer made of wood of sufficient thickness to allow for convenient marking. The drill lengths with core loss shall be marked "core loss" and will be replaced by a piece of wood of the same length as the core loss section. Each core box shall hold 5 meters of core in five sections of 1.00m length each in parallel rows with wooden partitions of Sufficient thickness so that it will allow for convenient marking. The sections with core loss shall have sludge collected from the same section. Similarly the section with soft friable Portions of core such as badly weathered and decomposed zone or joint fillings or soil zone shall be preserved in plastic wrapping.

The core shall be logged by a qualified geologist for an adequate geological interpretation. The cores in the core boxes shall be photographed (color, high resolution >3 megapixel) before they are removed from the drill site. The core boxes shall be adequately stored to protect them against theft, loss or damage during drilling of the holes. After completion of drilling the entire core boxes shall become the property of the employer and shall be delivered to Employers' Project office premises.

**Daily Drilling Report**

Daily drilling reports with at least the following information shall be prepared. All other relevant information shall be included in the daily drilling report. In general, the daily drilling report includes the following:

- Date
- Location and borehole No.
- Diameter of the borehole
- Depth and size of casing pipe
- Water level in the morning and evening i.e. before starting the work and after every day's work
- Drilling time and duration of each operation
- Drilling depth of each operation and daily progress
- Rate of water flow applied for drilling as well as return or loss of injected water
- Water loss and spring shall be recorded as detailed as possible together with the depth, if any
- Color of water returned
- Diameter and type of drill bit
- Core recovery
- Description of subsurface conditions and all findings obtained during drilling
- Special drill conditions encountered during drilling like fall of drilling accessory in a crack, etc.
- Model of drill machine used
- Model and Type of water pump
- Name of operator and recorder and the number of workers

**Bore hole Logs**

The Contractor shall prepare the geological logs of each of the borehole simultaneously with drilling. The borehole logs must be prepared by engineering geologist/geo-technical engineer in a standard format. The borehole log shall contain at least the following information:

Date (Start and finished)
Drill hole number
Location
Site coordinates Easting …….. Northing ……..
Elevation
Drill Machine
Drilling Method
Casing
Depth of the hole
Driller
Supervisor
Logged by
Core recover %
ROD
Permeability value
SPT/DCPT value
Lugeon value
Discontinuity Characteristic
Remarks

**Borehole Locations**

All drill holes will be capped with a 20 X 20 cm size concrete block of about 60 cm long. A piece of GI pipe of 3" diameter and about 40 cm long will be projected outside the concrete block. Drill hole number and elevation will be painted on the GI pipe.

**Permeability Tests**

The Contractor shall measure the groundwater level and shall perform permeability tests to determine the water bearing characteristics of the overburden. Drilling fluid or other substances that may affect the permeability of the overburden will not be used. The Contractor shall have an adequate source of clear water. a means of measuring the rate of flow of water, added to the top of the hole and a means of measuring the depth of water in the hole.

The hole shall be advanced by driving casing to the required depth only. Flush joint casing shall be used and the casing shoe or bit shall have the same outside diameter as the casing_ The objective of driving casing is to obtain as tight a seal as practical between the casing and the overburden to preclude leakage of water along the outside of the casing during testing. Drilling and casing techniques shall be oriented towards this goal. All cuttings shall be cleaned out to the bottom of the casing and the hole flushed with clear water. Clear water shall be added to fill the hole to the top of the casing, and the rate of fall of .the water level in the casing with time shall be measured and maintained stable as required. Alternatively, clear water shall be added to the casing at a constant rate of flow and the rate of flow necessary to maintain the water level in the casing shall be measured as required. The following information shall be recorded:

- Hole number
- Depth of bottom of hole
- Depth of bottom of casing
- Diameter of hole, inside diameter of casing
- Rate of fall of water level in the hole in centimeters hole in liters per minute, or rate of flow of water added to the hole in liters per minute.
- Data and time of test.
- Name of person conducting the test.

The permeability test by constant head method shall be calculated as follows:

k (1000*0)/(5.5*R*H*60),cm/sec, where.
k = Coefficient of permeability, cm/sec.
Q = Consumption of water in on minute, liter/ min
R = Radius of the Casing Stand pipe = 4.5cm
H = Effective head, cm defined as the total length in cm from the top of the casing standpipe to the water table or to the test section, whichever is smaller
or. H= Hs + Hd, where,
Hd = Depth of water table below the ground or the depth of test section below the ground, cm.

The above formula may be rewritten as:
K = c * Q/H. where,
c is a constant equaling to 1000/(5.5 x 4.5 x 60)=0.6734

The results of constant head permeability tests will be tabulated and presented in the reports.

**Water Pressure Tests (Lugeon Test)**

The Contractor shall measure the ground water level and shall perform water pressure tests (Lugeon' Tests) using suitable mechanical or pneumatic packers to determine the water bearing characteristics and rockmass condition of the rock. Drilling mud or other substances that may affect the permeability of the rock shall not be used. The packer used shall be of double type.

The Contractor shall have an adequate, source of clear water pump (s) capable of delivering water at rates up to 130 liters/ minute at pressures tit, to 10 kg/cm`, packers capable of sealing off portions of the hole under pressures of upto 10kg/cm2, water meter(s) reading to the nearest 0.5 liters per minute with an accuracy within 10 percent gauge (s) for reading water pressures up to 10 kg/cm2 with an accuracy of 10 percent, a stopwatch, valves to allow

regulation of flow pressure, and other equipment necessary to conduct the tests.
The hole shall be flushed with clear water prior to pressure test. Test may be conducted either progressively from the bottom of the hole upward for the entire portion of the hole in rock, or for isolated segments or the hole.

Water pressure tests shall be carried out in each borehole at 3 m intervals. The test pressures for each section shall be changed at five steps. However, the number of pressure stages depends on the geological conditions and is decided by the site geologist. Generally, five pressure stages are applied only at depths below 15m. Prior to starting the test, three gauge pressures shall be selected, minimum, maximum and intermediate. Flow rate of injecting water shall be observed under each step of the pressure for 10 minutes after the flow rate becomes stable and shall be recorded at every minute.

The firm shall submit the daily report of the field permeability test for each test stages in suitable format. The report shall include, but not be limited to the following information:

- Date. hole no, test no, location
- Packer type, hole diameter
- Depth of packer setting and the bottom of borehole
- Test length
- Gauge height above the ground
- Depth of water table
- Pressure of water supply
- Test period 10 minutes
- Time of test
- Name of person conducting the test
- Depth of casing.

The Lugeon Value is calculated as follows Lu = (10 - Q)/(p " L), where,
Lu = Lugeon value
Q = quantity of water injected per minute, I /min. P = pressure, kg/cm2
L = length of test section, m

P is calculated as:
P = po +0.1 (H1 -H2), where,
po = Pressure at the pressure gauge, kg/cm2

H1, and H2 are hydrostatic heads between the pressure gauge and the center of the test section and the water table and the center of the test section respectively in meters.

The derived Lugeon values shall be tabulated and presented in the report.

**Installation of Stand Pipe Piezometers**
The piezometer pipe of minimum diameter of 50 mm fitted with at least 3 m length of filter sections shall be installed in the drilled hole. The top section of the piezometer shall be sealed with clay and mortar. The head of the piezometer shall be equipped with a box encased in concrete with arrangement for fixing of padlocks. The top layer shall be flushed which shall serve as bench mark for measurement of monitoring of the piezometric level.

**Measurement**
Measurement shall be made for linear meter of piezometer executed as per drawings and accepted by the Engineer.

**Payment**
The payment shall be made at the contract unit rate per linear meter of drill hole, installation of piezometer and shall include procurement of all materials, equipment, drilling works, in-situ testing and skilled technicians and operators. The unit rate shall be considered full and final compensation for all incidentals and provisions necessary to complete the work according to these specifications.

## 7. ROCK NETS

**Specification**

Rock net shall conform to the requirements of IRC Rockfall SOAR, Highway Research Board Report 23, in particular, Section 5.3.2 and 5.3.3, which are reproduced below.

**5.3.3** *Specifications for reinforced mesh*

Reinforced mesh is a woven geocomposite made from steel wire and ropes assembled together during the production of simple rockfall netting. Depending on the direction in which the ropes are inserted in the mesh, the mesh can be Mono-oriented or Bi-oriented.

*Mono-oriented reinforced mesh:* Steel ropes, of 8 mm diameter are used in place of the conventional selvedge wire and are also inserted longitudinally in the woven mesh at a approximate distances of 0.3 m, 0.5 m, 1.0 m, 1.5 m and 3.0 m. (Refer **Fig. 5.4**)

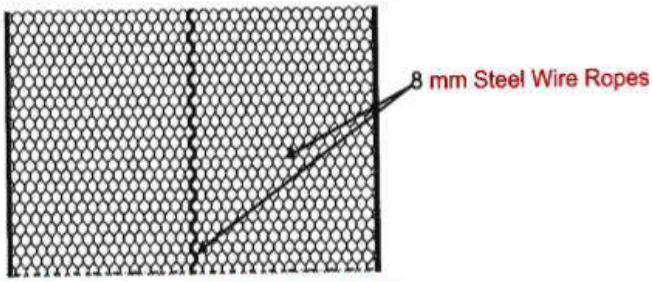


Fig. 5.4 Mono-oriented Reinforced Mesh

***Bi-oriented reinforced mesh:*** Steel ropes, of 8 mm diameter are used in place of the conventional selvedge wire and are also inserted longitudinally in the woven mesh at a approximate distance of 1 m/1.5 m/3 m. Steel ropes are also inserted in the cross direction through the mesh at a approximate distance of 1 m/1.5 m/2 m/3 m centre-to-centre during production. (Refer **Fig. 5.5**)

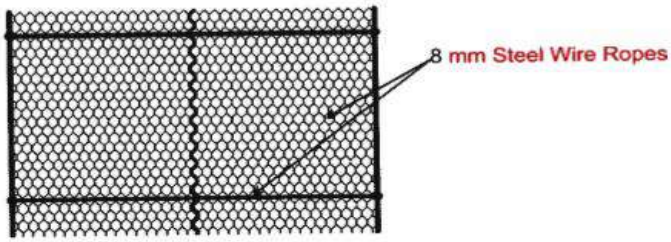


Fig. 5.5 Bi-oriented Reinforced Mesh

***Mesh Size:*** In accordance with mesh size as in simple rockfall netting in 5.1.

*Zinc Coating of mesh wire and ropes:* In accordance with Zinc or Zinc alloy coating as in simple rockfall netting in 5.1.

***Tensile Strength:*** The minimum tensile strength of the reinforced mesh netting varies depending on the mesh opening size, diameter of the wire used and spacing of the cable. The general range of the tensile strength when tested as explained in Chapter 4 shall range from 40 kN/m to 170 kN/m.

**Specifications for Pretensioned Mesh**

**5.3.4** *Specifications for simple rockfall netting*

Simple Rockfall Netting (IRC:56) consists of a mechanically woven double-twisted wire mesh with hexagonal mesh opening size (**Fig. 5.6**) and tolerance in accordance with EN 10223-3.

The netting shall be supplied in the form of rolls which are used to prevent rocks and debris from falling on to roads, railways or any other area which needs protection.

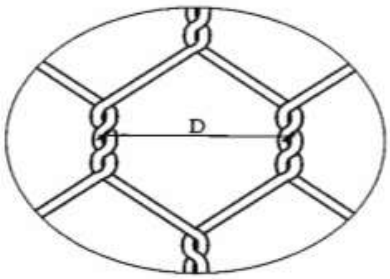


Fig. 5.6 Mesh Type & Nominal Size 'D' (as per EN 10223-3)

***Mesh Size:*** The general mesh openings size used for the rockfall protection works are 8 x 10 and 10 x 12 with the wire diameter of the mesh wire ranging from 2.7 mm to 3.0 mm.

***Zinc Coating:*** The minimum mass of galvanisation of the wire shall be in conformance with IS:4826. For corrosive environments Zn alloy coatings may be provided as per IS:10614-2012.

***Tensile Strength:*** The minimum tensile strength of the simple rockfall netting varies depending on the mesh opening size and the diameter of the wire used. The general range of the tensile strength when tested as explained in chapter 4 shall range from 32 kN/m to > 60 kN/m.

**Measurement**

The rock net item shall be measured in area of rock nets in slope face inclusive of complete rock net system with rock net, steel cable, binding with binding wires and bull dog grips and fitting and securing of the net system with head assembly of dowels or rock bolts or soil nails.

**Payment**

The payment shall be made at the Contract unit rate. The rate shall include procurement of rock nets and fabrication, supply and fixing of cables all complete with three bull dog grips at end of each 15m on both ends with light tightening, fixing and laying of nets and cable , labour, material, other necessary tools and equipment, safety gear, trails and railings / scaffolds to ease construction, transport costs, supply and laying, supply and laying of mulch as shown on the drawing/or as directed by the Engineer and according to Specification and this Special Provision and all other incidental and provisions necessary to complete the work.

## Section 2600: MASONRY FOR STRUCTURES

### 2603 CONSTRUCTION

**(1) General**

Add the words “levelled, compacted” after the word “cleaned” in the first sentence of fourth paragraph.

### 2612 PAYMENT

Add the following paragraph after the first paragraph.

The payment for stone masonry works shall be made in two (2) installments. First installment 80% of the unit rate quoted in the BOQ shall be made after the construction of stone masonry structures. The second installment 20% of the unit rate quoted in the BOQ shall be made after carrying out the backfilling of the structures as per the Specifications and to the satisfaction of the Engineer along with the payment of the backfill works.

**Section 2800: BIO-ENGINEERING WORKS 2807 SITE PLANTING AND SOWING**

**(3) Site Planting of Grass slips and Cutting**

Delete (b) paragraph and replace with:
The Contractor shall prepare the surface for planting as instructed by the Engineer. Areas to be grass planted shall be given a layer of topsoil at least 75 mm thick unless, due to the presence of suitable sub-soil, the Engineer orders that the topsoil be omitted.

Delete first sentence of the paragraph (e). Replace the word “them” in second sentence of paragraph (e) by “plants”. Delete the word “supplied” in last sentence of paragraph (e)

Add following at the end of paragraph (h)

Any bare patches where the grass has been damaged or has dried up, shall be planted again at the Contractor's expense until an acceptable healthy cover has been established.

All grassed areas shall have acceptable cover as defined below at both the beginning and the end of the maintenance period.

Acceptable cover, in the case of turfing, shall mean that the full area shall be covered with live, healthy grass without bare patches at any time not less than three months after turfing.

After “,…..traffic control,” in third sentence of the paragraph (j), add “preparation of the surface, providing and laying of necessary top soil,”

Add new clause 2813 "Measurement and Payment" as follows:

**2813 MEASUREMENT AND PAYMENT**

All the bioengineering items shall be measured in the respective units of the items of works specified in the BOQ.

The payment of the bio-engineering work items shall be made in two installments. First installment of 75%of the unit rate quoted in the BOQ shall be made after completion of the works as per the Specifications and satisfaction to the Engineer. The second installment ~~50%~~ 25% of the unit rate quoted in the BOQ shall be made at the end of Defect Liability Period after carrying out the aftercare and maintenance of the bioengineering works that deem to be covered within the quoted rate, and accepted to the Engineer.

**Section 3000: SUB-SURFACE GEOTECHNICAL INVESTIGATIONS**

Add new Sub-clause 3009: Additional Investigations on the Foundation of Road Widening RCC Structures

**3009: ADDITIONAL INVESTIGATIONS ON THE FOUNDATION OF ROAD WIDENING RCC STRUCTURES (Retaining walls, precast beams with cast in situ slab etc., cantilever slabs etc.)**

There are some locations where extension of the carriageway width is required by constructing road widening RCC structures (Retaining walls, precast beams with cast in situ slab etc., cantilever slabs etc.) down slope of the existing road bed. During construction of such structures it shall be required to ensure against two problems that may occur. Firstly it may be associated with ensuring the stability of existing road bed during construction. Secondly it may be associated with ensuring adequate bearing capacity of the foundation material. The analysis will have to be done separately for foundation resting on soil and rock. Additional investigations will also be required.

At this stage of design a safe bearing capacity of soil foundation has been assumed to be equal to 300kN/m2 while for rocks it is1,000 kN/m2.

For the first problem the road bed slope will have to be supported most probably in the form of sheet piling.

For the other problem, additional soil investigations have to be carried out. Additional investigations are required for the assessment of the bearing capacity and settlement characteristics of the foundation material if it is not resting on rock. Trial pits shall be used to collect disturbed as well as undisturbed samples for the assessment of strength and deformation properties of the foundation material. Besides the index properties and soil classification tests, the laboratory tests shall include shear tests, engineering properties and evaluation of safe bearing capacity.

Wherever road widening structures have to be placed on rock foundation below the over burden material, additional investigations including borings may be required. These locations together with their spacing shall be fixed by the Engineer as per site conditions before start of construction works.

No separate measurement and payment shall be made for the above mentioned sheet piling works and soil investigation works. The contractor shall include the cost of all the above mentioned works in the respective items of the Bill of Quantities.

Add new Sub-clause 3111: Interlocking Concrete Block

**3111 INTERLOCKING BLOCK**

**(1) General**

Laying of the blocks shall be done, precisely at the indicated level and profile and in a way that a good surface draining from the causeway is assured. The blocks shall be laid to the pattern as shown in the drawings or as directed by the Engineer. The blocks shall be laid as tight as possible to each other. The maximum joint width shall be limited to 4 mm. Fine angular sand as per specification shall be brushed into the joints, and thereafter compaction shall be done with a vibrating plate compactor on a clean surface.

Interlocking Concrete Block Pavements shall be used in causeways for the gulley with no perennial flow or as per the instruction of the Engineer.

**(2) Design Parameters**

**(a) Block Thickness**

The thickness of interlocking blocks shall be 100 mm. The blocks shall be constructed with M-20/20 grade concrete.

All blocks should be of the same thickness, with a maximum allowable tolerance limit of ±5 mm.

**(b) Sand Bedding and Jointing**

A layer of sand bedding is provided between block pavement and concrete base course to provide a cushion between the hard base and the paving blocks and to correct the permitted surface unevenness of base.

The sand bed should not be too thick lest it would be difficult to control the surface level of the blocks. A layer thickness of 20 to 40 mm is found to be satisfactory. The sand used should be free from plastic clay and should be angular type.

Joints between blocks are filled by fine sand. Normally, the bottom 20 to 30 mm of the joint gets filled with bedding sand, whereas, the remainder space has to be filled with jointing sand by brooming it from the top. The joints are normally 2 to 4 mm wide.

### (c) Base and Sub-base Layers

These layers are the important structural layers of a block pavement. The materials used for base construction consist of M-10 grade concrete mix of 100 mm thickness. The granular material sub-base shall be of 200 mm thickness.

### (3) Construction

### (a) General

The construction of block pavement involves preparation of sub-grade, sub-base and base course layers, bedding sand and finally the laying of blocks. The block paving can be done entirely by manual labour. However, for efficient construction work, the work force has to be properly trained for this specialized job.

### (b) Preparation of Sub-grade

Sub-grade should be compacted in layers of 150/200 or 100 mm thickness depending on capacity of compactor. The prepared sub-grade should be graded and trimmed to a tolerance of ± 20 mm of the design level.

### (c) Base and Sub-base Course

The plain cement M-10 grade concrete base course shall be constructed following the section 2000 of this specification.

The granular sub-base course shall be constructed following the section 1201 of this specification.

### (d) Placing and Screeding of Bedding Sand

The thickness of the sand bed after compaction should be in the range of 20-40 mm, whereas, in the loose form it can be 25 to 50 mm. Bedding sand should not be used to fill-up local depressions on the surface of a base or sub-base. The depressions should be repaired in advance before placing sand. Sand to be used should be uniformly in loose condition and should have uniform moisture content. Best moisture content is between 6 to 8 per cent.

The processed sand is spread to the required thickness. The sand is subsequently compacted with plate vibrators weighing 0.6 tonnes or more.

### (e) Laying of Blocks

Blocks can be laid generally by manual labour.

Normally, laying should commence from the edge strip and proceed towards the inner side. As far as possible, laying should proceed in one direction only, along the entire width of the area to be paved.

While locating the starting line, the following should be considered:

- On a sloping site, start from the lowest point and proceed uphill on a continuous basis, to avoid down hill creep in incomplete areas.
- In case of irregular shaped edge restraints or strip, it is better to start from straight sting line.
- Influence of alignment of edge restraints on achieving and maintaining laying bond.

## 4. Opening to Traffic

Until all the joints are completely filled, no traffic should be permitted over the block pavement.

Plain cement M-10 grade concrete base course layer must be given at least 7 days to cure before traffic is permitted. The block pavement should be inspected frequently, to ensure that any incompletely filled joints, exposed by traffic and/or weather are promptly filled. Such frequent inspection should be continued till dust and detritus from the roadway tightens the surface of the joints.

## 5. Measurement

Interlocking block work shall be measured for payment in in square meters in their final position to the line, grades and levels shown on the drawings or as directed by the engineer.

## 6. Payment

Payment for laying interlocking blocks shall be made at the contract unit rate in full compensation for supplying and laying the tiles as per these specifications, including cost for materials, labor etc.

Add new Sub-clause 3112 Ground Anchors

**3112 GROUND ANCHOR**

**(1) General**

The permanent ground anchors for the road widening RCC structures shall comply with the German standards and regulations and with the Specifications given below.

Only certified ground anchor systems with certified corrosion protection systems shall be permitted.

They shall be installed approx. 0.7m below deck slab or as determined by the Engineer.

The anchor lengths shall be determined by testing in accordance with DIN 4125 taking account of the requirements resulting from the structural analysis.

The drilling of the anchor holes shall be carried out horizontally with an inclination of approx. 10 degrees.
The anchor drilling machine is not allowed to stand on the road because that shall hinder traffic movement. Therefore, an appropriate platform for the drilling machine shall be provided temporarily on river side.

The grouting and prestressing of the permanent ground anchors shall be carried out in accordance with German Standards.

The anchor heads shall be arranged in pockets provided in the RCC column.

The unit rate of Bill of Quantity shall include all works related to the permanent ground anchors as described above and specified in the Specification below and in accordance with the approved drawings, such as supply of the specified permanent ground anchors with corrosion protection system, drilling of the anchor holes, installation, grouting and prestressing of the permanent ground anchors, provision of the machines and the platform needed, removing the boring material, testing of anchor bearing capacity etc.

**(b) Specifications of Ground Anchor**

The permanent ground anchors shall comply with the German standard DIN 4125 and shall be certified by a German permission certificate from DeutschesInstitut for Bautechnik (German Institute for Structural Engineering).The grouting shall be in accordance with DIN 4227 Part 5. It is planned that DYWIDAG / D.S.I. permanent ground anchors with single prestressed bars diameter 32 mm of prestressed steel grade St 835 / 1030 N/mm2 shall be installed. According to the permission certificate, the permissible anchor tension force is limited to 485 KN as far as the prestressing steel is concerned. The corresponding grouted anchoring length needed for that shall be determined by testing in accordance with DIN 4125.The free not grouted anchor length will be determined by the requirements resulting from the structural analysis. Another certified permanent ground anchor system may be permitted provided it is equivalent to the DYWIDAG / D.S.I system in view of strength as well as in view of the corrosion protection system. The Contractor shall give evidence for this to the Engineer by submitting the permission certificate. A minimum of 2 trial tests to verify the anchors ultimate load will be done at each new location (each road widening RCC structure).

**(c) Measurement**

Ground anchor shall be measured as installed in the ground incompliance with these specification at locations shown in these drawings or as instructed by the engineer.

**(d) Payment**

Payment for installing the ground anchors shall be made as per the unit rate provided in the contract agreement after complying with these specifications.

Add new Sub-clause 3113 Precast RCC beams

## Section 3113: PRECAST RCC

### BEAMS (1) Scope

Provision of precast concrete beams has been made to avoid the requirement of formwork with scaffoldings at locations where the large steep drop makes it practically impossible to provide the same. Two precast beams shall be placed on abutments / piers and then a tie beam (in between two precast beams), top slab and top part of the abutments / piers shall be casted together in situ.

### (2) Materials

Concrete and reinforcement for precast members shall comply with Section 2000.

### (3) Casting of Pre-cast beams

Pre-cast concrete beams shall be casted at appropriate location with sizes as shown on the drawings. Exact length of beams required shall be measured and fixed after casting of abutments / piers to desired level. The precast beams shall have reinforcement bars extending outside both ends of the abutment which shall be tied into the abutment / pier. From the middle of the beam reinforcement shall coming out for tying it to the other side beam with tie beam (to be casted in situ).

### (4) Placing Pre-cast beams and casting in situ the top slab and tie beam

Two pre-cast concrete beams shall be placed on the abutments / piers as shown in the Drawing. Reinforcement extending out from ends of the beam shall be bent / tied into the abutment / pier. From mid of the precast beams, reinforcement shall be coming out, which shall be tied into the tie beam connecting the two precast beams.

Extreme care shall be exercised in handling, storing and erecting pre-cast reinforced or pre-stressed concrete members to avoid twisting, racking or other distortion that would result in cracking or damage to the members. Pre-cast members shall be handled, transported and erected in an upright position and the points of support and directions of the reactions with respect to the member shall be approximately the same as when the member is in it's final position.

For casting in situ the top concrete slab and the tie beam, prefabricated steel plate with channel sections welded on top (as shown in the drawings) shall be placed over the two pre-cast beams. This shall act as formwork for concreting and shall remain permanently embedded in the structure. Thereafter reinforcement shall be placed and concreting of top slab and tie beam carried out.

### (5) Measurement

The pre-cast members casted as per drawings or as instructed by the engineer shall be measured in cubic meters inclusive of reinforcement for payment. Reinforcement shall not be measured separately.

### (6) Payment

The payment shall be as per the contract unit rate as per quantities measured as provided above, shall be inclusive of transporting the precast members to laying site, lifting, placing, compliance of Clause 3102 and as directed by the Engineer. The contract unit rate shall be the full and the final payment to the Contractor as per Clause 112 to complete the work as per these Specifications.

*Add new **"Section 3200 – Performance Based Maintenance Works"** after **"Section 3100: Miscellaneous Works"***

**Section 3200 – Performance Based Maintenance Works**

# Contents of Performance Based Maintenance Works

*3201 Overview of Performance Based Maintenance* ..... *76*

*3202 General* ..... *78*

*3203 Management Services* ..... *80*

*3204.Operational Services* ..... *92*

*3206 Emergency Works* ..... *117*

# 3201 Overview of Performance Based Maintenance

## (1) Description

This Section 3200 Performance Based Maintenance Works and Services describes the works and services to be undertaken during Phase 2: Performance Based Maintenance Works.

The objective of performance based maintenance works and services is to ensure that the good physical condition of the road asset under contract over the entire period of the contract.

In traditional road maintenance contracts, the Contractor is responsible for the execution of works which are normally defined by the Engineer, and the Contractor is paid on the basis of unit prices for different work items and quantities of works executed. In Performance Based Maintenance contracts, the Contractor is responsible to identify, plan and carry out the Works and Services to achieve and maintain the Service Levels specified in Section 3200. Generally he will not receive instructions by the Employer and/or Engineer of what to do when, where and how as in traditional maintenance contracts, except for Emergency Works or Day Works.

The role of the Engineer, on behalf of the Employer, is to enforce the contract by verifying compliance with the agreed Service Levels and with all applicable legislation and regulations.

The Contractor will receive a Monthly Lump Sum Fee for the Performance Based Maintenance Works and Services. Payment reductions will be applied if the Contractor fails to comply with the Service Levels in any given month. Emergency Works are paid on unit price basis.

## (2) Required Services

Two groups of services are required: Management Services and Operational Services.

The management services include providing the information the Engineer/Employer requires to manage the road asset during the Maintenance Phase of the Contract and to facilitate either the next tendering process or handover to the Engineer/Employer, such as:

- Information on how the Contractor assures the quality of his services, manages the health and safety of his staff, manages emergencies, and manages traffic at the worksite
- Contractor's work programs
- Regular progress reports
- Inventory updates and other data sharing requirements
- Maintenance history
- Management of enquiries from third parties (public, police, etc.)

The operational services include the activities needed to maintain the satisfactory condition of the road assets, to assure their durability, as well as to satisfy the road users riding comfort requirement. These include, interalia:

- Road and lane width
- Road roughness
- Control of potholes and cracking
- Drainage off the pavement
- Rutting
- Visibility of road signs and markings
- Response times to rectify defects that compromise the safety of road users
- Vegetation control
- Edge break
- Depression
- Raveling

- Shoulder condition

## (3) Contractor's Responsibilities

Besides the timely provision of management information to the Engineer, the Contractor shall be responsible for defining, optimizing and carrying out in a timely manner the works which are needed to ensure the roads remain at or above the Operational Service Levels defined in the Contract. In doing this, the Contractor shall comply with local legislation, the Specifications, environmental and social regulations, and the requirements of the World Bank's Environmental and Social Standards.

The Contractor shall set up a Self Control Unit/Performance Monitoring Unit to observe road conditions and plan the various works needed to ensure the roads meet the defined Operational Service Levels. The Self Control Unit/Performance Monitoring Unit will provide the Contractor with information on the Contractor's compliance with the Operational Service Levels, and data required to define and plan all works. Under the maintenance works and services, generally the Engineer will not issue instructions to the Contractor regarding the types and volumes of works to be carried out but instead, the Contractor will decide what to do where, when, and how.

## (4) Definitions

In addition to the terms defined in the Conditions of Contract, the following words and expressions shall have the meanings stated.

- "Day" means calendar day
- "Emergency Work" means the works that are defined under Clause3206.
- "GPS" means Global Positioning System.
- "Management Service Levels" means Service Levels associated with the Management Services.
- "Maintenance Unit" means the Contractor crew dedicated to execute the maintenance works. This Unit shall also act as the initial response unit in case of any emergency.
- "Maintenance Works" means all Works and Services required to comply with the Service Levels. This includes replacements of road assets, if necessary.
- "MSL" means Management Service Levels.
- "Self Control Unit/Performance Monitoring Unit" means the Contractor's dedicated personnel tasked among other things to evaluate and report on the condition of the road as well as plan the necessary maintenance and rectification works.
- "Monthly Lump Sum" means the monthly rate per Kilometer of road payable to the Contractor for completed Maintenance Works, subject to reductions as provided in the Contract.
- "Operational Service Level" means the level of usability of the road and its various assets as established by the prescribed allowable non-conformances, beyond which the road is considered as non-complying and requiring rectification works to be executed.

- "OSL" means Operational Service Level.
- "Phase 1" means the period for which the improvement/construction works of the road is to be executed by the Contractor under Phase 1: Improvement/Construction Works.
- "Phase 2" means the period for which the performance based maintenance works and services to be executed by the Contractor under Phase 2: Performance Based Maintenance Works.
- "PRP" means Payment Reduction Point.
- "Payment Reduction Point Value" means the monetary value of one PRP.
- Rainy Season" means generally the time between June 15 and September15.
- "Road Assets" means all road related assets, including road furniture, within the right of way of the Nagdunga-Naubise Road section of Tribhuvan Highway belonging to the Department of Roads.
- "SL" means Service Level, a generic abbreviation for both OSL and MSL.
- "Commencement Date of Phase 2" means the day immediately following the conclusion of the Defects Notification Period of the Phase 1: Improvement/Construction Works.
- "Works" means Works and Services
- "Work Order" means an order issued by the Engineer in response to the Contractor's proposal for the execution of works under Emergency Repair Works, which details the works required as well as the agreed time and cost.

## 3202 General

### (1) Project Site

The project site is Nagdunga-Naubise Road section of Tribhuvan Highway.

Maintenance is to be provided for the road and all associated items for the full width of the road right of way and for any ancillary works outside the right of way such as drainage inlets and outlets, slope and structure protection works etc. The area to be maintained includes the first 10 m length of the side/approach roads measured from the outer edge of the formation width of main road.

### (2) Scope of Services

In accordance with GCC Clause 7, the Works to be provided by the Contractor include all managerial, administrative and physical activities that the Contractor needs to carryout, to comply with the Service Levels specified herein, or with any other requirements of the Contract. In particular, they include physical activities associated with the following road-related assets and items:

a. Paved areas of roads, parking areas, lay-bys, shoulders, footways and the like;

b. Medians and verges;

c. Signs, road markings and road safety furniture;

d. Road lighting and associated facilities;

e. Bridges, culverts, earth retaining structures and other structures;

f. Drainage ditches, pipes, manholes and related items;

g. Slopes of cuttings and embankments;

h. Landscaped areas; and

i. Other road assets, which have been constructed or installed during Phase1.

## (3) Performance Criteria and Service Levels

The required condition of road assets is achieved by satisfying performance criteria designed to limit the presence of defects such as potholes and cracking in the pavement. Performance criteria are defined by Service Levels, which are the specified threshold for each of the performance criteria; for example, it may be specified that there shall be no pothole in excess of 150 mm in diameter or 50 mm deep and no crack shall be wider than 5 mm. The defined Service Levels are the accepted minimum thresholds for the quality levels of the road assets for which the Contractor is responsible.

Operational Service Levels that are measures of the condition of the assets to assure their durability, to provide road user services and to ensure safe operation and comfort, such as:

(i) Timely response to rectify defects that compromise the safety of road users;

(ii) Repair of potholes and cracking;

(iii) Repair of Rutting;

(iv) Maintenance of drainage systems;

(v) Keeping road signs and markings clean, visible and in good condition;

(vi) Keep lighting equipment suitably visible and in good condition;

(vii) Vegetation control;

(viii) Maintenance of structures

For each performance criterion, a Service Level (SL) is specified. Throughout the contract period, if the Contractor fails to comply with an SL, pre-specified reductions will be made from amounts due to the Contractor. Each SL breach attracts payment reductions (deductions), which are accumulated and combined with the value of the individual payment reduction to evaluate the total reduction applicable.

## (4) Monitoring of Performance

Under the terms of the contract, the Contractor shall also be responsible for the continuous monitoring and control of road conditions and Service Levels for the road or road sections included in the contract. This shall be necessary not only to fulfill the contract requirements, but the activity shall also provide the Contractor with the information needed to be able (i) to know the degree of his own compliance with Service Level requirements, and (ii) to define and plan, in a timely fashion, all physical interventions required to ensure that service quality indicators never fall below the indicated thresholds. The Contractor generally shall not receive instructions from the Engineer concerning the type and volume of road maintenance works to be carried out. Instead, all initiative rests with the Contractor who shall do whatever is necessary and efficient to achieve the quality levels required.

Some emergency works are to be foreseen. Those are meant to remedy unexpected damage which occurs as a result of extraordinary natural phenomena, and which affect the normal use of the road network, or the safety and security of the users. For emergency works, the contract limits the responsibility of the Contractor, establishing that the Engineer will approve execution

of services and separate remuneration based on specific amounts proposed by the Contractor for each case, on the basis of volume of works estimated at each time and on unit prices included in the bid and in the contract.

### 3203 Management Services

Management Services are the various management processes and procedures of the Contractor that deliver the Operational Service Levels, ensure good stewardship of the road asset during the term of the Contract, provide information that the Engineer requires concerning the delivery of the Services and facilitate the next tender round.

#### (1) Functions of Contractor's Key Personnel

During the Maintenance Phase of the Works, the Contractor's key personnel shall include but not be limited to the following key personnel whose duties are outlined below:

- Contractor's representative / Contract Manager shall act and represent the Contractor during the Phase 2 of the Contract. His duties and responsibilities include those discussed in Sub- Clause 4.3 of the General Conditions of Contract.
- Performance Manager shall be responsible for the Self Control Unit and for the development and monitoring of the Program of Performance.
- Maintenance Engineer shall instruct and supervise the works undertaken on the site based on the requirements of the Contract.

#### (2) Self-Control Unit (SCU)

The Contractor shall establish, within his own organizational structure, a specific Self-Control Unit (SCU) staffed with qualified personnel. The SCU staff shall

- be responsible for maintaining at all times a detailed and complete knowledge of the condition of the roads included in the contract;
- provide to the Contractor's own management all the information needed in order to efficiently manage and maintain the roads included in the contract, without the SCU staff themselves having direct management responsibilities, or responsibilities for works execution;
- frequently patrol the roads included in the contract.
- prepare in a timely fashion the Monthly Compliance Tables for Maintenance Services and submit to Engineer at the end of the calendar month;
- carry out the Formal Inspections scheduled by the Engineer in accordance with the Operational Procedures;
- verify and audit the correct application by the Contractor's staff and subcontractors of the Contractor's Quality Assurance Plan and of all contractually required testing methods and other procedures related to the quality of works executed, and of materials used.

An experienced Civil Engineer (performance manager) shall be the head of the Self-Control Unit which shall be staffed with the adequate number of qualified engineers and/or technicians.

### (3) Site Regulations

The Contractor shall prepare Site Regulations setting out the rules to be observed in the execution of the Contract at the Site and shall comply therewith. Such Site regulations shall include, but shall not be limited to:

(a) Safety;

(b) Traffic control;

(c) Accident and Emergency response;

(d) Dealing with third party enquiries and complaints;

(e) Sanitation;

(f) Medical care; and

(g) Fire prevention.

The Site Regulations shall comply with the relevant laws and regulations of Nepal.

### (4) Specifications and Work Methods

The Maintenance Works shall be executed in accordance with the Specifications or any applicable Standards stated in the Specifications.

In case of conflict between the Specifications and Work Procedures defined in Phase 1 and the Service Levels or specifications of Phase2, the Service Levels and Work Procedures of Phase2 shall take precedence. If an ambiguity or discrepancy is found in the documents, the Engineer shall issue any necessary clarification or instruction.

With the prior written approval of the Engineer, the Contractor may introduce new materials and work methods as long as they provide a better quality of work.

Under no circumstances shall the Contractor be entitled to any additional payment or relief from payment reduction due to the inadequacy of the materials and work procedures that he has proposed and employed in the Works and Services, notwithstanding any consent by the Engineer to their use.

### (5) Program of Performance

The Contractor shall develop, implement and maintain a Programme of Performance, which shall set out in detail the management processes, procedures and controls that he will employ to deliver the Services and Works. The Programme of Performance shall comprise the following components:

#### a) Operational Plan

The Operational Plan shall describe how the Contractor will undertake the Works to achieve the Service Levels, including but not limited to the following matters:

(a) Organizational structure for management and delivery of the Services;

(b) Locations and coverage of depots and storage facilities;

(c) Numbers, classification and deployment of equipment and personnel;

(d) Provisions for procurement and storage of materials;

(e) Procedures for Safety Inspections and Service Level Inspections;

(f) Procedures for Structural Inspections;

(g) Procedures for routine maintenance and repair works;

(h) Procedures for incident response and emergency works;

(i) Procedures for response to third party enquiries, reports and complaints.

(j) Procedures for data collection, recording and storage.

## b) Contractor's Quality Assurance Plan

The purpose of the Contractor's Quality Assurance Plan is to integrate the requirements of the Contract and the Contractor's quality assurance systems to deliver the Services.

The Quality Assurance Plan describes the methods and procedures, which the Contractor will apply for the execution of the Contract, including how the Contractor will:

(a) identify the quality requirements specific to the Contract;

(b) plan and execute the Services and Works to satisfy those requirements;

(c) inspect and/or test work and materials to ensure compliance with the quality requirements;

(d) record and monitor the results as evidence of compliance and

(e) ensure that prompt action is taken to correct non-compliance.

The Quality Assurance Plan shall clearly describe the systems, procedures and methods that will be used to deliver and monitor compliance of the Services.

## c) Health and Safety Management Plan

The purpose of the Health and Safety Management Plan is to foster a responsible attitude towards occupational health and safety and to comply with the provisions of the Law of Nepal and the requirements of the World Bank's Environmental and Social Standards.

Because of the nature of the Services, the Contractor may occasionally be exposed to hazardous situations, which could involve risk of various degrees of harm, to the Contractor's personnel and/or the public.

Situations will arise when it is not practical to eliminate or isolate significant hazards. In these situations, the Contractor must mitigate hazards by ensuring planned protection systems (e.g. equipment, clothing) are available and used. The Contractor's personnel and all sub-contractors must comply with the Health and Safety Management Plan at all times.

The Health and Safety Management Plan shall, when implemented in accordance with the plan requirements:

(a) Ensure the systematic identification of existing and new hazards on work site(s) and at depots, storage facilities, in offices or wherever activities are undertaken;

(b) Ensure the mitigation of significant hazards, where elimination and isolation are impractical;

(c) Ensure the provision and use of appropriate protective measures;

(d) Include emergency procedures for dealing with accidental spillage, pollution or imminent danger;

(e) Ensure regular review and assessment of each hazard identified and monitor own staff and subcontractor's exposure to these hazards;

(f) Ensure reporting and recording of work site safety incidents so health and safety problems can be addressed quickly and regularly. It is a requirement of this Contract that any such incident be advised promptly to the Engineer;

(g) Comply with all other health and safety aspects requirements of Nepalese law and regulations.

## d) Environmental and Social Management Plan

The purpose of the Environmental and Social Management Plan is to foster a responsible attitude to mitigating adverse environmental and social risks and impacts. The Environmental Management Plan shall comply with ESIA and ESMP of the project road.

Because of the nature of the Services, the Contractor's operations have the potential to cause adverse environmental impacts. Situations will arise when it is not practical to avoid such impacts. In these situations, the impacts must be mitigated by planned actions and protection measures, which must be employed.

The Contractor's personnel and all sub-contractors shall comply with the Environmental Management Plan at all times.

The Environmental and Social Management Plan shall, when implemented be in accordance with the plan requirements:

a) The means by which the environmental and social management systems will be supervised, monitored and audited to ensure compliance with the principles and objectives of the ESMP at all times;

b) Records to be prepared and maintained by Environmental and Social Management staff and communication procedures to be followed so that the Engineer and others associated with the Works (e.g. sub-Contractors) are kept fully informed on matters relating to the ESMP and applicable regulations throughout the Contract period;

c) Proposals to ensure that maintenance methods do not compromise the Contractor's commitment to the ESMP and compliance with all relevant statutory regulations;

d) An organizational structure showing the appointed environmental management staff and the responsibilities of environmental protection participants;

e) The names, addresses, telephone and fax numbers of all participants;

f) The criteria used for the appointment of the principal staff;

g) The proposed interactions and communications procedures between the Contractor's personnel and the environmental protection staff, including proposals for the communications facilities to be provided. In particular, the establishment of a regular communications and reporting system;

h) The frequency, coverage and intent of environmental management meetings together with the rationale for attendance;

i) Frequency, coverage and intent of regular environmental reports;

j) Methods proposed for promoting awareness of environmental protection issues among all personnel directly or indirectly associated with the maintenance works;

k) Provisions for storage of liquid, toxic and dust creating materials;

l) Waste control and management;

m) Materials handling;

n) Erosion prevention;

o) The powers vested in the environmental management staff that would enable them to take urgent, appropriate and direct action to prevent or correct environmental impacts;

p) The means by which environmental management matters will be communicated to Sub- Contractors to ensure effective compliance by subcontractors.

## e) Risk Management Plan

The Purpose of the Risk Management Plan is to ensure that uncertain events that may have adverse impacts on the integrity and condition of the road assets or on the Operational Service Levels are identified, analysed and placed under a proactive management regime. The Risk Management Plan shall, as a minimum, include:

(a) establishment of a risk register, in which all foreseeable adverse events are identified and assigned values of probability and consequence of occurrence;

(b) analysis of risks in which the impact of potential combinations of events is considered across a range of scenarios;

(c) identification of risk management strategies involving avoidance and mitigation of risks together with management strategies for residual risks;

(d) assignment of responsibility for risks to the organisations or individuals best able to manage them;

(e) a process for the regular review and updating of the risk register and the risk management plan.

## f) Emergency Procedures and Contingency Plan

The Emergency Procedures and Contingency Plan shall establish the roles, practices and procedures to be followed during and following the occurrence of natural phenomena with imponderable consequences, such as strong storms, flooding and earthquakes. The Emergency Procedures and Contingency Plan shall be developed by the Contractor and agreed with the Engineer and any other stakeholders the Engineer may identify.

The purpose of the Emergency Procedures and Contingency Plan is to ensure the safety of the Contractor's personnel and road users in the case of emergency and/or road closure. It should include:

(a) an effective communication and event recording system;

(b) the names, 24-hour contact telephone numbers and specific duties of the Contractor's personnel nominated to respond to an emergency event;

(c) the contact telephone numbers of other parties who need to be notified in cases of emergency events, e.g. police;

(d) detailed response procedures for all potential emergency events;

(e) possible detour routes in the event of road closure.

## g) Traffic Management Plan

The Traffic Management Plan establishes the practices for traffic management at work sites and shall comply with the relevant rules and regulations in Nepal. The Traffic Management Plan must be developed by the Contractor and agreed with the Engineer.

The objectives of the Traffic Management Plan are to:

(a) Clearly define and document the responsibilities and chain of command for the development, implementation and management of traffic control measures and systems,

(b) establish the minimum requirements for temporary traffic control,

(c) establish the minimum geometric, cross section and surfacing standards for temporary works,

(d) provide appropriate transitions and enable safe and efficient traffic flow into, through and out of work sites,

(e) protect the Contractor's personnel at all times,

(f) protect the Road and related assets and the Contractor's resources at all times, and

(g) meet the operational requirements for the Road.

The Traffic Management Plan must include at least the following:

(i) a documented process for preparation, review and approval of the Traffic Management Plan;

(ii) a document tracking and control system to ensure that only the latest operative copy of the Traffic Management Plan is in circulation;

(iii) 24-hour contact telephone numbers for Contractor, Engineer, Employer, emergency services and other stakeholders; and

(iv) layout diagrams, method statements, etc. for implementation of traffic control while undertaking each aspect of the Services (including site specific layout diagrams and method statements if the Services require traffic control measures not covered by standard codes of practice.

### h) Road Management Database

Data about the conditions of the road assets being maintained under this Contract are required for current and future reference. The Contractor shall prepare and maintain a road management database of accuracy and completeness appropriate to the uses for which it is intended, which shall be kept current at all times. The Contractor shall supply all information necessary to prepare and maintain this data. The following information is to be collected and updated:

- Road and bridge inventory
- Road condition and section rating
- Maintenance history

The Contractor shall undertake whatever actions may be necessary including detailed road condition surveys to obtain the above data and all information required to maintain the road management database.

The Contractor shall provide hard and electronic copies of the updated road management database and all relevant information to the Engineer. Report and subsequent updates shall be submitted every three months thereafter together with the relevant monthly progress report.

## (6) Inspection of Structures

All bridges and all culverts with span or diameter in excess of three (3) meters together with all earth retaining structures with a height in excess of three (3) meter and other significant structures shall be visually inspected at least once in 6 months to ensure that they are in a safe operating condition.

This inspection shall record:

(a) Vehicular damage to structures;

(b) Scour of foundations in watercourses and erosion of protective structures such as revetments, gabions and the like;

(c) Settlement of foundations, movement or rotation of abutments, wing walls and earth retaining structures;

(d) Significant corrosion of steel reinforcement in reinforced concrete members causing spalling of concrete;

(e) New or worsened deflection or cracking of reinforced concrete members;

(f) Corrosion of structural steelwork with significant loss of metal.

(g) Anything else that impairs the safe operating condition of the bridge.

Where defects appear to be worsening rapidly, the Contractor shall inform the Engineer without delay and shall take appropriate measures to ensure the safety of road users and employees.

Any non-compliance with the Operational Service Levels discovered during any inspection shall be recorded. The record of each defect shall include an accurate positional reference, description and dimensions of the defect and a photograph taken with a digital camera and bearing a date and time stamp. The record of each inspection shall be recorded. Upon completion of remedial works for each defect or group of defects, the record of works together with a further date and time stamped photograph shall be recorded as well and included in the Monthly Report.

## (7) Reporting

### *a) Inception Report*

Within 28 days after the Commencement Date of Phase 2, the Contractor shall submit an inception report to the Engineer. The report shall include the following:

- Initial condition survey
- Video survey
- Roughness survey
- Initial road management database
- Detailed maintenance program for the first 3months

The Contractor's initial condition survey of the roads, structures and other appurtenances shall be attended by the Engineer. The detailed results of the survey shall be recorded by the Contractor and submitted to the Engineer for confirmation.

The initial condition survey will establish a baseline of road conditions at the time of commencement of the Phase 2. The video survey shall be undertaken during daylight hours from the passenger's seat of a slow moving vehicle with the camera aligned towards the center of the road. Video shall also be taken of all bridges, major culverts and any other major structures to show the conditions of each structure from all angles. The Contractor shall

complete and formally submit to the Engineer two copies of the video record on DVD.

The roughness data is required to establish the actual roughness condition of the road at the time of commencement of the Phase 2. Roughness shall be measured using a method and equipment approved by the Engineer.

The Engineer shall confirm the accuracy of the initial condition survey within 21 days of his receipt of the inception report. The Engineer's opinion on the condition of any road asset or any item shall be final.

Interim Payment Certificates will not be released until such time as the inception report is approved by the Engineer.

***b)*** *Weekly Report to be submitted to the Engineer*

The Contractor shall prepare and submit weekly reports to the Engineer on all inspections, incidents, non-compliance with Operational Service Levels detected, remedial actions taken and other works executed by the Contractor. The format and the information to be supplied shall have to be approved by the Engineer. As a minimum information in weekly report shall be:

(i) Weather of each day of the week

(ii) Summary of general operating conditions

(iii) Recording of all non-compliances with Operational Service Levels detected

(iv) Record of maintenance activities

(v) Incidents, hazards and defects discovered and actions taken

(vi) Record of interactions with:

a. Police

b. Engineer's staff

c. Official bodies

d. Members of the public

The information provided in the weekly reports shall be summarized by the Contractor and included in the relevant sections of his Monthly Reports.

***c)*** *Monthly Reports*

The Monthly Report shall be submitted by the Contractor to the Engineer each month no later than the seventh calendar day of the following month; except for the reports under (b) and (c) below, which shall be submitted on the last working day of the respective month; shall comprise the following components:

(a) Narrative Report, describing Services and Works undertaken during the period, problems and issues arising and measures taken to deal with them.

(b) Contractor's Monthly Operational Service Level Inspection Report

(c) Monthly Evaluation Form for Compliance with Operational Service Levels

(d) Memorandum of Non- Compliance with Operational Service Levels – based on the Monthly Formal Inspections

(e) Memorandum of Non-Compliance with Operational Service Levels – based on Informal Inspections

(f) Report on all Maintenance Works and Services

(g) Report on any Emergency Works or other Works instructed by the Engineer due to defects to be repaired under the Defects Notification Period liabilities.

(h) Report on the compliance with the Contractor's Quality Assurance Plan, Health and safety Management Plan, Environmental Management Plan, Risk Management Plan, Emergency Procedures and Contingency Plan, and Traffic Management Plan.

(i) Report on Testing undertaken in accordance with the Contractor's Quality Assurance Plan or as required by the Engineer. Tests shall be undertaken in accordance with the specifications and appropriate standards and the detailed test results shall be submitted to the Engineer in the respective month.

(j) Summary of Incident Reports shall be submitted for each month (or a nil return).

(k) Updated Monthly Work Programme, detailing the location, timing and extent of all works the Contractor proposes to complete during the next month.

(l) Any other information as the Engineer may require from time to time.

***d)*** *Incident Reports*

Every occurrence of an Emergency that requires "Emergency Works" as defined in Section 3206 Emergency Works below shall be reported to the Engineer as described below:

(i) Landslides, defined as movement of earth or rocks encroaching on any carriageway or shoulder or blocking any drainage system or watercourse; reported without delay and in any event within one (1) hour of discovery.

(ii) Flooding, defined as large volumes of water occupying all or parts of the roadway, shoulders and adjoining areas; reported without delay and in any event within one(1)hour of discovery.

(iii) Any other event where the Contractor proposes to request issue by the Engineer of an Emergency Work Order; reported without delay and in any event within one (1) hour of discovery.

(iv) Road Accidents involving injury to people, significant vehicular damage and/or damage to the road surface, structures or road furniture; without delay and in any event within twenty-four (24) hours of discovery.

(v) Other Damage, including vandalism, theft, damage of highway furniture and structures; reported weekly.

Incident reports shall include:

(a) The precise location, timing and extent of the incident, supported by maps/plans and date/time stamped digital photographs;

(b) A brief narrative description of the circumstances.

(c) Where applicable, the names of the people and/or organizations responsible for causing the damage. This information is required so that the Engineer may seek recovery of the costs associated with repairing the damage.

Copies of incident reports shall be included in the monthly reports.

***e)*** *Handover Report*

No later than two (2) months prior to the Date of Completion of the Contract (Phase-2) the Contractor shall submit the Handover Report in draft to the Engineer. The purpose of the

Handover Report is to provide a smooth transition to the next contract and ensure that the next Contractor is aware of any outstanding issues.

The Report shall:

(a) Summarize any unresolved issues,

(b) Include the most recent complete set of data on the Road and related assets included in the Contract; and

(c) Provide the following details:

i. The current and up-to-date Programme of Performance including all sections and particularly the updated risk register;

ii. A schedule of outstanding defects and liabilities;

iii. Any unresolved issues, especially those that may impact on the next Contractor;

iv. Details of any sensitive issues;

v. Any on-going special monitoring/maintenance needs.

The final Handover report shall be submitted no later than 14 days prior to the Date of Completion of Phase 2.

## 9) Management Service Levels

Table 32.1 lists Management Service Levels (MSL), which relate to the overall management of the Works along with the corresponding Submission Dates and resulting PRPs for each MSL.

The Management Services cease on the Date of Completion of the Contract. If any requirements are unfulfilled at that time, the Employer and/or Engineer may procure their completion and recover the cost thereof from amounts due to the Contractor.

The Management Service Level Number (see MSL No column in Table 32.1) comprises a section reference to one of the sections above followed by a count within that section.

***Table 32.1 –Management Service Levels***

| Management Services | MSL No | Action | Submission Dates | Payment Reduction Point |
|---|---|---|---|---|
| Key Personnel | 1 | Key Personnel appointed, approved by the Engineer and on the site | At the Commencement Date of Phase 2 | 5 per day |
| Self Control Unit | 2 | Self Control Unit fully established | At the Commencement Date of Phase 2 | 5 per day |
| Site Regulations. | 3 (1) | Draft Site Regulations submitted to the Engineer, for approval, which shall not be unreasonably withheld. | At the Commencement Date of Phase 2 | 4 per day |
| | 3 (2) | Engineer either issues a notification of approval of the draft Site Regulations or notifies the Contractor that they are not approved, stating the specific reasons for rejection. | Within 14 days after submission of draft Site Regulations | N/A |
| | 3 (3) | Contractor submits revised draft Site Regulations | Within a further 7 days of Engineer's notification | 3 per day |

| Management Services | MSL No | Action | Submission Dates | Payment Reduction Point |
|---|---|---|---|---|
| | 3 (4) | Contractor implements Site Regulations and remedies breaches forthwith | N/A | 2 during the first week, 4 during the second week and 1 per day thereafter until the deficiency is remedied |
| Programme of Performance | 5 (1) | Contractor's Programme of Performance submitted in draft | At the Commencement Date of Phase 2 | 4 per day |
| | 5 (2) | Engineer either issues a notification of "no objection" to the Plan or notifies the Contractor that his Programme of Performance fails to comply with the Contract, stating the specific areas of "non-compliance" | Within 14 days after submission of Programme of Performance | N/A |
| | 5 (3) | Contractor submits a revised Program of Performance | Within a further 7 days of Engineer's notification | 3 per day |
| | 5 (5) | Contractor updates Road Management Data Base | Every six months together with the relevant Monthly Report | 1 per day |
| | 5 (6) | Contractor updates Programme of Performance annually or upon the occurrence of any material change to any of the constituent processes and procedures or upon the reasonable request of the Engineer and submits to Engineer | Within 14 days of each anniversary of the Commencement Date of Phase 2 or upon the occurrence of any material change to any of the constituent processes and procedures or upon the reasonable request of the Engineer | 4 per day |
| Inspection of Structures | 7 (1) | Contractor inspects all bridges and all culverts with span or diameter in excess of three (3) meters together with all earth retaining structures with a length in excess of 3 m and other significant structures at every six months to ensure that they are in a safe operating condition | As per Operational Plan | As per Programme of Performance |
| Inception Report | 8a | Submission of Inception Report | 28 days after the Commencement Date of Phase 2 | 2 per day |
| Weekly Reports | 8b | Submission of weekly Report | By the end of the following week | 2 per day |

| Management Services | MSL No | Action | Submission Dates | Payment Reduction Point |
|---|---|---|---|---|
| Monthly Report | 8c | Contractor submits the Monthly Report to the Engineer | No later than the 7th calendar day of the following month (starting with the report on the first month after the Commencement Date of Phase 2) | 3 per day |
| Incident reports | 8d | (i) Landslides, defined as movement of earth, rocks or debris encroaching on any carriageway reported without delay.<br>(ii) Flooding, defined as large volumes of water occupying all or parts of the roadway, shoulders and adjoining areas; reported without delay.<br>(iii) Any other event where the Contractor proposes to request issue by the Engineer/Employer of an Emergency Work Order; reported without delay. | Within two hour of discovery | 3 per hour |
| | | (iv) Road Accidents involving injury to people, significant vehicular damage and/or damage to the road surface, structures or road furniture without delay. | Within twenty-four (24) hours of discovery. | 2 per day |
| Handover Report | 8e (1) | Contractor submits draft Handover Report to the Engineer. | Within two months prior to the Date of Completion of the Contract | 10 per day |
| | 8e (2) | Engineer either accepts the report or notifies the Contractor of any inaccuracies or other inadequacy of the report. | Within 14 days after submission of the Handover Report | N/A |

| Management Services | MSL No | Action | Submission Dates | Payment Reduction Point |
|---|---|---|---|---|
| | 8b (3) | Contractor submits final Handover Report, in which the comments of the Engineer are addressed and the report updated with any changes in the information contained in therein. | One day prior to the Completion of the Contract | 15 per day |

## 3204. Operational Services

The operational services include the activities needed to maintain the satisfactory condition of the road assets, to assure their durability, as well as to satisfy the road users riding comfort requirement.

1. Operational Services consist of all interventions on the Roads and their right-of-way that are to be carried out on a regular or occasional basis by the Contractor in order to attain and maintain the defined Service Levels for the roads included in the contract. They also include numerous required and necessary activities related to the management and patrolling of the roads included in the Contract, throughout the entire contract duration.

Operational services include (but are not limited to) the following:

- Repairing road defects (such as potholes, rutting, ravelling, cracking in pavement, edge break, etc.);
- Maintenance of shoulders, verge, intersections, junctions with other roads, roundabouts, overpasses and other road surface areas;
- Repair works in embankment and cut slopes;
- Drainage system cleaning, maintenance, and repairs;
- Maintenance of bridges and other structures (such as retaining walls, culverts, etc.);
- Road cleaning and removal of trash and debris;
- Vegetation control (cutting vegetation);
- Maintenance of existing vegetation, such as trees (if required);
- Cleaning and maintenance of road signs and road markings, including their replacement needed due to wear and tear, minor damages, etc.;
- Maintaining traffic flows and road safety during Works carried out on the roads;
- Regular patrolling of the roads in line with the requirements;
- Establishing and operating the Contractor's Self-Control Unit;
- Road condition data collection and monthly reporting;
- Other types of reporting as required by the Contract;
- Providing assistance to road users in emergency situations resulting from traffic accidents or incidents, extreme weather events, natural disaster, etc.

2. Categories of Operational Service Levels:

OSL's are a set of performance criteria listed below which relate to the physical condition of roads and allow to evaluate the Contractor's compliance with Service Level requirements. OSL's are to be monitored continuously and measured monthly by the Contractor, as defined in the Operational Procedures. Results will be expressed and reported as either being "in compliance", or otherwise as "not in compliance" until the non-compliance has been remedied by the Contractor.

There are 3 Categories of Operational Service Levels:

a) Operational Service Levels Category A: They are the ones that are considered very important and critical and need to be rectified within a short period as given in table 32.2.

b) Operational Service Levels Category B: They are considered less critical. Although the Contractor is required to frequently control that these OSL are complied with, they will attract Payment Reduction Points as given in table 32.3 only if they are not complied and detected during the Joint Monthly Inspection.

c) Operational Service Levels Category C: They are controlled only once per year as given in table 32.4.

For each of the 3 Categories of Operational Service Levels the OSL number, the Item, the Operational Service Level and the Payment Reduction Points, Inspection methods etc are specified as well as described in table 32.2, 32.3.

## 3. Operational Service Levels Category A

Table 32.2: Operational Service Level for Category A

*Note:*

a. *Payment Reduction Points (PRP) is applicable for each one km section between two adjacent kilometer posts, unless specified otherwise for an Operation Service Level (OSL).*

b. *The value of each Payment Reduction Point (PRP) is given in* ***Sub-Clause 14.16 of Particular Condition of Contract, Part B - Special Provision****.*

| OSL No. | OSL Description | Method of Inspection | Payment Reduction Points (PRP) (*Note: PRP is applicable for each one Km section, unless otherwise specified for an OSL*) | Rectification Period |
|---|---|---|---|---|
| **OSL-A.1** | **Usability (Availability of each lane-km for use by traffic)**<br>The Contractor must ensure that the road with all its traffic lanes and other lanes is open to traffic and free of interruptions at all times. Permitted exceptions are:<br>• Lane closures following serious traffic accidents (not exceeding 4 hours after release of the accident site by Traffic Police);<br>• Lane closures due to vehicle breakdown<br>• Restrictions on traffic flow needed to carry out scheduled works on the road by the Contractor;<br>• Natural disasters; and<br>• Lane or road closures resulting from the direct instructions of the Traffic Police or other relevant authorities, in circumstances which are not the responsibility of the Contractor. | By driving on the road in a normal manner, utilizing a vehicle type that is similar to the vehicles typically used by road users. This requirement is not complied with if one or more traffic lanes are partially or fully interrupted or blocked at any point. The requirement is complied with if the road with all its travel and turning lanes is fully open to traffic and usable as designed. | • **If all travel lanes of the road are interrupted: Five** (5) points for each two-hour period of non-compliance.<br>• **If one or more travel lanes are interrupted, but at least one lane remains:** Two (2) points for each two-hour period of non-compliance. | Not Applicable |
| **OSL-A.2** | **Pavement defects (potholes, cleanliness, etc.)** | | | |

| OSL No. | OSL Description | Method of Inspection | Payment Reduction Points (PRP) (*Note: PRP is applicable for each one Km section, unless otherwise specified for an OSL*) | Rectification Period |
|---|---|---|---|---|
| **A.2.1** | **Potholes**<br>• Potholes (Max. allowed Diameter of any single pothole: 200 mm and Max. allowed depth of any pothole: 40 mm);<br>• Potholes (Max. number in any one (1) km section, with a diameter greater than 120 mm): 6; | Visual inspection. Measuring shall be made by using a tape measure, ruler or straightedge, transparent ruler or calibrated steel probe. | 3<br>(to be applied for each one km section that does not comply and for each day during which the non-compliance persists) | 14 days (for technically appropriate repairs (patching) to be carried out in line with Specifications or good international practices. However, since potholes also affect road safety, the Contractor is obliged to fill potholes at least temporarily with Cold Mix or other materials approved by the Engineer, within 48 hours of their detection. |
| **A.2.2** | **Cleanliness of the pavement, shoulders, and Right-of-Way**<br>*Cleanliness* refers to the *absence* of soil, debris, trash, rubbish, dead animals and other such objects. The terms "*cleanliness*" and "*absence*" are defined further below for the purposes of the contract.<br>The requirement is that the **road and shoulder surface** must always be "clean". | Visual Inspection | 3 (to be applied for each one km section that does not comply and for each day during which the non-compliance persists) | No Rectification Period when unclean conditions present a **safety risk**. To be cleaned during patrol. |

| | | | | |
|---|---|---|---|---|
| | Cleanliness* of the **pavement surface and shoulders** when unclean conditions present a **safety risk.** (Patrol in line with required patrol frequency) - To be cleaned during patrol. No Rectification Period.<br><br>Cleanliness* of the **pavement surface and shoulders** when there are no safety risks.<br><br>*Absence* of trash/rubbish **from the road's Right-of-Way**,** outside the pavement and shoulder surface.<br><br>*Definition of "*Cleanliness of pavement surface and shoulder",* **for rural areas**: The maximum number of items on the sealed surface and shoulders, with any dimension greater than 100mm (or smaller if posing an obvious safety hazard) within a continuous 100-meter centreline length shall be less than 5 (five).<br><br>*Definition of "*Cleanliness of pavement surface and shoulders",* **for built-up or populated areas**: The maximum number of items on the sealed surface and shoulders, with any dimension greater than 100 mm (or smaller if posing an obvious safety hazard) within a continuous 100-meter centreline length shall be less than 10 (ten).<br><br>**Definition of *"Absence from the Road's Right-of-Way":* The maximum number of clearly visible items on the surface of the Right-of-Way, on each side of the | | | 48 hrs when there are no safety risks.<br><br>28 days |

| OSL No. | OSL Description | Method of Inspection | Payment Reduction Points (PRP) (*Note: PRP is applicable for each one Km section, unless otherwise specified for an OSL*) | Rectification Period |
|---|---|---|---|---|
| | carriageway(s) and additional 3 meters away from the edge of the sealed shoulder, with any dimension greater than 200 mm, shall be less than 20 (twenty) within any continuous 100 meter center line length of the road. | | | |
| **A.2.3** | **Emergency removal of slides-** Slides of slope material onto the road are considered an Emergency if the quantity of the material slipped (in m3) in any one occurrence or event is above the threshold of 50 m3 per consecutive Kilometre Posts. If below threshold, removal is part of general maintenance obligations **(If the Contractor intends to invoke the contract provisions for Emergency Works, he must estimate the quantities and immediately inform the Engineer to get the Work Order)** | Visual Inspection for fallen slope material on shoulders or pavement. | 5 (to be applied for each one km section that does not comply and for each day during which the non-compliance persists) | Traffic flow to be re-established within a maximum of 6 hours, unless stipulated differently in Emergency Work Order. Period for removal of slide material is set by Engineer in Emergency Work Order. |
| **A.2.4** | **Removal of slides (not classified as Emergency)-** Fallen slope material must be removed (Visual Inspection for fallen slope material on shoulders or pavement)- Fallen slope material must be removed. | Visual Inspection for fallen slope material on shoulders or pavement. | 5 (to be applied for each one km section that does not comply and for each day during which the non-compliance persists) | For quantities below 50 m3: from pavement within 3 hours after detection; from shoulders and side drains within 48 hours after detection. |
| **A.2.5** | **Oil Spills on Pavements-** No oil spills more than 2 sq.m. shall be allowed at any location on pavement surface. | Visual | 5 (to be applied for each 100 m section that does not comply and for each day during which the non-compliance persists) | Oil spills shall be removed within 6 hours of detection. |

| OSL No. | OSL Description | Method of Inspection | Payment Reduction Points (PRP) (*Note: PRP is applicable for each one Km section, unless otherwise specified for an OSL*) | Rectification Period |
|---|---|---|---|---|
| **OSL – A.3** | **Drainage Inlet , Outlet, Drainage Pipe, Catch basin**<br>Contractor ensure that no more than 25% of flow area or cross section is blocked during **rainy season** | The percentage of obstruction is calculated for each type of drainage element, based on the measurement or estimate of obstructed cross-section areas. | 3 points per structure | 48 hours |

4. Operational Service Levels Category B

**Table: 32.3 Operational Service Levels Category B**

Note:

a. Payment Reduction Points (PRP) is applicable for each one km section between two adjacent kilometer posts, unless specified otherwise for an Operation Service Level (OSL).

*b.* The value of each Payment Reduction Point (PRP) is given in **Particular Condition of Contract Sub-Clause 14.16**.

| OSL No. | OSL Description | Method of Inspection | Payment Reduction Points (PRP) (*Note: PRP is applicable for each one Km section, unless otherwise specified for an OSL*) | Remarks |
|---|---|---|---|---|
| **OSL-B.1**<br>**OSB-B.1.1** | Drainage:<br>The Contractor must ensure that all drainage elements are structurally sound, clean and without obstructions (due to sediment or debris) which may reduce their normal cross-section and impede the free flow of water. The basic principle used to determine the cleanliness of drainage structures or devices is “the | Inspection is done visually to detect obstructions or defects. The percentage of obstruction is calculated for each type of drainage element, based on the measurement or estimate of obstructed cross-section areas. Compliance requires that drainage fulfils the requirements stated above. Determination of | 1 point **for each** culverts, manholes, catch pits, flumes and outlets to subsoil drains. | |

| OSL No. | OSL Description | Method of Inspection | Payment Reduction Points (PRP) (*Note: PRP is applicable for each one Km section, unless otherwise specified for an OSL*) | Remarks |
|---|---|---|---|---|
| | percentage of the theoretical cross-section of the structure or device which is obstructed". The obstructed percentage shall not exceed 20% of the theoretical cross-section. Also, erosion caused by runoff from drainage elements must be mitigated in order for (i) the structure itself to be protected against future structural failure and (ii) to avoid any significant damage and erosion to adjacent areas. Drainage elements include (but are not limited to), culverts, manholes, catch pits, flumes and outlets to subsoil drains. | structural soundness is based solely on the judgment of the Engineer. | | |
| **OSL-B.1.2** | Side drains<br>Maximum area of obstructed cross-section at any point: 20% | Inspection is done visually to detect obstructions or defects. The percentage of obstruction is calculated based on the measurement by tape. | 1 point per continuous 50 m of drains. | |

| OSL No. | OSL Description | Method of Inspection | Payment Reduction Points (PRP) (*Note: PRP is applicable for each one Km section, unless otherwise specified for an OSL*) | Remarks |
|---|---|---|---|---|
| **OSL-B.2**<br>**OSL-B.2.1** | **Pavement Defects:**<br>**Patching:**<br>Patching is the mandatory repair method for many different pavement defects.<br><br>Patches (i) shall be square or rectangular, (ii) must have squared edges cut with a blade or a similar tool, (iii) shall be level with the surrounding pavement, (iv) shall be made using materials similar to those used for the surrounding pavement, and (v) shall not have cracks wider than three (3) mm. | Patches shall have a smooth and regular surface, flush with the surrounding road surface. When checking with a straightedge extending across the surface of the patch in any direction, there shall be no deviation from the lower edge of the straightedge of more than 5 mm. Methods and equipment used for inspection:<br>• Visual inspection (for detection of shape and materials used);<br>• Straightedge (for patch evenness);<br>• Ruler (to check if patch is level with surrounding pavement); and<br>• Small transparent ruler (for measuring cracks). | 1 point per patch | |
| **OSL-B.2.2** | **Isolated cracking in pavement:**<br>An isolated crack is defined as a linear opening in the pavement with a width of | Crack widths are measured with a small transparent ruler. | **2** | |

| OSL No. | OSL Description | Method of Inspection | Payment Reduction Points (PRP) (*Note: PRP is applicable for each one Km section, unless otherwise specified for an OSL*) | Remarks |
|---|---|---|---|---|
| | more than three (3) mm, such as longitudinal cracks, transverse cracks and edge cracks.<br><br>The Contractor is obliged to seal all linear isolated cracks wider than three (3) mm. Sealing must be preceded by routing of the crack (if needed) and cleaning to ensure adherence of sealant material. The seal must ensure that water cannot enter the road structure through the crack<br>**Maximum width of unsealed cracks 3 mm wide must not exist 10m aggregated length per 100 m length of double lane roadway** | | | |
| **OSL-B.2.3** | **Multiple cracks in the pavement:**<br>This applies in cases of multiple visible cracks (such as alligator cracks, or block cracking, or cracks crossing each other). For multiple cracks, the "cracked area" is equivalent to a square or rectangle, parallel to the traffic lanes, which fully encloses the cracks, and where the closest crack is at least 0.25 m away from the sides of the square. | Detection of multiple cracks by visual inspection. Measurement of cracked areas by measuring tape, handheld measuring wheels or other appropriate measuring devices. The "cracked area" is equivalent to a square or rectangular area, parallel to the traffic lanes, which fully encloses the cracked area. | **2** | |

| OSL No. | OSL Description | Method of Inspection | Payment Reduction Points (PRP) (*Note: PRP is applicable for each one Km section, unless otherwise specified for an OSL*) | Remarks |
|---|---|---|---|---|
| | The requirement is as follows: The cracked areas shall not exceed ten (10) percent of any 50-meter section of road. Cracked areas exceeding 10 percent of any 50-meter road section must be repaired, with the Contractor proposing the repair method to the Engineer for approval. Repair methods are: (i) patching, with or without repair of underlying pavement layers, or (ii) applying a seal coat to the entire cracked area, or (iii) sealing of the individual cracks. For all repair methods, the repair must ensure that water cannot enter the road structure through the repaired area.<br><br>**For any 50-meter section of the pavement, the cracked area shall not be more than ten (10) percent of the pavement surface. Repairs must be performed as per the requirements.** | | | |

| OSL No. | OSL Description | Method of Inspection | Payment Reduction Points (PRP) (*Note: PRP is applicable for each one Km section, unless otherwise specified for an OSL*) | Remarks |
|---|---|---|---|---|
| **OSL-B.2.4** | **Rutting:**<br>Max. allowed Rutting depth 25mm<br>Max. allowed Rutting 5% of any one –km length | Measured with one ruler and one straightedge. Straightedge of three (3) meters length placed horizontally and perpendicularly across lane. Rut depth is measured as the space between the lower edge of straightedge and the lowest point of rut, using a small ruler with scale in mm. | **2** | |
| **OSL-B.2.5** | **Raveling of pavements:**<br>The maximum surface area of ravelling with in any continuous on-km centreline length shall be less than two (2) percent. | Detection of Ravelling by visual inspection. Measurement of ravelled areas by measuring tape, handheld measuring wheels or other appropriate measuring devices. The "ravelled area" is equivalent to a square or rectangular area, parallel to the traffic lanes, which fully encloses the ravelling. | **3** | |
| **OSL-B.2.7** | **Loose pavement edges:**<br>There shall not be loose pavement edges, or pieces of pavement breaking off at the edges. A one-km section is non-compliant if pavement edges are loose or broken off for a combined length of more than 5 meters. | Visual inspection and measurement by tape. | **3** | |
| **OSL-B.3** | **Paved Shoulders:** | | **3** | |

| OSL No. | OSL Description | Method of Inspection | Payment Reduction Points (PRP) (*Note: PRP is applicable for each one Km section, unless otherwise specified for an OSL*) | Remarks |
|---|---|---|---|---|
| | The criteria of OSL-B.2 (Pavement Defects) also apply for paved shoulders. In addition, paved shoulders shall always be adequately sealed to prevent water penetration, without deformations or erosions in excess of 15mm under a 3-meter straightedge in any direction. | | | |
| **OSL-B.4** | Bridges: | | | |
| **OSL-B.4.1** | Road surface, kerbs, guard rails and barriers must be in sound condition. Guardrails on bridges and access ramps must be painted or galvanized, and not deformed. | Visual inspection | **1 point per bridge** | |
| **OSL-B.4.2** | More than 90% of each expansion joint shall be clean, without major damage and shall not pose any hazard to vehicle. | Visual Inspection | 1 per bridge | |
| **OSL-B.4.3** | Contractor must ensure free flow of water under bridges and a clear, unobstructed channel at least equal to the structure opening for at least 50 meters upstream and downstream. Contractor must maintain design clearance under bridge. | Visual Inspection | **1 per bridge** | |

| OSL No. | OSL Description | Method of Inspection | Payment Reduction Points (PRP) (*Note: PRP is applicable for each one Km section, unless otherwise specified for an OSL*) | Remarks |
|---|---|---|---|---|
| **OSL-B.4.4** | Concrete Beams and all other structural parts must be in good conditions and fully functional. Minor and non-structural repairs must be carried out by Contractor as part of his normal Maintenance Services. | Visual Inspection | **2** | The Contractor shall immediately inform the Engineer for any erosion around bridge abutments, piers, abutments protection and and river training structures which maintenance will be carried under Emergency Work.<br><br>Minor repair is contractor's responsibility.<br>Structural damage to be notify to Engineer immediately. |
| **OSL-B.4.5** | There should be always smooth transition from approach road to bridge and from bridge to approach road.<br>The level difference of approach road at with in 1 m. distance from the end of bridge and bridge deck must not be greater than 15 mm. | Straightedge and ruler | **2** | |
| **OSL-B.5** | <u>Embankments, Slopes and Retaining walls:</u> | | | |
| **OSL-B.5.1** | Cut and Embankment slopes: 90% of area shall be stable and without deformations and erosions | Visual inspection | **2** | |
| **OSL-B.5.2** | Retaining Walls: Contractor must ensure adequate condition of 90% of their drainage. | Visual inspection | **2** | |

| OSL No. | OSL Description | Method of Inspection | Payment Reduction Points (PRP) (*Note: PRP is applicable for each one Km section, unless otherwise specified for an OSL*) | Remarks |
|---|---|---|---|---|
| **OSL-B.6**<br><br>**OSL-B.6.1** | **Road Signs, Line-marking and Road Furniture Regularity, Warning, Information Signs and Hazard markers:**<br><br>All signs as per drawings are in place, uniform intensity, clean, clearly visible day and night. | Visual Inspection | **1 per item** | |
| **OSL-B.6.2** | **Horizontal Road Markings:**<br>Have to be present, clearly legible during day and night, and firmly attached to the pavement. Maximum length of damaged or missing edge or centerline marking: 15 m per 100 m of road | Visual Inspection and tape measurement | **2 per 100 m length** | |
| **OSL-B.6.3** | **Delineators and additional road furniture:**<br>Have to be present, clean, structurally sound, firmly attached to the surface and clearly visible day and night. | Visual Inspection | **1 per item** | |
| **OSL-B.6.4** | **Mileposts, guidance posts and similar markers:**<br>Have to be present, visible, complete, clean, legible and structurally sound; surface painted or otherwise covered. | Visual Inspection | **1 per item** | |
| **OSL-B.6.5** | **Crash barrier, Guard rail:**<br>Have to be present, clean, without any structural damage, without corrosion. | Visual Inspection | **2** | Up to 10 m length is Contractor's responsibility. In case of Damage of Crash barrier greater than 10 m length, the Contractor shall |

| OSL No. | OSL Description | Method of Inspection | Payment Reduction Points (PRP) (*Note: PRP is applicable for each one Km section, unless otherwise specified for an OSL*) | Remarks |
|---|---|---|---|---|
| | | | | inform to Engineer to repair/reinstate it as Emergency Work. |
| **OSL-B.6.7** | **Vegetation growth Control:**<br>Maximum average permitted height is 25 cm in Urban highway shoulders, medians, traffic islands and highway verges, grass in rest areas (including around rest area furniture).<br><br>Maximum average permitted height is 40 cm in Non-urban roads and large vegetated areas, including surface water channels with longitudinal gradient ≥ 3%.<br><br>Maximum average permitted height is 25 cm around:<br>• Edge marker posts<br>• Signposts<br>• Bridge end and culvert markers<br>• Guardrails<br>• Lighting Columns<br>• Bridge abutments<br><br>Vegetation-free or near Vegetation-free around:<br>• Culvert headwalls<br>• Side drains<br>• Kerb and channel | The height of vegetation it is defined as the vertical distance between the ground and the highest point of the plant. It is measured by using a ruler or measuring tape. Clearance is also measured with a ruler or tape; it is defined as the distance between the lowest point of the tree (or other plant) above the road surface.<br>The average height of vegetation in a one km section will be equal to the average of five values measured at points selected by the Engineer, with each point being at least 10 meters apart from the next. | **3** | |

| OSL No. | OSL Description | Method of Inspection | Payment Reduction Points (PRP) (*Note: PRP is applicable for each one Km section, unless otherwise specified for an OSL*) | Remarks |
|---|---|---|---|---|
| | • All sealed surfaces<br>• Bridge decks. | | | |

**OSL-B.7 *: Performance of the Self Control Unit***

The correct execution of PBMC's depends to a large degree on the adequate functioning of the Contractor's Self-Control Unit – SCU (as defined in the Specifications) and on the accuracy of the data provided by the SCU to the Engineer. The Engineer will assess the performance of the SCU by comparing the data provided by the SCU in the Monthly Compliance Tables for Maintenance Services with the data measured or observed during the Formal Inspection.

The Contractor must ensure that the data included in the Monthly Compliance Tables for Maintenance Services prepared by the SCU and provided to the Engineer prior to the Formal Inspection is accurate and based on actual measurements or observations carried out by the SCU staff. The Engineer will verify the data provided by the SCU in the Monthly Compliance Tables through Formal and Informal Inspections.

If the Engineer finds that the data provided by the SCU for any road or road section is incorrect for more than 20% of the individual data on OSL´s A.1 to B.7 for a road or road section, this will be considered as a non-compliance with OSL-B.7 and will trigger the application of the corresponding payment reduction under OSL-B.7 for the same road.

Furthermore, if a situation of non-conformance with B.8 continues for more than six months, the Employer/Engineer will have sufficient grounds to terminate the contract as stipulated in the General Conditions of Contract, Clause 59 on "Termination" if he so desires.

**Method of assessment:** The assessment is done on the basis of the verification by the Engineer of the 20 performance criteria and sub-criteria included under OSL-A1 to OSL-B6. The 20% threshold limit corresponds to four (4) criteria. If for any road or road section the information provided by the Contractor's SCU in the Compliance Tables for five (5) or more criteria is incorrect, then this constitutes non-compliance with OSL-B.7 for that road or road section. An example for calculation is provided in the Operational Procedures.

**Payment reduction for non-compliance:** 20 points to be applied for each road or road section for which incorrect information was provided by the Contractor in the Monthly Compliance Tables for Maintenance Services for more than 20% of the OSL criteria or sub-criteria.

*[Note: The figures in the above text for the "Method of Assessment" and "Payment reduction for non-compliance" must be adjusted if the number of OSL criteria and sub-criteria is either reduced or increased. The OSL's proposed in these Sample Specifications result in a total of 20 criteria and sub-criteria, but this number will be different if additional OSL's are added or the number of OSL's is reduced.]*

### (5) Operational Service Levels Category C – Pavement Roughness

**Table 32.4 Operational Service Levels Category C – Pavement Roughness**

| OSL No. | OSL Description | Method of Inspection | Payment Reduc Points (PRP) | Rectification Period |
|---|---|---|---|---|
| OSL-C.1 | Roughness of Pavement of Highway (IRI): Lane-wise average IRI of the entire contract length shall less than:<br>a) 3.3 m/km at the end of first year of Phase 2<br>b) 3.5 m/km at the end of second year of Phase 2<br>c) 3.7 m/km at the end of third year of Phase 2<br>d) 4 m/km at the end of fourth year of Phase 2 | An equipment meeting the Class III: Response Type Road Roughness Measuring System (RTRRMS) precision shall be used to measure the IRI. The measure of roughness shall be made in a continuous manner in the wheel tracks of each lane of the main carriageway. | 1000 for entire contract length per month after six months (rectification period) of detection | Six (6) months |

The indicator to be used to determine the road roughness will be International Roughness Index (IRI), whose measure unit is expressed in meter per Kilometer (m/Km).
An equipment meeting the Class III: Response Type Road Roughness Measuring System (RTRRMS) precision shall be used to measure the IRI. The measure of roughness shall be made in a continuous manner in the wheel tracks of each lane of the carriageway. The equipment shall be calibrated/validated in accordance with the manufacturer's recommendations and from the observation during previous use.
The IRI measurement shall be made in the presence of the Employer's and/or Engineer's Representative.

## 7. Operational Procedures

The Operational Procedures described in this Section are to be applied in the implementation of Performance-based Road Contracts.

### 7.1 Verification of Operational Service Levels

The Contractor's compliance with Operational Performance Measures (OSL's) is to be assessed and verified through Formal Inspections, Informal Inspections and other inspections. This section specifies (i) the procedures to be applied for scheduling and carrying out Inspections and (ii) the application of payment reductions in cases of non-compliance of the Contractor with required Service Levels or other requirements.

#### 7.1.1 Inspections

This section specifies the various types of inspections to be carried out and the procedures to be followed for those.

##### 7.1.1.1 Formal Inspections

The main purpose of the regular Formal Inspections (Joint Inspection) is to verify the correctness of the information presented by the Contractor in his Monthly Compliance Tables for Maintenance Services about his own compliance with the Service Level requirements. The results of the Formal Inspections are used for finalizing the monthly Interim Payment Certificate.

Formal inspections are scheduled in advance by the Engineer and carried out by the Contractor through his Self-control Unit (SCU) with participation of the Engineer (Supervision Consultant). The regular Formal Inspections are to take place within first week of each month, but additional Formal Inspections may be scheduled by the Engineer at any time.

The Engineer must inform the Contractor's Self-Control Unit of the date and hour of the beginning of the Formal Inspection at least 24 hours in advance. The scheduling of inspections between the Engineer and the Contractor's Self-Control Unit (SCU) must be in writing, which may include the use of e-mail. The Engineer shall use the official e-mail address of the SCU which the Contractor must indicate in writing to the Engineer at the beginning of the Contract period.

The normal start date for the regular Formal Inspections is on the first work day of each month. This is to avoid any important time gap and change of physical road conditions between the date of the Contractor´s Monthly Compliance Tables for Maintenance Services and the actual road conditions during the regular Formal Inspection.

Formal Inspections shall typically take between 1 and 3 full days. The share of the network to be covered by the monthly Formal Inspection is at least *40% every month*. This percentage is however not an upper limit or a maximum. If the Engineer suspects widespread non-compliances along the network, he should expand the length of roads to be covered during the Formal Inspection which could reach up to 100% percent of the roads included in the contract. In such cases the Formal Inspection may take longer than 3 days. The Formal Inspection can be done for one continuous stretch of road, or for separate road sections scattered over the network covered by the contract. Each formal inspection will normally (but not necessarily) cover mostly sections which were not inspected during the previous Formal Inspection, but it may also cover places where non-compliances were detected during the previous Inspection.

The specific roads or roads sections to be covered by the Formal Monthly Inspection are to be selected by the Engineer, but only **after** having received the Contractor´s Monthly Compliance Tables for Maintenance Services. They are not to be defined or agreed prior to the Contractor having issued and transmitted to the Engineer the Monthly Compliance Tables for Maintenance

Services.

The Contractor is obliged to be present at the date, hour and location specified by the Engineer, providing the physical means (including equipment) needed for the inspection. Both must have a signed hardcopy of the Contractor's Monthly Compliance Tables for Maintenance Services in hand (which shall cover the entire road network included in the contract). The main purpose of the Formal Inspection is to verify the information provided by the Contractor in his Compliance Tables, on his on compliance with Service Level requirements.

Should the Contractor fail to appear for (or participate in) a scheduled Formal Inspection, having been requested to do so with at least 24 hours' notice, then the Engineer may carry out the Formal Inspection without participation of the Contractor´s SCU staff. In such case, the determination of the Engineer as to the nature and extent of the defects and non-compliances detected shall be final and binding, with no possibility of appeal or objection by the Contractor.

Also, should the Contractor fail to submit his Monthly Compliance Tables for Maintenance Services at the end of the calendar month, the Engineer may nevertheless schedule the corresponding Formal Inspection to be carried out in order to establish the degree of compliance of the Contractor with the Operational Service Level (OSL's). Such failure to submit the Monthly Compliance Tables is also a non-compliance with the corresponding Management Performance Measure.

During the Formal Inspection the Engineer and the staff of the SCU shall travel along the road and stop as necessary, while verifying the information provided by the SCU in the Standard Compliance Tables. This is to ensure that the Contractor is immediately aware of any non-compliances identified by the Engineer. During the Formal Inspection any errors, discrepancies or misrepresentations in the Compliance Tables presented by the Contractor, as well as their locations and length, must be noted by the Engineer, communicated verbally to the Contractor and corrected on the Compliance Tables for Maintenance Services.

In addition, the Engineer shall also record any existing non-compliances which had already been recorded during the previous month(s) and which have not been remedied by the Contractor within the Rectification Period and apply the payment reductions for the non-compliance.

Within three (3) days following the Formal Inspection, but not later than the 7$^{th}$ day of the calendar month, the Engineer will prepare a brief Memorandum in which he shall (i) describe the general circumstances of the Formal Inspection, including date, road sections inspected, persons present, etc., (ii) show a list of all non-compliances detected during the Formal Inspection and (iii) show the Rectification Periods for remedying each non-compliance. The specific Rectification Period for each non-compliance shall count from the last day of the Formal Inspection during which the non-compliance was detected.

The Engineer shall use the corrected Monthly Compliance Tables for Maintenance Services for calculating the payment reductions for OSL's, and the total amount to be paid for Maintenance Services. The Engineer will then immediately transmit his Memorandum and the corrected Compliance Tables to the Contractor, as input for the Contractor's Monthly Statement.

#### 7.1.1.2 Informal Inspections

The Engineer will also carry out Informal Inspections of the roads covered by the Contract. The Engineer may do so on his own initiative, at anytime and anywhere on the roads included in the contract. The Engineer must use his own means for those inspections. If the Engineer detects any road sections where the Service Level criteria are not met, he shall promptly inform

the Contractor in writing (which may be by e-mail) of the defect identified, including its location, in order to enable the Contractor to take remedial action as soon as possible. The defect identified in Informal Inspections are to be rectified by Contractor within Rectification Periods mentioned in Table 32.2 for OSL Class A and within 28 days for OSL Class B.

The conduct of Informal Inspections by the Engineer and the notification of any identified non-compliances in no way affects the requirement for the Contractor to continuously monitor road conditions and his own compliance with required Service Levels, and to rectify all defects. It is the duty of the Contractor's SCU, not of the Engineer, to identify defects and ensure their rectification in a timely manner.

#### 7.1.1.4 Physical means needed for Inspections

The physical means needed for the various types of inspections will be provided by the Contractor, with the exception of the means needed for Informal Inspections, which the Engineer will carry out using his own means.

### 3205 Payments

***1)*** *Basis of Payments*

All works and services performed in Phase 2 are deemed to be covered and paid for by the Monthly Lump Sum per kilometer indicated in the Bill of Quantities. Only Day works and Emergency Works shall be paid on unit price bases as specified in the Bill of Quantities.

The works and services shall cover all costs associated with Contract obligations during Phase 2, which are not specifically provided for elsewhere, including (but without being limited to) the provision of insurances, security, implementing quality plan requirements, all social, environmental, safety and traffic management requirements, conducting various inspections, surveys, etc.

***2)*** *Payment Reductions*

In accordance with these Specifications, payment reductions are applied in case of non-compliance with Operational Service Level requirements.

Where the Contractor fails to comply with Operational Service Level, the Engineer shall deduct moneys from payments due under the Contract. Payment Reduction Points are specified for each non-compliance with Service Levels.

For Operational Service Levels Category A, the Payment Reductions Points shall be applied when the Engineer detects the non-compliance and communicates the non-compliance to the Contractor. After receipt by the Contractor of the communication of the Engineer concerning the non-compliance, the time starts for the Contractor to rectify the respective non-compliance within the Rectification Period in Table 32.2. Payment Reduction Points shall be applied if the Contractor does not rectify the non- compliance within the Rectification Period. *For each additional Rectification Period in*

*which the Contractor does not rectify the non-compliance further Payment Reduction Points shall be applied until the non-compliance has been rectified. If the same non-compliance is not rectified within one month after the date of the first detection, the Engineer may contract a third party to rectify the non-compliance at the cost of the Contractor.* The same procedure shall be applied if the Contractor detects a non-compliance, except that no Payment Reduction Points shall be applied for the detection of the non-compliance.

For the Operational Service Levels Category OSL-B1 to OSL-B-6, the Payment Reduction Points (as per table 32.3) shall be applied immediately for any non-compliance of OSL detected in the Formal Monthly Inspection (Joint Monthly Inspection). If such non-compliances are not rectified within 28 days of first detection then there after one (1) Payment Reduction Point shall be applied (for each non-compliance) for each calendar day till the non-compliance is rectified.

If the same non-compliance is still not rectified until the following Joint Monthly Inspection, the Engineer/Employer may contract a third party to rectify the non-compliance at the cost of the Contractor.

For non-compliance of Operational Service Level OSL-7 the Payment Reduction shall apply for each case of non-compliance.

For the Operational Service Levels **Category C**, The Payment Reduction Points shall be applied when the Contractor does not rectify the non-compliance within the Rectification Period. For any further period of one month, in which the non-compliance is not rectified, the Payment Reductions Points shall be applied again, until the non-compliance is rectified.

**Contractor's obligation to inform Engineer about completed remedial measures:** As soon as the Contractor has remedied the causes of a non-compliance with an OSL, he is obliged to inform the Engineer accordingly in writing (which can be by e-mail) and to attach any supporting evidence, such as photographs or video. The Engineer shall then decide if a follow-up inspection must be scheduled to verify if the Contractor has remedied the non-compliance, or otherwise if the Engineer accepts the evidence provided by the Contractor as proof for the non-compliance having been remedied. If the Contractor fails to provide such information to the Engineer in writing, the Engineer shall continue to apply the further payment reduction until such time when he receives the information from the Contractor on the remedial action having been taken.

**Correct reporting by the SCU (OSL-B.7):** As explained above, it should not be the Engineer having to point out non-compliances with OSL's to the Contractor. Instead, it is the Contractor's Self-Control Unit (SCU) who must proactively identify any non-compliances and report those in the Monthly Compliance Tables for Maintenance Services. The incentive for doing so is provided through OSL-B.7 titled "*Performance of the Contractor's Self Control Unit*". If for any road or road section the SCU has reported incorrectly more than 20% of the individual data for OSL, then there is non-compliance with OSL-B.7 and the corresponding payment reduction will be applied. A Sample Calculation is provided further below in table 32.5.

**Non-recoverability of payment reductions:** Payment reductions that have been applied cannot be recovered later, even after the non-compliance which has been the cause of the payment reduction has been remedied.

**No time limit for payment reductions:** If the Contractor fails to remedy a non-compliance for which a payment reduction has already been applied during a Formal Inspection, the respective payment reduction will continue to be applied in the same way to the following Monthly Statement(s) for that particular cause of non-compliance, until the non-compliance has been remedied, without a time limit being applied.

**Multiple non-conformances and limitation for payment reduction:** Payment reductions due to specific non-conformances are cumulative. If a one-km section of road has several non-compliances, then the payment reduction to be applied is the sum of the payment reductions for each individual non-conformance. When an OSL (such as OSL-B.2) includes a group of Sub-Measures (e.g. patching, cracking in Pavement, Potholes, etc.), then if the road suffers from several of these defects, the overall Payment Reduction is equal to the sum of each individual payment reduction per type of defect. For accumulated OSL non-conformances within any one-km section, the maximum cumulative payment reduction in one month shall however be limited to 200 percent of the monthly lump-sum amount for Maintenance Services payable for that one km of road.

*3) Sample calculation for OSL-B.7*

OSL-B8 refers to the correctness of the information provided in the SCU´s Monthly Compliance Tables for Maintenance Services. Non-compliance with OSL-B.7 is triggered if the data set supplied by the Contractor´s SCU in the Monthly Compliance Tables for Maintenance Services for a road or road section is incorrect for more than 20% of the individual data on OSL´s. Compliance with OSL-B.7 is calculated by comparing the data supplied by the Contractor in the Compliance Tables with the verified and corrected data on OSL´s provided through the Formal Inspection. The payment reduction is calculated as follows:

Table 32.5 **Sample Calculation for payment Reduction of OSL-B.7**

OSL-B.7 Payment Reduction Point for Non-compliance : **25**

| **Data No.** | **OSL List** | **Non-compliant length (km)** | | |
|---|---|---|---|---|
| | | Data from SCU Monthly Compliance Tables | Data from Monthly Inspection | Incorrect Data supplied by SCU* |
| 1 | OSL-A.1 | 0 | 0 | No |
| 2 | OSL-A.2.1 | 1 | 2 | **YES** |
| 3 | OSL-A.2.2 | 2 | 2 | No |
| 4 | OSL-B.2.1 | 2 | 4 | **YES** |
| 5 | OSL-B.2.2 | 0 | 0 | No |
| 6 | OSL-B.2.3 | 0 | 0 | No |
| 7 | OSL-B.2.4 | 0 | 0 | No |
| 8 | OSL-B.3.1 | 0 | 4 | **YES** |
| 9 | OSL-B.4.1 | 2 | 2 | No |
| 10 | OSL-B.4.2 | 0 | 0 | No |
| 11 | OSL-B.4.3 | 0 | 0 | No |
| 12 | OSL-B.4.4 | 0 | 0 | No |
| 13 | OSL-B.4.5 | 0 | 0 | No |
| 14 | OSL-B.5.1 | 1 | 3 | **YES** |
| 15 | OSL-B.5.2 | 0 | 0 | No |
| 16 | OSL-B.6.1 | 0 | 1 | **YES** |
| 17 | OSL-B.6.2 | 1 | 1 | No |
| 18 | OSL-B.6.3 | 0 | 0 | No |
| 19 | OSL-B.6.4 | 0 | 0 | No |
| 20 | OSL-B.6.5 | 0 | 0 | No |

Here, total No. of Data: **20;** No. of "Yes": **5**

20% of 20 OSL´s would be 4 OSL's, which means that if the number of "Yes" is higher than 4 then the Payment reduction is triggered and to be applied.
In this case there is 5 "Yes" which is greater than 20% (i.e. 4), so Pavement reduction on OSL-B.7 applies.
Payment reduction point: 25 point
Payment reduction Amount = 25x1000 = NPR 25,000.00
(Taking payment reduction NPR 1,000.00 per point)

* Only applies if road condition is "worse" than reported by SCU, not if better

## 3206 Emergency Works

### (1) Description of Emergency Works

The Contract includes Provisional Sum for Emergency Works to be executed during Phase 2 of the Contract. Emergency Works are designed to repair damage to the roads caused directly by natural or manmade phenomena with consequences occurring either in the area of the roads or elsewhere, but with a direct impact on the roads. Such phenomena may include: tropical depression, rainfall and winds of extraordinary intensity and/or duration, major landslides within or outside the right-of-way, floods with water levels above normal maximum flood levels, earthquake, major accidents or similar events causing considerable damage to the road.

Damage requiring repair by Emergency Works can be generally described as for example:

(i) complete destruction of a culvert or other similar structure,
(ii) road washouts or other damage equivalent to more than 50 m3 of material on a road section of 500 meters length,
(iii) submersion of road along more than 100 meters length provided that the submersion is, in the opinion of the Engineer, not the result of deficiencies in the drainage system or of insufficient maintenance of drainage structures, among others.

Eligible damage does not include “normal” damage, such as trees falling on the road, minor erosion of the road and embankments, and minor damage caused by traffic accidents, which shall be made good by the Contractor as part of the Works. Providing full support to the police and road users and arranging of signing and clean-up of the site or similar works as necessary are part of Works.

### (2) Obligations of Contractor during Emergencies

During execution of Emergency Works the Contractor shall ensure that Operational Service Levels on the road are maintained. In particular, the Contractor shall ensure the normal use of the road including those sections affected by emergencies.

The Contractor shall take the measures necessary to reopen the road to traffic at the earliest possible time and maintain the road open during Emergency Works, without being entitled to any separate compensation for those measures. If necessary, the Contractor shall provide temporary detour roads as approved by the Engineer.

### (3) Minor Works

Minor works that are below the thresholds indicated in the following Table 32.6 shall be carried out by the Contractor as part of the normal PBM Works, and a Work Order is not required. The Contractor shall inform the Engineer of the damage and the rectification works undertaken.

Table 32.6: Thresholds of Some Activities for the Normal PBM Works

| Activity | Unit | Maximum quantity per event per Kilometer to be rectified under normal PBM Works |
|---|---|---|
| Slides of material | m3 | 50 |
| Asphalt concrete | m3 | 5 |
| Sub-base course | m3 | 10 |
| Base course | m3 | 12 |
| Concrete (of any type) | m3 | 5 |

| | | |
|---|---|---|
| Stone masonry | m3 | 10 |
| Gabion masonry | m3 | 10 |
| Embankment | m3 | 25 |
| W-Beam Crash barrier | Rm | 10 |

**(4)** Procedure for Requesting Emergency Works

When damage falling under Emergency Works results in a reduction of any of the Operational Service Levels specified in this Contract, the Contractor shall make a formal request to the Engineer to allow him to carry out Emergency Works to rectify that damage.

In such a case, the Contractor shall (i) immediately inform the Engineer of his intention to do so by telephone, SMS or other means, (ii) document the circumstances of the event and the damage caused through photographs, video and other suitable means, (iii) prepare a written request stating the type of works he intends to carry out, their exact location, the estimated quantities and costs, the time required to complete the works and any other information as the Contractor may deem necessary. The request for Emergency Works shall be made immediately after the Contractor becomes aware of the existence of the damage.

After receipt of the request, the Engineer shall evaluate the request based on a site visit, and issue a Work Order with consent of Employer to carry out the Emergency Works. However, to re-established traffic flow Engineer can issue Emergency Work Order. The Work Order shall specify the type of works, their estimated quantities, estimated valuation, and the time allowed for their execution.

**(5)** Operational Service Levels

The Emergency Works shall comply with the requirements of the Specifications and/or applicable Standards and be subject to the Engineer's approval. There is no individual Operational Service Level requirement for these works.

The Emergency Works are intended to assist the Contractor in bringing the road up to the required Operational Service Levels within the time frame allowed by the Engineer in the corresponding Work Order.

Failure to bring the road to the required Operational Service Levels within the stated time frame shall result in deductions of the Monthly Payments at the rate of 0.5% per day of Emergency Work. The payment deductions shall not be higher than 15% of the amount for the Emergency Works.

The Contractor shall correct all non-conformances relating to Emergency Works as specified in the Work Order prior to the Time for Completion of Phase 2. If any section of the road does not meet the Operational Service Levels at the Time for Completion due to uncompleted Emergency Works, Liquidated Damages shall apply.

If the maximum amount of Liquidated Damages has been exhausted and the non-conformance on road has not been rectified, the cost of remaining rectifications shall be recovered from Retentions, Performance Security, any/or any other monies due or that may become due to the Contractor.

**(6)** Measurement and Payment

The quantities of completed Emergency Works shall be measured net on drawings or measured at Site, whichever is more appropriate as determined and approved by the Engineer. Where required by the Engineer, the Contractor shall verify both quantity and quality of the completed works.

Valuation of the completed Emergency Works shall be as established in the corresponding Work Order issued by the Engineer for the particular work using appropriate BOQ Unit Rates and Prices or Dayworks Rates, if appropriate.

For the emergency works the budget is allocated in the Dayworks and/or the Provisional Sums, as appropriate for the payment of the works. The payment for emergency works shall be made at existing Bill of Quantities (BoQ) rates or at appropriate Dayworks rates for each corresponding BoQ pay items with the CPA (Change in Price Adjustment). Such payments shall not be subject to additional overhead as per GCC Clause 13.4 (b) because of the fact that the BoQ and Dayworks rates quoted by the Contractor are with his overhead.

# Add clause 3300

### 3300 Contractor's Representative and Key Personnel

The followings are minimum key specialists required to execute the contract, taking into account the nature, scope, complexity and risks of the contract.

Requirement of Contractor's Representative and Key Personnel

**Contractor's Representative and Key Personnel**

| Item No. | Position/specialization | Relevant academic qualifications | Minimum years of relevant work experience |
|---|---|---|---|
| 1 | Contractor's Representative | Bachelor's Degree in relevant discipline. | 5 years working experience on construction contracts |
| 2 | Highway Engineer/Civil Engineer | Bachelor's Degree in Highway/Civil Engineering | 5 years working experience on Road contracts of similar nature |
| 3 | Structural/Bridge Engineer | Bachelor's Degree in Civil Engineering | 5 years working experience in bridge/structure works |
| 4 | Environmental | Bachelor's degree in relevant environmental subject | 3 years working experience on environmental safeguard works |
| 5 | Health and Safety | Bachelor's degree in relevant subject | 2 years working experience on health and safety works |
| 6 | Social | Bachelor's degree in relevant subject | 2 years working experience on social safeguard works |
| 7 | Sexual Exploitation, Abuse and Harassment | Bachelor's degree in relevant subject | 2 years of working experience on monitoring and managing risks related to gender-based violence or addressing issues related to *sexual abuse and sexual harassment.* |

# APPENDICES TO SPECIAL PROVISIONS

## List of Appendices

Appendix 1: List of Standards

Appendix 2: Site Laboratory

Appendix 3: Laboratory Equipment

Appendix 4: Project Signboard

Appendix 5: Environmental and Social Management Plan (ESMP)

Appendix 6: Terms and Conditions of Supervisor and Length-Workers

## Appendix 1: List of Standards

The Contractor shall provide for the use of the Engineer, in accordance with the Specifications, the latest editions of the following Standards, Publications and Codes of Practice; or manuals containing details of these Standards. All standards provided shall become the property of the Engineer/Employer on completion of the contract.

### NEPAL STANDARDS (NS)

NS 169-2045 (1988) Requirements for mild steel wire (for Gabions)

Indian Standards

MORT&H Specifications for Road and Bridge Works 5 th Revision 2013

### INDIAN STANDARDS (IS)

IS: 73 - 2013 Paving Bitumen Specification

IS: 217 - 1988 Cutback Bitumen- Specification

IS: 1597-1992 Code of Practice for construction of stone masonry

**Part 1: Rubble stone masonry**

IS: 2116-1980 Sand for masonry mortars

IS: 2250-1981 Method of Test for cement mortar

IS: 2386-1963 Method of Test for Aggregates (Parts 1-6)

IS: 2720 Method of Test for Soils

IS: 6241-1971 Method of test for determination of Stripping value of Aggregates

IS:1203-1978 Determination of penetration.

IS:1205-1978 Determination of softening point

IS:1206-1978 Determination of viscosity

IS: 1208-1978 Determination of ductility

IS:1209-1978 Determination of flash and fire point

IS:4031- Fineness and Setting time for Cement

IS:4301- Soundness and Compressive Strength of Cement

IS:1079,2062&1161,2074-Traffic Sign and km post

### BRITISH STANDARDS (BS)

BS: 812-1975Testing Aggregates

Part 1: Methods for determination of particle size and shape.

Part 2: Methods for determination of physical properties

BS: 1377Methods of test for soil for civil engineering purposes

BS: 1881Methods of testing concrete,

**AMERICAN PUBLICATIONS & STANDARDS (ASTM/AASHTO)**

AASHTO Part I: Standard Specification for Materials

Part II: Method of Sampling and Testing

**NRRL Publications**
**OTHER PUBLICATIONS**

In addition, the Contractor is to be familiar with and be able to provide, in part or in full where possible, to the Engineer on a temporary basis the latest editions of the following Standards and/or Publications, which are mentioned in the most relevant Sections of the Standard Specifications for Road and Bridge Works, when so requested.

**NEPAL STANDARDS (NS)**

| | |
|---|---|
| NS: 40 -2040 (1983) | Specification for High Density Polythene Pipes |
| NS: 80 -2042 (1985) | Specification for Reinforced Concrete Pipes |
| NS: 84 -2042 (1985) | Specification for Reinforcing Steel |
| NS: 168-2045 (1988) | Specification for Barbed Wire |
| NS: 191-2045 (1988) | Specification for Reinforcing Steel |
| NS: 199-2046 (1989) | Specification for Galvanised Iron (GI) Pipe |
| NS: 408-2054 (1997) | Specification for Road Marking Paint |
| NS 163&169-2045 | Diameter Tensile strength of a Gabion Wire |
| NS 109-2045 | Traffic Sign & km post |
| NS 112-2042 | Traffic Sign & km post |

**INDIAN PUBLICATIONS & STANDARDS**

IS: 432-1982 Mild steel and medium tensile steel bars and hard-drawn steel wire for concrete reinforcement

| | |
|---|---|
| IS 456-2000 | Code of Practice for plain and reinforced concrete |
| IS: 1079 | Steel plate |
| IS: 1566-1985 | Steel mesh fabric (for concrete reinforcement) |
| IS: 1786-1985 | High strength deformed steel bars and wires for concrete reinforcement |
| IS: 2062-1999 | Steel for general structural purpose |
| IS: 2386 | Method of Test for Aggregates (Parts 1, 3, 4, 5, 7 & 8) |
| IS 2629- 1985 | Hot-Dip Galvanising of Iron and Steel |
| IS: 4031 | Method of T est for Cement, Parts 2,3,5& 6 |
| IS: 5758:1992 | Pre-cast concrete kerbs, channels, edgings and quadrants |
| IS: 6241 | Coating of bitumen retained |

Indian Roads Congress (IRC) Specifications for Road and Bridge Works

IRC: 89 Stone for Pitching/ Revetment on Slopes (Clause 5.5.5.1)

**BRITISH PUBLICATIONS & STANDARDS**

BS: 12 Specification for Portland cement (Requirements for composition, strength, physical and chemical properties of four strength classes.)

BS: 812 Testing Aggregates, Methods for determination of soluble Chloride Content. Part 117

BS: 1707 Specification for hot binder distributors for road surface dressings

BS: 3049 Pedestrian guard rails (metal)

BS: 3148 Methods of test for water for making concrete (including notes on the suitability of water)

BS 5075 Specification for concrete admixtures/workability agents

BS: 6044 Road Paint

BS: 6906 Method of Testing Geotextiles

BS:7263 Part 1:1990, Pre-cast concrete kerbs, channels, edgings and quadrants

Overseas Road Notes (ORN) -published by Overseas Unit, Transport and Road Research Laboratory UK

ORN No 3, "A Guide to Surface Dressing in Tropical and Sub tropical Countries"

ORN No 16, "Road Engineering in Mountainous Regions"

ORN No 31, "A Guide to Structural Design of Bitumen-Surfaced roads in Tropical and Sub-Tropical Countries"

**AMERICAN PUBLICATIONS & STANDARDS (Including ASTM/AASHTO)**

ASTM: D5 Bitumen Penetration of bitumen/(asphalt)

ASTM: D6/D1754 Loss on heating of bitumen/(asphalt)

ASTM: D36 Softening point of bitumen/(asphalt)

ASTM: D92 Flash and fire points of bitumen/(asphalt)

ASTM: D113 Ductility of bitumen/(asphalt)

ASTM: D2026 Standard specification for cutback asphalt (slow curing type)

ASTM: D2027 Standard specification for cutback asphalt (medium curing type)

ASTM: D2028 Standard specification for cutback asphalt (rapid curing type)

ASTM: D402&95 Checking of Solvent content

ASTM D 4632,48 ,4533&4491 - Geotextile

AASHTO T283 Moisture Induce Test

**Asphalt Institute Manuals**

Manual Series No.2 (MS-2) -asphalt concrete hot mix manual Manual Series No.4 (MS-4) - The Asphalt Handbook Manual Series No.14 (MS-14) -asphalt cold mix manual

## Appendix 2: Site

### Laboratory Scope

The Contractor shall provide, calibrate (as necessary) and maintain an adequately equipped site laboratory complete with all utility services, apparatus, fittings and daily consumables to undertake the required testing to assure the quality of the materials and the works.

### Description

The laboratory shall preferably located adjacent to the Engineer's site offices (within 500m) and be constructed and provided with amenities including water supply, electric supply etc. as indicated below:

A floor area of 6m*8m plus an office of size 4m*3m for the Engineer's Material Engineer.A store area of 3m* 3m.A toilet area of 2m*2m.Adjoined separate covered sample storage shed of approximately 3m*3m, and a covered concrete, hardstand for preliminary sample treatment and a covered Parking Space for 4 vehicles.

The laboratory shall be provided with 240 volt, 50 HZ electricity. Lighting and sufficient electrical outlets shall be provided to the satisfaction and approval of the Engineer.

A continuous supply of water with a minimum of two sinks with faucets shall be provided.

The floor of the building shall be concrete suitably sealed and adequate to support operating test equipment without vibration and undue noise.

A minimum of 10 metres of work benches, 900 mm high by 750 mm wide, shall be provided. The work benches shall have tops covered with approved plastic laminate or equivalent , shall contain adjustable shelves and drawers and shall be constructed of concrete / 19 mm plywood. A minimum of 6 metres of cupboards shall be constructed approximately 600 mm above the workbenches. These cupboards shall have a minimum of two 450 mm high shelves approximately 300 mm provide. All cupboards shall be provided with doors.

A minimum of four exhaust fans, three ceiling fans with regulators and three opening windows with blinds.

The laboratory shall be provided with double entrance doors wide enough to unload materials from site vehicles into the laboratory. A minimum clear opening of 2 metres shall be provided.

The laboratory requirements given above make no allowance for office or other accommodation for the Contractor's staff and these must be allowed for as additional space in the laboratory design proposed to the Engineer.

Prior to the construction of the laboratory, the Contractor shall obtain written approval from the Engineer for the proposed construction and arrangement of the laboratory

The site laboratory shall become the property of the Contractor when no longer required by the Engineer unless stated to the contrary elsewhere in the contract.

## Appendix 3: Laboratory Equipment

The following items of laboratory equipment shall be provided in the laboratory, as a minimum, however, this does not relieve the Contractor of his responsibility to equip the laboratory with all equipment needed to perform the full range of tests required by the Specification:

### General

| Item | Description of Equipment | No. |
|---|---|---|
| (i) | Oven - Electrically operated thermostatically controlled, range up to 200°C sensitivity 1°C | 1 |
| (ii) | Balance | |
| | Platform balance 300 kg capacity | 1 |
| | Balance: 20 kg capacity - self indicating type | 1 |
| | Electronic balance 5 kg capacity 0.5 gm accuracy | 2 |
| | Electronic balance of 1,000 gm capacity, accurate to 0.1 gm with a tare correction of not less than 100 gm | 1 |
| (iii) | Water bath - electrically operated and thermostatically controlled with adjustable shelves, sensitivity 1 °C | 1 |
| (iv) | Thermometers | |
| | Mercury in glass 0° to 250°C | 2 |
| | Mercury in steel with 300 mm stem | 2 |
| | Thermometers Glass 0 - 50° C | 2 |
| | Thermometers: Glass wet and dry bulb | 1 |
| (v) | Glassware; containers and small tools including: | |
| | Spatulas - 150 mm blade with wooden handle | 2 |
| | Non vacuum Desiccators (300 mm dia.) | 2 |
| | Aluminium tray 30 x 30 x 7.5 cm | 6 |
| | Aluminium tray 40 x 40 x 7.5 cm | 6 |
| | Aluminium tray 60 x 60 x 7.5 cm | 6 |
| | Aluminium moisture content cans - 75 x 25 mm with lids | 50 |
| | Rubber mallet | 1 |
| | Aggregate Steel scoop 690 x 300 x 100 mm | 1 |
| | Aluminium scoop 125 x 200 x 75 mm | 2 |
| | Steel trowel pointing with 200 mm long blade | 2 |
| | Stainless Steel Bowls 2 litre capacity | 2 |
| | Volumetric flasks - 1,000 cc | 1 |
| | Volumetric flasks - 500 cc | 2 |
| | Volumetric flasks - 250 cc | 2 |
| | Measuring cylinders - 1,000 cc | 3 |
| | Measuring cylinders - 500 cc | 2 |
| | Measuring cylinders - 250 cc | 2 |
| | Beakers with spout - 1,000 cc | 2 |
| | Beakers with spout - 500 cc | 2 |
| | Beakers with spout - 250 cc | 3 |
| | Evaporating dish100 mm dia x 40 mm porcelain | 3 |
| | Verniercallipers - 150 mm | 1 |
| | Steel ruler - 300 mm | 1 |
| | Pairs of Heat resistant Asbestos hand gloves, | 2 |
| | Set of sampling tools all materials | 1 |
| | Set of Crowbar, pick and spade | 2 |
| | Gunny Bags & Plastic Bags | 50 |
| (vi) | Set of 450 mm I. S. sieves - 75, 63, 50,40, 37.5, 31.5, 25, 20,19, | 1 set |
| | 16, 14,13.2, 12.5,10, 9.5, 6.3 and 4.75 mm size with lid , pan and brushes. | |
| | Set of 200 mm I. S. sieves -4.75, 4.0, 2.8, 2.36, 2.0, 1.18 and 600, | 1 set |
| | 425, 300, 150 and 75 microns with lid , pan and brushes. | |
| (viii) | Dynamic Cone Penetrometer equipment complete with two extra cones and two extension rods. | 1 set |
| (ix) | Water Testing kit | 1 set |
| (x) | Organic content Testing kit, First Aid Box | 1 set |

## Soils and Aggregate

| Item | Description of Equipment | No. |
|---|---|---|
| (i) | Sample splitters /.Riffle boxes- 50 mm max. particle size | 1 |
| (ii) | Atterberg Liquid Limit Device with grooving tool and BS gauge | 1 set |
| (iii) | Set equipment for Specific gravity determination of both coarse and fine graded soils, including ancillary glass ware including pyconometers and Guy Lussac type density bottles of capacity 100 ml. | 1 set |
| (iv) | Sand Equivalent test set, complete with graduated plastic cylinder, manual or mechanical shaker and stock solution | 1 set |
| (v) | Compaction Test Equipment including two moulds and both 2.5kg & 4.5kg rammers | 2 sets |
| | Complete field density kits, sand displacement type, with base tray, pouring cylinder suitable and calibrating container for coarse grained soils | 2 sets |
| | Complete field density kits, sand displacement type, with base tray, pouring cylinder and calibrating container suitable for fine grained soils | 2 sets |
| (vi) | Aggregate Impact Value Test apparatus | 1 set |
| (vii) | Los Angeles Abrasion Test apparatus | 1 set |
| (viii) | Flakiness and Elongation Test Gauges | 1 set |
| (ix) | Standard Measures of 30, 15 and 3 litres capacity and standard tamping rod | 1 set |
| (x) | California Bearing Ratio test apparatus CBR, with adequate number of moulds fitted with extension collars, perforated base plates, including swell plates and tripods fitted with dial gauges (25 mm travel, 0.01 mm division). | 1 set |

## Bitumen and Bituminous Mixes

| Item | Description of Equipment | No. |
|---|---|---|
| (i) | Penetrometer with standard needles (automatic or semi automatic) | 1 set |
| (ii) | Brookefield type rotary viscometer with Thermocel | 1 set |
| (iii) | Sample splitters /.Riffle box - 12 mm max. particle size | 1 |
| (iv) | Centrifuge type hand operated bitumen extractor as per ASTM D 2172 of capacity 3000 g complete with 500 filter disks, and solvents | 1 set |
| (v) | Standard spray trays | 24 |
| (vi) | 3m straight edge | 1 |
| (vii) | Camber board and spirit- level | 2 set |

## Load Test for bridge- SP 37 Marshall Stability Test

| Item | Description of Equipment | No. |
|---|---|---|
| (i) | Mould Assembly | 1 set |
| (ii) | Sample Extractor | 1 |
| (iii) | Compaction Pedestal and Hammer | 1 set |
| (iv) | Breaking Head | 1 |
| (v) | Loading Machine including ITS arrangement | 1 |
| (vi) | Flow Meter | 1 |
| (vii) | Oven on Hot Plates | 1 set |
| (viii) | Mixing Apparatus | 1 set |
| (ix) | Water Bath | 1 |
| (x) | Thermometer (Range up to2000C with sensitivity of 2.50C) | 1 |

## Cement and Cement Concrete

| Item | Description of Equipment | No. |
|---|---|---|
| (i) | Vicat apparatus for testing setting times | 1 set |
| (ii) | Slump Test apparatus | 1set |
| (iii) | Standard steel cube moulds 150x150mm for concrete testing | Min 40/sufficient |
| (iv) | Standard steel cube moulds 70.7x70.7mm for mortar testing | |
| (v) | Compression strength testing machine 200tonne capacity | 1 |
| (vi) | Sand Equivalent test set, complete with graduated plastic cylinder, manual or mechanical shaker and stock solution | 1 set |
| (vii) | Curing tank for test cubes - (2 m x 2 m x 0.75 m) | 1 |
| Ix | Flexural Beam Test for Concrete pavement | 1 |
| x | Test Equipment for Admixture | 1 set |

The contractor shall provide necessary technician and manpower to operate the laboratory.

The laboratory equipment shall revert to the Contractor when no longer required by the Engineer.

## Appendix 4 Project Signboard

The Contractor shall provide and erect at the beginning and end of each section of Project road a signboard approx. 2.50 m wide by 1.80 m high with the wording in Nepali or English. It will be an incidental work.

Final details to be agreed with the Engineer (see drawing).

The board is to be made of galvanized steel; the lettering and border are to be in black on yellow background. The lower edge of the board shall be at approx. 1.20 m above adjacent ground and shall be mounted on suitable posts with struts on concrete foundations. The paint to be used shall be sunshine resistant paint.

The Contractor will be responsible for the repair and maintenance of the signboards up to the completion of all construction works.

The Engineer will direct the location and placing of the signboards.

GOVERNMENT OF NEPAL

MINISTRY OF PHYSICAL INFRASTRUCTURE AND TRANSPORT

DEPARTMENT OF ROADS

STRATEGIC ROAD CONNECTIVITY and TRADE IMPROVEMENT PROJECT

IMPROVEMENT OF

NAGDUNGA - NAUBISE ROAD AND BRIDGES

CONTRACT NO. SRCTIP-DOR-W-NNM-ICB-1

| | |
|---|---|
| COMPLETION: | (DATE) |
| CONTRACTOR | (NAME) |
| | (ADDRESS) |
| CONSULTANT: | (NAME) |
| | (ADDRESS) |

**Appendix 5**

**ENVIROMENTAL and SOCIAL MANAGEMENT PLAN (ESMP)**

The ESMP provides a description of the various environment and social management measures and their implementation arrangements during Construction & Operation Phases. The contractors ESMP have to prepare all the required plans before implementation of the sub-project activities and it should follow the legislative measures of Government of Nepal and the Environmental and Social Framework (ESF) of WB.

Referencing to the potential negative impacts of the sub-project as described in Table 1 the identified compensation, mitigation and enhancement measures during the pre-construction stage will be implemented by Project Implementation Unit (PMU) or DoR and by Contractor as follows:

**Pre-construction Activities by Contractor:**
The Contractor after mobilization at the pre-construction stage will be responsible for logistic, counting planning and site preparation to construction. The Contractor activities include review of contract packages for civil works implementation and development of work plan, following to legislative provisions and existing practices. Along with other preparation activities (such as procurement of equipment for road works, etc.), the Contractor will prepare

i. Erosion control plan with bioengineering and reinforcement structures;
ii. A stockpiling and excavation management plan to minimize effect during construction and rehabilitate landscape after construction;
iii. Labour Camp Management Plan in line with LMP;
iv. Code of Conduct for Workers;
v. Occupational Health & Safety (OHS) Plan,
vi. Community Health and Safety Management plan
vii. Water and Waste Management Plan
viii. Pollution Prevention Management Plan
ix. Traffic/ Road Safety Management Plan,
x. Quarry/ Borrow Area Operation and Rehabilitation Plan,
xi. Site Restoration Plans in accordance with GoN and WB' Guideline
xii. Construction Management Plan with Proper Schedule
xiii. Emergency Preparedness Management Plan
xiv. Gender Based Violence (GBV) Action Plan
xv. Project Information Sharing and Communication Plan

The Contractor will be also responsible to identify and select of material resources (quarry and borrow materials, water, sand) and debris disposal locations, based on recommendations of PIU (DoR) as well as planning of traffic diversions and detours during construction time. All prepared plans will be reviewed and approved by PIU (DoR) prior to start of construction works.

Disruption to road traffic and other access routes will be minimized in consultation with local authorities and representatives. Contractor will be responsible to prepare and update traffic management plans prior to the construction activities. Contractor will follow local laws and

regulations as per DoR.

Contractor will comply with IFC Accommodation Guideline 2009 (Workers' accommodation: processes and standards; A guidance note by IFC and the EBRDIFC) for the establishment of constructed related camps for labour and engineers.

Construction Stage Activities by Contractor

Construction stage activities will require careful management of generic and site-specific environmental impacts. They will include (i) Implementation of site-specific mitigation measures as recommended; (ii) Monitoring the quality of environmental parameters along the construction sites (air, noise, water and soil). The Contractor's environmental and Social responsibilities will be prescribed in the Tender Documents and later in documents on the award of the Contract. They would include the need to adhere the social and environmental clauses in the Contract and the measures outlined in the ESMP.

The Contractor will comply with all statutory requirements, environmental and Social regulations and environmental quality standards as stated in the Environment Protection Act, 2019 of GoN, Environment Protect Rules 2020 of GoN; for any work in the community forests (CFs) adhere to the Forest Act, 2019 and rules prescribed by the CFs' authorities, GoN and Nepal environmental guidelines relevant to the project and the updated ESMP. Necessary permissions for contractor personnel to enter community forests must be obtained either from MoFE or from Community Forest User Groups. Similarly, the contractor should follow the guidance of environmental and social standards (ESS) under ESF-2018. Following the ESS, contractors should have to address the following measures as: environmental and social risks, management of labors, resource efficiency and pollution prevention, community health and safety, land acquisition, biodiversity conservation and sustainable management of forest resources, indigenous peoples, conservation and management of cultural heritage and engagement of stakeholders. Contractor shall bear all costs associated with environmental pollution avoidance and environmental mitigation, including clean-up operations, if necessary, within community forest areas.

Following the developed recommendations, the Contractor will employ local labour for the works to the maximum possible extent. No children under age of 14 should be employed and children between 14 and 18 should not be engaged in hazardous works, in compliance with the labour rules in Nepal.

All construction sites will be maintained in clean and safe conditions, providing appropriate facilities for temporary storage of all wastes before transportation and disposal. All generated wastes will be disposed in environmentally acceptable manner, including consideration of the nature and location of disposal sites with least environmental impact. Precautionary measures should be taken, when handling and storing fuels and lubricants, to avoid causing environmental pollution, including establishment of contingency plans for clean up in the case of spillage.

Adequate supply of water for drinking and washing purposes will be provided for all site personnel. Drinking water quality should comply with GoN standards and WHO guideline value. Adequate sanitation facilities shall be provided on all construction sites, contractor's office(s) etc., when established. Disposal from all sanitary systems shall be undertaken to avoid causing environmental

pollution. Wastewater should be routed through suitable sanitary facilities and soak ways, without contaminating either ground or surface water or causing a health risk.

Operation Stage Activities by PIU:

Monitoring and maintenance of the environmental and social attributes will be conducted by PIU (DoR) and Contractor in the manner outlined in the monitoring plan under supervision of the responsible engineer.

i. The proponent will carry out regular maintenance work of road and bridges when and where necessary. Periodic maintenance will be carried out to maintain road clean and safe, especially prior to and post monsoon season.
ii. Length man will be recruited in every kilometer along the new and existing alignment to maintain road clean and maintain roadside drainage in working condition.
iii. The proponent together with other stakeholder such as community forest user groups, forest area office and Division Forest Office will carry out monitoring of plants planted as compensation.
iv. Proponent will maintain and renovate all roadside furniture regularly to provide roadside services and facilities.
v. Proponent will carry out regular monitoring of traffic flow and regular maintenance of traffic signals as well as install CCTV for regular monitoring and will maintain safety along the road alignment.

## Table 1: Contractors ESMP-NNM (first package-Ch-0+000 to 12+260)

| Sn. | Activities/ Issue | Location/s | Impact | Mitigation Measures | Cost | Responsible agency for | | Verification Methods | Verifiable Indicators | Frequency |
|---|---|---|---|---|---|---|---|---|---|---|
| | | | | | | Implementation | Monitoring | | | |
| **Preconstruction Phase (Physical Environment)** | | | | | | | | | | |
| 1. | Review of EMAP | - | - | - | - | DCID-DOR, Construction contractor | DoR, DCID, Construction Supervision Consultant (CSC) GESU-DoR | Review of EMAP prepared by Construction contractor | EMAP prepared by contractors for every package prior to construction | Every month after award of contract |
| 2. | Review of access roads | - | Likely affected during construction | Plan for providing access to locals and immediate impact receptors. | | DCID-DOR, Construction contractor | DoR, DCID, CSC, GESU-DoR | Construction Survey and review of ESIA and RAP. | Plan of access to existing link roads and adjacent settlements mentioned in bidding document. | Every month after award of contract |
| 3. | Erosion control | Identified vulnerable areas and new landslide areas during excavation of new roads | Direct disposal, loss of life and property. | Erosion control measures | | Construction contractor | DoR, DCID, CSC, GESU-DoR | Contractor's construction methodology for the excavation for opening new proposed alignments | Plan for erosion control | Every month |
| 4. | Establishment of camps | Khanikhola | - | - | - | Construction contractor | DoR, DCID, CSC, GESU-DoR | Visit proposed camp sites, observation and photographs | Review ESMP and camp management plan of contractor | Every month |
| 5. | Traffic Management | Naghdhunga(0+000) Naubise (12+260) | - | - | - | Construction contractor | DoR, DCID, CSC, GESU-DoR | Review of Traffic management plan of construction contractor | Traffic management plan prepared by construction contractor in place | Every month |

| | | | | | | | | | | |
|---|---|---|---|---|---|---|---|---|---|---|
| 6. | Waste Management | Low land area, away from the settlement and drinking water source | -Health issue<br>-Pollution<br>-Aesthetics | - Selection of sites<br>-Instruction of labours<br>-Managers training | | Construction contractor | DoR, DCID, CSC, GESU-DoR | Field visit | Grievances from the local people. | Monthly |
| 7. | Environment responsible procurement | - | - | - | - | DOR-DCID, CSC, Construction contractor | DoR, DCID, CSC, GESU-DoR | Review of tender document / BOQ | Ensure all the environment and social requirements are included in tender documents. | Monthly |
| 8. | Orientation to construction contractor to address mitigation measures | In each labour camp site | - | - | - | DOR-DCID, project office, CSC | DoR, DCID, CSC, GESU-DoR | Review of BOQ, kick off meeting, review meetings, construction survey and EMAP from contractor's side | Mitigation measures in BOQ items, and orientation provided to contractors | Once in a month |
| **10.1.2** | **Construction Phase (Physical Environment)** | | | | | | | | | |
| 9. | Relocation of public utilities | 0+000~ 12+260 | Disruption in existing services at local level. | Proper relocation and restoration of all affected utilities by the contractor. | | Construction contractor | DoR-DCID, CSC, GESU-DoR | Site visits and observation | Planning for the relocation, respective authority consulted, acquired approval for shifting | Monthly |
| 10. | Excavation and widening of existing NNM (with standard unit) | 0+000~ 12+260 | Minor change in land use along the existing Naghdunga to Naubise section | Land only within the ROW will be acquired for improvement and upgrading; land acquired temporary will be rehabilitated after completion of construction. Contractor will obey IFC EHS | | Construction contractor | DoR-DCID Construction and Supervision Consultant, GESU | Site visit and observation | Excavation Methodology in place | Monthly |

| | | | | | | | | | | |
|---|---|---|---|---|---|---|---|---|---|---|
| | | | | General Guidelines 2007 and IFC EHS Guideline for Toll Roads 2007. | | | | | | |
| 11. | Excavation of hill slopes | Sisnekhola (Ch :3+250), Khanikhola | Landslides, Slope Destabilization and Soil Erosion | Avoided haphazard excavation of slopes. Benching of slopes and excavation in piece-meal applied along the steep slope area. Management of existing natural drainage. Bioengineering and slope protection work, established engineering structures. Contractor will obey IFC EHS General Guidelines 2007 and IFC EHS Guideline for Toll Roads 2007. | | Construction contractor | DoR-DCID, CSC, GESU | Site visit and observation | Excavation methodology, Slope stability and handling of excavated materials. | Monthly |
| 12. | Disposal of spoil | Low laying area | During site clearance, excavation in slopes estimated approximately 45953.25cu. m. of spoil materials | Excavated spoil and other construction materials disposed at identified spoil disposal site. Haphazard disposal of spoil will be avoided | | Construction contractor | DoR-DCID, Construction and Supervision Consultant, GESU | Site visit, observation, and interview with locals | Identified disposal area; disposal area boundary maintained; landscaping and rehabilitation | Weekly |
| 13. | Disposal of excavated waste including safe disposal hazardous materials | Safe disposal location | Obstruction to natural drainage pattern | Avoided haphazard disposal of spoil. Labour camps will not be established close to natural drainage and avoided direct disposal of any wastes. | | Construction contractor | DoR-DCID, Construction and Supervision Consultant, GESU | Site visit and observation | Haphazard disposal of spoil; disposal practices and plan | Weekly |
| 14. | Disposal chemical wastes, etc. into water bodies. | Safe disposal location | Pollution of water resources | Use water only if ample source of water supply exists within | | Construction contractor | DoR- DCID, Construction and | Site visit, observation and | Test results of water quality parameters. | Weekly site visit and observation/water |

| | | | | | | | | | | |
|---|---|---|---|---|---|---|---|---|---|---|
| | | | | construction area; or buying water required for the construction. Existing water sources and supply system will not be affected. Acquired consent with the locals in order to use available water sources. | | | Supervision Consultant, GESU | test of river water quality | | quality test in every six months. |
| 15. | Operation of borrow pits and quarries | Designated locations as mentioned in ESIA and approved sites | Disturbance to landscape, air and noise, accidents, ponding, increase of sedimentation level etc. with the operation. | Avoided haphazard quarry along the riverbank and hills. Permanent barricade at quarry location for safety, take materials from approved quarry side, established safety signage boards, and installed noise barrier. Prepared borrow pit operation plan and obtained approval from supervision engineers prior to operation of quarry. | | Construction contractor | DoR-DCID, Construction and Supervision Consultant, GESU | Site visit, observation and interview with locals | Borrow pits and quarry site operational plan in place; approval from engineers. | Weekly |
| 16. | Operation of stone crushing | Designated locations as mentioned in ESIA and approved sites | Dust, air and noise. Likely accident. | Avoided establishment of operation near schools and settlements. | - | Construction contractor | DoR, DCID, CSC, GESU | Site visit and observation | Operational Plans in place prior to operation and operated accordingly. | Weekly |
| 17. | Stockpiling and transportation of construction materials | Proposed stock piling area. | Dust emission, washout affect to downhill to the Mahesh Khola, cultivated land, | Stockpile materials covered with tarpaulin, sprinkling of water carried out near and around the stockpile to avoid erosion; proper | | Construction contractor | DoR, DCID, Construction and Supervision Consultant, GESU | Site visit and observation | Grievances and complain from locals; ambient air quality adjacent to storage and | Weekly |

| | | | | | | | | | | |
|---|---|---|---|---|---|---|---|---|---|---|
| | | | and discomfort to locals. | barricade and security guard for the area. | | | | | construction sites. | |
| 18. | Road excavation, construction activities, operation of dump trucks, etc. | Especially at Crusher plant, batching plant sites, School, urban and settlement areas | Air pollution | Avoiding operation of drill machines, excavators, loading and unloading of waste materials during wind. Dust masks available to labour workers, sprinkling of water along the dusty road during road excavation twice a day. Avoided direct disposal of effluent from batching plant. | | Construction contractor | DoR, DCID, Construction and Supervision Consultant, GESU | Site visit and observation | Air quality parameters discussed above. | Quarterly during road width excavation. |
| 19. | Use of chemicals | Campsite, workshops, natural drainage along the alignment. | Land and water pollution. Chemical hazards | Handling chemicals properly. Storage of chemicals 100 meters away from any water sources. Spillage kit in place at the construction site. | | Construction contractor | DoR, DCID, Construction and Supervision Consultant, GESU | Site visit and observation, water quality of Trishuli river and tributaries lab test | List of chemicals, storage, and handling practice. Accident records; spillage of chemicals and surface and ground water contamination | Monthly |
| 20. | Disturbance due to excavation with the widening of existing highway, operation of camps and other activities | School, health posts, hotels, shops, resorts situated all along the highway, settlements | Noise pollution | Barricade of construction area, provided operational schedule to local inhabitants. Monitoring noise level maintained at national standard. | | Construction contractor | DoR-DCID, Construction and Supervision Consultant, GESU | Site visit and observation | Regular monitoring of noise level records. | Monthly |
| 21. | Operation of construction vehicles, excavation etc. | Naubise, Naghdhunga | Accidents, Road safety | Installed safety signage boards, barricades, provide PPEs to all labour workers, managed local traffic avoiding | | Construction contractor | DoR- DCID, Construction and Supervision Consultant, GESU | Site visit and observation | Accident records, safety application and facilities maintained. | Weekly |

| | | | | | | | | | | |
|---|---|---|---|---|---|---|---|---|---|---|
| | | | | disturbances, informed and aware locals, provided on job trainings to labours. | | | | | | |
| 22. | Construction safety of labourer with man/days | at construction sites | Occupational health and safety of labourer and accident | Installed safety signage boards, barricades along the construction sites, provided PPEs to all labour workers, managed local traffic, aware and informed locals, provided on job trainings | Included in BOQ | Construction contractor | DoR, DCID, Construction and Supervision Consultant, GESU | Site visit and observation | Group insurance of worker, all time available of PPEs to workers and engineers. | Weekly |
| 23. | Physical cultural structures | 12+230 | Loss of physical cultural structures | Relocation of physical cultural structures | Included in BOQ | Construction contractor | DoR-DCID, CSC, GESU | Site visit and observation | Rehabilitation of affected physical cultural structures, grievances from locals. | Monthly |
| 24. | Establishment of camps (work camp sites and labor camps) | Sinekhola, Khanikhola | Waste and health hazards, degradation of land, streams and rivers | Prepared camp management plan prior to start of work, provided all required facilities at camp sites which will maintain health and hygiene of labour, installed temporary toilets, supply potable water, etc. | | Construction contractor | DoR-DCID, Construction and Supervision Consultant, GESU | Site visit and observation | Operational Plans in place prior to operation and operated accordingly. | Monthly |
| 25. | Change in land-use | In some location along the alignment | -Impact on agro-production, loss of vegetation and forest | Preservation of topsoil and rehabilitation after construction; re-plantation, selected construction time to avoid severe impact on agriculture | | Construction contractor | DoR-DCID, Construction and Supervision Consultant, GESU | Site visit and observation | Top soil preservation practice and overlaying of top soil during backfilling. | After construction |
| 26. | **Operation and maintenance Phase (NNM: Physical Environment)** | | | | | | | | | |

| | | | | | | | | | | |
|---|---|---|---|---|---|---|---|---|---|---|
| 27. | Instability of the hill slopes | 0+050 to 0+200 | Destabilization of slopes | Bio-engineering and slope protection works | - | Construction contractor | DoR-DCID, Construction and Supervision Consultant, GESU | Site visit and observation | Soil erosion, condition of structures applied for slope stability. | Monthly |
| 28. | Impacts due to Poor Drainage | Natural drainages | Flooding<br>Soil erosion<br>Change in hydrology<br>sedimentation | Proper drainage structures, management of flow, management of garbage and debris | - | Construction contractor during DLP, DOR-DCID, DOR project office | DoR-DCID, Construction and Supervision Consultant, GESU | Site visit and observation | Roadside drainage discharge locations, water-pounding area during rain. | Monthly |
| 29. | Air and Noise Pollution | Along the alignment | Health problem of locals and road users | Installation of traffic signals with no horn, speed control and monitoring, establishment of vehicle emission test facility at Nagdhunga and Mugling. | | Construction contractor, DOR-DCID, project office, | DoR, DCID, Construction and Supervision Consultant, GESU | Site visit and observation | Grievances by locals, number of patient in local health posts, record of death due to air and noise along the alignment. | Monthly |
| 30. | Traffic safety and accident records | Sharp bents, narrow section, especially at urban areas. | Accident frequency, human health, loss of property and assets | Establishment of traffic signals, GPS tracking for speed control for public buses plying the highway. | | Construction contractor, DOR-DCID, project office | DoR-DCID, Construction and Supervision Consultant, GESU | Site visit and observation | Accident records; and grievances registered along the the alignemt. | Monthly |
| 31. | Waste Management | In specified safe location away from settlement and water sources | Waste, health and hygiene to locals and road users. | Waste management, coordination with local municipality. | | Construction contractor, DOR-DCID, project office | DoR, DCID, CSC, GESU Municipality, Ward office | Site visit and observation | Record of blockage of drain due to solid waste; waste disposal practices at local level. | Monthly |
| | **Preconstruction Phase (NNM Biological Environment)** | | | | | | | | | |
| 32. | Tree felling | CF, RF, LF | Loss of trees of different species and vegetation, and change | Compensatory plantation of 10 saplings for each felled tree (4 trees will be felled down); and plantation of additional plans due to use of 0.13 | Included in BOQ/ EIA | Construction contractor DFOs, CFUGs, DoR-DCID | DoR, DCID, Project Construction and Supervision Consultant (CSC) | Site visit, tree markings of affected trees in coordination with concern authority | Compensatory plantation plan is in place prior to felling of affected trees and forest clearance | Prior to construction |

| | | | | | | | | | | |
|---|---|---|---|---|---|---|---|---|---|---|
| | | | | Ha area of forest (1600 plants/Ha with) selection of native trees, establishment of nurseries | | | | | certificate acquired. | |
| | **Construction Phase (NNM Biological Environment)** | | | | | | | | | |
| 33. | Clearing of forest, loss of vegetation and grazing area | Near Subbako Ban GF<br>Satiko Ban CF<br>Near Patale Ban CF and GF<br>Near Naaubise CF | Loss of trees and vegetation, disturbance | Replantation, compensation to the CFUG; providing incentives to use biogas and other alternative sources of energy | | Construction contractor in coordination with CFUG, DFOs and DoR-DCID project office | DoR, DCID, Construction & Supervision Consultant (CSC), GESU-DoR | Site visits and observation | Forest clearance certificate acquired; marking of trees, felling of marked trees only. | During and after construction (quarterly) |
| 34. | Disturbance in wildlife activities | Minimal along the forest areas | Felling of tress | Instructions for workers, control by mangers, awareness and distributed printed materials about rules and regulations | - | Construction contractor, DoR-DCID project office | CSC; DFO, DoR-DCID | Field visits, Review of grievances recorded, observation at campsites. | Grievances received from locals | One time a week |
| 35. | Use of forest products by construction workers | In proximity of labour camps | Loss of forest products and NTFP | Instruction of workers before construction<br>Control from management team<br>Alternative energy sources and food | - | Construction contractor | DoR-DCID, Construction and Supervision Consultant | Observation and interaction with locals | Grievances received from locals; use of fuelwood in campsites and in other construction activities. | Weekly |
| 36. | Minor impacts on fish species | Near new bridges | Loss of species; impoverishment of aquatic habitats | Culverts; avoiding of construction in the fish breeding season; Avoiding pollution of water-courses | - | Construction contractor | DoR, DCID, Construction and Supervision Consultant | Observation and interaction with locals | Grievances received from locals. | Before and after construction |
| | **Operation Phase (NNM Biological Environment)** | | | | | | | | | |
| 37. | Possible extraction of fire-wood and timber | Around settlements due to improved accessibility | Loss of forest species and NTFPs | Engagement of CFUGs in forest management; awareness materials; regular control of the | - | Construction contractor, CSC, DFO, CFUGs, DoR-DCID | DoR-DCID; GESU-DoR, DFO | Observation and interaction with locals and affected people. | Use of fuelwoods by locals nearby; Produced and distributed | After construction |

| | | | | | | | | | | |
|---|---|---|---|---|---|---|---|---|---|---|
| | | | | area; alternative sources of energy | | | | | awareness materials | |
| | **Preconstruction Phase (NNM Socio-economic and Cultural Environment)** | | | | | | | | | |
| 38. | Grievance raised by locals and workers | Camp site | Delay of construction or hampering of work | Grievance readdress mechanism; community consultation; | - | DoR-DCID, project office, CSC, construction contractor | DoR-DCID, GESU | Minutes of meetings; number of grievance applications | GRC in place | Responding to applications weekly |
| | **Construction Phase (NNM Socio-economic and Cultural Environment)** | | | | | | | | | |
| 39. | Destruction and damage of community structures and cultural monuments | 12+230 | | Replacement and restore of structures | | Construction contractor, DoR-DCID project office | DoR-DCID, GESU | Field visits and assessment | Relocation status and condition | During construction |
| 40. | Livelihood issues | Camp site and nearby areas | | Replacement and providing specific area for businesses | | DoR-DCID, project office, CSC, construction contractor | DoR, DCID, GESU | Field visits, interview and verification | Livelihood of affected people and living standard | During construction |
| 41. | Conflict with nearby host community | Camp site and nearby areas | Disputes in community, social disorder | Security, instruction of construction workers, supervising and control by management team | | Construction contractor | DoR-DCID, GESU | Protocols of each event | Grievance records, records of conflict and develop code of conduct | During construction |
| 42. | Gender based violence and human trafficking | Camp site and nearby areas | | Awareness about the situation to contractor workers, special instructions | | DoR-DCID project office, Construction and Supervision Consultant, construction contractor | DoR-DCID, GESU | RAP, minutes of community meeting | records of conflict, develop code of conduct | During construction |
| 43. | HIV/AIDS and other diseases | Camp site and nearby areas | Human health, safety and community | Awareness program, instructions relevant to water and waste management, frequent health check of camp | | DoR-DCID project office and construction contractor | DoR-DCID, GESU | Number of awareness programs and events | Regular health checkup records of workers and engineers. | Once in every Six month. |

| | | | | | | | | | | |
|---|---|---|---|---|---|---|---|---|---|---|
| | **Operation Phase (NNM Socio-economic and Cultural Environment)** | | | | | | | | | |
| 44. | Ribbon development, settlement and market places | Along the road | Pressure in community infra-structure, safety | Planning of new economic initiatives for local communities (service centres, etc.) | | Local government, DoR-DCID | DoR-DCID, GESU | Proper planning | Development of shops and market places. | After construction |
| 45. | Increase in accidents | In major junctions, share bents, narrow sections of the road | Safety and health, loss of assets | Regulations, awareness and road infrastructure (lights, signs, zebra, etc.) and adaptive management | | DoR-DCID, division road office | DoR-DCID, division road office, traffic police | Accident monitoring database | Accident records with police authority, Greivances etc. | After construction |
| 46. | Trafficking | Along the road especially at urban areas along the road | Human health, well-being, violence, accidents | Awareness campaigns, creation of jobs for girls and women, vocational training for women, etc. | | Municipality and central government | NGOs, clubs, women groups | Number of campaigns and awareness programs, etc. | | After construction |

## Annex 6

## Terms and Condition for Supervisor and Length-workers:

1. Length workers and supervisors will carry out Routine maintenance of Road ( Activities are Cutting grass, Cleaning drain and culverts, Minor reshaping of unlined drain, Sweeping road, cleaning minor slide, Cleaning of road furniture, cleaning of bridges). Normally there is one Lengthworker in 3 Km stretch and one Supervisor in 15 Km stretch.
2. Working hour of length worker and supervisors shall be 8 hours except for the period from 01 November to 31 January. For the period from the 01 November to 31 January the working hour shall be 7 hours per day.
3. The Length workers and Supervisors salary will be paid monthly. In addition to monthly salary Length-workers and Supervisors are entitled to get festival allowance equivalent to one-month salary per year. For the current fiscal year ( 2021/022), the salary of Length worker and Supervisors is NPR 21,440.00 and 23,960.00 per month respectively.
4. The contractor shall provide required working tools and safety facility (Working Jacket , Helmet, Rubber Boots, Working Gloves, Wheel Barrow, Shovel , Pick ,Sickle Grass Slasher, Broom Stick etc. )
5. Length-workers and Supervisors will get one day leave per week and additional 6 days leave in a year.
6. The Length-workers and Supervisors are entitled to get First Aid medical facility as required.
7. The length workers and supervisors maybe terminated in the following conditions :
    a) If length worker or supervisors are absent for continuous 5 days without prior notice.
    b) If length worker or supervisor is physically unhealthy to work.
    c) If work performance is not satisfactory even after warning third time.

# SECTION-VI

# Bill of Quantities

Notes for Unit Rate Contracts :
Objectives
The objectives of the Bill of Quantities are
(a) to provide sufficient information on the quantities of Works to be performed to enable Bids to be prepared efficiently and accurately; and
(b) when a Contract has been entered into, to provide a priced Bill of Quantities for use in the periodic valuation of Works executed.

In order to attain these objectives, Works should be itemized in the Bill of Quantities in sufficient detail to distinguish between the different classes of Works, or between Works of the same nature carried out in different locations or in other circumstances which may give rise to different considerations of cost. Consistent with these requirements, the layout and content of the Bill of Quantities should be as simple and brief as possible.
Content
The Bill of Quantities should be divided generally into the following sections:
(a) Preamble;
(b) Work Items (grouped into parts);
(c) Day works Schedule;
d) Provisional Sums; and
(d) Summary.

Preamble
The Preamble should indicate the inclusiveness of the unit prices, and should state the methods of measurement which have been adopted in the preparation of the Bill of Quantities and which are to be used for the measurement of any part of the works.

Work Items
The items in the Bill of Quantities should be grouped into sections to distinguish between those parts of the Works which by nature, location, access, timing, or any other special characteristics may give rise to different methods of construction, or phasing of the Works, or considerations of cost. General items common to all parts of the works may be grouped as a separate section in the Bill of Quantities.
Day work Schedule
A Day work Schedule should be included only if the probability of unforeseen work, outside the items included in the Bill of Quantities, is high. To facilitate checking by the Employer of the realism of rates quoted by the Bidders, the Day work Schedule should normally comprise the following:
(a) A list of the various classes of labor, materials, and Constructional Plant for which basic day work rates or prices are to be inserted by the Bidder, together with a statement of the conditions under which the Contractor will be paid for work executed on a day work basis.
(b) Nominal quantities for each item of Day work, to be priced by each Bidder at Day work rates as bid. The rate to be entered by the Bidder against each basic Day work item should include the Contractor's profit, overheads, supervision, and other charges.
Provisional Sums
A general provision for physical contingencies (quantity overruns) may be made by including a provisional sum in the Summary Bill of Quantities. Similarly, a contingency allowance for possible price increases should be provided as a provisional sum in the Summary Bill of Quantities. The inclusion of such provisional sums often facilitates budgetary approval by avoiding the need to request periodic supplementary approvals as the future need arises. Where such provisional sums or contingency allowances are used, the Contract Data should state the manner in which they will be used, and under whose authority (usually the Project Manager's).

Summary
The Summary should contain a tabulation of the separate parts of the Bill of Quantities carried forward, with provisional sums for Day work, for physical (quantity) contingencies, and for price contingencies (upward price adjustment) where applicable.

These Notes for Preparing Specifications are intended only as information for the Employer or the person drafting the Bidding documents. They should not be included in the final documents.

# Bill of Quantities

## 1 Provisional Sum

Procument Item Details

| SL. No | Item Description | Unit | Quantity | Unit Rate(NPR) | Amount(NPR) |
|---|---|---|---|---|---|
| 1 | Relocation of services including compound wall, religious and community structures etc. [105] | PS | 1.0 | 1.5E7 | 15,000,000.00 |
| 2 | Provision of market shades. [105] | PS | 2.0 | 3000000.0 | 6,000,000.00 |
| 3 | Provision of public passenger shades. [105] | PS | 1.0 | 500000.0 | 500,000.00 |
| 4 | Provision of public utilities and safe guard. [105] | PS | 1.0 | 3000000.0 | 3,000,000.00 |
| 5 | Provision for awareness campaign (HIV Aids, health and safety etc), training on enviromental and social safe guard measures etc. and requring accessories. [105] | PS | 1.0 | 1000000.0 | 1,000,000.00 |
| 6 | Environmental mitigation measures (stabilization of slope, different trainings/awareness, compensatory plantation, afforestation program. [105] | PS | 1.0 | 5000000.0 | 5,000,000.00 |
| 7 | Provision of Public Toilet [105] | PS | 1.0 | 2500000.0 | 2,500,000.00 |
| 8 | Provision for DAAB (for Employer's Portion) | PS | 1.0 | 4.0E7 | 40,000,000.00 |
| 9 | Emergency fund for PBM works and services [3200] | PS | 1.0 | 2.0E7 | 20,000,000.00 |

## 2 Construction work

### 2.1 Road Construction Work

#### 2.1.1 Road Work General Item

Procument Item Details

| SL. No | Item Description | Unit | Quantity | Bidder's Rate (NPR) | Bidder's Rate (in words) | Total Amount (NPR) |
|---|---|---|---|---|---|---|
| 1 | Provision of Insurances as specified in the contract documents. [120] | LS | 1.0 | | | |
| 2 | Provide, operate and maintain Quality control laboratory including equipments, accessories and consumables for both field testing facilities and off-site test with manpower as specified in technical Specifications. [500] | LS | 1.0 | | | |
| 3 | Routine maintenance of the road to keep the road serviceable throughout the Contruction Phase. [109] | Km-mth | 294.24 | | | |
| 4 | Reprofiling, regrading, watering and compaction of existing potholes using river gravel. [2900] | Cum. | 322.0 | | | |
| 5 | Recurrent maintenance of the existing potholes by using Bituminous carpeting including excavation adding base course as required to keep the road serviceable throughout the Construction period. [2900] | Sqm. | 1612.0 | | | |

| Procument Item Details | | | | | | |
|---|---|---|---|---|---|---|
| SL. No | Item Description | Unit | Quantity | Bidder's Rate (NPR) | Bidder's Rate (in words) | Total Amount (NPR) |
| 6 | Provision and installation of Project Signboards as per technical Specifications. [110] | No. | 2.0 | | | |
| 7 | Provide Photographs of the works as per technical Specifications. [116] | Mth. | 24.0 | | | |
| 8 | Prepare and provide video documentation of ( before, during and after) works as per Specifications. [116] | No. | 3.0 | | | |
| 9 | Traffic Management during construction Period as per Specifications and as instructed by the Engineer. [104] | Km | 12.26 | | | |

2.1.2 Site Clearance

| Procument Item Details | | | | | | |
|---|---|---|---|---|---|---|
| SL. No | Item Description | Unit | Quantity | Bidder's Rate (NPR) | Bidder's Rate (in words) | Total Amount (NPR) |
| 1 | Clearing of grass, removing roots, breaking sods, leveling the surface and disposal as per Specifications. [201] | Sqm. | 59572.75 | | | |
| 2 | Felling trees including cutting of trunks and branches, removing the roots, stacking serviceable materials and disposal of unserviceable materials to suitable place all complete as per Specification. (a) Girth 100 mm to 300 mm [201] | Nos. | 220.0 | | | |
| 3 | Felling trees including cutting of trunks and branches, removing the roots, stacking serviceable materials and disposal of unserviceable materials to suitable place all complete as per Specification. (b)Girth 300 mm to 600 mm [201] | Nos. | 121.0 | | | |
| 4 | Felling trees including cutting of trunks and branches, removing the roots, stacking serviceable materials and disposal of unserviceable materials to suitable place all complete as per Specification. (c)Girth above 600 mm [201] | Nos. | 13.0 | | | |
| 5 | Dismantling of structures including stock piling of reuseble material and disposal of materials at appropriate location as instructed by the Engineer, all complete.(i)Stone masonry with cement mortar [202] | Cum. | 12604.98 | | | |
| 6 | Dismantling of structures including stock piling of reuseble material and disposal of materials at appropriate location as instructed by the Engineer, all complete - (ii)Gabion walls [202] | Cum. | 873.0 | | | |
| 7 | Dismantling of structures including stock piling of reuseble material and disposal of materials at appropriate location as instructed by the Engineer, all complete - (iii) Reinforced cement concrete work [202] | Cum. | 883.7 | | | |

| Procument Item Details | | | | | | |
|---|---|---|---|---|---|---|
| SL. No | Item Description | Unit | Quantity | Bidder's Rate (NPR) | Bidder's Rate (in words) | Total Amount (NPR) |
| 8 | Dismantling of structures including stock piling of reuseble material and disposal of materials at appropriate location as instructed by the Engineer, all complete - (iv)W Beam Crash Barrier [202] | Rm | 304.5 | | | |
| 9 | Dismantling of structures including stock piling of reuseble material and disposal of materials at appropriate location as instructed by the Engineer, all complete - (v)Hume Pipe [202] | Rm | 216.0 | | | |
| 10 | Clearance of debris and land slide from road, culverts and side drains including haulage for disposal at approved location as per Specifications and as instructed by the Engineer, all complete. [201] | Cum. | 16590.0 | | | |

2.1.3 Earthworks

| Procument Item Details | | | | | | |
|---|---|---|---|---|---|---|
| SL. No | Item Description | Unit | Quantity | Bidder's Rate (NPR) | Bidder's Rate (in words) | Total Amount (NPR) |
| 1 | Road-way excavation including side drain cutting in all types of soil including Hard Rock with haulage and disposal up to 1 km distance at approved place, all complete as per Drawingss and Technical Specifications. [900] | Cum. | 69396.29 | | | |
| 2 | Formation of embankment including compaction in layers including supply of suitable materials from approved borrow pits, removal of top soil, watering and necessary haulage etc. all complete as per Drawingss and Technical Specifications. [900] | Cum. | 14837.63 | | | |
| 3 | Excavation for structures (Cross drainage, Retaining & off-road structures) in all types of soil including Hard Rock, dewatering and disposal at approved location all complete as per Drawingss and Technical Specifications. [900] | Cum. | 23381.98 | | | |
| 4 | Backfilling to structures, foundation pits etc.with suitable material including compaction, all complete as per Drawingss and Technical Specifications. [900] | Cum. | 15684.9 | | | |

2.1.4 Pavement Works

| Procument Item Details | | | | | | |
|---|---|---|---|---|---|---|
| SL. No | Item Description | Unit | Quantity | Bidder's Rate (NPR) | Bidder's Rate (in words) | Total Amount (NPR) |
| 1 | Subgrade Works-<br>(a) Dismantling of flexible pavements (Bituminous Courses) and disposal of dismantled Material up to a lead of 1000 metres, stacking serviceable and unserviceable Material separately all complete. [202] | Cum. | 10408.67 | | | |

| Procument Item Details | | | | | | |
|---|---|---|---|---|---|---|
| SL. No | Item Description | Unit | Quantity | Bidder's Rate (NPR) | Bidder's Rate (in words) | Total Amount (NPR) |
| 2 | Subgrade Works-<br>(b) Dismantling of base /sub base (partially) layer , transportation, stacking serviceable and unserviceable Material separately, (to reuse for Preparation of new sub base) all complete as per Specification. [202] | Cum. | 22018.35 | | | |
| 3 | Subgrade Works-<br>(c) Dismantling of Cement Concrete Pavement and disposal of dismantled Material up to a lead of 1000 metres all complete. [202] | Cum. | 1080.0 | | | |
| 4 | Subgrade Works-<br>(d) Preparation of sub-grade to design grade and camber including watering and compaction in all types of soil, all complete. [1003] | sqm. | 142693.27 | | | |
| 5 | Subbase and Base Work - (a) Preparation of sub base on existing pavement width with the reuse of scarified Base/Subbase including transportation, mixing, leveling, watering and compaction on existing pavement width all complete as per the Specification. [1201] | Sqm. | 73394.5 | | | |
| 6 | Subbase and Base Work - (b) Transporting, Placing, grading, watering and compacting surplus scarified base/sub-base material as sub-base on new pavement area all complete as per Specification. [1201] | Cum. | 2201.83 | | | |
| 7 | Subbase and Base Work - (c) Supply and place granular subbase on prepared surface, mixing, grading and compacting as per Specifications, all complete. [1201] | Cum. | 11657.91 | | | |
| 8 | Subbase and Base Work - Subbase and Base Work - (d) Supply, place and compact Wet Mix Macadam base as per all complete as per Specifications, . [1208] | Cum. | 35026.4 | | | |
| 9 | Bituminous Surfacing Works -<br>(a)Providing and spraying bituminous Prime coat including cleaning the road surface using wire brushes, brooms, air scrubbing, all complete as per Specification. [1302] | Lit | 129834.75 | | | |
| 10 | Bituminous Surfacing Works -<br>(b)Providing and spraying bituminous tack coat including cutter, air scrubbing, cleaning the road surface using wire, brushes, broom etc. [1302] | Lit | 214769.95 | | | |
| 11 | Bituminous Concrete Surfacing and Overlays-<br>(a) Providing, Laying, Leveling and compaction of Dense graded Bituminous Macadam as per the approved design. [1308] | Cum. | 22647.33 | | | |
| 12 | Bituminous Concrete Surfacing and Overlays-<br>(b)Providing, Laying, Leveling and compaction of Bituminous Concrete as per the approved design. [1309] | Cum. | 6136.65 | | | |
| 2.1.5 Structure Works | | | | | | |

| Procument Item Details | | | | | | |
|---|---|---|---|---|---|---|
| SL. No | Item Description | Unit | Quantity | Bidder's Rate (NPR) | Bidder's Rate (in words) | Total Amount (NPR) |
| 1 | Providing and placing cement concrete M10 Grade in foundation including compaction, curing, testing etc., all complete as per Drawingss and Technical Specifications or as directed by Engineer. [2000] | Cum. | 861.53 | | | |
| 2 | Providing and Placing cement concrete M15 Grade including compaction, curing, testing all complete as per Drawingss and Technical Specifications or as directed by Engineer. [2000] | Cum. | 3079.0 | | | |
| 3 | Providing and placing cement concrete M25 Grade for superstructures including compaction, curing, testing, all complete as per Drawingss and Technical Specifications. [2000] | Cum. | 261.62 | | | |
| 4 | Providing and placing PreCast reinforced cement concrete M25 Grade for Side Drains (excluding cost of reinforcement and formwork) including compaction, curing, testing, transportation all complete as per Drawingss and Technical Specifications or as directed by Engineer. [2000] | Cum. | 6895.95 | | | |
| 5 | Providing and placing cement concrete M30 Grade for superstructures including compaction, curing, testing, all complete as per Drawingss and Specifications. [2000] | Cum. | 2102.12 | | | |
| 6 | Providing and laying reinforcement ( HYSD) including cutting, bending, binding, fixing in position etc. all complete as per Drawingss and Technical Specifications or as directed by Engineer. [2014] | M.Ton | 759.18 | | | |
| 7 | Supply and assemble of Machine Made mechanically salvaged Gabion and Mattresses produced from double twisted heavy coated GI wire, of hexagonal mesh size 100 mm x 120 mm, with mesh wire 3mm, selvedge wire 3.9mm, lacing wire 2.4mm and supply and filling stone in gabions including transport and fixing of gabions in position, all complete as per Drawingss and Technical Specifications or as directed by Engineer. [2402] | Cum. | 500.0 | | | |
| 8 | Providing and laying Random rubble stone masonry in cement sand mortar MM5 (including using of reuseable stones from dismentaled Gabions and Stone Masonry) for structure work including scaffolding, curing, preparation of mortar,100 mm dia HDP Pipe 2.5Kgf for weep hole etc., all complete as per Drawingss and Technical Specifications or as directed by Engineer: [2607] | Cum. | 17824.77 | | | |

| Procument Item Details | | | | | | |
|---|---|---|---|---|---|---|
| SL. No | Item Description | Unit | Quantity | Bidder's Rate (NPR) | Bidder's Rate (in words) | Total Amount (NPR) |
| 9 | Providing and laying HDPE Pipe of 110 mm dia ( 6 kgf ) for drainage outlet, subsurface drain including perforation and jointing, all complete as per Drawingss and Technical Specifications and as directed by the Engineer. [2414] | Rm. | 2000.0 | | | |
| 10 | Providing, preparing and installing Formwork (Class F2 Finish) and removal after completion for all concrete works as per Drawings and Specifications. [1804] | Sqm. | 65436.34 | | | |
| 11 | Providing , laying and fixing of geotextile (filter fabrics) all complete as per Drawingss and Technical Specifications. [2404] | Sqm. | 7126.5 | | | |
| 12 | Back fill with graded filter materials in layer with necessary watering and compaction all complete as per Drawingss and Technical Specifications. [3110] | Cum. | 9570.35 | | | |
| 13 | Supply and place dry stone packing/soling, Boulder Apron,Dry Pitching all complete as per Drawingss and Technical Specifications. [2416] | Cum. | 254.35 | | | |
| 14 | Supply and place compressible joint filler as per Drawings and Specifications. [3103] | Sqm. | 103.27 | | | |
| 15 | Supply and place tarfelt all complete as per Drawingss and Technical Specifications. [3103] | Sqm. | 97.2 | | | |
| 16 | Providing and laying RCC NP3 hume pipes with or without collars jointed with stiff mixture of cement mortar(1 cement:2 fine sand) including transportation all complete as per Drawingss and Technical Specifications -<br>(a) Hume Pipes (NP3) 1200 mm Dia | Rm | 587.5 | | | |
| 17 | Providing and laying RCC NP3 hume pipes with or without collars jointed with stiff mixture of cement mortar(1 cement:2 fine sand) including transportation all complete as per Drawingss and Technical Specifications -<br>(b)Hume Pipes (NP3) 900 mm Dia | Rm | 90.0 | | | |
| 18 | Providing and laying RCC NP3 hume pipes with or without collars jointed with stiff mixture of cement mortar(1 cement:2 fine sand) including transportation all complete as per Drawingss and Technical Specifications -<br>(c)Hume Pipes (NP3) 600 mm Dia for utility duct at every 1 Km as directed by the Engineer. | Rm | 108.0 | | | |

| Procument Item Details | | | | | | |
|---|---|---|---|---|---|---|
| SL. No | Item Description | Unit | Quantity | Bidder's Rate (NPR) | Bidder's Rate (in words) | Total Amount (NPR) |
| 19 | Transportation (from Nepal Telecom, Kathmandu) and laying of 40mm dia PLHDPE pipe including earthwork excavation, joining (by sockting), backfilling, compaction all complete as per drawing, Specification or as directed by the Engineer. (Excluding cost of PLHDPE pipe, socket which will be provided by Nepal Telecom). [704] | Rm | 36780.0 | | | |

2.1.6 Road Furniture and Traffic Safety Measures

| Procument Item Details | | | | | | |
|---|---|---|---|---|---|---|
| SL. No | Item Description | Unit | Quantity | Bidder's Rate (NPR) | Bidder's Rate (in words) | Total Amount (NPR) |
| 1 | Supply, delivery and erect Traffic sign in place including required size of steel tubes, steel plates, cement concrete, painting, writing and supporting steel angle nut and bolt etc. all complete, as per Drawingss and Technical Specifications or as directed by Engineer-(a) Warning sign post [1501] | No. | 719.0 | | | |
| 2 | Supply, delivery and erect Traffic sign in place including required size of steel tubes, steel plates, cement concrete, painting, writing and supporting steel angle nut and bolt etc. all complete, as per Drawingss and Technical Specifications or as directed by Engineer-(b) Regulatory sign post [1501] | No. | 150.0 | | | |
| 3 | Supply and erect Informative sign Board (Size may vary as per requirment, According to Location w. r.t. Drawings, Technical Specification or as directed by the Engineer) [1502] | No. | 145.0 | | | |
| 4 | Supply and placing Stone Marker (RCC Kilometer post) including excavation, back filling, painting and writing etc. all compete as per Drawingss and Technical Specifications or as directed by Engineer -(a) Standard Kilometer stone. | No. | 10.0 | | | |
| 5 | Supply and placing Stone Marker (RCC Kilometer post) including excavation, back filling, painting and writing etc. all compete as per Drawingss and Technical Specifications or as directed by Engineer -(a)Standard 5th Kilometer stone. | No. | 2.0 | | | |
| 6 | Supplying and fixing in place Precast RCC delineator post with reflective paint including foundation preparation, back filling, painting and erection etc. as per Drawingss and Technical Specifications or as directed by Engineer. [1507] | No. | 243.0 | | | |

| Procument Item Details | | | | | | |
|---|---|---|---|---|---|---|
| SL. No | Item Description | Unit | Quantity | Bidder's Rate (NPR) | Bidder's Rate (in words) | Total Amount (NPR) |
| 7 | Supply and place retro-reflective sticker on steel beam barrier at specified interval as per Drawingss and Technical Specifications or as directed by Engineer. [1500] | Sqm. | 266.0 | | | |
| 8 | Supply and laying Road Marking with hot applied thermoplastic compound (at least 2mm thick) with reflectorizing glass beads on pavement surface as specified in Traffic Sign Manual and as per the Drawingss. [1504] | Sqm. | 4688.82 | | | |
| 9 | Provide and erecting a Double "W" metal beam crash barrier comprising of 3.00 mm thick corrugated sheet metal beam rail, 0.95m above road/ground level, fixed on ISMC series channel vertical post, 150*75*5mm spaced 2m c/c, 2.05m high, 1.1m below ground/road level, all steel parts to be galvanized by hot dip process, all complete as per Drawingss and Technical Specifications or as directed by Engineer. [1511] | Rm. | 6210.0 | | | |
| 10 | Providing and fixing of road stud 100 x 100 mm, die-cast in aluminum, resistant to corrosive effect of salt and grit, fitted with lenses reflectors, installed in concrete or asphaltic surface, all complete as per Drawing, Technical Specifications or as directed by the Engineer. [1505] | No. | 3065.0 | | | |
| 11 | Supplying and errecting Galvanised Steel Truss overhead with all information Boards with painting , writing and supporting steel angle, nut and bolt, etc all Complete as per Drawingss and Technical Specifications or as directed by Engineer. [1502] | No | 2.0 | | | |
| 12 | RCC Crash Barrier-<br>(a) Providing and placing reinforced cement concrete M40 Grade (excluding cost of reinforcement and formwork) including compaction, curing, testing, all complete as per Drawingss and Technical Specifications or as directed by Engineer.[2000] | Cum | 1238.0 | | | |
| 13 | RCC Crash Barrier-(b)Providing and laying reinforcement (HYSD) including cutting, bending, binding, fixing in position etc. all complete as per Drawingss and Technical Specifications or as directed by Engineer.[2014] | M.ton | 126.6 | | | |
| 14 | RCC Crash Barrier-(c)Providing, preparing and installing Formwork (Class F3 Finish) and removal after completion for all concrete works as per Drawings and Specifications. [1804] | Sqm | 3459.0 | | | |

| Procument Item Details | | | | | | |
|---|---|---|---|---|---|---|
| SL. No | Item Description | Unit | Quantity | Bidder's Rate (NPR) | Bidder's Rate (in words) | Total Amount (NPR) |
| 15 | RCC Crash Barrier-(d)Providing and Painting two coats after filling the surface with synthetic enamel paint in all shades on concrete / plaster surfaces as per Drawing and Technical Specifications. [1501] | Sqm | 1727.0 | | | |
| 16 | Providing and laying M20 Grade precast concrete Kerbs stone (325cmX165cm ) fixing with 1:3 cement sand mortar in joints and 5cm thick M15 Grade PCC on bed for levelling including excavation, backfilling, painting, erection all complete as per Drawingss and Specificationss.[1401] | RM | 5619.6 | | | |
| 17 | Providing and laying 60 mm thick factory made cement concrete interlocking paver block of M-30 grade made by block making machine with strong vibratory compaction, of approved size, design & shape, laid in required colour and pattern over and including 30 mm thick compacted bed of coarse sand, 200 mm GSB, filling the joints with fine sand etc. all complete as per the direction of the Engineer.[1402] | Sqm. | 9003.97 | | | |
| 18 | Providing and erecting 50 mm dia GI pipe (medium) railing in 3 rows on precast M 20 grade RCC vertical posts (0.20x0.20x1.8 m size) 1.2 m above GL with 3 holes 50 mm dia for pipe fixed at 2m center to center as per Specifications and Drawings or as directed by the Engineer, all complete (including excavation, RCC post, GI Pipe etc) [3105] | Rm | 800.0 | | | |
| 19 | Providing and laying factory made 60mm thick, M30 audio-tactile blocks of approved size, design & shape, laid in required colour and pattern all complete as per the direction of Engineer.[1402] | Sqm. | 476.12 | | | |
| 20 | Supply and place Asphaltic rumble strips (each rumble 0.25 m (w) x .02 m (h)) before mid-block crossings at bazars and schools)[1300] | Sqm. | 13.44 | | | |

2.1.7 Environmental Mitigation (Including Bio-engineering)

| Procument Item Details | | | | | | |
|---|---|---|---|---|---|---|
| SL. No | Item Description | Unit | Quantity | Bidder's Rate (NPR) | Bidder's Rate (in words) | Total Amount (NPR) |
| 1 | Provision of safety clothing and equipment, first Aid/Medical facilities and other safety issues including COVID-19 saftey protocal for labor and contractor's employees including consultant's and employers personnel and visitors, all complete as instructed by the Engineer. [111] | Month | 24.0 | | | |

| Procument Item Details | | | | | | |
|---|---|---|---|---|---|---|
| SL. No | Item Description | Unit | Quantity | Bidder's Rate (NPR) | Bidder's Rate (in words) | Total Amount (NPR) |
| 2 | Provide and establishment of camps, adequate drinking water facility, enviroment friendly cooking facility and toilets for contractor's labors and staffs and Demolish camp site and re-instate the ground in original condition as per Specificationss and Engineers Instruction all complete. [111] | LS | 1.0 | | | |
| 3 | Reinstatement of quarry, crusher plant, bitumen storage and stock pile sites to the original stage at the completion of works as instructed by the Engineer. [111] | LS | 1.0 | | | |
| 4 | Clearance of the pavement and road sides free of construction materials like bitumen, aggregates chips etc after construction as directed by the Engineer. [111] | LS | 1.0 | | | |
| 5 | Haulage of surplus cut materials using machinery beyond 1 km length (extra over item 3.04, 4.01 and 5.01(a) for additional 1 km) in environmentally safe tipping sites as directed by the Engineer, all complete. [111] | Cum.-Km | 50997.75 | | | |
| 6 | Bio-engineering works- (a) Slope preparation for bio-engineering works as per Specifications. [2800] | Sqm. | 15971.0 | | | |
| 7 | Bio-engineering works- (b)Supply and planting rooted grass slips at spacing of 100 mm in row and 250 mm spacing between two rows as per Specifications. [2800] | Sqm. | 15971.0 | | | |
| 8 | Bio-engineering works- (c)Supply and Planting containerized tree and shrub seedlings, including pitting, transplanting, composting and placing tree guards,all complete as per Specifications. [2800] | No. | 3194.0 | | | |
| 9 | Bio-engineering works- (d)Supply and plant Brush layering as per Specifications. [2800] | Rm | 2670.0 | | | |
| 10 | Bio-engineering works- (e)Supply and broadcasting grass seeds @ 25 gms/m2 as per Specifications. [2800] | Sqm. | 500.0 | | | |
| 11 | Bio-engineering works- (f)Supply and planting large bamboos as per Specifications. [2800] | Nos. | 822.0 | | | |
| 12 | Bio-engineering works- (g)Supply and Jute netting work as per Specifications. [2800] | Sqm. | 3950.0 | | | |
| 13 | Bio-engineering works- (h)Supply and sowing shrub (Bhujetro or specified by the Engineer) seeds on all slopes at 25 cm intervals, including digging planting holes to 5 cm depth and covering with soil all complete as per Specification. [2800] | Sqm. | 15970.0 | | | |
| 14 | Bio-engineering works- (i)Construct Bamboo Crib Wall including supply of material all complete [2800] | Rm | 1510.0 | | | |

| Procument Item Details | | | | | | |
|---|---|---|---|---|---|---|
| SL. No | Item Description | Unit | Quantity | Bidder's Rate (NPR) | Bidder's Rate (in words) | Total Amount (NPR) |
| 15 | Bio-engineering works- (j)Supply and laying of live fascines, using live hardwood cuttings of selected species (e.g. assuro, namdi phul, simali) of minimum length placed in bundles to give 4 running meters of cutting per meter of fascine, including backfilling of trench and careful compaction all complete. [2800] | Rm | 2670.0 | | | |
| 16 | Bio-engineering works- (k)Providing and Placing 300mm thick Drystone RIP Rap Drain all complete as per Specifications. [2800] | Sqm. | 284.0 | | | |
| 17 | Bio-engineering works- (l)Providing and laying 30 cm dia heavy zink coated gabion bolsters panels: 70 x 100mm hexagonal mesh wire (10 swg frame and 12 Swg mesh) including Earthwork excavation filling with boulder, back filling all complete as per Drawing and Technical Specifications or as directed by the Engineer. [2800] | Rm | 170.0 | | | |
| 18 | Bio-engineering works- (m)Supply and place Turfing including tranporting, water sprinkling all complete on Junction Islands and embankment as per Specifications. [2800] | Sqm. | 1895.18 | | | |

2.1.8 Dayworks

| Procument Item Details | | | | | | |
|---|---|---|---|---|---|---|
| SL. No | Item Description | Unit | Quantity | Bidder's Rate (NPR) | Bidder's Rate (in words) | Total Amount (NPR) |
| 1 | Labour -(a) Skilled labour (Mason, Carpenter, mechanics etc.) | md | 25.0 | | | |
| 2 | Labour -(b)Unskilled labour (Including Unskilled, helpers, assistant operators etc.) | md | 150.0 | | | |
| 3 | Equipment-(a) Tipper Truck 5 Cum. Capacity | hr | 20.0 | | | |
| 4 | Equipment-(b)Loader, 1-1.5 Cum. Capacity | hr | 20.0 | | | |
| 5 | Equipment-(c)Excavator - 0.75 Cum. Capacity | hr | 20.0 | | | |
| 6 | Equipment-(d)Plate Vibrator | hr | 20.0 | | | |
| 7 | Material- (a) Concrete NP3 Pipe 600mm dia. all complete [700] | m | 15.0 | | | |
| 8 | Material- (b)Concrete NP3 Pipe 900mm dia. all complete [700] | m | 15.0 | | | |
| 9 | Material- (c)Stone | Cum. | 200.0 | | | |

| Procument Item Details | | | | | | |
|---|---|---|---|---|---|---|
| SL. No | Item Description | Unit | Quantity | Bidder's Rate (NPR) | Bidder's Rate (in words) | Total Amount (NPR) |
| 10 | Material- (d)Cement | MT. | 2.0 | | | |
| 11 | Material- (e)Sand | Cum. | 5.0 | | | |
| 12 | Material- (f)Supply of gabion crates of various sizes including binding wire, all complete. [634] | Sqm. | 825.0 | | | |

2.1.9 Geo-synthetic and Reinforced Wall

| Procument Item Details | | | | | | |
|---|---|---|---|---|---|---|
| SL. No | Item Description | Unit | Quantity | Bidder's Rate (NPR) | Bidder's Rate (in words) | Total Amount (NPR) |
| 1 | Supply and laying of high strength flexible geogrids as primary reinforcement for geogrid reinforced earth wall with different ultimate tensile strength- (a) Ultimate tensile strength= 100 KN/m [2400] | Sqm | 4309.51 | | | |
| 2 | Supply and laying of high strength flexible geogrids as primary reinforcement for geogrid reinforced earth wall with different ultimate tensile strength-(b) Ultimate tensile strength= 150 KN/m. [2400] | Sqm | 6261.15 | | | |
| 3 | Supply and laying of high strength flexible geogrids as primary reinforcement for geogrid reinforced earth wall with different ultimate tensile strength. -(c)Ultimate tensile strength= 200 KN/m[2400] | Sqm | 1951.64 | | | |
| 4 | Granular filling in geogrid reinforced earthwall including compaction, all complete as per Specifications. [900, 3110] | Cum | 4582.0 | | | |
| 5 | Supply of Facing units with gabion facia units of mechanically woven double twisted hexagonal mesh, mesh type 10 X 12, zinc+pvc coated steel wiremesh with mechanical selvedging and using the integrated mesh extension for 2m as secondary reinforcement with gabion box size 1m X 2m X 0.5m and filling with stones as per Specifications. [2402] | Nos. | 780.0 | | | |
| 6 | Providing, laying and fixing of Geo-textile (filter fabrics), as per design Drawings and Specifications all complete. [2404] | Sqm | 1560.0 | | | |
| 7 | Providing and placing plain cement concrete M15 in foundation, and toe drain including compaction, curing, testing etc all complete as per Drawings and Specifications. [2000] | Cum | 110.0 | | | |
| 8 | Providing and laying 6 Kgf HDPE Pipe of 150mm dia for longitudinal and transverse drainage outlet, etc. including perforation and jointing all complete as per Drawings and Specifications. [2414] | Rm | 134.6 | | | |
| 9 | Providing, laying drainage geocomposite as per Drawings and Specifications. [2400] | Sqm | 800.0 | | | |

| 2.1.10 Perfomance Based Maintenance | | | | | | |
|---|---|---|---|---|---|---|
| Procument Item Details | | | | | | |
| SL. No | Item Description | Unit | Quantity | Bidder's Rate (NPR) | Bidder's Rate (in words) | Total Amount (NPR) |
| 1 | Performance based maintenance works including all the activitis as per the Specifications (except the emergency works) [3200] | Km-month | 735.6 | | | |

| 2.2 Bridge Construction Work | | | | | | |
|---|---|---|---|---|---|---|
| 2.2.1 FOUNDATION AND SUBSTRUCTURE | | | | | | |
| Procument Item Details | | | | | | |
| SL. No | Item Description | Unit | Quantity | Bidder's Rate (NPR) | Bidder's Rate (in words) | Total Amount (NPR) |
| 1 | FOUNDATION WORKS- (a)Excavation for foundation through all types of soil and Hard Rock including relevant lift, disposal and dewatering all complete as per Drawings and technical Specifications. [900] | Cum | 6917.27 | | | |
| 2 | FOUNDATION WORKS- (b)Providing and placing machine mixed cement concrete for leveling course under the bridge structure including compaction, curing, testing and lead etc. all complete but excluding reinforcement and Formwork as per Drawingss and Technical Specification-M-10 Grade [2000] | Cum | 64.62 | | | |
| 3 | FOUNDATION WORKS- (c)Providing and placing machine mixed cement concrete for leveling course under the bridge structure including compaction, curing, testing and lead etc. all complete but excluding reinforcement and Formwork as per Drawingss and Technical Specification.- M-15 Grade [2000] | Cum | 196.25 | | | |
| 4 | FOUNDATION WORKS- (d)Providing and placing machine mixed Reinforced cement concrete M-30 Grade in foundation complete including compaction, curing, testing and lead (excluding cost of reinforcement and formwork) as per Drawing and Technical Specification. [2000] | Cum | 495.28 | | | |
| 5 | FOUNDATION WORKS- (e)Providing and Fixing in position Fe 500D grade reinforcement bar in foundation including cutting, bending, placing in position complete as per Drawingss and Technical Specifications or as directed by Engineer. [2014] | M.Ton | 59.43 | | | |
| 6 | FOUNDATION WORKS- (f)Providing, preparing and installing formwork (Class F1) of foundation including necessary supports, scaffolding etc and removing after completion. [1800] | Sqm | 182.82 | | | |

| Procument Item Details | | | | | | |
|---|---|---|---|---|---|---|
| SL. No | Item Description | Unit | Quantity | Bidder's Rate (NPR) | Bidder's Rate (in words) | Total Amount (NPR) |
| 7 | SUB-STRUCTURAL WORKS- (a) Providing and placing machine mixed Reinforced cement concrete in Substructure complete including compaction, curing, testing and lead (excluding cost of reinforcement and formwork) as per Drawing and Technical Specification.M-30 Grade [2000] | Cum. | 1091.2 | | | |
| 8 | SUB-STRUCTURAL WORKS- (b)Providing and placing machine mixed Reinforced cement concrete in Substructure complete including compaction, curing, testing and lead (excluding cost of reinforcement and formwork) as per Drawing and Technical Specification.M-40 Grade [2000] | Cum. | 7.66 | | | |
| 9 | SUB-STRUCTURAL WORKS- (c)Providing, preparing and installing formwork (Class F2) of Substructure including necessary supports, scaffolding etc and removing after completion as per Drawings and Specifications.[1800] | Sqm | 3028.08 | | | |
| 10 | SUB-STRUCTURAL WORKS- (d)Providing and Fixing in position Fe 500D grade reinforcement bar in Substructure including cutting, bending, placing in position complete as per Drawingss and Technical Specifications or as directed by Engineer.[2014] | M.Ton | 142.85 | | | |
| 11 | SUB-STRUCTURAL WORKS- (e)Backfilling by common material including supply of material, compaction all complete as per Drawings and Technical Specifications.[900] | Cum | 3904.37 | | | |
| 12 | SUB-STRUCTURAL WORKS- (f)Backfilling by granular filter materials behind abutments including supplying of material, compaction all complete as per Drawings and Technical Specifications.[3110] | Cum | 594.39 | | | |

2.2.2 SUPER STRUCTURE

| Procument Item Details | | | | | | |
|---|---|---|---|---|---|---|
| SL. No | Item Description | Unit | Quantity | Bidder's Rate (NPR) | Bidder's Rate (in words) | Total Amount (NPR) |
| 1 | Providing and placing machine mixed Reinforced cement concrete M-35 Grade in Superstructure,deck slab, beams etc. complete including compaction, curing, testing and lead (excluding cost of reinforcement and formwork) as per Drawing and Technical Specification. [2000] | Cum | 304.6 | | | |
| 2 | Providing, preparing and installing formwork (Class F2) for slab, beams, parapet, railing posts etc. of superstructure and removing after completion all complete as per Specificationss. [1800] | Sqm | 1554.02 | | | |

| Procument Item Details | | | | | | |
|---|---|---|---|---|---|---|
| SL. No | Item Description | Unit | Quantity | Bidder's Rate (NPR) | Bidder's Rate (in words) | Total Amount (NPR) |
| 3 | Providing and assembling in position staging/falsework for the construction of RCC superstrcture and removing after completion including design & Drawingss as per Specifications. [1800] | Sqm | 556.92 | | | |
| 4 | Providing and Fixing in position Fe 500D grade reinforcement bar in Superstructure including cutting, bending, placing in position complete as per Drawingss and Technical Specifications or as directed by Engineer. [2014] | M.Ton | 45.04 | | | |
| 5 | Providing and installing PoT PTFE bearing including all necessary axillary and incidental works etc. complete as per Drawingss and Technical Specifications.-(a)Free Bearing (152 T Vertical) | Nos | 16.0 | | | |
| 6 | Providing and installing PoT PTFE bearing including all necessary axillary and incidental works etc. complete as per Drawingss and Technical Specifications.-(b) Pin Bearing (250 T Vertical) | Nos | 2.0 | | | |
| 7 | Providing and installing PoT PTFE bearing including all necessary axillary and incidental works etc. complete as per Drawingss and Technical Specifications. | Nos | 2.0 | | | |
| 8 | Providing and installing Strip Seal expansion joints including all necessary axillary and incidental works etc. complete as per Drawingss and Technical Specifications - Metallic Guided (135 T Vertical). | Rm | 47.6 | | | |
| 2.2.3 GENERAL ITEMS | | | | | | |
| Procument Item Details | | | | | | |
| SL. No | Item Description | Unit | Quantity | Bidder's Rate (NPR) | Bidder's Rate (in words) | Total Amount (NPR) |
| 1 | Providing and laying in position 65mm thick wearing course completing of underlayer of mastic asphalt 15mm thick and 2 layers of asphaltic concrete 25mm thick each all complete, as per Drawingss and technical Specificationss. [3104] | Sqm | 620.0 | | | |
| 2 | Providing and fixing in position RCC Railing of M30 Grade complete as per Drawingss and Technical Specifications. [3105] | Rm | 124.0 | | | |
| 3 | Providing and placing machine mixed Reinforced cement concrete M30 Grade in Approach slab, complete including compaction, curing, testing, lead (excluding cost of reinforcement and formwork) as per Drawing and Technical Specification. [3106] | Cum | 49.98 | | | |

| Procument Item Details | | | | | | |
|---|---|---|---|---|---|---|
| SL. No | Item Description | Unit | Quantity | Bidder's Rate (NPR) | Bidder's Rate (in words) | Total Amount (NPR) |
| 4 | Providing and Fixing in position Fe 500D grade reinforcement bar in Superstructure including cutting, bending, placing in position complete as per Drawingss and Technical Specifications or as directed by Engineer. [2014] | M.Ton | 5.0 | | | |
| 5 | Providing, preparing and installing formwork (Class F2) for slab, beams, parapet, railing posts etc. of superstructure and removing after completion. [1800] | Sqm | 36.96 | | | |
| 6 | Providing and fixing in position 100mm dia Gl drainage spout complete as per Drawingss and Technical Specifications. [3107] | Nos | 20.0 | | | |
| 7 | Providing and laying 100 mm dia HDP 2.5 Kgf pipes (for weep holes) in place as per Drawings and Technical Specifications. [3109] | Rm | 158.0 | | | |
| 8 | Providing and fixing in position Reinforced Cement Concrete crash barrier of M40 Grade complete including centring and shuttering and reinforcement all complete, as per Drawingss and Technical Specifications. [1510] | Rm | 124.0 | | | |
| 9 | Providing and laying 300 mm thick stone boulder pitching grouted with cement sand mortar (1:3) on slopes all complete as per Drawingss and Technical Specification . [2416] | Sqm | 313.0 | | | |
| 10 | Providing and laying filter material underneath stone boulder pitching on slopes complete as per Drawingss and Technical Specifications. [3110] | Cum | 11.76 | | | |
| 11 | Supply and install Bridge identification board with Painting of name, number and span arrangement of Bridge including post and plate all complete as per Drawings or direction of the Engineer. [1500] | Nos | 4.0 | | | |
| 12 | Carry out confirmatory bores upto required depths at each foundation location of bridge complete in all respects including SPT and testing as per Technical Specifications. [3000] | RM | 40.0 | | | |
| 13 | Transportion and Launching of Precast Girder in position all complete. [2000] | Per girder | 8.0 | | | |

2.2.4 Bridge-Repair and Rehabilitation

| Procument Item Details | | | | | | |
|---|---|---|---|---|---|---|
| SL. No | Item Description | Unit | Quantity | Bidder's Rate (NPR) | Bidder's Rate (in words) | Total Amount (NPR) |
| 1 | Providing and Fixing in position Fe 500 grade reinforcement bar in Superstructure including cutting, bending, placing in position complete as per Drawingss and Technical Specifications or as directed by Engineer. [2014] | M.Ton | 0.14 | | | |

| Procument Item Details | | | | | | |
|---|---|---|---|---|---|---|
| SL. No | Item Description | Unit | Quantity | Bidder's Rate (NPR) | Bidder's Rate (in words) | Total Amount (NPR) |
| 2 | Repair and replacement of 75 mm thick M-30 Grade Cement Concrete wearing coat all complete as per Drawingss and Technical Specifications complete as per direction of Engineer In-charge. [3104] | Sqm | 198.25 | | | |
| 3 | Repair and replacement of exising RCC handrails by broken railing/panels/parapets and modification of kerb complete in all respect as per direction of Engineer In-Charge. [3105] | Rm | 25.5 | | | |
| 4 | Providing and repairing filler type joint fixed with M30 grade concrete complete as per direction of Engineer In-charge. [3103] | Rm | 26.0 | | | |
| 5 | Cleaning and repairing of existing expansion joints complete as per direction of the Engineer. [1900] | Rm | 26.0 | | | |
| 6 | Repair and replacement of damaged structural part of footpath slab with M-30 Grade of cement concrete complete as per direction of the Engineer. [2703] | Cum | 1.23 | | | |
| 7 | Providing, replacement and installing new Elastomeric bearings for RCC Type Bridge, all complete as per Drawingss, Technical Specifications and as per direction of the Engineer. [1902] | Nos. | 16.0 | | | |

2.2.5 Foot Over Bridge

| Procument Item Details | | | | | | |
|---|---|---|---|---|---|---|
| SL. No | Item Description | Unit | Quantity | Bidder's Rate (NPR) | Bidder's Rate (in words) | Total Amount (NPR) |
| 1 | Excavation for foundation through all types of soil and Hard Rock including relevant lift, disposal and dewatering all complete as per Drawings and technical Specifications. [900] | Cum | 303.0 | | | |
| 2 | Providing and placing machine mixed cement concrete M-15 Grade for leveling course under the bridge structure including compaction, curing, testing and lead etc. all complete but excluding reinforcement and Formwork as per Drawingss and Technical Specifications. [2000] | Cum | 24.0 | | | |
| 3 | Providing and placing machine mixed Reinforced cement concrete M-30 Grade in foundation complete including compaction, curing, testing and lead (excluding cost of reinforcement and formwork) as per Drawing and Technical Specifications. [2000] | Cum | 149.0 | | | |
| 4 | Providing, preparing and installing formwork (Class F1) of foundation including necessary supports, scaffolding etc and removing after completion. [1800] | Sqm | 442.0 | | | |

| Procument Item Details | | | | | | |
|---|---|---|---|---|---|---|
| SL. No | Item Description | Unit | Quantity | Bidder's Rate (NPR) | Bidder's Rate (in words) | Total Amount (NPR) |
| 5 | Providing and laying stone masonry in M7.5 grade cement mortar for masonary Work complete as per Drawings and Technical Specifications. [2600] | Cum | 4.96 | | | |
| 6 | Providing and Fixing in position Fe 500D grade reinforcement bar in foundation including cutting, bending, placing in position complete as per Drawingss and Technical Specifications or as directed by the Engineer. [2014] | M.Ton | 10.73 | | | |
| 7 | Providing , Fabricating , assembling and erecting galvanised structural steel components / elements including nut, bolt, gusset plate, shop Drawingss, facilities for inspection & testing and trial assembling all complete as per Drawings and Specifications. [2200] | M.Ton | 132.0 | | | |

| Total of Procument Items | |
|---|---|
| **Total Item Price** | |
| **VAT** | |
| **Grand Total** | |